SLWT
RISK MANAGEMENT CASE STUDY

NASA Exploration Systems Mission Directorate

Integrated Risk & Knowledge Management Program

David Lengyel

Risk & Knowledge Management Officer

July 2009

Introduction

In this case study you will be provided background material concerning one of NASA's great engineering and management success stories, the Super Lightweight Tank (SLWT). You'll also be provided with first-hand accounts of lessons learned and other important risk management issues in the form of video interviews with NASA subject matter experts that were directly involved with the SLWT project (see Appendix I). For your convenience, a list of relevant acronyms can be found at the end of this document (see Appendix IV).

The learning objective of this case study is to critically examine risk identification and mitigation approaches employed on the SLWT Project as a benchmark for current ESMD design, development and manufacturing activities.

The SLWT program was undertaken, because of the need to reduce weight in the Space Shuttle system to enable greater payload capacity or up-mass. As seen in the adjacent figure, weight management issues are highly relevant today (2009) as engineers and managers endeavor to design the Nation's next generation space systems.

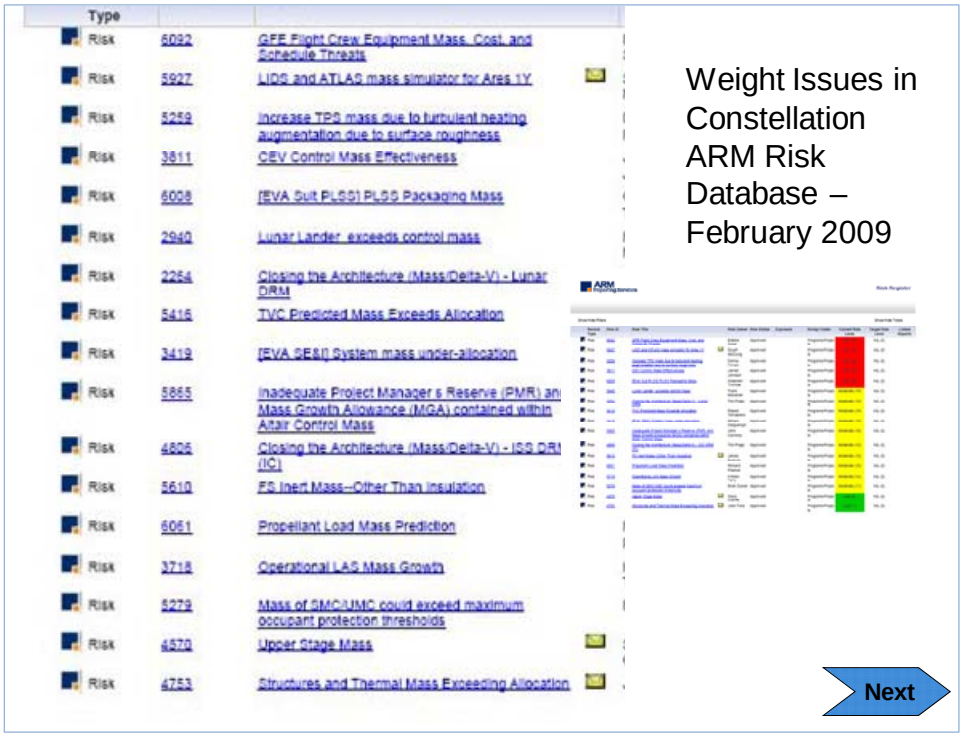

After a series of background videos and a quick review of technical background material you will be placed in the roles of:

- Program Manager, identifying key risks to project success (Exercise 1)
- Materials Engineer controlling and mitigating risks associated with a relatively new (in application) alloy called 2591 Aluminum Lithium (Al-Li) (Exercise 2)
- Industrial/Manufacturing Engineer controlling and mitigating risks associated with the complex welding, machining, and testing of Al-Li (Exercise 3)
- Systems Engineer or Chief Engineer challenged with verifying and certifying the design of the SLWT, a space system that can only be verified by components and analysis – whose first full-up flight test will have a crew of astronauts on-board (Exercise 4)
- Manufacturing/Quality Control Engineer faced with controlling and mitigating risks associated with manufacturer of the SLWT (Exercise 5)
- Safety & Mission Assurance Engineer faced with ensuring the overall safety and fidelity of the entire SLWT design, manufacture, and verification processes. (Exercise 6)

You will be asked to brainstorm ideas (within a small group) and develop a risk control and mitigation plan listing the key elements on the flip chart provided. Of course no one can be expected to be an expert in all of these disciplines.

The good news is that most mitigation measures fall under a higher level set of "things that are viable" to drive down and control risk. A general "Control & Mitigation Guide" for your team discussions includes consideration of:

- Requirements (standards, rules, procedures)
- Planning
- Management Processes
- Control Processes
- Analysis
- Flight Element Testing
- Component Experiments

- Independent (3rd party) technical assistance
- Peer Review

This list will help your team get started in building a Fishbone Diagram that will provide structure for your group discussion. Feel free to develop your own categories then get started discussing specific control and mitigation approaches within each category.

When you are through with the SLWT Case we trust that you will have a renewed appreciation for the:

- Importance of "The Big Brain" – Group Discussion
- Importance of Structured Thinking – Fishbone Diagram
- Importance of Learning from the Past – The SLWT Success Story
- The need for Engineering Humility – Recognizing that you are not as smart as you think you are (Bo Bejmuk)

As a final "thought assignment" you are challenged to substitute "ARES-1" or "Orion" or "J2-X" or "ARES V" or "Lunar Base" into each of the Risk Statements (Exercises 2-6). Does Your Risk Mitigation and Control Plan Stand-Up to SLWT in terms of due diligence?

Historical, Technical Background Material

The New York Times

PANEL URGES SHIFT IN STATION'S ORBIT

By WILLIAM J. BROAD
Published: June 9 , 1993

The expert panel advising the White House on redesigning the space station has called for the proposed astronaut outpost to be launched into a "world orbit" where it could be reached not only by American space shuttles but also by Russian, Japanese, and Chinese rockets.

...

"It would change things in a fundamental way," said Dr. Bruce Murray, a planetary scientist at the California Institute of Technology. "It would say it's not an American space station but an international one. It would say that the Cold War really is over and that we're enthusiastic about going on to the new phase instead of acting like we're trying to prevent time from marching on."

...

Today, winged spaceships soaring out of Cape Canaveral usually fly into an orbit inclined 28.5 degrees to the Equator, a path beyond the reach of the Russians. That orbit was also where the space station, proposed in 1984 amid the Cold War, was to be built piecemeal as the American shuttle fleet carried its numerous parts into space.

...

Now, the 16-member White House advisory panel, headed by Dr. Charles M. Vest, president of the Massachusetts Institute of Technology, has endorsed a higher inclination for the American station in working papers and a draft report for President Clinton.

...

If the station is launched into an orbit the Russians can reach, the white paper said, the United States could "use their entire stable of previously developed Soviet launch vehicles – as needed."

...

Cooperation with Russians could reduce costs, but the paper noted that the station's current international partners, Japan, Canada, and Europe, "generally disagree with us about the desirability of this orbital inclination."

The drawback of the proposed path, it noted, is that shuttles flying to a higher inclination can lift less payload, up to 11,500 pounds less than the craft's top lifting power of 55,000 pounds...

**This excerpt contains pieces of the original article from The New York Times, where ellipses indicate the excluded segments.*

The Commitment to the International Space Station

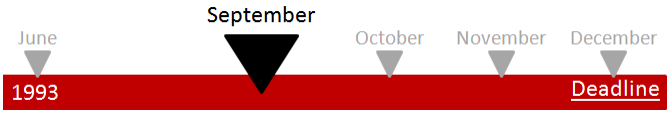

The New York Times report (above) had been published in June of 1993 amidst serious consideration by the U.S. Congress to cancel the almost decade-long program. After a House vote in that same month, the station survived cancellation by only one vote. On

September 2, 1993, in a significant turn of events, representatives from the United States and Russia officially signed the Joint Declaration on Cooperation in Space, paving the way for a massive, unprecedented partnership to complete and operate the space station.

When President Bill Clinton took office in January 1993, he was advised by his budget director to cancel the space station program. The program, then named *Freedom*, had been established in 1984 under the Reagan Administration and was well behind schedule and over budget. The design alone had cost over $11 billion, and not even a single piece of hardware had yet been launched into space. It had been redesigned multiple times, progressively sacrificing capabilities to control ballooning costs. But where others saw failure, NASA Administrator Dan Goldin had convinced President Clinton and Vice President Al Gore to see opportunity. The Clinton Administration had been actively searching for a way to rejuvenate political relations with Russia when Goldin suggested forging a massive space partnership between the two nations by bringing them aboard the space station program. A Russian alliance would not only save billions of dollars and accelerate the time to completion, it would preserve the ability for the United States to access the station during a potential grounding of the Shuttle (as occurred after the Challenger disaster in 1986). President Clinton accepted this proposal and directed NASA to increase the orbital inclination of the space station, now renamed the International Space Station (ISS), to support Russian participation in the largest space collaboration in history.

Increased Lift Capability Needed

The increased lift capability needed for the Space Shuttle to reach the higher orbital inclination of the ISS is now estimated at 13,500 pounds according to the most current calculations from the Space Shuttle Program (SSP) Office, which is 2,000 pounds more than what was predicted back in June. The SSP has no choice but to achieve this lift capability. President Clinton has mandated it, and NASA Administrator Goldin has promised it. Beginning in December 1997, the primary objective of the SSP will be to support the assembly of the ISS. Of the 34 planned primary SSP payloads, 27 will be ISS-related. In order to construct the ISS by the planned 2002 deadline, the 13,500 pounds of lift cannot come from reduced payloads. The Space Shuttle itself must find places to cut mass.

For the Project Manager for the External Tank (ET), this job will not be easy. The SSP has a history of mass reductions that were made to maximize the current payload capacity. Almost every component considered expendable has already been eliminated. The ET Project is already using a second generation ET that was specifically designed to be 12,000 pounds lighter than the original tank (a mass reduction of over 15%). One month from now, all of the Project Managers must propose strategies for mass reduction to the Space Shuttle Program Manager. The other Project Managers of the key Space Shuttle components have started on their

plans. The Orbiter Project Manager says that his team is scraping to find solutions. They cannot simply construct a newer, lighter Orbiter. They must work with their current vehicles. The Orbiter team is actually considering removing contingency consumables, including water, oxygen, and food to save mass. The Solid Rocket Booster Project Manager is considering a redesign of the Solid Rocket Motor (SRM) in order to save mass. But he is uncertain if NASA would be willing to invest in the design and construction of a new Advanced Solid Rocket Motor (ASRM), since the current SRM's are reusable. The ET Project team has also identified a number of optimizations that would reduce mass by a couple hundred pounds. But the ET needs a mass reduction in the thousands of pounds in order to make its "fair" contribution to the mass savings. There is an advantage available to the ET: they are not reusable. A new ET must be produced for every flight anyway, so a significant redesign is a realistic possibility.

The goal is set, and the deadline is fixed. The only problem is how to actually accomplish the mass reduction.

Mass Breakdown: The Space Shuttle Assembly

The Space Shuttle, or Space Transportation System (STS), is comprised of three major components: the Orbiter with three Space Shuttle Main Engines (SSMEs), a pair of Solid Rocket Boosters (SRBs), and the External Tank (ET). The reusable Orbiter carries the crew and the payload. It has three SSMEs for propulsion, but over 80% of the thrust during liftoff is provided by the twin SRBs, which contain solid propellant and are also recoverable so as to reuse the expensive SRMs. The ET serves as the structural backbone of the Space Shuttle assembly, connecting to both the Orbiter and the SRBs (shown in Figure 1). It supplies liquid oxygen and liquid hydrogen fuel to the Orbiter's SSMEs, is physically the largest component of the Space Shuttle assembly, and is the only component that is not reused.

Percentage of Mass at Launch (excluding crew/payload)

	Dry	Wet
ET	11%	38%
SRBs	60%	58%
Orbiter w/ SSMEs	29%	4%

Shuttle	Empty Orbiter	3 SSMEs	Total Empty Shuttle
Columbia	159,343 lb	22,340 lb	181,683 lb
Discovery	153,998 lb	22,318 lb	176,316 lb
Atlantis	154,082 lb	22,323 lb	176,405 lb
Endeavor	153,593 lb	22,399 lb	175,992 lb

** Challenger unavailable by SLWT*

Figure 1: Space Shuttle assembly with approximate weights during the Light Weight Tank (LWT) era, 1983-1998.

During the launch sequence, at about T minus 6 seconds, the SSMEs are activated. They must reach 90% thrust by T minus 3 seconds to proceed with launch. At T minus 0 seconds, the SRBs are ignited. The Space Shuttle assembly, weighing about 4.5 million pounds at launch, is accelerated to 100 mph in eight seconds. The SRBs burn for about two minutes, consuming a combined 2.2 million pounds of propellant over this time. At about 150,000 ft, the empty SRBs are jettisoned from the ET. Each SRB

deploys its own parachute and lands safely in the ocean, where they are recovered. The Orbiter and ET continue to ascend, now powered only by the SSMEs which are fed liquid fuel at a rate of 1,035 gallons per second. About eight and a half minutes after launch, the Orbiter is close to its required 18,000 mph needed to reach orbit and the ET has emptied almost 29 swimming pools worth of liquid fuel (about 1.6 million pounds). At that point, the three SSMEs are shut down. 18 seconds later, the ET is released from the Orbiter. Gaseous oxygen is vented from a valve in the nose of the ET, which induces a self-destructive tumble rate designed to break up the ET over the ocean at just below 250,000 ft (a "safe" debris altitude mandated by international treaties) where most pieces burn up during re-entry.

Overall, more than 80% of the weight of the Space Shuttle assembly at launch is just the fuel needed to lift the Orbiter into space. Mass savings on any component can be directly applied to launch performance or more payload for the Orbiter to carry into space. Therefore, weight, or mass reduction, has always been a top priority since the inception of the space program. Both the Orbiter and the ET are repeated targets for mass reduction efforts because a pound saved translates directly to a pound of payload gained. On the other hand, since the SRBs (while by far the heaviest component) only participate in the first two minutes of launch, it takes 10-11 pounds of savings to gain one pound of payload.

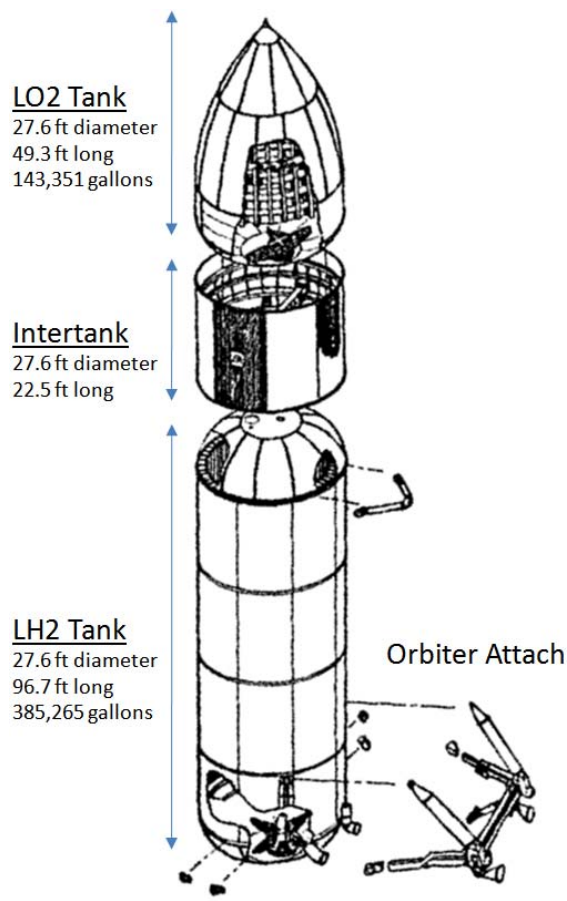

Figure 2: Components of the ET.

External Tank

The 154-ft long External Tank (Figure 2) is comprised of four main components: the Liquid Oxygen (LO2) Tank, Intertank, Liquid Hydrogen (LH2) Tank, and the Thermal Protection Shield (TPS). The LO2 Tank holds about 1.36 million pounds of LO2 at -297 °F. The Intertank joins the LO2 Tank with the LH2 Tank, providing the structural support and load bearing. The LH2 Tank carries about 240,000 pounds of LH2 kept at -423 °F (less than 37 °F from Absolute Zero). The TPS provides about 4,000 lbs of insulation for the ET and also prevents the formation and accumulation of ice on the tank, which as debris poses a catastrophic risk to the Orbiter through tile damage. Approximately 481,450 individual parts go into producing one ET. It contains 38 miles of electrical wiring, 1,000 ft of insulated sleeving, and 4.7 miles of tape. It requires more than 3,000 welds over 0.6 miles to form the aluminum panels into the domes and shapes needed to construct the ET at the Michoud Assembly Facility in New Orleans. The process involves over 100 civil servants from Marshall Space Flight Center (MSFC)

and over 2,500 contractors across multiple teams (primed by Martin Marietta). (Additional facts on the ET are provided in Appendix II.)

The first flight-ready ET (SWT-1) weighed 77,100 pounds dry and flew April 1981 on STS-1. It was also referred to as the Standard Weight Tank (SWT). By STS-3 (which flew less than a year after STS-1), weight saving measures were already going into effect. SWT-3 saved 600 pounds by simply not painting the tank white, leaving its "natural" orange-brown color. SWT-4 saved another 600-700 pounds by eliminating the anti-geyser line used to expedite filling the LO2 Tank. In truth, NASA had never actually stopped looking for weight savings on the ET. In 1979, before even the first Shuttle flight, NASA had already identified the future need for increased payload launch capability for the Galileo mission. NASA returned to Martin Marietta, who designed and constructed the SWT, and commissioned them to build a Light Weight Tank (LWT) to be 6,000 pounds lighter for $45 million. In September 1982 (and one day ahead of schedule), Martin Marietta delivered the LWT for use on STS-6 in April 1983, having reduced over 10,000 pounds for only $43 million. The LWT modifications are summarized in Table 1. The reductions were so successful that the LWT actually included hundreds of pounds of added structural support to the LO2 Tank and aft dome to enhance overall performance.

Table 1:	Light Weight Tank (1983 - 1998) Modifications
Design	Pressurization system redesigned so a single valve failure would no longer raise the pressure above the control band, allowing a thinner LH2 Tank.
	Exterior was no longer painted white.
Materials	7079 Aluminum (Al) upgraded to 7050 Al.
	5-2.5 Titanium (Ti) upgraded to 6-4 Ti.
Functional	Removed anti-geyser line.
Margins	Reduced margins on structural, load bearing parts.
	Instead of using a universal Factor of Safety (FoS) of 1.4, FoS was reduced to 1.25 where possible.

When LWT was delivered, the ET was considered to be about as lean as possible, with only a few hundred pounds of optimization left. But not long afterwards, Martin Marietta produced an unsolicited proposal for an even lighter ET based on a few major redesigns. It was called the Super Light Weight Tank (SLWT). A summary chart of this proposal is shown in Figure 3. The most significant suggestion was the replacement of the traditional aluminum-copper (Al-Cu) alloy with an experimental aluminum-lithium (Al-Li) alloy, observed in laboratory tests to be both lighter and stronger. This single upgrade was predicted to save 4,889 pounds. Second was the use of a novel orthogrid structure in the design of the LH2 Tank panels. The orthogrid is a waffle-like pattern that allows selective reinforcement to specific areas that require more strength while paring down the areas that do not. This would save an additional 2,747 pounds. A Variable Output Proportioning System (VOPS), which modulates the foam spray, combined with TPS machining used to control the thickness of the foam would reduce a final 367 pounds. In total, this amounted to just over 8,000 pounds of proposed weight savings on a new ET. However, at the time Martin Marietta proposed this plan, there was no need for increased launch capability. The Orbiter payload was already at maximum capacity for a Return to Launch Site (RTLS) abort sequence. For this reason, no funds had been authorized to evaluate this proposal in its entirety. The only review conducted was concerning the change in material to Al-Li, in which engineers at MSFC

concluded that the proposed changes were realistically possible. That was years ago, and no additional reviews had occurred since then.

Martin Marietta's Proposal for the Super Light Weight Tank

Part(s)	*(ET-71*)* **LWT**	Proposed Weight-Saving Changes: Al-Li	VOPS	Machined TPS	Orthogrid	*(predicted)* **SLWT**
LO2 Tank	**12,667**	-1,700	-16	--	-75	**10,876**
Intertank	**12,885**	-479	--	-271	-179	**11,956**
LH2 Tank	**29,458**	-2,710	-80	--	-2,493	**24,175**
Other	**10,439**	--	--	--	--	**10,439**
Total Dry Weight	**65,449**	-4,889	-96	-271	-2,747	**57,446**

**Martin Marietta's proposal was based on a predicted ET-71 weight allocation. The actual ET-71 flew at 65,767 lb.*

Figure 3: Proposed weight-savings (in pounds) for each component of the Light Weight Tank's upgrade to the Super Light Weight Tank.

Due to the current needs for mass reduction, the SLWT proposal re-emerged. The proposal alone offers the Space Shuttle more than half of the total mass reduction it needs. At about 2.5 times the cost, the Al-Li (Al 2195) is predicted to be 40% stronger and 10% less dense than the Al-Cu (Al 2219) currently in use. Laboratory tests have also shown Al 2195 to exhibit anisotropic mechanical behavior compared to isotropic Al 2219, meaning that Al 2195 may behave more like a composite at times than a homogenous material. It would put the ratio of the ET structural weight to the weight it carries at about 1:27. The standard weight-to-cargo ratio for a pickup truck is 3:1. Unfortunately, the one materials review performed by MSFC did not involve additional testing. Therefore, the only testing results available are limited to the initial experiments conducted by one of Martin Marietta's research subsidiaries. In 1986, the group had reported the invention of a weldable, cryogenic friendly Al-Li alloy called Weldalite®. Previously, the combination of these two elusive properties was unattainable by Al-Li projects in the United States, which had been abandoned multiple times as far back as 1950. While competing designs were studied by Alcoa, the Russian MIG-29 Fighter program had the most success with Al-Li, opting to scrap any part requiring multiple weld repairs. Leveraging the Russian achievements, Martin Marietta's research program successfully welded a prototype ET "quarter dome" out of three dome gores and chord (which attaches the dome to the barrel) made of Al 2195, one of the formulations of Weldalite®. The MSFC study analyzed these results and concluded that the use of Al-Li to construct the ET seemed possible. This month, the ET Project office had tried to procure samples of this Al 2195 for test material only to find that the production rights had been licensed to Reynolds Aluminum, who has not yet produced any of the material since acquiring the rights to do so. Thus, no samples are available.

Requests for research material concerning the orthogrid portion of the proposal also found limited data available. An orthogrid design (a waffle-like grid) has never been flown on a propellant tank. However, McDonnell Douglas has published some research on similar isogrid designs (a triangular-shaped grid), which they have flown successfully

(see Appendix III). The upgrade from Al 2219 to the higher strength Al 2195 would allow the use of the orthogrid, which has fewer support beams (and thus less weight) than either the current “T stiffener” or isogrid designs. While there are still risks involved with the VOPS and TPS machining processes, both of these techniques are well-understood and the ET team seems unconcerned with any threats to the success of those modifications.

References

- NASA Facts Super Lightweight External Tank (04/2005)
- Independent Annual Review (IAR) for SLWT Program (10/07/1994)
- SLWT Independent Assessment of Risk Management Activities (12/12/1997)
- LWT / SLWT Delivery Option (08/11/1994)
- Release: 96-144 Shuttle Super Lightweight Fuel Tank Completes Test Series (07/18/1996)
- Release: 97-58 Shuttle's New Lighter, Stronger External Tank Completes Major Pressure Tests (03/28/1997)
- Release: 98-6 New Space Shuttle External Tank Ready to Launch Space Station Era (01/15/1998)
- Von Karman Lecture: The Space Shuttle - Some Key Program Decisions (01/12/1984)
- Program Commitment Agreement SLWT (06/30/1994)
- Lessons Learned: From Space Shuttle External Tank Development – A Technical History of the External Tank – (10/30/2002)

Appendix I: About the Video Interviewees

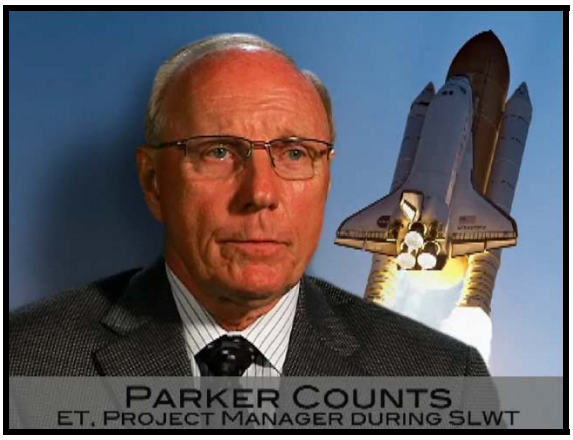

Mr. Counts served as the Project Manager for the External Tank (ET) from 1992-1999. During this time, 51 tanks were expended over various shuttle launches. He managed the development, construction, and delivery of the Super Light Weight Tank (SLWT). He is currently retired from NASA.

Bryan D. O'Connor
Chief, Safety and Mission Assurance

Mr. O'Connor graduated from the United States Naval Academy and began active duty with the United States Marine Corps in June 1968. He went on to receive his Naval Aviator's wings and served as an attack pilot flying the A-4 Skyhawk and the AV-8A Harrier. Later he served as a test pilot with the Naval Air Test Center at Patuxent River, Maryland. O'Connor was selected for the NASA astronaut program in 1980, was pilot on STS-61B in 1985, and then in 1991, he commanded STS-40.

In March 1993 O'Connor was assigned as Director, Space Station Redesign. He and his 50 person team of engineers, managers, and International Partners developed, then recommended substantial vehicle and program restructure strategies which led to the International Space Station Program. In September, he was named Acting Space Station Program Director, and in April 1994, he was assigned as Director, Space

Shuttle Program. After leaving in February 1996 to become an aerospace consultant, O'Connor rejoined NASA in June 2002 as Associate Administrator, Office of Safety and Mission Assurance.

Mr. Pessin joined the space program in 1960 as a propulsion engineer at Marshall Space Flight Center (MSFC). He then spent 8 years as MSFC's mechanical engineering representative to the Michoud Assembly Facility. He returned to MSFC in 1970, where he worked on both the Space Shuttle Main Engines and the Solid Rocket Motor before joining the ET Project office in 1972. He retired from NASA as the Chief Engineer for the ET in December 1997. He has since served as a consultant for United Space Alliance, the Columbia Accident Investigation Board, and Return to Flight.

Brewster H. Shaw, Jr.
Vice President and General Manager, Space Exploration
Integrated Defense Systems, The Boeing Company

Mr. Shaw served 27 years with the U.S. Air Force and NASA. During his government career, Shaw served as combat fighter pilot (F-100 and F-4 aircraft), test pilot and Space Shuttle astronaut and program manager. As an astronaut, Shaw flew three Space Shuttle missions – as pilot of STS-9 in November 1983, as commander of STS-61B in November 1985, and as commander of STS-28 in August 1989.

After leaving government service, Shaw joined Rockwell in 1996 where he held multiple management and executive roles. He went on to serve as the Boeing ISS vice president and general manager, responsible for leading an industry team in designing, developing, testing, launching, and operating NASA's international orbiting laboratory. After that, Shaw served as vice president and deputy general manager for Boeing NASA Systems, before going on to serve as chief operating officer of United Space Alliance, the prime contractor for the Space Shuttle Program.

In January 2006, Shaw was appointed vice president and general manager, Space Exploration, for Integrated Defense Systems at The Boeing Company, where he is responsible for the strategic direction of Boeing's civil space programs and support of NASA programs such as Space Shuttle, International Space Station (ISS), Checkout, Assembly & Payload Processing Services (CAPPS), Constellation and Ares.

Appendix II: ET Facts

Fun facts about the hugeness of the ET …

Fact #1- **External Tanks are manufactured in New Orleans.**

Eight external tanks were at the facility in New Orleans when Hurricane Katrina hit. A team weathered the storm with the tanks battling winds and flood waters, and had to use pumps to keep the facility dry. Following the storm, the facility became a base of operations for Katrina recovery efforts.

Fact #2 – **The Tank was not always rust-colored.**

The first two space shuttle missions, STS-1 and STS-2, were flown with an external tank which was painted white. Subsequent missions flew with unpainted tanks – saving approximately 600 pounds.

Fact #3 – **The tank is as tall as the Statue of Liberty *(without the base)***

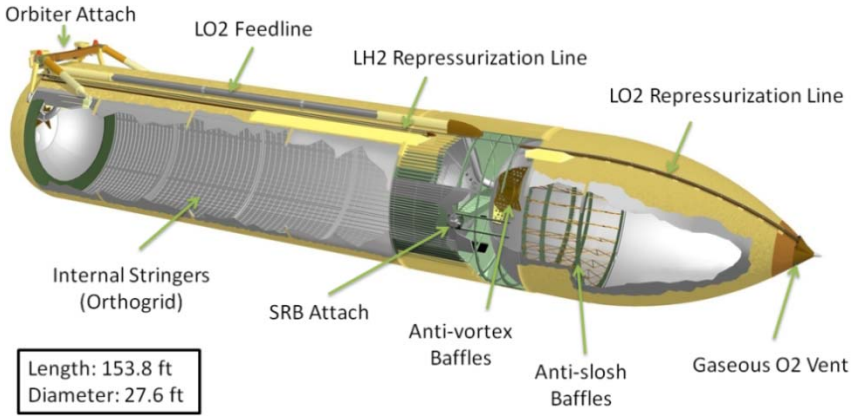

Appendix III: SLWT Orthogrid

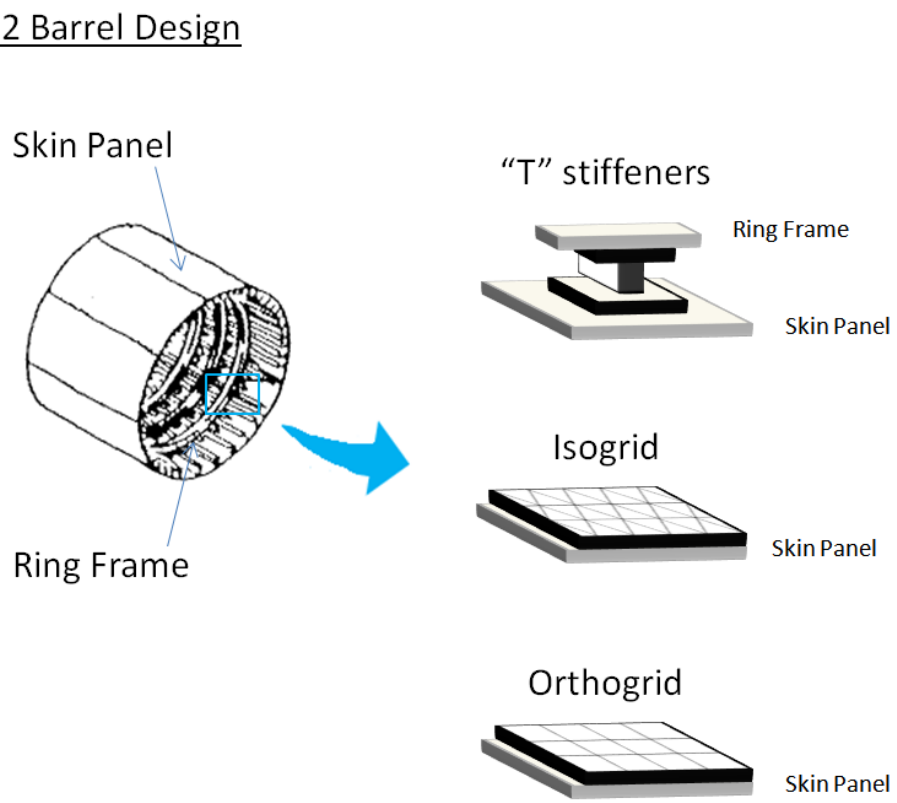

Appendix IV: Acronyms List *(alphabetical order)*

Al	Aluminum
Al 2195	Aluminum-Lithium Alloy used on SLWT
Al 2219	Aluminum-Copper Alloy used on LWT
Al-Cu	Aluminum-Copper Alloy
Al-Li	Aluminum-Lithium Alloy
ASRM	Advanced Solid Rocket Motor
ET	External Tank
FoS	Factor of Safety
ISS	International Space Station
LH2	Liquid Hydrogen
LO2	Liquid Oxygen, a.k.a. LOX
LWT	Light Weight Tank
MRB	Material Review Board
MSFC	Marshall Space Flight Center
NASA	National Aeronautics and Space Administration
RTLS	Return to Launch Site
SLWT	Super Light Weight Tank
SS	Space Shuttle
SSME	Space Shuttle Main Engine
SSP	Space Shuttle Program
SRB	Solid Rocket Booster
STS	Space Transportation System
SWT	Standard Weight Tank
Ti	Titanium
TPS	Thermal Protection Shield
VOPS	Variable Output Proportioning System