Antenna Test Facility (ATF)

User Test Planning Guide

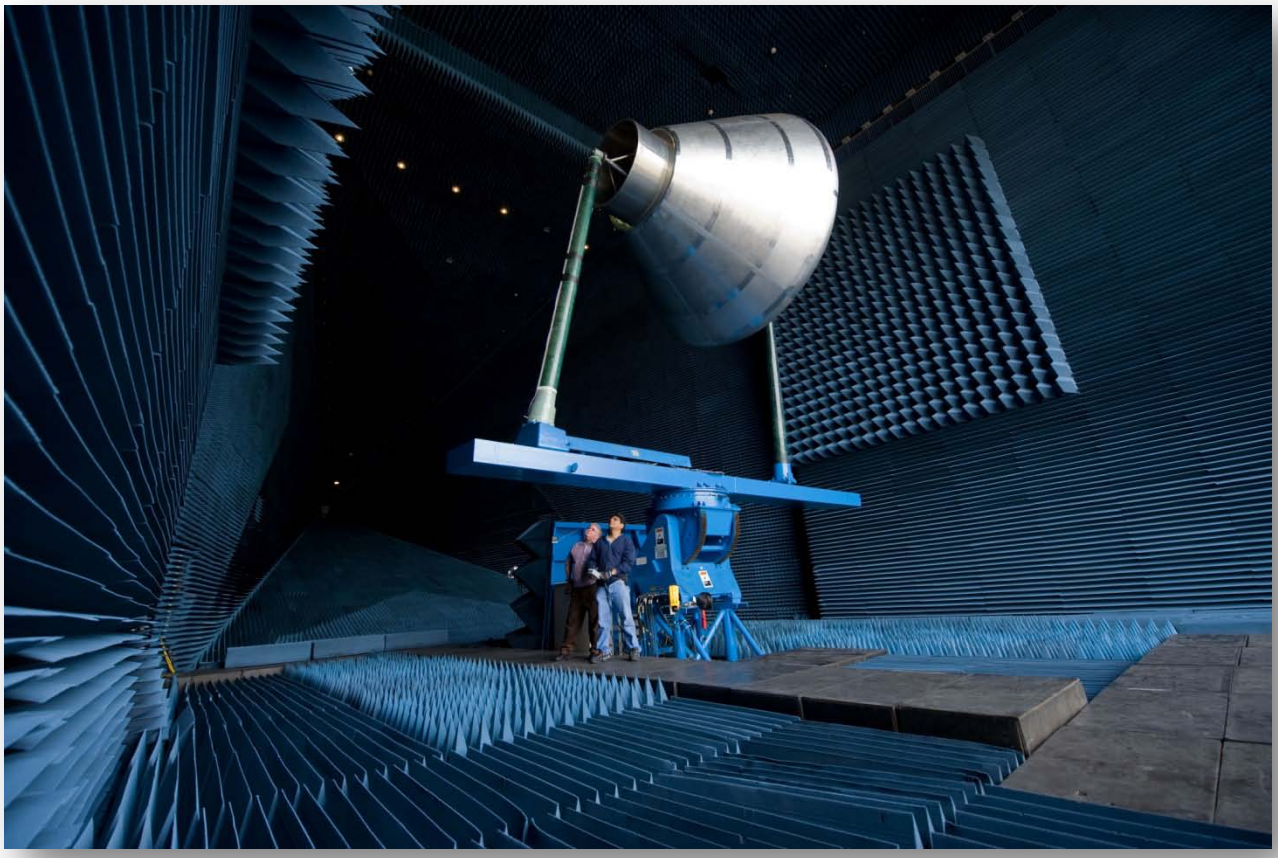

National Aeronautics and Space Administration
Lyndon B. Johnson Space Center
Houston, Texas 77058

Table of Contents

1.0 Antenna Test Facility 3

2.0 Facility Layout 5

3.0 Safety and Health 6

4.0 Test Process Flow 6

4.1. Export Controlled and Proprietary Information 7

4.2 Test Initiation Phase 8

4.2.1 Test Request 8

4.2.2 Schedule and Cost Estimate 9

4.3 Test Preparation Phase 9

4.3.1 Test Requirements 9

4.3.2 Test Article Documentation 9

4.3.3 Test Plan 10

4.3.4 Test Schedule 10

4.3.5 Test Article Delivery 10

4.3.6 Test Readiness Review 11

4.4 Test Execution Phase 11

4.4.1 Test Authority 12

4.4.2 Test Deviations 12

4.4.3 Facility Equipment 12

4.5 Test Closeout Phase 12

4.5.1 Customer Feedback 13

5.0 Facility Access 13

6.0 Roles and Responsibilities 14

Acronyms 15

Appendices 16

Appendix A Facility Interface and Sample Test Configurations 17

Appendix B Test Request Worksheet 24

Appendix C Computational Electromagnetics Laboratory 30

Appendix D Instrumentation Provided by Facility 34

Appendix E Customer Feedback Form 35

1.0 Antenna Test Facility

The Antenna Test Facility (ATF) is used to test antenna radiation distribution pattern performance for spaceflight applications in electromagnetic environments conditioned to simulate free space. The frequency range of this activity spans from 200 MHz to 40 GHz. The antenna ranges are used to acquire radiation performance data by taking radiation pattern measurements. The ATF has one Anechoic Chamber and an Outdoor Antenna Range. The Anechoic Chamber houses two antenna test facilities—the Far-Field Test Facility and the Near-Field Test Facility. To compliment testing in the ATF, the Computational Electromagnetics (CEM) Laboratory is available as a stand-alone service for full vehicle electromagnetic analysis that can be used as verification of microwave and antenna measurements conducted by the ATF. See Appendix C for additional details.

Far-Field Test Facility

The Anechoic Chamber's Far-Field Test Facility is uniquely designed to accommodate large test articles, such as spacecraft mockups with antennas mounted on them. The microwave material that covers the wall and door surfaces adsorbs electromagnetic energy, thereby allowing the Anechoic Chamber to simulate a space environment. The Chamber is air-conditioned, and it has artificial lighting, shielded personnel doors, and a shielded sliding high bay door that allows for easy entry and exit of large mockups. The Chamber has the capability to accommodate lower-frequency testing, down to 200 MHz, in an effort to bring indoors all testing with a frequency range from 200 MHz to 40 GHz.

Near-Field Test Facility

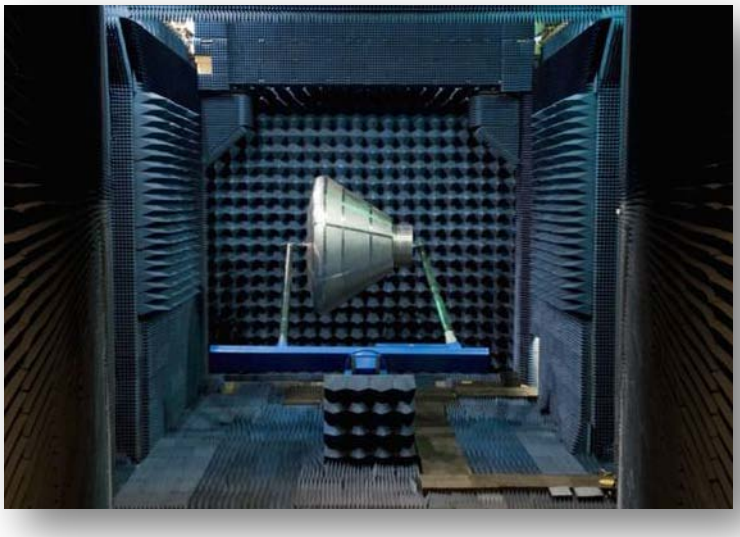

The Near-Field Test Facility within the Anechoic Chamber expands the testing and measurement capabilities of this facility by providing a means of analyzing radiating elements in cases where far-field measurements are impractical due to range length requirements.

Outdoor Antenna Range

While the Anechoic Chamber and the Outdoor Antenna Range are both capable of testing below 1 GHz, the Outdoor Antenna Range serves as the alternate facility in the event of concurrent testing in progress or during maintenance of the Anechoic Chamber.

Point of Contact

Lab Manager, Greg Lin
Johnson Space Center
2101 NASA Parkway, Houston, TX 77058
(281) 244-0969
greg.y.lin@nasa.gov

Specifications

Far-Field Test Facility

Parameter	Value
Function/Frequency Range	Measures far-field antenna radiation distribution patterns and principal plane cuts; 200 MHz to 40 GHz frequency range
Dimensions	Flared horn shape (tapered); 150 feet long with a cross section of approximately 40 x 40 feet
Range Length	Approximately 115 feet from tip of apex to Antenna Under Test (AUT)
Antenna Mounting	Single positioner or dual positioner
Load Capability	Single positioner can handle 600 lb; dual positioner can handle 1,200 lb
Maximum Mockup Size	28 feet in length on dual positioner
Radio Frequency (RF) Absorber	12-inch wedge on taper; 12-inch wedge and 36-inch twisted pyramidal on side walls; 12-inch wedge and 18-inch pyramidal on floors; 18-inch cone and 12-inch wedge on ceiling; 6-foot twisted pyramidal on back wall; floor absorber is not bonded to floor to allow for flexible floor layout, depending on application needed
Floor/Working Space	Approximately 3,000 square feet with floor absorber removed; primarily used for test setups involving large mockups
Test Viewing	Closed-circuit television (TV) camera mounted inside the chamber to allow external viewing of test
Range Access	55-foot x 55-foot back wall slides open to allow easy entry and exit of large mockups

Near-Field Test Facility

Parameter	Value
Function/Frequency Range	Measures near-field antenna patterns using raster can; 350 MHz to 4 GHz frequency range
Antenna Mounting	Hydraulic cylinder (AUT fixed in a vertical position during test) or dual tower positioner (AUT not fixed)
Scanning Plane	38 feet by 38 feet
Maximum Antenna Size	28 feet in length on dual tower; 30 feet in diameter on hydraulic cylinder

Outdoor Antenna Range

Parameter	Value
Function/Frequency Range	Measures far-field radiation principal plane cuts; 200 MHz to 26.5 GHz frequency range
Antenna Mounting	Single or dual positioner
Range Length	~180 feet from transmit antenna device under test
Maximum Antenna Size	28 feet in length on dual positioner
Load Capability	Single positioner can handle 600 lb; dual positioner can handle 1200 lb

2.0 Facility Layout

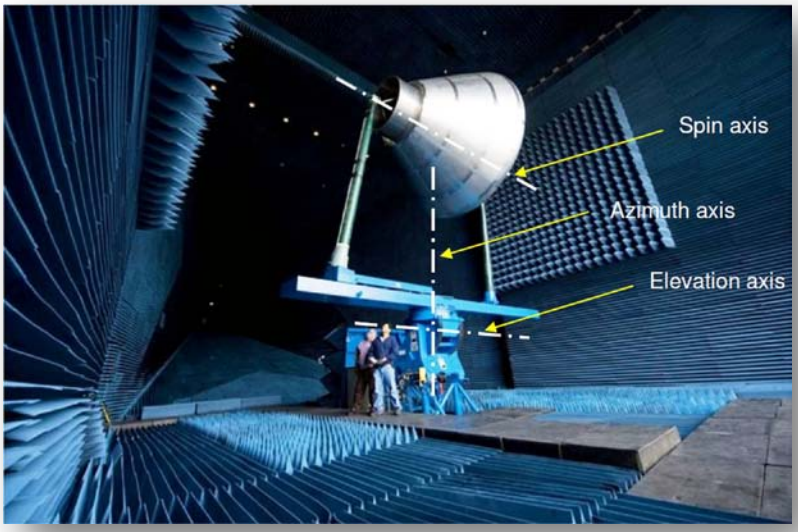

Tower Rotation Axes*

Twin Tower Configuration*

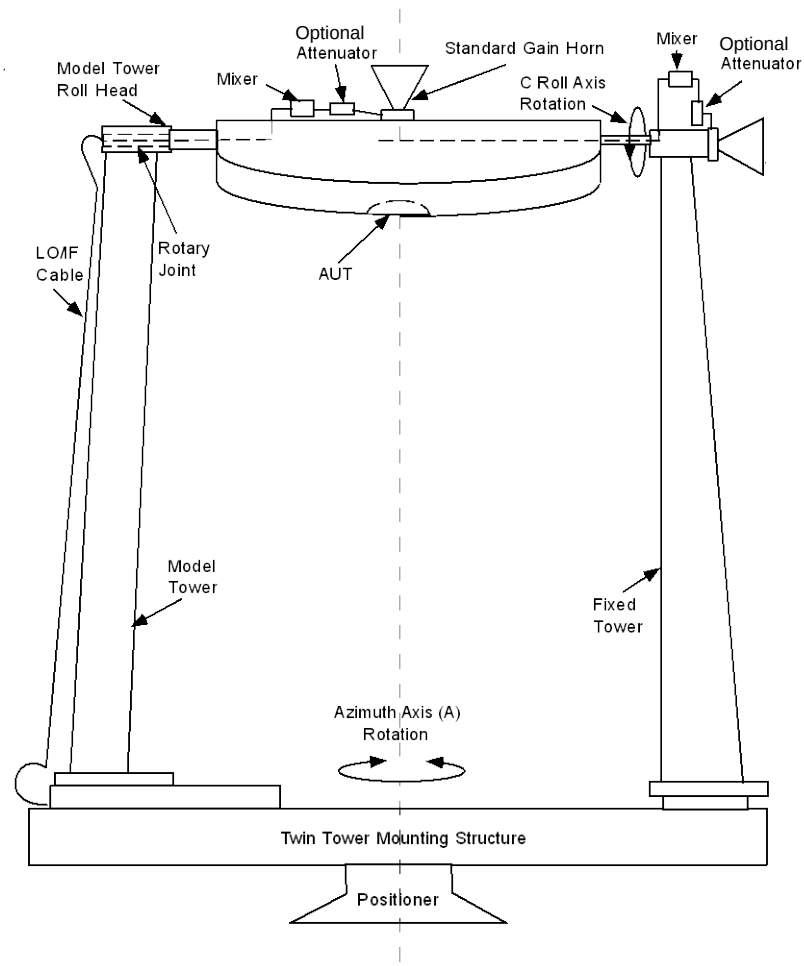

* See Appendix A for facility interface and sample test configurations.

3.0 Safety and Health

Safety is an integral part of the culture at the National Aeronautics and Space Administration (NASA). Management, leadership, and employee involvement from all organizations is critical to the success of NASA's safety program. In order to ensure personal safety and a safe test environment throughout the process, the requester shall furnish the facility with the information necessary to perform a hazard assessment of the test article. Additionally, while visiting JSC, the requester shall follow all facility-specific safety and health requirements. A facility safety briefing shall be provided to all personnel prior to the start of the test. The safety briefing will include a review of the ATF safety rules, potential hazards, and emergency procedures.

4.0 Test Process Flow

The flowchart presented below outlines the basic roadmap and significant milestones between the initial test request and delivery of test data. The flow is separated between Test Requester actions and Facility actions, highlighting interactions and inputs between the Test Requester and the Test Director.

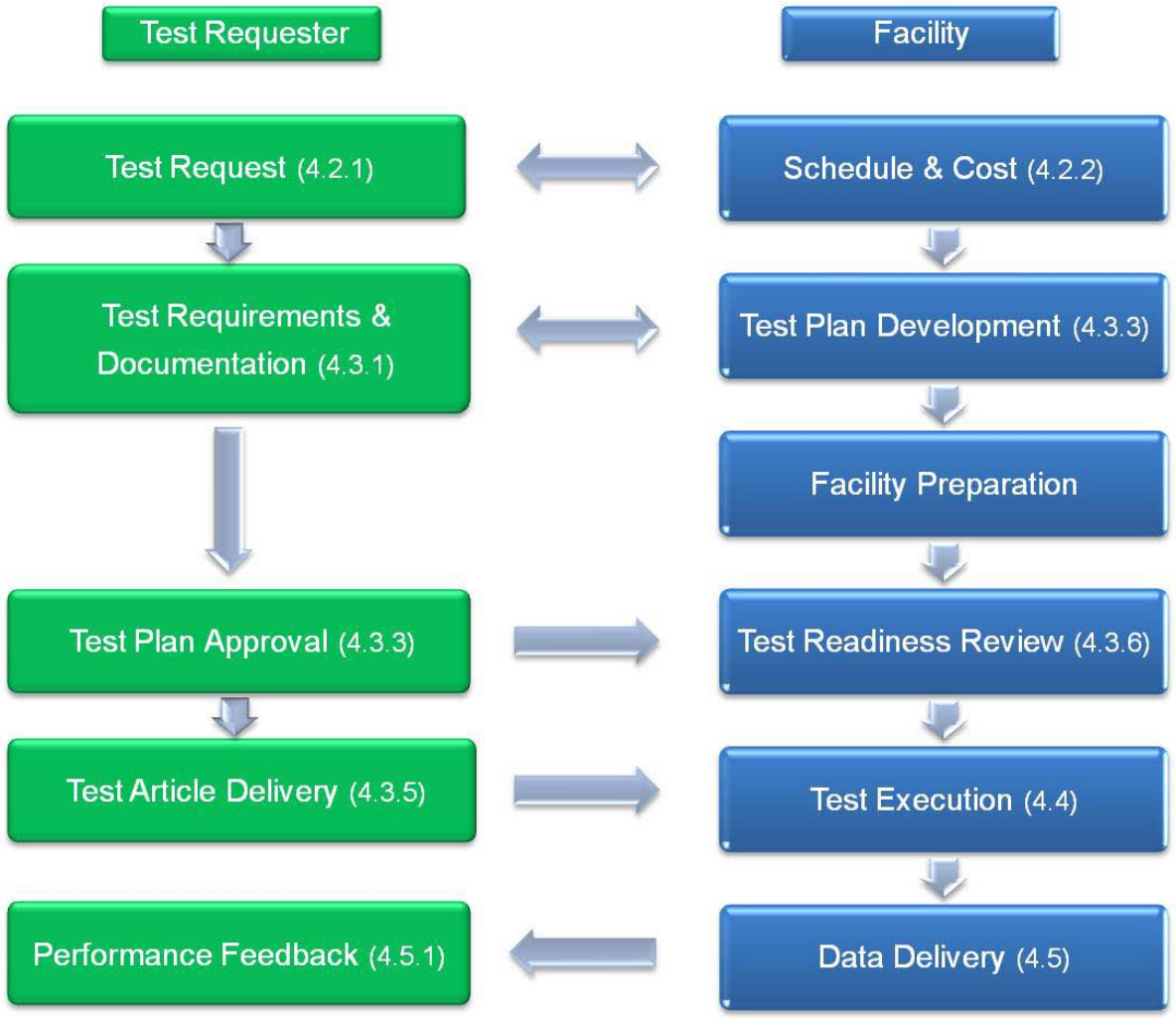

The test schedule is highly dependent on the complexity of the test, facility availability, and sequence of runs. For time-critical testing, this schedule may be accelerated. A detailed schedule shall be developed following a review of the test objectives and requirements. Major milestones are presented below:

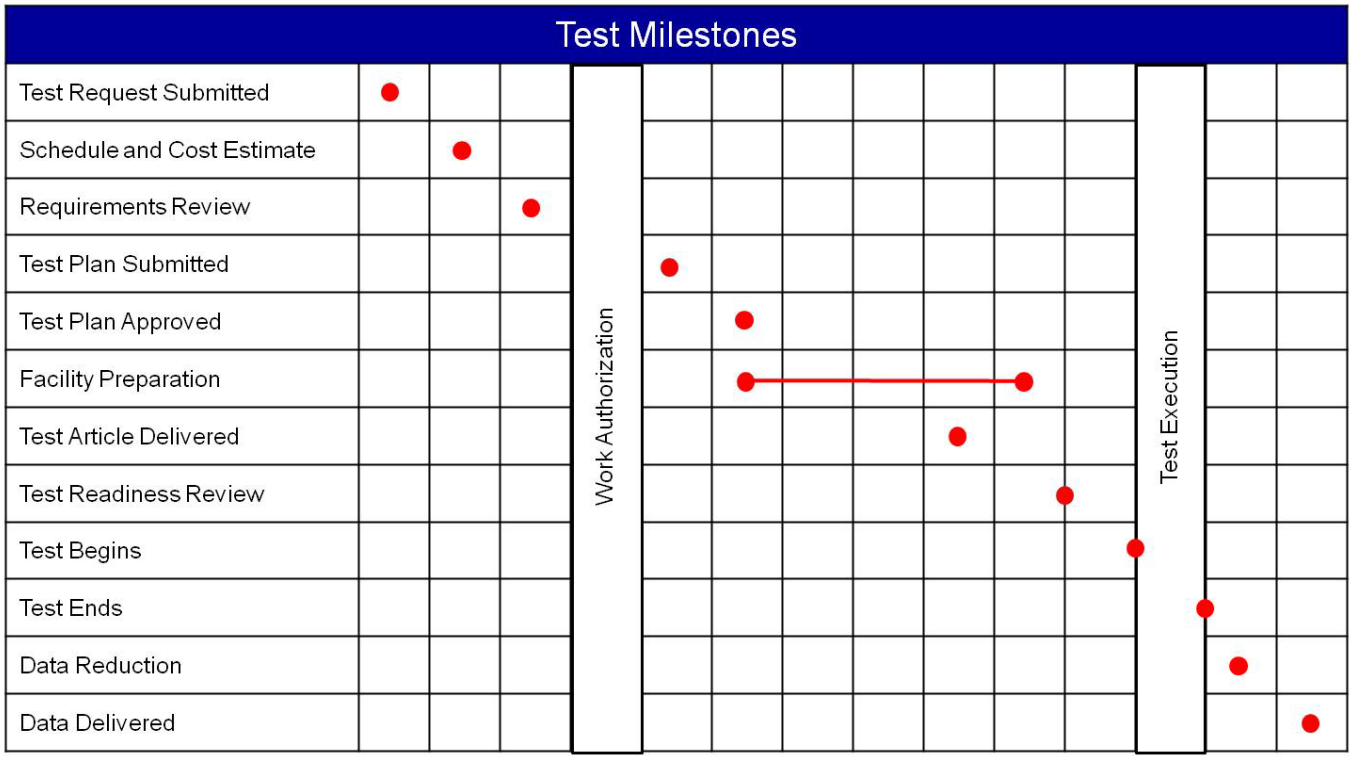

Note: *The schedule is subject to the complexity of test requirements.*

4.1. Export Controlled and Proprietary Information

JSC provides for protection of export controlled and proprietary information and hardware throughout the test process. The Test Requester shall clearly mark all export controlled or proprietary hardware items and data provided with a notice of restriction on disclosure or usage. The Test Director shall safeguard export controlled or proprietary items from unauthorized use and disclosure and ensure that test articles remain secure within the facility and are properly sequestered. Access to the facility is restricted to facility personnel and escorted visitors. Hardware items shall be returned to the Test Requester or disposed of in accordance with the Test Requester's instructions at the completion of the test activity.

4.2 Test Initiation Phase

The test initiation phase establishes the relationship between the Test Requester and the Test Director. The Test Requester shall provide a test request to the Test Director, which will be used to determine test feasibility and to develop an estimated cost and a preliminary test schedule. An initial requirements review meeting may be necessary in order to discuss the characteristics of the test article, the test approach, or any special considerations for the test. An onsite tour of the facility is highly recommended for familiarization and to provide an opportunity for an exchange of technical information.

Inputs:	Test Requester provides test request, identifies Test Article Expert
Activities:	Facility Test Director reviews test request to determine test feasibility
Outputs:	Facility delivers preliminary test plan, estimated cost and schedule to Test Requester

4.2.1 Test Request

The test request outlines the test objectives, test article description, and schedule. A Test Request Worksheet is provided in Appendix B. This worksheet addresses the basic requirements for testing in the ATF. It is suggested that the Test Requester complete this worksheet to facilitate the development of a preliminary cost and schedule estimate. Contact the Test Director if you have questions about completing the Test Request Worksheet. At a minimum, the test request should include the following information:

<u>Test Objective</u>

A brief description of the test requirements, including, but not limited to, the following:

- Desired test conditions (frequency, gain)
- Antenna position (azimuth, elevation, roll)
- Proposed test approach
- Test data requirements (e.g., primary measurements, data format)

<u>Test Article Description</u>

A brief description of the test article, including, but not limited to, the following:

- Size (provide drawings, sketches, photos)
- Weight and center of gravity
- Test article interface (e.g., load points, power requirements, cables/connectors)
- Special considerations [e.g., hazards, cleanliness, compatibility, Material Safety Data Sheets (MSDS)]
- Handling and storage requirements

Schedule

Identify the required start date and proposed date for test completion.

4.2.2 Schedule and Cost Estimate

A cost and schedule estimate, including major milestones, will be delivered to the Test Requester following receipt of the Test Request Worksheet.

4.3 Test Preparation Phase

The detailed test plan and the test schedule are finalized during the test preparation phase. The Test Requester shall provide detailed test requirements and test article documentation to the Test Director. A Test Readiness Review (TRR) will be held following approval of the test plan.

Inputs:	Test Requester provides test requirements and test article documentation
Activities:	Facility develops test plan, begins assembly of facility interface/support structure(s)
	Test Requester ships/transports test article to JSC
Outputs:	Test Requester approves test plan and test schedule
	Facility holds TRR

4.3.1 Test Requirements

A complete understanding of test requirements is mandatory for a successful test. Test requirements must be defined and reviewed so that the test team understands the effect of the requirements on test facility preparation. The Test Requester shall provide a detailed list of test requirements, including, but not limited to, the following:

- Specific test conditions
- Interface requirements (e.g., structural, electrical, mechanical)
- Data/Instrumentation requirements (provided by Test Requester and facility)

4.3.2 Test Article Documentation

Test Article Drawings

The Test Requester shall provide detailed test article drawings, as requested by the facility. Test article drawings are used to prepare the facility interfaces, test article support structures, and instrumentation connection points.

Material Safety Data Sheets

NASA must ensure that all materials exposed to test environments do not present a hazard to personnel or the test facility. The Test Requester may be asked to provide MSDS for materials used in the construction of the test article. If requested, the MSDS should be delivered prior to delivery of the test article. The Test Director will review the materials list for compatibility with the test environment and determine protective measures for personnel, if required.

Test Article Hazard Identification

The safety of facility personnel, facility equipment, and the test article is imperative to NASA. Potential hazards, material compatibility, and facility interfaces will be reviewed with the facility prior to testing. In certain instances, special precautions must be taken, due to the severity level of these potential hazards. The Test Requester may be asked to provide further information to clarify or mitigate a potential hazard. A test article hazards checklist is provided in Appendix B.

4.3.3 Test Plan

A test plan will be prepared by the Test Director, unless one is submitted by the Test Requester. The final test plan shall be approved by the Test Requester with concurrence from the Test Director. The test plan will be the controlling document, with respect to scope and approach for the test program. The test plan will include, at a minimum, the test objectives, scope, test article description, safety considerations, and data requirements. Changes to the test plan that occur after the TRR that result in a major change to the scope of the test or that present new hazards may require a delta TRR.

4.3.4 Test Schedule

A detailed schedule shall be developed by the Test Director and approved by the Test Requester. The schedule shall allow adequate time for review and approval of test requirements, assembly of facility interfaces/structures, and delivery of the test article. The schedule of other tests and maintenance activities will be reviewed and potential conflicts shall be addressed by the Test Director.

4.3.5 Test Article Delivery

The test article delivery date will be determined on a case-by-case basis. An agreed-upon delivery date shall be captured as a milestone in the test schedule. The Test Requester shall provide detailed handling instructions prior to delivery of the test article, including handling hazards, cleanliness, and storage requirements. The test article shall be secured within the test facility, unless directed to provide another means of storage. An inspection of the test article shall be performed by the Test Director and the Test Article Expert prior to the start of testing. NASA encourages Test Article Expert participation in the test article integration phase to provide immediate feedback on test article handling and on any integration issues that arise.

4.3.6 Test Readiness Review

A TRR will be held to ensure the completion of all necessary facility and test article activities prior to test execution. The TRR will include the following:

- Review of the test plan, test procedures, and other required test documentation
- Confirmation of facility and test article readiness
- Review of configuration records, including facility interface control documents, pressure system certification, instrumentation calibration, and materials compatibility
- Assurance that controls are in place to mitigate risks or hazards identified in the test hazard analysis
- Verification that data acquisition and processing functions are in place to adequately capture all critical data
- Confirmation that multimedia coverage is adequate to provide recognition and assessment of potential test anomalies

Approval to proceed with test operations is granted by the Test Readiness Review Board (TRRB). The Test Director shall ensure that all TRR actions have been accomplished prior to the start of the test. The TRRB shall convene 1 to 5 business days prior to the start of the test. TRRB participants shall include the following:

NASA TRRB Chairman	Test Article Expert (Appointed by Test Requester)
Test Director	Safety Engineer
Test Safety Officer	Quality Engineer – if required by facility

4.4 Test Execution Phase

NASA encourages Test Requester participation in the testing activity. The Test Requester shall provide a Test Article Expert to verify that test setup and execution meet the stated objectives. The Test Article Expert also shall verify test article performance and approve requested test deviations during test operations.

Inputs:	Approval to begin testing received from TRRB
Activities:	Facility completes facility buildup, Detailed Test Procedure
	Facility conducts testing activity
Outputs:	Test completed

4.4.1 Test Authority

The Test Director has the authority and responsibility to direct the test in accordance with the approved test plan and to terminate test activities per test rules when danger is imminent or test control cannot be maintained. The Test Director will ensure that positive actions are taken to halt any steps in the test procedure whenever unsafe or hazardous test conditions arise. The Test Director, with the concurrence of the Test Requester, has the authority to terminate the test when sufficient data has been obtained to meet objectives or when objectives cannot be met. Test team personnel will accept directions only from the Test Director.

4.4.2 Test Deviations

Changes to the test procedure shall be approved by the Test Requester with concurrence from the Test Director. Deviations that result in a major change to the scope of the test or that present new hazards may require a delta TRR.

4.4.3 Facility Equipment

The facility equipment is meant for use by JSC personnel. Prior arrangements shall be made with the Test Director for potential use of this equipment by the Test Requester. The duration and type of use will be identified prior to authorization for use.

JSC workstations are not available for use by Test Requester personnel. This is necessary to protect the integrity of the facility. The Test Requester shall make prior arrangements with the Test Director if a dedicated workstation is required during testing. The Test Requester is encouraged to bring a laptop computer for use during the test. Wireless Internet access is available in the facility.

4.5 Test Closeout Phase

Data shall be delivered to the Test Requester within 10 business days following completion of testing. Data delivery may be expedited if requested. The Test Requester shall make note of data delivery requirements in the Test Request Worksheet (Appendix B). The Test Requester shall notify the Test Director upon receipt of the data. Acceptance of the test data concludes the test activity.

Inputs:	Test completed
Activities:	Facility ships/transports test article to Test Requester
	Test Director delivers data to Test Requester
Outputs:	Test Requester accepts data

4.5.1 Customer Feedback

The ATF and CEM Laboratory request feedback from our customers. Evaluation of the services we provide enables continued improvement to our process. A Customer Feedback form is included in Appendix E. You are encouraged to complete this form and return it to the Test Director, following receipt of the test data. Your participation is greatly appreciated.

5.0 Facility Access

Identification badges are required for all persons requiring access to JSC. The Test Director or designee will initiate a badge request for all Test Requester personnel who will be participating in the test activity. Badge requests must be submitted at least 4 days prior to the visit to prevent badge processing delays. Badge requests for non-U.S. citizens may require a minimum of 30 business days to process. Test Requester personnel shall arrive at JSC Building 110 to pick up temporary identification badges. Visitors to JSC must show a current picture identification (valid driver's license, U.S. passport, government ID card).

The ATF and CEM Laboratory are located in JSC Building 14. A facility access briefing shall be provided to Test Requester personnel prior to the start of testing.

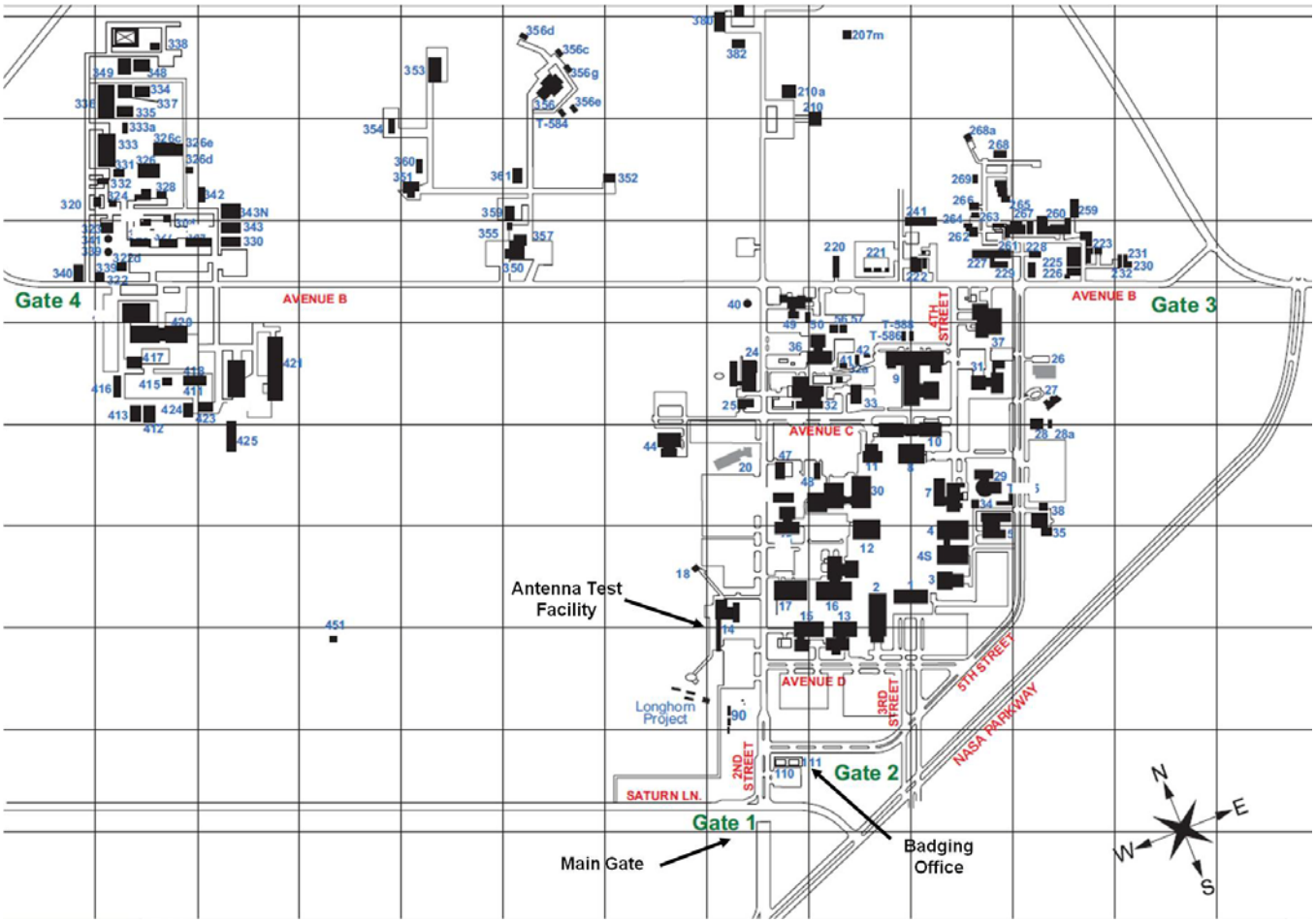

6.0 Roles and Responsibilities

Test Director – Has overall responsibility for all phases of the test process.

Test Requester – The client requesting performance of a test activity. The Test Requester is responsible for the test article and for providing a Test Article Expert.

Test Article Expert – A representative of the Test Requester with thorough knowledge of the test article and how it is to be operated in the test environment. The Test Article Expert is responsible for approving the test plan and verifying that test objectives are met.

Test Conductor – Assigned under the authority of the Test Director to execute the test in accordance with the approved test plan.

Safety Engineer –Reviews the test article hazard assessment and prepares an integrated hazard analysis for the test facility to identify any additional hazards that could result from mating the test article to the test facility.

Quality Engineer – Verifies that the test facility is ready for the test by ensuring that all constraints to the test have been closed.

Responsibilities Matrix

Item	Test Requester	Facility
Test Request Worksheet	Create	Review and provide assistance as needed
Cost and schedule	Approve	Create and sign off
Hazards	Identify test article hazards	Create test article/facility integrated hazard analysis
Test plan	Review and approve	Create and sign off
Test plan/procedure (pretest and posttest functional)	Create and sign off	Review
Test Readiness Review	Approve	Conduct and approve
Test execution	Verify test article performance Verify that test setup and execution meet objectives Approve requested deviations	Execute test
Provide test data/results	Notify Test Director of data receipt	Deliver to Test Requester
Review test data/results	Approve	
Shipping	Provide instruction	Execute per request

Acronyms

3D	Three-Dimensional
ATF	Antenna Test Facility
AUT	Antenna Under Test
CAD	Computer-Aided Design
CCW	Counterclockwise
CEM	Computational Electromagnetics Laboratory
CW	Clockwise
EMC	Electromagnetic Compatibility
FTS	Flight Termination System
GEMINI	Generalized Electromagnetic Interactions
GHz	Giga Hertz
IR	Infrared
JSC	Johnson Space Center
lb	Pounds
MHz	Mega Hertz
MSDS	Material Safety Data Sheets
NASA	National Aeronautics and Space Administration
RAM	Random Access Memory
RF	Radio Frequency
TB	Terabyte
TRR	Test Readiness Review
TRRB	Test Readiness Review Board
TV	Television
UV	Ultraviolet

Appendices

A. Facility Interface and Sample Test Configurations

B. Test Request Worksheet

C. Sample CEM Laboratory Services

D. Instrumentation Provided by Facility

E. Customer Feedback

Appendix A Facility Interface and Sample Test Configurations

The test fixture drawings included in this guide are a sampling of the capabilities within the ATF. Additional test fixture drawings are available upon request. Contact the Test Director to discuss test article interface requirements.

Attaching Model to Positioner

The arbor pictured below is the standard flange for mounting test articles to the positioner. The ATF can fabricate an attachment flange for your test article, if requested. Contact the Test Director prior to fabricating an attachment flange for your test article.

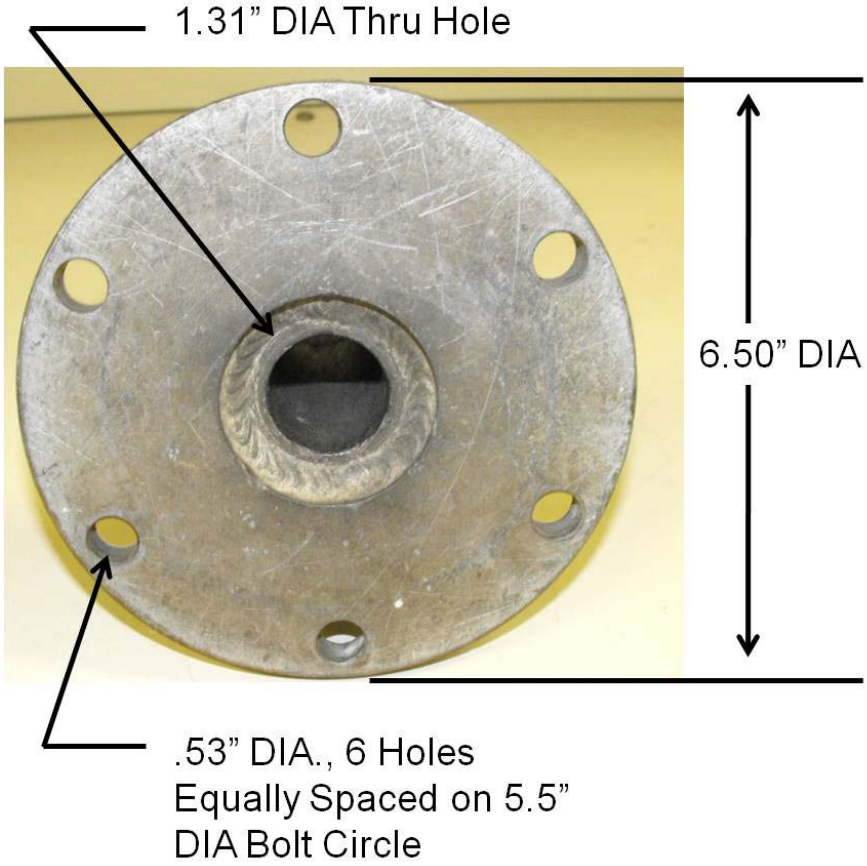

Single-Tower Configuration

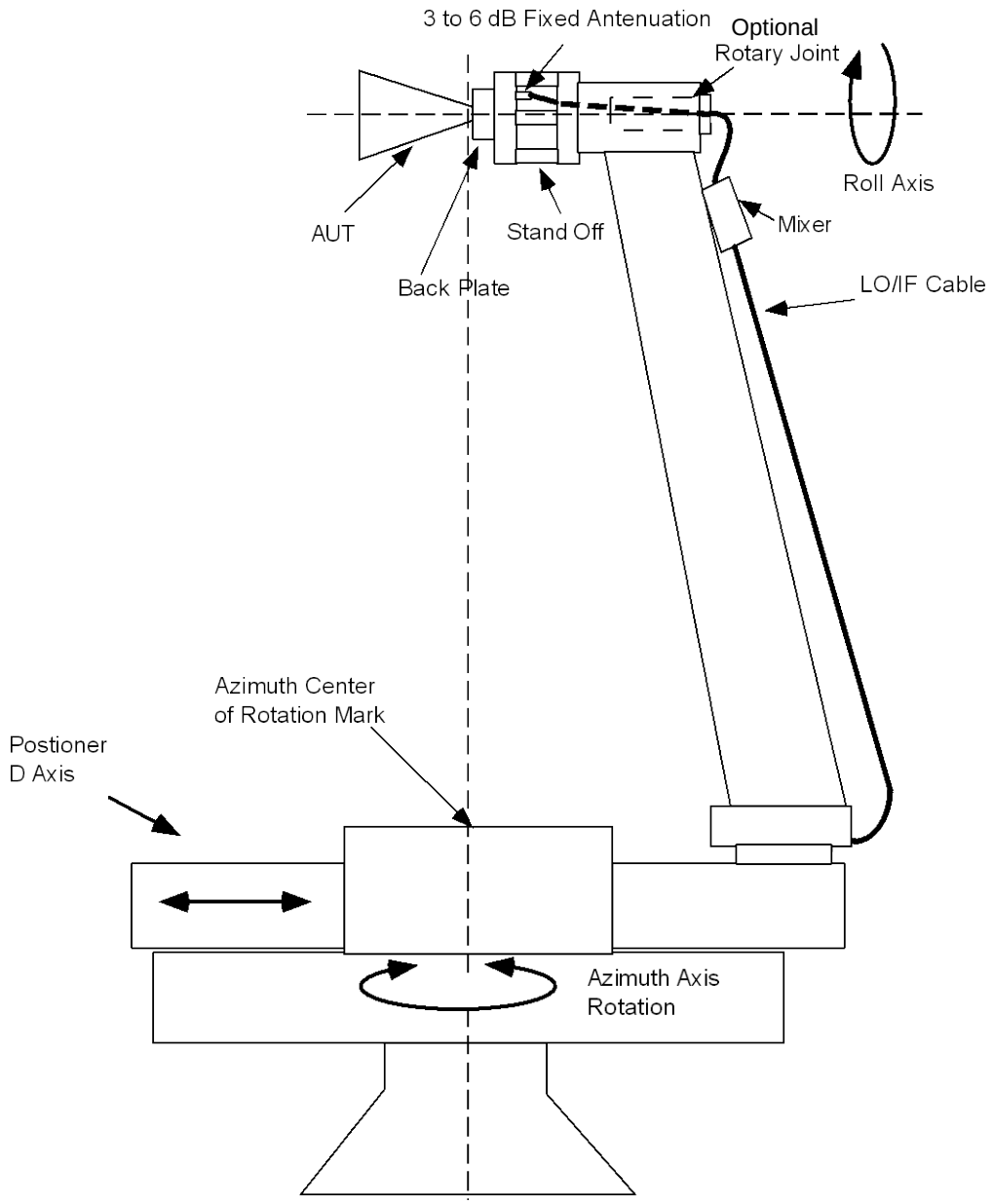

Twin-Tower Configuration

The A-axis, used for azimuth rotation, has forward and reverse limits, which prevent it from rotating continuously. The A-axis limits allow more than 360° of rotation in both clockwise (CW) and counterclockwise (CCW) directions. The A-axis zero-degree position is normally in line with the source antenna.

The B-axis of the positioner (not illustrated in this image) is used for elevation travel, which raises and lowers the single model tower configuration. It has forward and reverse limits, which restrict travel in elevation to be within the structural capabilities of the positioner and model tower.

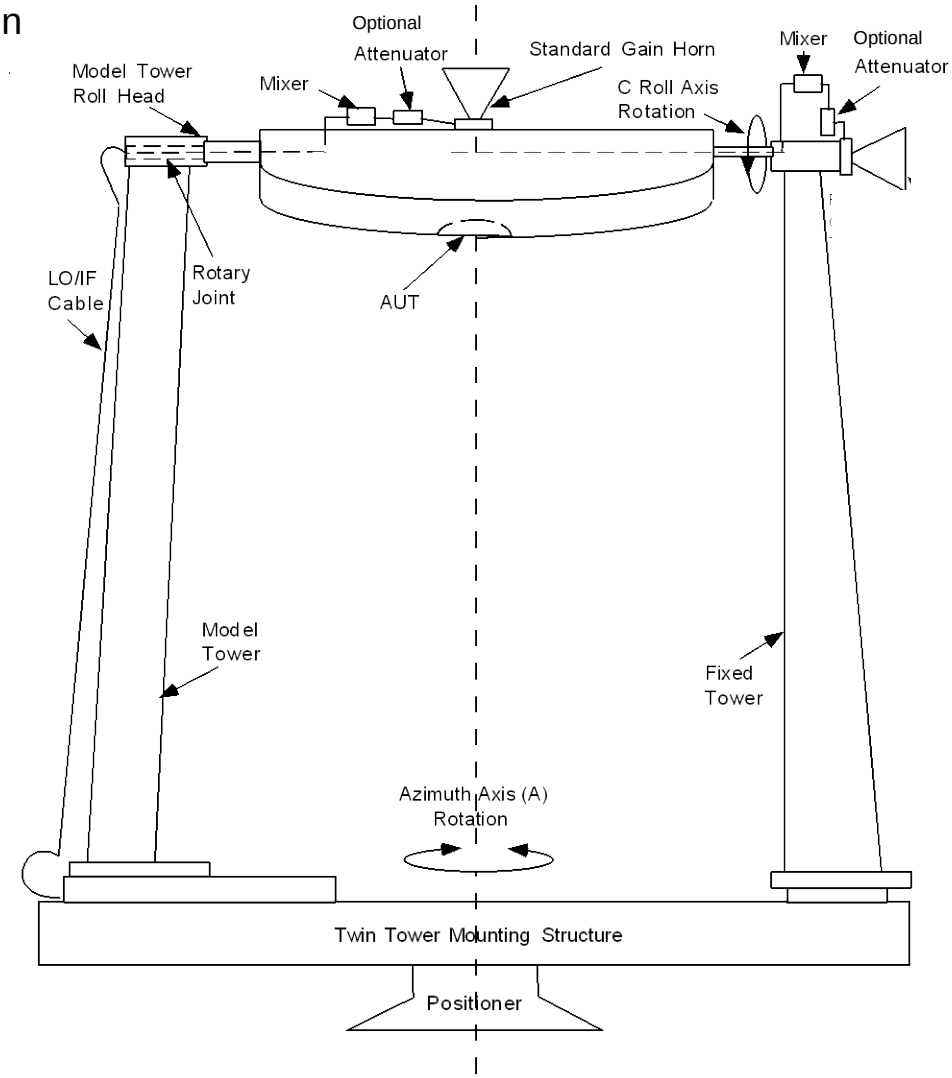

The C-axis is the model tower's roll head axis of rotation, which is continuous and has no limits. The zero position of the C-axis can be set to any desired position, depending on how the AUT should be aligned with the source antenna.

The D-axis of the positioner is a lateral adjustment and is normally used to align the AUT phase center with the positioner's A-axis of rotation.

Positioner and Source Alignment

The alignment of the twin-tower configuration is limited. The positioner azimuth axis can be aligned with the source antenna. The antenna can be positioned between the twin towers such that it is aligned with the azimuth axis of rotation.

Direct-Mount Coordinate System

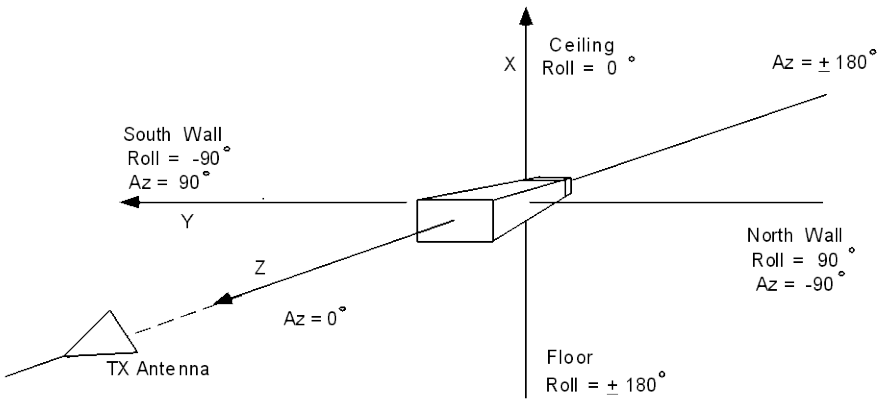

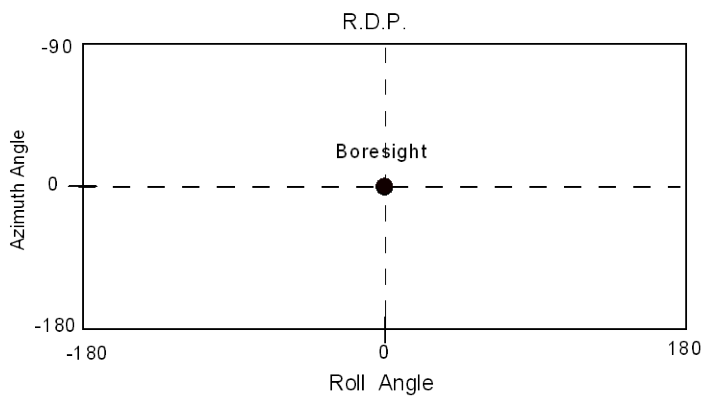

Principal Planes
x-z Roll = 90°, Az = var
z-y Roll = 0°, Az = var

Elbow-Mount Coordinate System

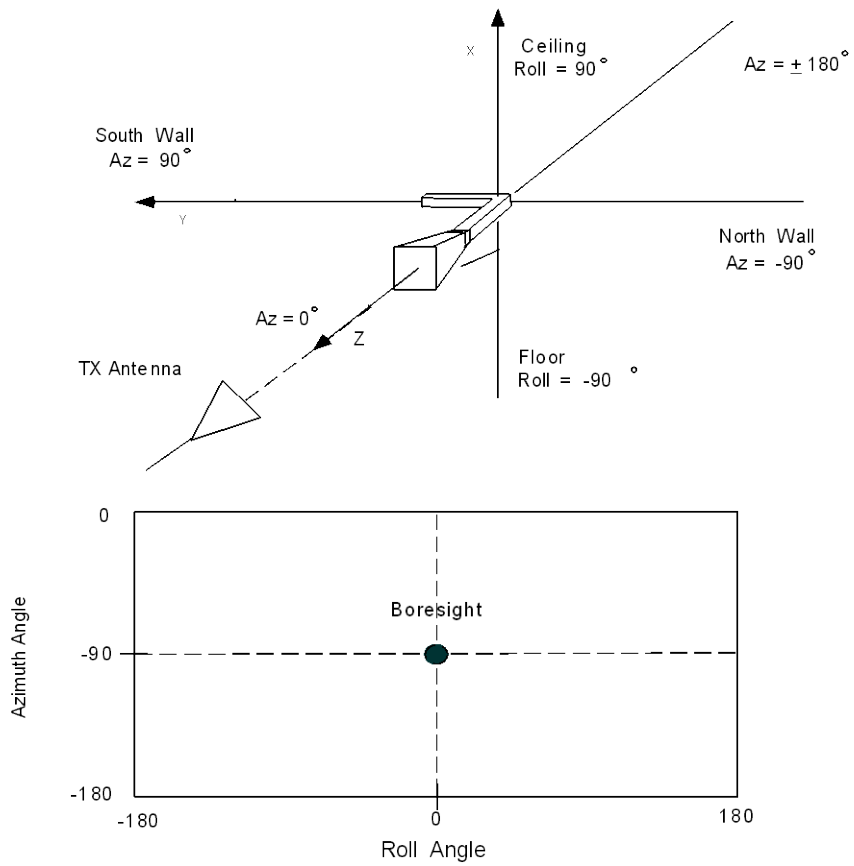

Principal Planes
x-z Az = - 90°, Roll = var
z-y Roll = 0°, Az = var

Twin-Towers Coordinate System

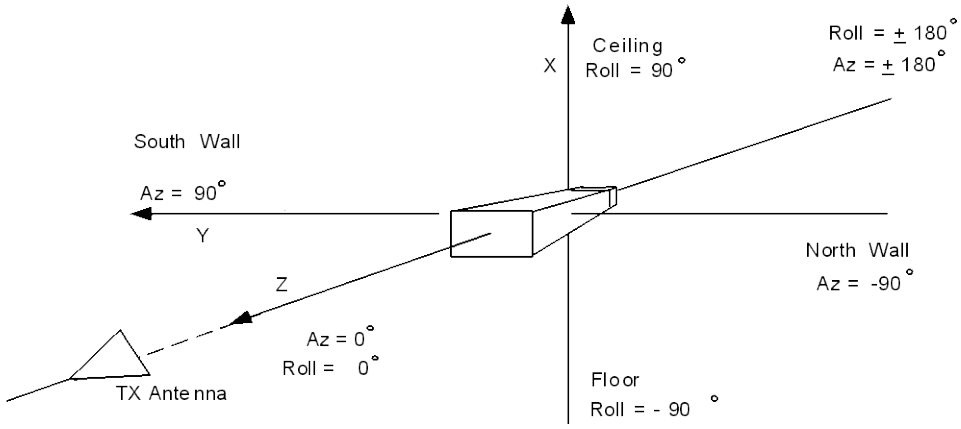

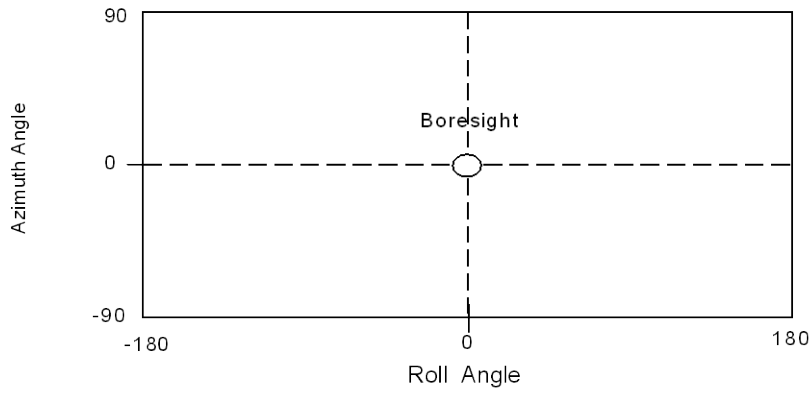

Main Planes
x-y Az = 0°, Roll =var
y-z Roll = 0°, Az = var

Sample Test Configurations

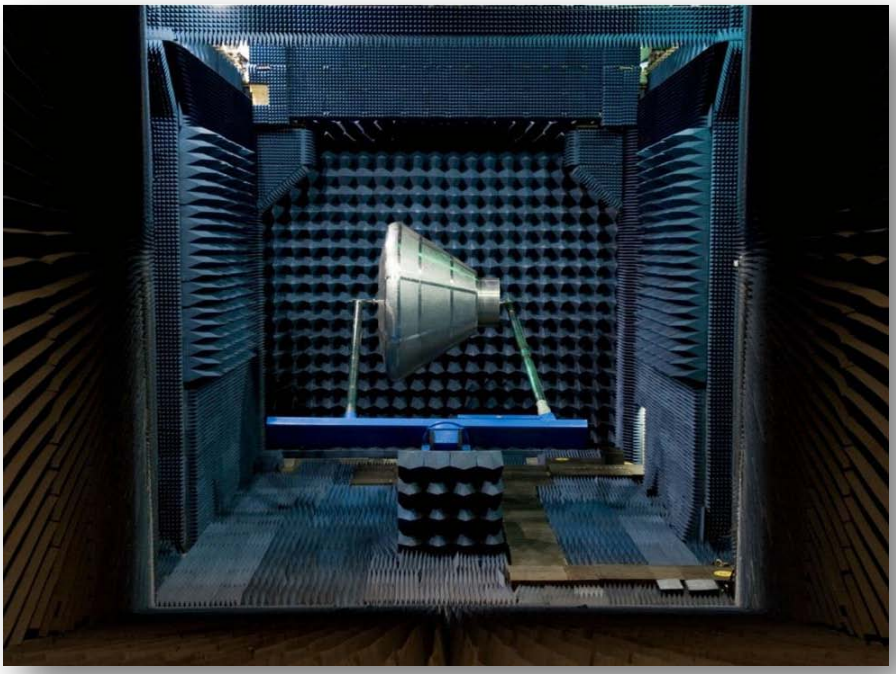

The mockups are initially mounted to the tower system with the towers in the horizontal position. The towers may be transitioned between the horizontal position and the vertical position by rotating them about the elevation axis.

Twin towers holding a mockup in the horizontal position

In this configuration, the mockup may be rotated about the vertical azimuth axis and about the horizontal spin axis. It is in this orientation that pattern measurements are made.

Twin towers holding a mockup in the vertical position

Appendix B Test Request Worksheet

Test Requester Information

Test Article Expert:	Contact Information (Phone, E-mail, Address):

Test Objectives

Purpose of Test:	
Proposed Test Start Date:	Critical Test Start Date:

Test Article

Test Article Description:	
Physical Dimensions (L/W/H):	
Weight:	Center of Gravity:

Test Article Interface

Test Article Mounting (Mounting flange provided by requester/supplied by facility):
Power Requirements:
Antenna Interface (Requester-/Facility-provided cables and connectors):

Test Article Handling Requirements

Cleanliness Level:	Controlled Access:
Special Moving/Handling:	

Positioning and Control

Antenna Pattern 1	Azimuth (A):	Elevation (B):	Roll (C):
	Axis Rotation (degrees per second):	Axis Rotation (degrees per second):	Axis Rotation (degrees per second):
Antenna Pattern 2	Azimuth (A):	Elevation (B):	Roll (C):
	Axis Rotation (degrees per second):	Axis Rotation (degrees per second):	Axis Rotation (degrees per second):
Antenna Pattern 3	Azimuth (A):	Elevation (B):	Roll (C):
	Axis Rotation (degrees per second):	Axis Rotation (degrees per second):	Axis Rotation (degrees per second):

Test Conditions

Complete the Test Conditions table below or provide a plot of the test conditions

Type	Minimum	Maximum	Tolerance
Frequency Range			
Gain			
Power Level			
Test Mode	Receiving ☐	Transmitting ☐	Both ☐
	Single Pattern ☐	Radiation Distribution Plot ☐	Both ☐

Instrumentation

Instrumentation Provided by Test Requester:
List the primary measurements to be made (e.g., amplitude, phase, polarization, gain, axial ratio):

Data Acquisition and Recording

Data Handling Requirements (storage, expedited delivery, format):

Other Information

List any other information pertinent to the test:

Test Article Hazard Checklist

A hazard analysis statement is required for any of the following applicable attributes of any of your provided hardware (e.g., test article, support equipment)

Hazard	Y	N	Comments
Mechanical	☐	☐	
Handling (> 40 lb or > 4 ft, any dimension)	☐	☐	
Instable/Fragile	☐	☐	
Sharp Edges	☐	☐	
Pinch Points	☐	☐	
Exposed Mechanisms (e.g., rotating, reciprocating)	☐	☐	
Pressure Systems	☐	☐	
Stored Energy (e.g., springs, weights, flywheels)	☐	☐	
Ejected parts, projectiles	☐	☐	
Electrical	☐	☐	
Voltage (> 50 volts)	☐	☐	
Batteries	☐	☐	
Generation/Storage (e.g., coils, magnets, capacitors)	☐	☐	
Electrostatic Sensitive Devices	☐	☐	
Thermal	☐	☐	
Hot Surfaces (> 113 °F, 45 °C)	☐	☐	
Heaters	☐	☐	
Cold Surfaces (< 39 °F, 4 °C)	☐	☐	
Cooling Devices	☐	☐	

Hazard	Y	N	Comments
Radiation	☐	☐	
Ionizing	☐	☐	
Non-Ionizing	☐	☐	
Laser	☐	☐	
Microwave	☐	☐	
Infrared (IR)	☐	☐	
Ultraviolet (UV)	☐	☐	
Radio Frequency (RF)	☐	☐	
Visible Light, High Intensity	☐	☐	
Material	☐	☐	
Uncontained Brittle Materials	☐	☐	
Test Environment Incompatibility	☐	☐	
Contained Fluids	☐	☐	
Toxic, Corrosive, Flammable Fluids	☐	☐	
Biohazards	☐	☐	
Miscellaneous	☐	☐	
Noise Level (> 85 dBA)	☐	☐	
Ultrasonic	☐	☐	
Pyrotechnics/Explosives	☐	☐	

Appendix C Computational Electromagnetics Laboratory

The Computational Electromagnetics (CEM) Laboratory is used for full-wave, frequency domain electromagnetic simulations. The laboratory houses a computer cluster that currently contains 476 processors and 1.95 TB of Random Access Memory (RAM). The cluster nodes are diskless and are utilized for computing purposes only. Special communications hardware and wiring are used to enable fast communications between the nodes while parallel computations are performed. In-house parallel-capable software is used to perform the electromagnetics analysis.

Services Provided

- Antenna and RF design
- General three-dimensional (3D) frequency domain electromagnetic analysis
- Design and development of microwave devices and antennas
- Near-field and far-field analysis
- Radar cross-section calculations
- Antenna coupling analysis
- Verification of microwave and antenna measurements

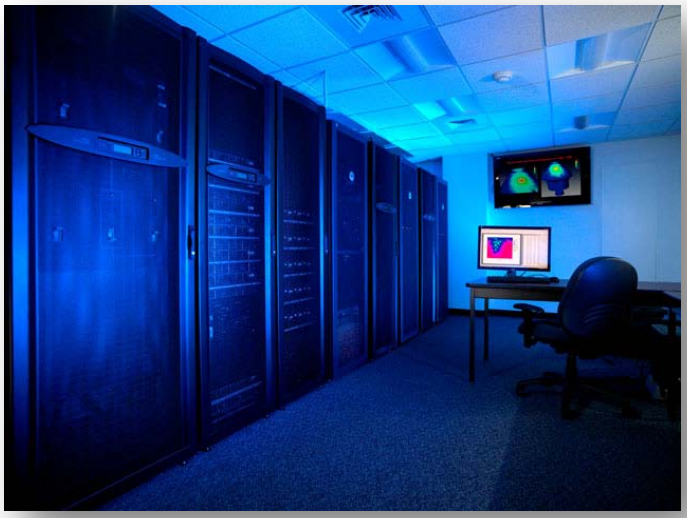

The computer cluster housed in the CEM

The CEM is available as a stand-alone service for full vehicle electromagnetic analysis and is available for verification of microwave and antenna measurements conducted by the ATF. Contact the Laboratory Manager to discuss your design and analysis requirements.

Point of Contact

Lab Manager, Michael Khayat
Johnson Space Center
2101 NASA Parkway, Houston, TX 77058
(281) 483-5385
michael.a.khayat@nasa.gov

Sample CEM Laboratory Services

Large Vehicle Analysis

Orbital Space Science Corporation's Taurus II Rocket
Flight Termination System (FTS) Analysis

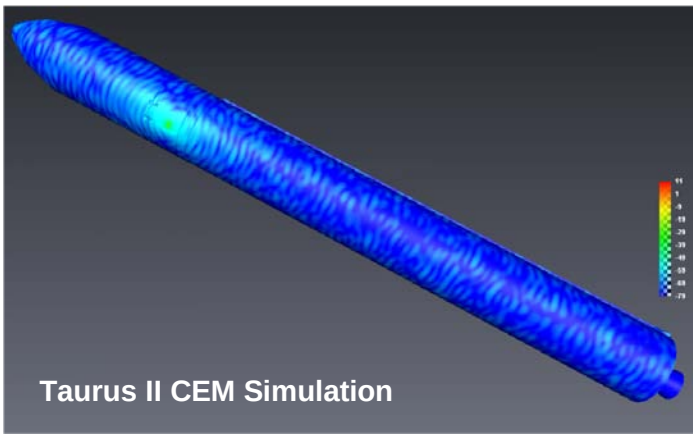

Electromagnetic Compatibility (EMC) Analysis

Cassegrain Dish Antenna Near-Field Analysis

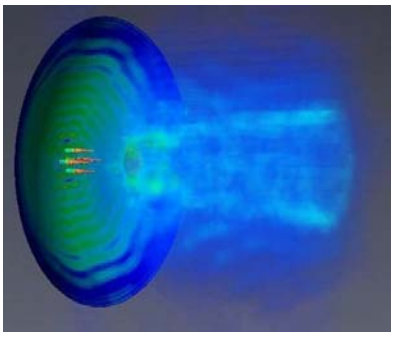

Magnetic
Fields

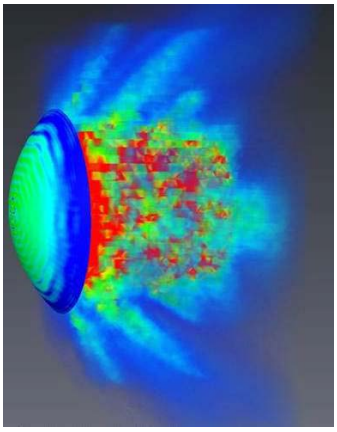

Electric
Fields

Antenna Placement Analysis

Robonaut II

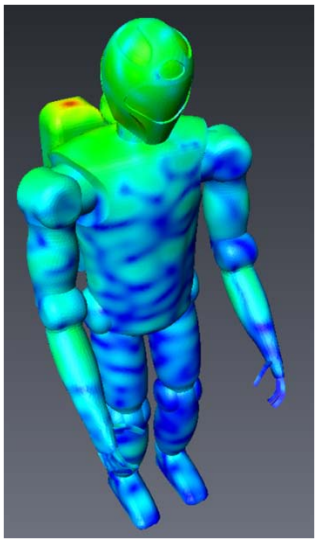

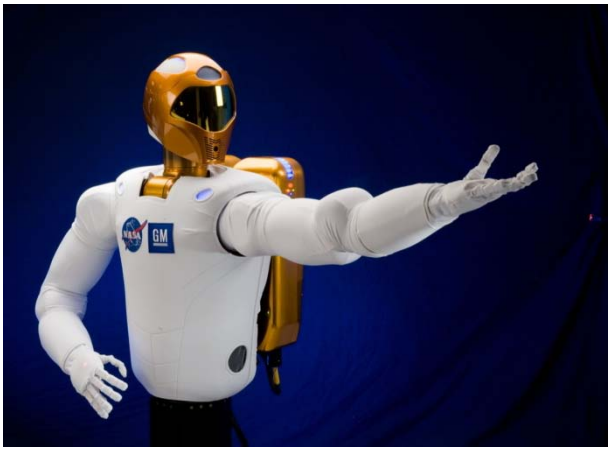

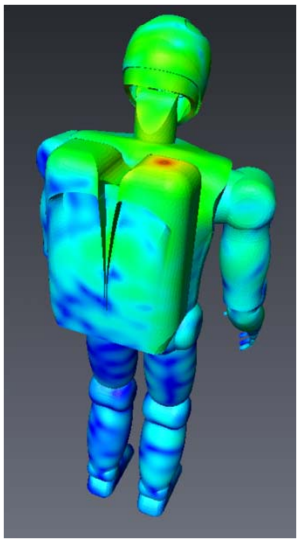

Measurement Validation

Shuttle Space-to-Space Communication System

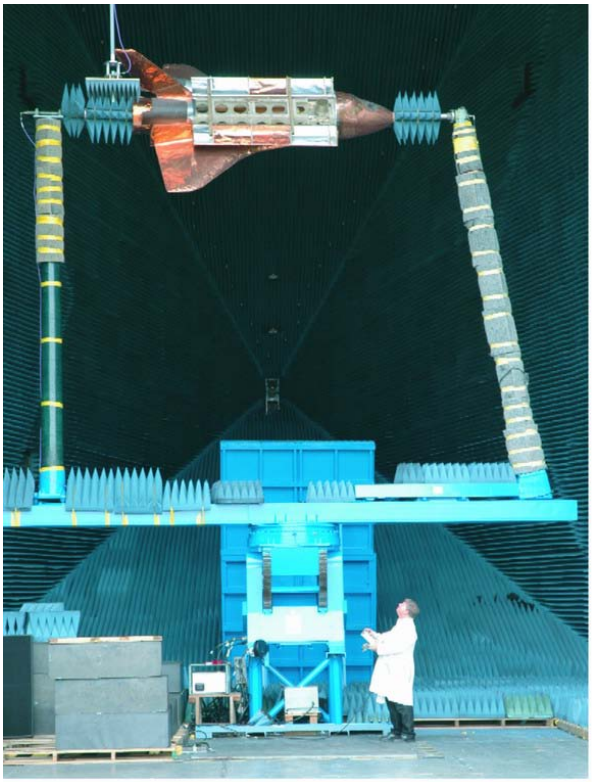

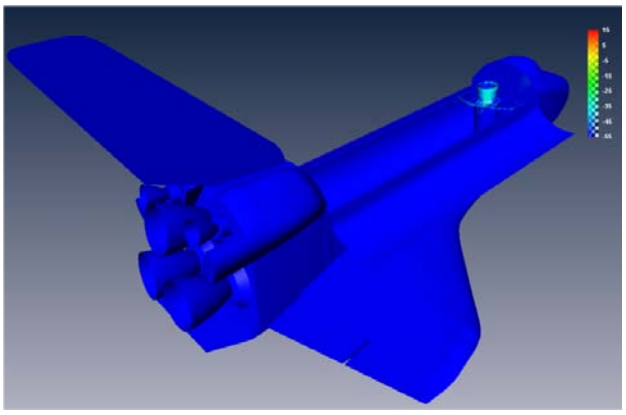

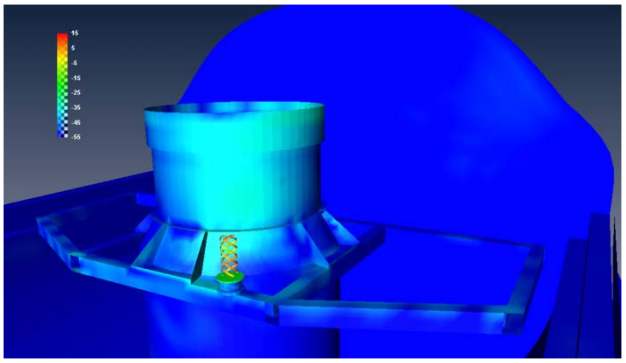

Antenna Design and Analysis

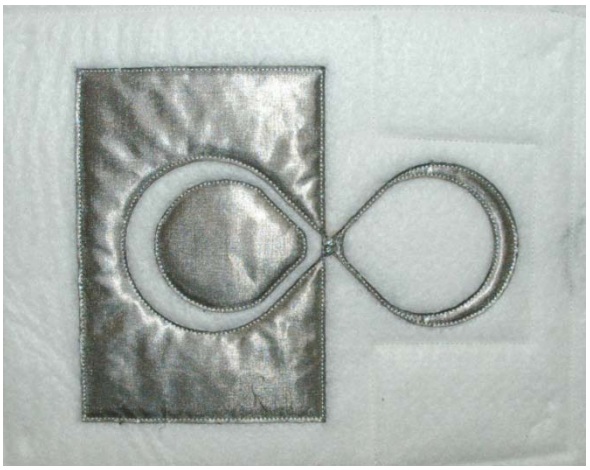

E-textile Antenna

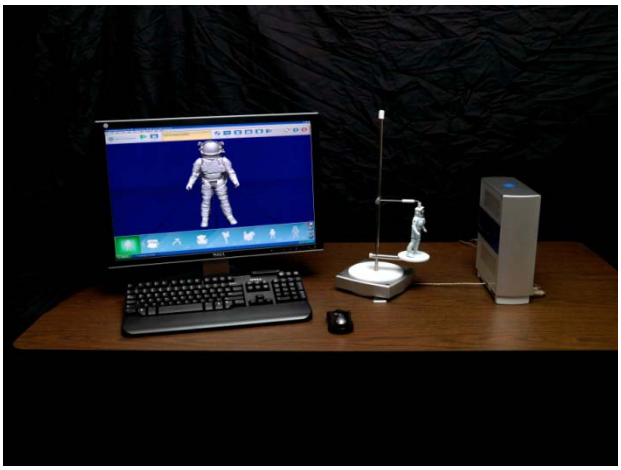

Optical Scanner

Astronaut Computer-Aided Design (CAD) with E-textile Antennas

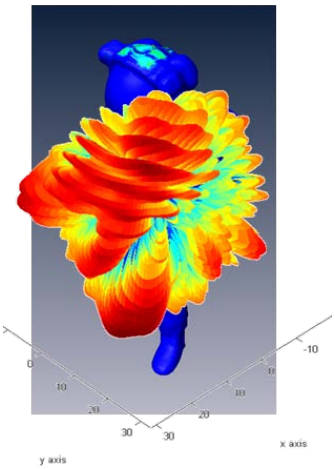

Simulated Radiation Pattern

Appendix D Instrumentation Provided by Facility

Source Antenna

Standard-gain horns can be used for the majority of testing in the anechoic chamber. Other antennas, such as log periodic, dipoles, and dish feeds, are available to use if a low-gain source antenna is required. Also, parabolic reflector antennas are available for high-gain source antennas. The available source antennas are listed in the following table:

Standard-Gain Horns

Model #	Frequency Range (GHz)	Nominal Gain	Quantity Available
SA 12-1.1	1.2 – 1.7	15.5	3
SA 12-1.7	1.7 – 2.6	15.5	2
SA 12-2.6	2.6 – 3.9	18	2
SA 12-3.9	3.9 – 5.85	18	2
SA 12-5.85	5.85 – 8.2	22.1	2
SA 12-8.2	8.2 – 12.4	22.1	2
SA 12-12	12.4 – 18	24.7	5
SA 12-18	18 – 26.5	24.7	4
644	2.6 – 3.95	16.5	1
643	3.95 – 5.85	16.5	1
642	5.4 – 8.2	16.5	2
639	12.4 – 18	16.5	2
12-0.4	0.35 – 0.53	15.8	1

Parabolic Reflectors

Model #	Frequency Range (GHz)	Nominal Gain	Quantity Available
22A-2	12.4 – 18	36	1
22-1	12.4 – 18	30	1
20R-1	18 – 26.5		1
806717-1	1 – 12.4		1

Log Periodic Antennas

Model #	Frequency Range (GHz)	Nominal Gain	Quantity Available
SAS-200/5100	0.3 – 1.8		1
SA27-4/12	0.4 – 1.7		1

RF amplifiers and attenuators are also available upon request. Contact the Test Director to discuss requirements for RF amplification or attenuation for high-powered receivers.

Appendix E Customer Feedback Form

Test Article: _____

Type of Test: ☐ Certification ☐ Evaluation

Test Date: _____

Your evaluation of our service product will enable us to serve you better.

Evaluator Name:	Organization/Mail Code:	Phone:

Please select a number between 0 and 100 to rate our performance.

Test Planning/Reporting Phase:

Ease of test coordination: _____

Satisfaction with test dates: _____

Timely completion of test plan: _____

Timely completion and scheduling of TRR: _____

Timely test reporting: _____

Technical adequacy of test report: _____

Laboratory Operations:

Completion of test objectives: _____

Competence of test personnel: _____

Satisfaction with time utilization: _____

Test data availability at test completion: _____

Explanation of rework required (if applicable): _____

Signature:	Date:

(For Lab Use Only) Average of Evaluator's Scoring:	Planning/Reporting: Laboratory Ops:

Return responses to: EV4/Greg Lin
NASA Johnson Space Center
Houston, TX 77058
Phone: (281) 244-0969
Fax: (281) 483-5830