Space Shuttle Program
FLIGHT DATA FILE

JSC-48020-130

Entry Checklist

STS-130 Flight Supplement

Mission Operations Directorate
Flight Design and Dynamics Division

Final
July 24, 2009

National Aeronautics and
Space Administration

Lyndon B. Johnson Space Center
Houston, Texas

Verify this is the correct version for the pending operation (training, simulation or flight).
Electronic copies of FDF books are available. URL: http://mod.jsc.nasa.gov/do3/FDF/index.html

JSC-48020-130

MISSION OPERATIONS DIRECTORATE

ENTRY CHECKLIST
STS-130 FLIGHT SUPPLEMENT

FINAL
July 24, 2009

PREPARED BY:

Marcia M. Trump
Book Manager

APPROVED BY:

Thomas G. Schmidt
Lead Entry GPO

Joseph H. Cavallaro
Chief, Ascent/Descent
Dynamics Branch

This document is under the configuration control of the Crew Procedures Control Board (CPCB). All proposed changes must be submitted via Change Request Workflow (CRW) to DO3/FDF Manager.

Additional distribution of this book, for official use only, may be requested in writing to DO3/PMO Administrator. The request must include justification and requester's name, organization, position, and phone number. Contractor requests are made through the NASA or DOD organization supported. Deletions, reduction in quantity, or change of address may be submitted to DO3/FDF Management Office, 281-244-1184.

ENT/130/FIN

Incorporates the following:
482#: NONE – Establishes baseline

AREAS OF TECHNICAL RESPONSIBILITY

Book Manager	DM43/M. Trump	281-483-8029
Deorbit Burn to Entry Interface	DM43/G. Pogue	281-483-8067
Contingency Procedures and Entry Interface thru Rollout	DM43/G. Pogue	281-483-8067

NOTE

This Flight Supplement must be integrated into the generic Entry Checklist to have a complete document for flight. Insert the Flight Supplement (FS) pages in the proper numerical order in the generic Entry Checklist by using the List of Effective Pages (LOEP) which provides the sequence for merging pages to create a complete Entry Checklist.

ENTRY CHECKLIST
STS-130 FLIGHT SUPPLEMENT

LIST OF EFFECTIVE PAGES

FINAL 07/24/09

Sign Off ..... *	generic	3-9	generic
ii..... *	generic	3-10	generic
Sign Off ..... *	130/FIN	3-11	generic
FS iv ..... *	130/FIN	3-12	generic
v ..... *	generic	3-13	generic
vi..... *	generic	3-14	generic
vii..... *	generic	FS 3-15	130/FIN
viii ..... *	generic	FS 3-16	130/FIN
ix..... *	generic	FS 3-17	130/FIN
x ..... *	generic	FS 3-18	130/FIN
FS xi ..... *	130/FIN	3-19	generic
FS xii ..... *	130/FIN	3-20	generic
FS xiii ..... *	130/FIN	3-21	generic
FS xiv ..... *	130/FIN	3-22	generic
xv.....	generic	3-23	generic
xvi.....	generic	3-24	generic
1-1 (3 pgs)..... †	generic	3-25	generic
1-2 (3 pgs)..... †	generic	3-26	generic
2-1	generic	3-27	generic
2-2 (6 pgs)..... †	generic	3-28	generic
2-3 (6 pgs)..... †	generic	FS 3-29	130/FIN
2-4	generic	FS 3-30	130/FIN
FS 2-5	130/FIN	3-31	generic
FS 2-6	130/FIN	3-32	generic
FS 3-1	130/FIN	FS 3-33	130/FIN
FS 3-2	130/FIN	FS 3-34	130/FIN
FS 3-3	130/FIN	3-35	generic
FS 3-4	130/FIN	3-36	generic
3-5	generic	3-37	generic
3-6	generic	3-38	generic
FS 3-7	130/FIN	3-39	generic
FS 3-8	130/FIN	3-40	generic

***** – Omit from flight book
† – Extra pages in crew copy only

3-41	generic
3-42	generic
3-43	generic
3-44	generic
4-1	generic
4-2	generic
4-3	generic
4-4	generic
FS 4-5	130/FIN
FS 4-6	130/FIN
FS 4-7	130/FIN
FS 4-8	130/FIN
FS 4-9	130/FIN
FS 4-10	130/FIN
4-11	generic
4-12	generic
5-1	generic
5-2	generic
5-3	generic
5-4	generic
5-5	generic
5-6	generic
5-7	generic
5-8	generic
5-9	generic
5-10	generic
5-11	generic
5-12	generic
5-13	generic
5-14	generic
5-15	generic
5-16	generic
5-17	generic
5-18	generic
FS 5-19	130/FIN
FS 5-20	130/FIN
5-21	generic
5-22	generic
5-23	generic
5-24	generic
6-1	generic
6-2	generic
6-3	generic
6-4	generic
7-1*	generic
7-2*	generic
FS 8-1*	130/FIN
FS CC 8-2*	130/FIN
FS CC 8-3*	130/FIN
FS CC 8-4*	130/FIN
CC 8-5*	generic
CC 8-6*	generic
CC 8-7*	generic
CC 8-8*	generic
CC 8-9*	generic
CC 8-10*	generic
CC 8-11*	generic
CC 8-12*	generic
CC 8-13*	generic
CC 8-14*	generic
CC 8-15*	generic
CC 8-16*	generic
FS CC 8-17*	130/FIN
FS CC 8-18*	130/FIN
CC 8-19*	generic
8-20*	generic
CC 8-21*	generic
CC 8-22*	generic
FS CC 8-23*	130/FIN
FS CC 8-24*	130/FIN

***** – Omit from flight book

ENTRY CUE CARDS

Title	Ref. Page	Card No.
DEORBIT BURN FLIGHT RULES (Front)	FS CC 8-2	ENT-1a/130/D/A
(Back)	FS CC 8-3	ENT-1b/130/D/A
DEORBIT BURN (RCS) (Front)	FS CC 8-4	ENT-3a/D/L
(Back)	CC 8-6	generic
DEORBIT BURN (2 ENG) (Front)	CC 8-8	generic
DEORBIT BURN (1 ENG) (Back)	CC 8-10	generic
UNBALANCED PRPLT DEORBIT BURN (Front)	CC 8-12	generic
DEORBIT BURN (MIXED XFEED) (Back)	CC 8-14	generic
ENTRY MANEUVERS (Front)	CC 8-16	generic
(Back)	FS CC 8-17	ENT-6b/130/E/A
ENTRY NO-GO CHECKLIST (Front)	FS CC 8-18	ENT-7a/E/K
EMERGENCY EGRESS (Back)	CC 8-19	generic
ENTRY CONTROL (Front)	CC 8-21	generic
(Back)	CC 8-22	generic
DEORBIT BURN MONITOR (Front)	FS CC 8-23	ENT-2a/130/A,O,D,E/A
OMS FAILURES (Back)	FS CC 8-24	ENT-2b/130/A,O,D,E/A

This Page Intentionally Blank

OMS/RCS ΔV

OMS/
RCS ΔV

OMS He PRESS/ΔV/BURN TIME

OMS% GAGE	OMS He Press *	OMS ΔV	RCS ΔV	RCS BURN MIN:SEC
50	3210	280	234	7:18
40	2810	219	183	5:42
38	2730	207	173	5:23
36	2650	194	163	5:04
34	2570	182	153	4:45
32	2490	170	142	4:26
30	2410	157	132	4:07
28	2330	145	122	3:47
26	2250	133	112	3:28
24	2170	120	102	3:09
22	2090	108	91	2:50
20	2010	96	81	2:31
18	1930	83	71	2:12
16	1850	71	60	1:52
14	1770	58	50	1:33
12	1690	46	39	1:13
10	1610	33	28	0:53
8	1530	21	18	0:34
6	1450	8	7	0:14
5	1410	2	2	0:04

***** He pressure not valid until 1 hr after last burn

ΔV CAPABILITY
ARCS ΔV fps = $\boxed{0.9}$ x [L% + R% - AFT QTY 1]
FRCS ΔV fps = $\boxed{1.0}$ x FRCS %
OMS ΔV fps = $\boxed{6.1}$ x OMS %

NOTE: Uses assumed vehicle weight of 213,738 lb

DEORBIT BURN

DEORBIT BURN

DEORBIT BURN

STS-130 LANDING SITE TABLE
(50° to 63.5° INCLINATION)

SITE	LOCATION	RWY	MLS CH	LG	+ OVR RUN
1	KSC	KSC 15	8	15000	1000
		KSC 33	6	15000	1000
2	BEN GUERIR	BEN 36	-	13720	0
		BEN 18	-	13220	1000
3	MORON AB	MRN 20	◆6	11730	1000
		MRN 02	-	11730	1000
4	ZARAGOZA	ZZA 30L	◆6	12200	1000
		ZZA 12R	-	12200	1010
5	MYRTLE BEACH	MYR 36	-	9500	1000
		MYR 18	-	9500	1000
6	WILMINGTON	ILM 06	-	7500	0
		ILM 24	-	7500	0
7	CHERRY POINT	NKT 32L	-	7110	800
		NKT 23R	-	7100	880
8	OCEANA NAS	NTU 32R	-	7500	0
		NTU 23L	-	11500	0
9	WALLOPS	WAL 28	-	7510	0
		WAL 04	-	8750	0
10	DOVER AFB	DOV 32	-	12400	0
		DOV 19	-	9100	0
11	ATLANTIC CITY	ACY 31	-	9500	0
		ACY 13	-	9500	0
12	BEN GUERIR	BEN 36	-	13720	0
		BEN 18	-	13220	1000
13	*MORON AB	MRN 20	◆6	11730	1000
		MRN 02	-	11730	1000
14	*ZARAGOZA	ZZA 30L	◆6	12200	1000
		ZZA 12R	-	12200	1010
15	GABRESKI	FOK 06	-	8500	1000
		FOK 24	-	8500	1000

◆ Available for TAL Only
* LO XRNG TAL Site Length after displaced threshold

STS-130 LANDING SITE TABLE
(50° to 63.5° INCLINATION)

SITE	LOCATION	RWY	MLS CH	LG	+ OVR RUN
16	CAPE COD CGAS	FMH 32	-	9000	0
		FMH 23	-	7500	0
17	PEASE INT'L	PSM 34	-	10020	0
		PSM 16	-	10020	0
18	HALIFAX INT'L	YHZ 23	-	8800	0
		YHZ 32	-	7700	0
19	STEPHENVILLE	YJT 09	-	9500	0
		YJT 27	-	9500	0
20	ST JOHNS INT'L	YYT 29	-	8500	0
		YYT 11	-	8500	0
21	GANDER INT'L	YQX 21	-	9700	0
		YQX 31	-	8900	0
22	GOOSE BAY	YYR 26	-	10550	0
		YYR 34	-	9080	0
23	LAJES	LAJ 15	-	10870	970
		LAJ 33	-	10870	990
24	BEJA	BEJ 01L	-	10820	0
		BEJ 19R	-	10820	900
25	KEFLAVIK	IKF 20	-	9520	0
		IKF 29	-	9560	0
26	SHANNON	INN 06	-	9540	0
		INN 24	-	9540	0
27	FAIRFORD	FFA 27	-	9490	990
		FFA 09	-	9490	970
28	KOLN-BONN	KBO 14L	-	12020	0
		KBO 32R	-	12020	0
29	ISTRES AB	FMI 33	◆6	11300	3960
		FMI 15	-	12300	0
30	ESENBOGA	ESN 03R	-	11800	0
		ESN 21L	-	11800	0

◆ Available for TAL Only

Length after displaced threshold

STS-130 LANDING SITE TABLE
(50° to 63.5° INCLINATION)

SITE	LOCATION	RWY	MLS CH	LG	+ OVR RUN
31	KING KHALID	KKI 15R KKI 33L	- -	13300 13300	0 0
32	DIEGO GARCIA	JDG 31 JDG 13	- -	12000 12000	950 950
33	AMBERLEY TINDAL RAAF	AMB 15 PTN 14	- -	9500 8500	0 0
34	YOKOTA AB	JTY 36 JTY 18	- -	11000 11000	1000 1000
35	ANDERSEN AFB	GUA 06L GUA 24R	- -	10560 10560	1050 1000
36	WAKE ISLAND	WAK 28 WAK 10	- -	9360 9360	0 0
37	HONOLULU	HNL 08R HNL 26L	- -	11500 11500	0 0
38	ELMENDORF	EDF 24 EDF 06	- -	9500 9500	0 0
39	HAO ATOLL	HAO 12 HAO 30	- -	10690 10690	0 0
40	EDW TEMP	EDT 22R EDT 04L	8 6	12000 12000	1000 1000
41	ASCENSION	HAW 13 HAW 31	- -	9520 9520	0 0
42	NORTHRUP	NOR 17 NOR 23	6 6	15000 15000	Lkbd Lkbd
43	NORTHRUP	NOR 05 NOR 35	- -	15000 15000	Lkbd Lkbd
44	EDWARDS AFB	EDW 15 EDW 18L	- -	16300 15000	Lkbd Lkbd
45	EDWARDS AFB	EDW 22 EDW 04	8/† 6	15020 14020	0 1800

† MSBLS Jr. Ch 8 - Requires Uplink

Length after displaced threshold

1: GNC DEORB MNVR COAST	2: GNC 50 HORIZ SIT
	3: BFS, GNC 50 HORIZ SIT

HORIZ SIT CONFIG

ALTM – ITEM 9 + [ ][ ][.][ ][ ]

	PASS ITEM		BFS ITEM	
PTI	INH	√1		
LAND SITE (DEL PAD)		√41		√41
RWY (DEL PAD)		√3		√3
		√4		√4
TAEM TGT				
G&N	OVHD	√6	blank	
HSI	blank		blank	
XEP	NEP	√7	NEP	√7
AIM (DEL PAD)	NOM (or CLSE)	√8	NOM or (CLSE)	√8
SPDBK	NOM	√39		
NAV				
GPS	INH	√43	INH	√43
DRAG H	AUT	√22	AUT	√22
ADTA H	INH	√26	INH	√26
MLS	AUT	√50		
G&C				
GPS	INH	√48		
ADTA	INH	√29	AUT	√28

* If BFS engaged: *
* Set BFS HSD ITEMs to PASS config *

G51 SEL ATMOSPHERE:
incl ≤ 50° ITEM 22 EXEC
incl > 50° SEL ITEM NR (table)

Hemi	Jan	Feb	Mar	Apr	May	Jun	Jul	Aug	Sep	Oct	Nov	Dec
N Desc	23	23	23	23	22	24	24	24	22	23	23	23
S Asc	24	24	22	23	23	23	23	23	23	23	22	24
N Asc	22											
S Desc												

1: GNC DEORB MNVR COAST	2: GNC 50 HORIZ SIT

3: GNC 51 OVERRIDE

√ELEVON AUTO – ITEM 17 (*)
√SSME REPOS – ITEM 19 (ENA)
√WRAP MODE – ITEM 45 (ENA)
If PLB holding > 10K lb:
FILTER ALT – ITEM 21 EXEC (*)

3: BFS, GNC 51 OVERRIDE

√ELEVON AUTO – ITEM 17 (*)
√SSME REPOS – ITEM 19 (ENA)
√WRAP MODE – ITEM 45 (ENA)
If PLB holding > 10K lb:
√FILTER ALT – ITEM 21 (*)

* DES any failed/comm faulted *
* IMU, RGA, AA, or SURF feedback *

2: GNC DEORB MNVR COAST

3: BFS, GNC DEORB MNVR COAST

√BFS GMBL sel config same as PASS GMBL sel config

DEORBIT BURN CARDS

BURN CARDS

DEORBIT BURN FLIGHT RULES
ONE-ORBIT LATE AVAILABLE ENT-1a/130/D/A

	FAILURE	PRE TIG Delay (max) One Orbit	PRE TIG Delay (max) One Day	POST TIG Stop Burn, > Safe HP
	APU/HYD			
1	No APU operating	... X ...	.....	
	DPS			
2	RDNT fail, Split	.....	...X....	X
3	1 GPC	... X ...	.....	
4	BFS	.....	...X....	
5	GPC BITE (Multiple GPCs)	.....	...X....	
	ECLS			
6	2 Av Bay Fans in Bay 3	... X ...	.....	
7	2 Av Bay Fans in Bay 1 or 2	.....	...X....	
	ELEC			
8	H2 Manf or TK leak (not in depleted tk(s) _____)	... X ...	.....	
9	2 MN Buses	.....	...X....	X
10	CNTL CA1 (No BFS Engage in GPC 3/5)	.....	...X....	
11	Multi Φ AC BUS (unshorted)	... X ...	.....	
	GNC			
12	1 MLS (if reqd), IMU, or GPS (C-band not avail)	... X ...	.....	
13	IMU Dilemma	.....	...X....	X
14	RHC Dilemma	... X ...		
15	2 IMUs (Not targeting EDW/NOR)	.....	...X....	
16	2 ADTAs (Winds > 80kts or Dynamic Wx)	... X ...	.....	
	HOOK VELCRO			**HOOK VELCRO**
17	2 FCS Channels (same surface) (Not targeting NOR/EDW)	... X ...	.....	
18	2 AAs, RGAs (Not targeting EDW/NOR)	... X ...	.....	
	OMS			
19	Prplt Tank	... X ...	.....	.....X ①
20	Ignition (neither eng ignites)	... X ...	.....	
21	Both OMS Eng fail	.....	.....	.....X ②
22	Prplt Lk after LAST LOS	perigee adjust		
	AFT RCS			
23	2 jets, same direction, same pod	... X ...	.....	
24	Prplt Lk after LAST LOS	... X ...	.....	
25	1 AFT RCS PROP TK fail	... X ...	.....	
	COMM			
26	MCC GO for DEORBIT not rcvd	.....	...X....	

BURN CARDS

① Stop Burn > OMS PRPLT FAIL HP (Ref: DEL PAD/BURN Card)
② Stop Burn > OMS ENG FAIL HP (Ref: DEL PAD/BURN Card)

DEORBIT BURN FLIGHT RULES
ONE-ORBIT LATE NOT AVAILABLE ENT-1b/130/D/A

	FAILURE	PRE TIG Delay (max) One Day	POST TIG Stop Burn, > Safe HP
	APU/HYD		
1	No APU operating	X	
	DPS		
2	RDNT fail, Split	X	X
3	1 GPC		
4	BFS	X	
5	GPC BITE (Multiple GPCs)	X	
	ECLS		
6	2 Av Bay Fans in Bay 3		
7	2 Av Bay Fans in Bay 1 or 2	X	
	ELEC		
8	H2 Manf or TK leak (not in depleted tk(s) _____)	X	
9	2 MN Buses	X	X
10	CNTL CA1 (No BFS Engage in GPC 3/5)	X	
11	Multi Φ AC BUS (unshorted)		
	GNC		
12	1 MLS (if reqd), IMU, or GPS (C-band not avail)	X	
13	IMU Dilemma	X	X
14	RHC Dilemma	X	
15	2 IMUs (Not targeting EDW/NOR)	X	
16	2 ADTAs (Winds > 80kts or Dynamic Wx)	X	
	HOOK VELCRO		**HOOK VELCRO**
17	2 FCS Channels (same surface) (Not targeting NOR/EDW)	X	
18	2 AAs, RGAs (Not targeting EDW/NOR)	X	
	OMS		
19	Prplt Tank	X	X ①
20	Ignition (neither eng ignites)	X	
21	Both OMS Eng fail		X ②
22	Prplt Lk after LAST LOS	perigee adjust	
	AFT RCS		
23	2 jets, same direction, same pod	X	
24	Prplt Lk after LAST LOS	X	
25	1 AFT RCS PROP TK fail	X	
	COMM		
26	MCC GO for DEORBIT not rcvd	X	

① Stop Burn > OMS PRPLT FAIL HP (Ref: DEL PAD/BURN Card)
② Stop Burn > OMS ENG FAIL HP (Ref: DEL PAD/BURN Card)

DEORBIT BURN (2 ENG)

√MM302 √OMS BOTH
Enter TGO + 5 sec
√TRIM per MNVR PAD or P +0.0, LY -5.7, RY +5.7
L,R OMS He PRESS/VAP ISOL A (two) – GPC
B (two) – OP
√DAP – AUTO(PASS)/DISC
ADI – LVLH(REF)/HI/MED
FLT CNTLR PWR (two) – ON

TIG-2 OMS ENG (two) – ARM/PRESS
- :15 EXEC (NO EXEC > TIG + [ ] : [ ])
- :15 If OMS AFT QTY < 11%, THC +X to OMS IGN + 1 sec
:00 TIG Start watch (√P_C, ΔVTOT, ENG VLVs)
If no OMS ignition: APUs – SHUT DN

OMS PRPLT FAIL:
Failed OMS ENG – OFF

L OMS FAIL HP	R OMS FAIL HP	
[ ]	[ ]	STOP BURN: Good OMS ENG – OFF; APUs – SHUT DN; Secure aff OMS

CONTINUE BURN:
ITEM 18 +0 EXEC
When good OMS QTY:
5%: L,R OMS XFEED (four) – OP
4%: Good OMS TK ISOL (two) – CL
If OMS P_C < 80 or OMS TEMP, OMS ENG – OFF
√ADI – LVLH, center needles
RCS COMPLETION

OMS ENG FAIL:
Failed OMS ENG – OFF
OMS XFEED at 1/2 ΔVTOT at fail [ ]
or OMS QTY [ ] %L or [ ] %R

2nd OMS FAIL (ENG or PRPLT):
Failed OMS ENG – OFF
If PRPLT FAIL:
Secure aff OMS
ITEM 18 +0 EXEC

Both ENG FAIL HP	Either PRPLT FAIL (SAFE) HP	
[ ]	[ ]	STOP BURN: APUs – SHUT DN

CONTINUE BURN:
√ADI – LVLH, center needles
Interconnect good OMS to RCS
THC +X (√OMS% vs RCS Burn Time)
RCS I'CNCT TK SW (N/A PRPLT FAIL)
THC +X (√OMS% vs RCS Burn Time)
AFT RCS RECONFIG
RCS COMPLETION

ENT-4a/D/L

DEORBIT BURN MONITOR

OMS TEMP*	L R	
FU IN P	≥ 219 220	OMS ENG FAIL
	≤ 201 208	OMS PRPLT FAIL
or No FU IN P		
OMS PC* & OMS ↓ (BFS: √accel)		
ENG VLV 1 or 2 < 70		OMS ENG FAIL
or OX IN P > 227		
OX IN P ≤ 227 or No OX IN P		OMS PRPLT FAIL
OMS OX/FU TK P (√ENG IN P)		
OX/FU LOW		He PRESS/VAP ISOL (two) – OP If aff TK P not incr: He PRESS/VAP ISOL (two) – CL At PC < 72 or OMS TEMP: OMS PRPLT FAIL
OX & FU HIGH		He PRESS/VAP ISOL (two) – CL Cycle He A(B) to maintain TK P 234-284
OMS GMBL	PRI fail	L(R) OMS GMBL – SEC
	SEC fail	If high RCS usage: OMS ENG FAIL
GPC	**1(4) &** Burning OMS aff	aff GPC PWR – OFF If SEC GMBL avail: aff MDM FF 1(4) – OFF,ON L(R) OMS GMBL – SEC
	SEC GMBL lost	If high RCS usage: OMS ENG FAIL
	2 FAs lost	√MAN SHUTDN
I/O ERROR FA	**1(4)**	L(R) OMS GMBL – SEC
		♦I/O RESET (if recov: BFS I/O RESET) If high RCS usage: OMS ENG FAIL
	2 FAs lost	√MAN SHUTDN
BCE STRG D		I/O RESET (if recov: >>)
	1(4)	If high RCS usage: L(R) OMS GMBL – SEC
RM DLMA IMU or **GPC SET SPLIT** or **2 MN BUSES**	**ABOVE SAFE** HP ⇒ [ ][ ]	STOP BURN: OMS ENG(s) – OFF >>
	BELOW SAFE HP ⇒	IMU DLMA: After C/O: √timer [G21] If any IMU ACC > 0.03: aff IMU – desel I'cnct OMS to RCS (√RCS Burn Time) THC +X to TGT HP (EOM) or 3.5 x timer at C/O (AOA) SET SPLIT: Go to "GPC" above
I/O ERROR PCM		OI PCMMU PWR – 2(1)

*If XFD, BLDN, or sensor fail, monitor ENG IN P for off-nominal performance

ENT-2a/130/A,O,D,E/A

OMS FAILURES

LEFT OMS

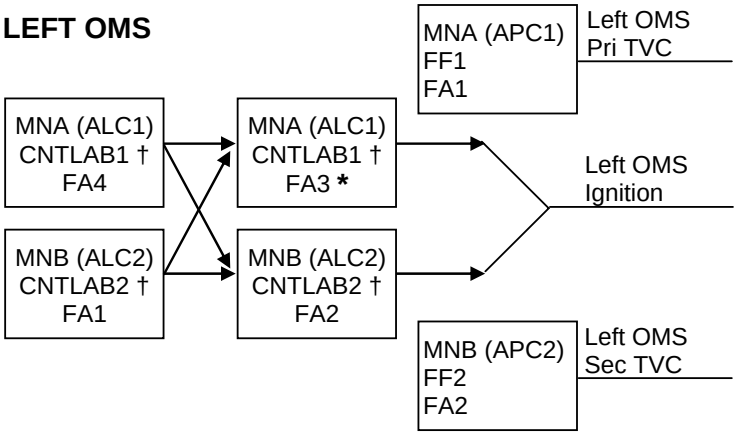

† If CNTL AB1 or AB2 (CA1 or CA2) failed and ign path still exists at OMS fail, assume L(R) OMS ↓ is PRPLT FAIL

* If L(R) P_C failed high during burn, or FA3(4) failed, at L(R) OMS fail, no guidance downmode after L(R) OMS ENG switch OFF (TGO slow, ADI needles in error, 6 ft/s underburn)

RIGHT OMS

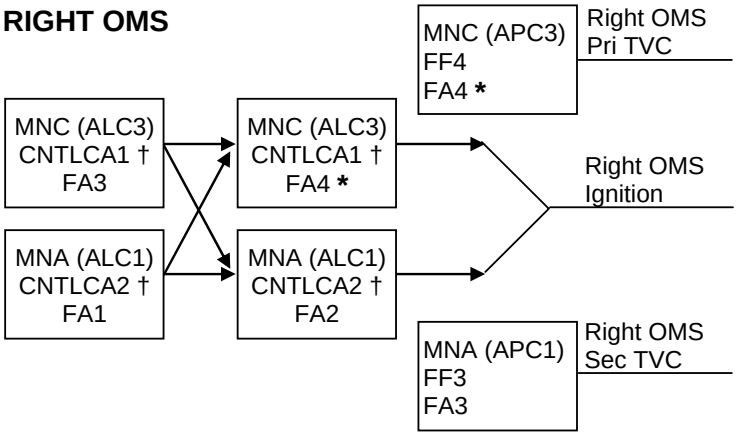

If two FA MDMs lost		
MDMs	Preburn: ENG – OFF	During burn: MAN SHUTDN
1,2	LEFT (TVC)	BOTH
1,3	RIGHT (IGN)	LEFT
1,4	LEFT (IGN)	RIGHT
2,3	LEFT (IGN)	RIGHT
2,4	RIGHT (IGN)	LEFT
3,4	RIGHT (TVC)	BOTH

ENT-2b/130/A,O,D,E/A

1: GNC DEORB MNVR EXEC	2: GNC DEORB MNVR EXEC
3: BFS, GNC SYS SUMM 2	

*** UNDERBURN ***
* Determine ΔHP (CUR HP – TGT HP) *
* Record prebank on ENTRY MANEUVERS Cue Card *

PREBANK TABLE EDW (HA = 191 NM)

EDW										
ΔHP	0	4	8	12	REDES.	13	14	15	REDES.	
PREBANK	0	80	105	130	NOR ELS	145	160	180	YYR	
NOR						IF NOR NOGO				
G50 ITEM 41 +4 2, √RWY 17										
ΔHP		11	12	13	15	16	17	18	REDES.	
PREBANK		105	110	115	135	145	160	175	YYR	
YYR										
G50 ITEM 41 +2 2, √RWY 26										
ΔHP					16	19	21	24	26	28
PREBANK					75	90	100	125	145	180

130 ocf

PREBANK TABLE KSC (HA = 190 NM)

KSC									
ΔHP	0	2	4	6	8	10	13	15	REDES.
PREBANK	0	55	80	95	105	115	140	175	YQX
YQX									
G50 ITEM 41 +2 1, √RWY 21									
ΔHP							16	22	25 / RED.
PREBANK							95	135	170 / INN
INN									
G50 ITEM 41 +2 6, √RWY 06									
ΔHP									26 / 28
PREBANK									135 / 180

1: GNC DEORB MNVR EXEC	2: GNC DEORB MNVR EXEC

3: BFS, GNC SYS SUMM 2

C CRT1 **GNC, OPS 303 PRO**

1: GNC DEORB MNVR COAST	2: GNC DEORB MNVR COAST

C CRT1 √Uplinked INRTL EI-5 MM303 ATT with DEL PAD

```
* If no deorbit TGT uplink, enter INRTL EI-5  *
*   MM303 ATT from DEL PAD                     *
* R – ITEM 24 + ___ ___ ___  ___ ___ ___       *
* P – ITEM 25 + ___ ___ ___  ___ ___ ___       *
* Y – ITEM 26 + ___ ___ ___  ___ ___ ___       *
```

Mnvr to EI-5 ATT – ITEM 27 EXEC (*)

```
* If UNDERBURN or no  *
*   DEL PAD, manually *
*   mnvr to LVLH R 001, *
*   Y 358, P per table  *
```

TIME to EI (min)	LVLH PITCH (deg)
20	339
	343
	347
	351
	355
15	359
	3
	7
	11
	15
10	19
	23
	27
	31
	35
5	39

C **OMS GMBL PWRDN (PASS ONLY)**

CRT1 Verify GMBL positions:

	L	R
P	+5.9	+5.9
Y	+6.4	-6.4

GMBL OFF – ITEM 32 EXEC
– ITEM 33 EXEC

FLIGHT CONDITIONS	MANEUVER
V = 7K	G50 √GPS, INCORPORATE * If ELS: UHF MODE – G T/R *
V = 5K	ADTA PROBES – DEPLOY (√HEAT) Begin AIL and RUD trim monitoring
M = 3.5	If previous OMS OX TK, He TK, or RCS OX TK leak: G51 VENT DOOR CNTL OPEN – ITEM 43 EXEC
M = 2.7	√APUs HUD PWR (two) – ON
* If M < 2.5; P CSS for ADTA to G&C incorp *	
M = 2.0	Ensure ADTA to G&C else √Theta limits
M < 1.0	√R FLT CNTLR – ON P,R/Y – CSS as reqd √SPDBK CMD vs POS √NWS – 1 Lock Inertia Reels MAX N_Z [ ] . [ ]
M = 0.7	√LG EXTD ISO VLV – OP
h = 15K	√MLS
h = 10K	√A/L (KSC – Tabs, Visors, Suit O2)
h = 2K	LDG GEAR ARM pb – push (ARM lt on)
h = 300	LDG GEAR DN pb – push (DN lt on)
MAIN GEAR TD	√SPDBK – 100%
V = 195 KEAS	DRAG CHUTE ARM, DPY pb (two) – push (simo) (All lts on)
V = 185 KEAS	DEROTATE
NOSE GEAR TD	SRB SEP – MAN/AUTO and depress pb √Auto Load Relief √HYD BK ISOL VLV (three) – OP
V < 120 KGS or 5K' remaining	BRAKE as required (8-10 fps^2, -0.25 to -0.3G)
* If 5K' remaining and V > 140 KGS – MAX BRAKING *	
V = 60 KGS	DRAG CHUTE JETT pb – push (JETT1,JETT2 lt on)
V = 40 KGS	BRAKE < 6 fps^2 (-0.2G) (Antiskid cutout)
WHEEL STOP	Go to ENT C/L, <u>POST LANDING PROCEDURES</u>

ENT-6b/130/E/A
(Partial)

This Page Intentionally Blank

DRAG CHUTE DEPLOY

MCC Call	**Flight Condition**
Early	Main Gear TD
NOMINAL	**195 KEAS**
Late	Post-Nose Gear TD Xwind DTO
Emergency Only	No Deploy Except CDR call
NO DEPLOY prior to MGTD > 230 KEAS < 80 KGS Xwind > 15 kts	

FAILED TIRE TECHNIQUE

Post-MGTD	P – AUTO
185 KEAS	Deploy drag chute
180 KEAS	√Auto derotation
NGTD	Max RHC roll away from failed tire

50K	/
38K	/
28K	/
20K	/
12K	/
7K	/
3K	/
1K	/
SURF	/

ENT-6b/130/E/A
(Partial)

This Page Intentionally Blank

ENTRY ALPHA

VR	α ref	R	H	$\dot{H}$ref	Rref
25	HI 40 LO	4412	400		
24	HI 40 LO	2606	249	-47	L79
23	43 40 37	2137	241	-64	69
22	43 40 37	1784	234	-84	63
21	43 40 37	1509	228	-106	60
20	43 40 37	1284	220	-124	59
19	43 40 37	1115	214	-147	60
18	43 40 37	972	208	-170	R61
17	43 40 37	859	202	-189	61
16	43 40 37	767	194	-197	63

KSC 15

MAX L/D	
M	α
3	17
2	15
1	12

(130 OCF CY)

HOOK VELCRO

ASC-14b/130/A,E/A

HOOK VELCRO

HOOK VELCRO

15	43 40 37	684	188	-118		64
14	43 40 37	612	184	-127		62
13	43 40 37	544	180	-137		60
12	43 40 37	481	175	-153		58
11	42 39 36	425	170	-195		56
10	41 38 35	374	163	-174	L50	
9	39 36 33	326	159	-207	44	
8	37 34 31	277	151	-239	40	
7	33 30 27	229	141	-267	39	
6	30 27 24	185	130	-271	40	
5	26 23 20	141	117	-273	41	
4	22 19 18	106	104	-264		R40
3	19 16 15	75	91	-248		38
2.5	14	61	83	-259		
2	14	50	77	-256		
1.5	10	39	69	-308		
1	8	28	53	-264		

HOOK VELCRO

This Page Intentionally Blank

1:	2:
3:	

POST LANDING PAYLOAD ACTIVITIES

N/A

This Page Intentionally Blank

ENTRY CUE CARD CONFIG

DEORBIT BURN FLIGHT RULES
ONE-ORBIT LATE AVAILABLE ENT-1a/130/D/A

	FAILURE	PRE TIG Delay (max) One Orbit	PRE TIG Delay (max) One Day	POST TIG Stop Burn, > Safe HP
	APU/HYD			
1	No APU operating	... X ...	.....	
	DPS			
2	RDNT fail, Split	.....	...X....	X
3	1 GPC	... X ...	.....	
4	BFS	.....	...X....	
5	GPC BITE (Multiple GPCs)	.....	...X....	
	ECLS			
6	2 Av Bay Fans in Bay 3	... X ...	.....	
7	2 Av Bay Fans in Bay 1 or 2	.....	...X....	
	ELEC			
8	H2 Manf or TK leak (not in depleted tk(s) _____)	... X ...	.....	
9	2 MN Buses	.....	...X....	X
10	CNTL CA1 (No BFS Engage in GPC 3/5)	.....	...X....	
11	Multi Φ AC BUS (unshorted)	... X ...	.....	
	GNC			
12	1 MLS (if reqd), IMU, or GPS (C-band not avail)	... X ...	.....	
13	IMU Dilemma	.....	...X....	X
14	RHC Dilemma	... X ...		
15	2 IMUs (Not targeting EDW/NOR)	.....	...X....	
16	2 ADTAs (Winds > 80kts or Dynamic Wx)	... X ...	.....	
	HOOK VELCRO			**HOOK VELCRO**
17	2 FCS Channels (same surface) (Not targeting NOR/EDW)	... X ...	.....	
18	2 AAs, RGAs (Not targeting EDW/NOR)	... X ...	.....	
	OMS			
19	Prplt Tank	... X ...	.....	.....X ①
20	Ignition (neither eng ignites)	... X ...	.....	
21	Both OMS Eng fail	.....	.....	.....X ②
22	Prplt Lk after LAST LOS	perigee adjust		
	AFT RCS			
23	2 jets, same direction, same pod	... X ...	.....	
24	Prplt Lk after LAST LOS	... X ...	.....	
25	1 AFT RCS PROP TK fail	... X ...	.....	
	COMM			
26	MCC GO for DEORBIT not rcvd	.....	...X....	

① Stop Burn > OMS PRPLT FAIL HP (Ref: DEL PAD/BURN Card)
② Stop Burn > OMS ENG FAIL HP (Ref: DEL PAD/BURN Card)

(reduced copy)

TOP
BACK OF 'DEORBIT BURN FLIGHT RULES'

DEORBIT BURN FLIGHT RULES
ONE-ORBIT LATE NOT AVAILABLE ENT-1b/130/D/A

	FAILURE	PRE TIG Delay (max) One Day	POST TIG Stop Burn, > Safe HP
	APU/HYD		
1	No APU operating	X	
	DPS		
2	RDNT fail, Split	X	X
3	1 GPC		
4	BFS	X	
5	GPC BITE (Multiple GPCs)	X	
	ECLS		
6	2 Av Bay Fans in Bay 3		
7	2 Av Bay Fans in Bay 1 or 2	X	
	ELEC		
8	H2 Manf or TK leak (not in depleted tk(s) _____)	X	
9	2 MN Buses	X	X
10	CNTL CA1 (No BFS Engage in GPC 3/5)	X	
11	Multi Φ AC BUS (unshorted)		
	GNC		
12	1 MLS (if reqd), IMU, or GPS (C-band not avail)	X	
13	IMU Dilemma	X	X
14	RHC Dilemma	X	
15	2 IMUs (Not targeting EDW/NOR)	X	
16	2 ADTAs (Winds > 80kts or Dynamic Wx)	X	
	HOOK VELCRO		**HOOK VELCRO**
17	2 FCS Channels (same surface) (Not targeting NOR/EDW)	X	
18	2 AAs, RGAs (Not targeting EDW/NOR)	X	
	OMS		
19	Prplt Tank	X	X ①
20	Ignition (neither eng ignites)	X	
21	Both OMS Eng fail		X ②
22	Prplt Lk after LAST LOS	perigee adjust	
	AFT RCS		
23	2 jets, same direction, same pod	X	
24	Prplt Lk after LAST LOS	X	
25	1 AFT RCS PROP TK fail	X	
	COMM		
26	MCC GO for DEORBIT not rcvd	X	

① Stop Burn > OMS PRPLT FAIL HP (Ref: DEL PAD/BURN Card)
② Stop Burn > OMS ENG FAIL HP (Ref: DEL PAD/BURN Card)

(reduced copy)

TOP

HOOK VELCRO

DEORBIT BURN (RCS)

HOOK VELCRO

√MM302 √RCS SEL
√RCS BURN CONFIG (L OMS I'CNCT)
L,R OMS He PRESS/VAP ISOL A (two) – OP
. . . . . Wait 2 sec . . . . . B (two) – OP
√DAP – INRTL/DISC
ADI – LVLH(REF)/MED/MED
FLT CNTLR PWR (two) – ON

TIG THC +X (No Deorbit > TIG + [ ] : [ ][ ])
Maintain PITCH ATT ERR ± 3°
Monitor ΔVTOT:
RCS I'CNCT TK SW at ΔVTOT = [ ][ ][ ]
R OMS XFEED (two) – OP
L OMS XFEED (two) – CL

OMS PRPLT LOW
AFT RCS RECONFIG AT ΔVTOT = [ ][ ][ ]
RCS COMPLETION

OMS PRPLT FAIL (MULTIPLE JETS FAIL OFF):
Secure aff OMS
STOP BURN:
SAFE HP [ ][ ] APUs – SHUT DN
CONTINUE BURN:
ITEM 18 +0 EXEC
[G23] Resel jets
Interconnect good OMS to RCS
THC +X (√OMS% vs RCS Burn Time)
AFT RCS RECONFIG
RCS COMPLETION

RCS +X JET FAIL OFF:
STOP BURN:
SAFE HP [ ][ ] APUs – SHUT DN
CONTINUE BURN:
ITEM 18 +0 EXEC
[G23] Resel jets

ENT-3a/D/L

HINGE

(reduced copy)

TOP
BACK OF 'ENTRY MANEUVERS'

HOOK VELCRO

FLIGHT CONDITIONS	MANEUVER
V = 7K	G50 √GPS, INCORPORATE * If ELS: UHF MODE – G T/R *
V = 5K	ADTA PROBES – DEPLOY (√HEAT) Begin AIL and RUD trim monitoring
M = 3.5	If previous OMS OX TK, He TK, or RCS OX TK leak: G51 VENT DOOR CNTL OPEN – ITEM 43 EXEC
M = 2.7	√APUs HUD PWR (two) – ON
* If M < 2.5; P CSS for ADTA to G&C incorp *	
M = 2.0	Ensure ADTA to G&C else √Theta limits
M < 1.0	√R FLT CNTLR – ON P,R/Y – CSS as reqd √SPDBK CMD vs POS √NWS – 1 Lock Inertia Reels MAX N_Z [ ] . [ ]
M = 0.7	√LG EXTD ISO VLV – OP
h = 15K	√MLS
h = 10K	√A/L (KSC – Tabs, Visors, Suit O2)
h = 2K	LDG GEAR ARM pb – push (ARM lt on)
h = 300	LDG GEAR DN pb – push (DN lt on)
MAIN GEAR TD	√SPDBK – 100%
V = 195 KEAS	DRAG CHUTE ARM, DPY pb (two) – push (simo) (All lts on)
V = 185 KEAS	DEROTATE
NOSE GEAR TD	SRB SEP – MAN/AUTO and depress pb √Auto Load Relief √HYD BK ISOL VLV (three) – OP
V < 120 KGS or 5K' remaining	BRAKE as required (8-10 fps^2, -0.25 to -0.3G)
* If 5K' remaining and V > 140 KGS – MAX BRAKING *	
V = 60 KGS	DRAG CHUTE JETT pb – push (JETT1,JETT2 lt on)
V = 40 KGS	BRAKE < 6 fps^2 (-0.2G) (Antiskid cutout)
WHEEL STOP	Go to ENT C/L, POST LANDING PROCEDURES

DRAG CHUTE DEPLOY

MCC Call	Flight Condition
Early	Main Gear TD
NOMINAL	**195 KEAS**
Late	Post-Nose Gear TD Xwind DTO
Emergency Only	No Deploy Except CDR call
NO DEPLOY prior to MGTD > 230 KEAS < 80 KGS Xwind > 15 kts	

FAILED TIRE TECHNIQUE

Post-MGTD	P – AUTO
185 KEAS	Deploy drag chute
180 KEAS	√Auto derotation
NGTD	Max RHC roll away from failed tire

50K	/
38K	/
28K	/
20K	/
12K	/
7K	/
3K	/
1K	/
SURF	/

ENT-6b/130/E/A

HOOK VELCRO

HOOK VELCRO

HOOK VELCRO

HOOK VELCRO

(reduced copy)

FAB USE ONLY FS CC 8-17 ENT/130/FIN

TOP

HOOK VELCRO

HOOK VELCRO

ENTRY NO-GO CHECKLIST

FAILURE OF:	AERO PTI DTO	AUTO FCS MODE	XWIND DTO (1)
APU/HYD: 1 APU			X
2 APUs	X		X
DISPLAYS: 2 ADIs	X		
CDR HUD			X (2)
CONTROLLERS:			
RHC: 1L			X
2L & 2R	X		X
RPTA: 2L or 2R			X
GNC: 2 AAs (LAT)	X		X
2 AAs (NORM)	X(M < 2.5)	X (3)	
2 RGAs	X		X
2 R DDU PWR SPLY			X
2 IMU (or 1 IMU + BITE)	X		X
2 ADTAs			X
ADTA NOT INCORP OR DLMA		X (M < 2)	
MLS NOT INCORP		X (< 6K ft)	
2 FCS CH (same surface)	X		X
DPS: 1 GPC (not restrung)			X (4)
2 GPC (restrung)	X		
2 GPC (not restrung)	X	X (3)	X
1 FF			X (4)
2 FF	X	X (3)	X
2 FA	X		X
RCS: LEAK (AFT – during ENT)	X		
2 YAW JETs (same side)	X		
MIN RCS QTY	X		
TRIM: All > ± 2.0 deg	X		
DOWNMODE:			
FCS problem	X	X	X
AOA	X		X
PLB: PLBD Latch Gang	X		
LDG/DECEL:			
Tire Leak			X
HYD BRAKE ISOL VLV			X
< 100% Brakes			X
NWS			X
ENERGY – OFF NOMINAL:			
Roll Ref Alert	X		
Above Upper Traj Line	X		
MCC GCA, or VEL & PSN update	X	X	
No A/L by 6K ft		X	
DATA: SOLID STATE RECORDERS	X (LOS)		
XWIND:			
< 10 Knots Peak			X
> 15 Knots Peak			X
> 10 Knots Gust			X
GROUND SYSTEMS:			
No Runway Aim Point			X

NOTES

(1) Consider runway redesignation (M > 6) to avoid Xwind landing
(2) GO if PAPI and BALL BAR available
(3) Pitch AUTO mode NO-GO for M < 2.5
(4) GO if only string 4 affected

HOOK VELCRO

HOOK VELCRO

HOOK VELCRO

HOOK VELCRO

HOOK VELCRO

HOOK VELCRO

TIME to EI (min)	LVLH PITCH (deg)
20	339
	343
	347
	351
	355
15	359
	3
	7
	11
	15
10	19
	23
	27
	31
	35
5	39

ENT-7a/E/K

(reduced copy)

FAB USE ONLY FS CC 8-18 ENT/130/FIN

TOP

HOOK VELCRO

HOOK VELCRO

DEORBIT BURN MONITOR

OMS TEMP*		
FU IN P	≥ L 219, R 220	OMS ENG FAIL
	≤ L 201, R 208	OMS PRPLT FAIL
or No FU IN P		
OMS PC* & OMS ↓ (BFS: √accel)		
ENG VLV 1 or 2 < 70		OMS ENG FAIL
or OX IN P > 227		
OX IN P ≤ 227 or No OX IN P		OMS PRPLT FAIL
OMS OX/FU TK P (√ENG IN P)		
OX/FU LOW		He PRESS/VAP ISOL (two) – OP If aff TK P not incr: He PRESS/VAP ISOL (two) – CL At PC < 72 or OMS TEMP: OMS PRPLT FAIL
OX & FU HIGH		He PRESS/VAP ISOL (two) – CL Cycle He A(B) to maintain TK P 234-284
OMS GMBL	PRI fail	L(R) OMS GMBL – SEC
	SEC fail	If high RCS usage: OMS ENG FAIL
GPC	**1(4) &** Burning OMS aff	aff GPC PWR – OFF If SEC GMBL avail: aff MDM FF 1(4) – OFF,ON L(R) OMS GMBL – SEC
	SEC GMBL lost	If high RCS usage: OMS ENG FAIL
	2 FAs lost	√MAN SHUTDN
I/O ERROR FA	**1(4)**	L(R) OMS GMBL – SEC
		♦I/O RESET (if recov: BFS I/O RESET) If high RCS usage: OMS ENG FAIL
	2 FAs lost	√MAN SHUTDN
BCE STRG D		I/O RESET (if recov: >>)
	1(4)	If high RCS usage: L(R) OMS GMBL – SEC
RM DLMA IMU or **GPC SET SPLIT** or **2 MN BUSES**	**ABOVE SAFE** HP ⇒ [ ][ ]	STOP BURN: OMS ENG(s) – OFF >>
	BELOW SAFE HP ⇒	IMU DLMA: After C/O: √timer G21 If any IMU ACC > 0.03: aff IMU – desel I'cnct OMS to RCS (√RCS Burn Time) THC +X to TGT HP (EOM) or 3.5 x timer at C/O (AOA) SET SPLIT: Go to "GPC" above
I/O ERROR PCM		OI PCMMU PWR – 2(1)

*If XFD, BLDN, or sensor fail, monitor ENG IN P for off-nominal performance

ENT-2a/130/A,O,D,E/A

(reduced copy)

TOP
BACK OF 'DEORBIT BURN MONITOR'

HOOK VELCRO

OMS FAILURES

HOOK VELCRO

LEFT OMS

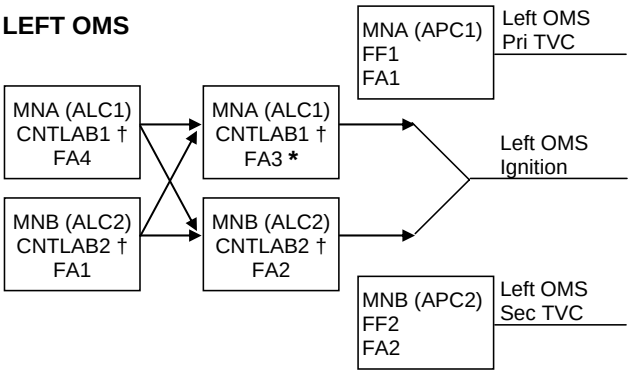

† If CNTL AB1 or AB2 (CA1 or CA2) failed and ign path still exists at OMS fail, assume L(R) OMS ↓ is PRPLT FAIL

* If L(R) P_C failed high during burn, or FA3(4) failed, at L(R) OMS fail, no guidance downmode after L(R) OMS ENG switch OFF (TGO slow, ADI needles in error, 6 ft/s underburn)

RIGHT OMS

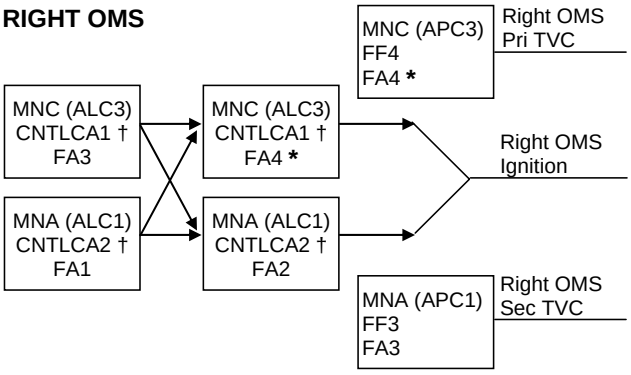

If two FA MDMs lost		
MDMs	Preburn: ENG – OFF	During burn: MAN SHUTDN
1,2	LEFT (TVC)	BOTH
1,3	RIGHT (IGN)	LEFT
1,4	LEFT (IGN)	RIGHT
2,3	LEFT (IGN)	RIGHT
2,4	RIGHT (IGN)	LEFT
3,4	RIGHT (TVC)	BOTH

ENT-2b/130/A,O,D,E/A

(reduced copy)

Space Shuttle Program
FLIGHT DATA FILE

JSC-48020-130
FINAL

SPACE SHUTTLE

ENTRY CHECKLIST

STS
130

Flight Cover (trim bottom to expose tabs)