USA006080
Rev B

Space Flight Operations Contract

Air Data System Workbook
ADS 21002

July 7, 2006

Final Version

This document has been reviewed and updated.
No subsequent updates to this document are anticipated or required due to the approaching shuttle program closure.

Contract NAS9-20000

Copyright © 2004 by United Space Alliance, LLC. These materials are sponsored by the National Aeronautics and Space Administration under Contract NAS9-20000. The U.S. Government retains a paid-up, nonexclusive, irrevocable worldwide license in such materials to reproduce, prepare derivative works, distribute copies to the public, and to perform publicly and display publicly, by or on behalf of the U.S. Government. All other rights are reserved by the copyright owner.

United Space Alliance

This page intentionally blank

USA006080
Rev B

Air Data System Workbook
ADS 21002

Prepared by

Original approval obtained

Christopher Edwards
USA/Shuttle DPS and Navigation Group

Approved by

Original approval obtained

Walter J. Barnett, Manager
USA/Shuttle DPS and Navigation Group

Contract NAS9-20000

This page intentionally blank

REVISION LOG

Rev. letter	Change no.	Description	Date
Basic		Biennial review completed and USA document number assigned; supersedes TD178	08/01/2003
A		Biennial review completed; updated for OI-30	08/02/2004
B	243	Biennial review and added final version statement due to the approaching end of the shuttle program	07/07/06

This page intentionally blank

LIST OF EFFECTIVE PAGES

The status of all pages in this document is shown below:

Page No.	Change No.
Foreword	Rev B
i – iv	Rev B
1-1 – 1-2	Rev B
2-1 – 2-12	Rev B
3-1 – 3-6	Rev B
4-1 – 4-8	Rev B
5-1 – 5-10	Rev B
6-1 – 6-6	Rev B
7-1 – 7-8	Rev B
A-1 – A-4	Rev B
B-1 – B-4	Rev B
C-1 – C-2	Rev B
D-1 – D-2	Rev B
E-1	Rev B

This page intentionally blank

FOREWORD

The contents of this document were provided by the Shuttle DPS and Navigation Training Department, Space Flight Training Division, Mission Operations Directorate (MOD), Lyndon B. Johnson Space Center (JSC), National Aeronautics and Space Administration (NASA). Any questions concerning this training manual or any recommendations should be directed to the training manual book manager, DT35/Christopher B. Edwards at 281-244-8466.

This material is for training purposes only and should not be used as a source of operational data. All numerical data, displays, and checklist references are intended as examples. To determine any prerequisites before using this document, consult the applicable Certification Plan. For shuttle manuals, consult the Flight Operations Support Personnel Training Guide (Blue Book) or the Crew Training Catalog. The applicable training package should be studied before attending any classroom session or lesson for which this is a prerequisite.

A Training Materials Evaluation is included at the end of this document. Inputs on this sheet will be used to evaluate the lesson material. You do not need to sign the sheet.

This page intentionally blank

CONTENTS

Section **Page**

1.0 AIR DATA SYSTEM OVERVIEW 1-1

2.0 AIR DATA SYSTEM HARDWARE 2-1
2.1 AIR DATA PROBE ASSEMBLIES 2-1
2.2 AIR DATA TRANSDUCER ASSEMBLIES 2-7
2.3 QUESTIONS 2-12

3.0 REDUNDANCY MANAGEMENT 3-1
3.1 PROBE RM 3-1
3.2 ADTA USABILITY STATUS 3-2
3.3 SELECTION FILTERING 3-2
3.3.1 Left Selection Filter (Left Probe Air Data) 3-2
3.3.2 Right Selection Filter (Right Probe Air Data) 3-2
3.3.3 Center Selection Filter (Selected Air Data) 3-2
3.4 ADS FDIR 3-3
3.5 ADS DILEMMA 3-4
3.6 QUESTIONS 3-6

4.0 ADTA SUBSYSTEM OPERATING PROGRAM 4-1
4.1 AIR DATA CALCULATIONS FOR GNC 4-2
4.2 ADTA / NAVDAD / DEFAD USAGE CONTROL 4-4
4.2.1 LEFT/RIGHT Air Data Calculations for the PFD 4-5
4.2.2 ADTA SOP OVERRIDE Display Calculations 4-6
4.3 QUESTIONS 4-7

5.0 AIR DATA DISPLAYS 5-1
5.1 GNC SYS SUMM 1 5-1
5.2 OVERRIDE (SPEC 51) 5-2
5.3 HORIZ SIT (SPEC 50) 5-3
5.4 RGA /ADTA / RCS (SPEC 41) 5-4
5.5 RCS / RGA /ADTA TEST (SPEC 102) 5-5
5.6 PRIMARY FLIGHT DISPLAY 5-7
5.7 HEAD-UP DISPLAYS 5-9
5.8 QUESTIONS 5-10

6.0 CREW PROCEDURES 6-1
6.1 PROBE DEPLOY AND AIR DATA MANAGEMENT 6-1
6.2 FCS CHECKOUT 6-3
6.3 FAULT MESSAGES 6-5
6.4 QUESTIONS 6-6

Section **Page**

7.0 BACKUP FLIGHT SYSTEM..... 7-1
7.1 PRE-ENGAGED VERSUS POST-ENGAGED 7-1
7.2 HARDWARE INTERFACE PROGRAM 7-1
7.3 OUTPUTS FOR GNC 7-3
7.4 DISPLAYS 7-3
7.5 CREW PROCEDURES..... 7-4
7.6 FAULT MESSAGES..... 7-6
7.7 QUESTIONS..... 7-7

Appendix

A ACRONYMS AND ABBREVIATIONS A-1

B ANSWERS B-1

C ADTA MODE/STATUS WORD C-1

D NAV-DERIVED AIR DATA AND DEFAULT AIR DATA D-1

E TRAINING MATERIALS EVALUATION E-1

TABLES

Table **Page**

4-1 Air data moding and outputs for GNC 4-4

7-1 BFS air data moding and outputs for GNC 7-3

FIGURES

Figure

1-1 ADS functional block diagram 1-2

2-1 Air data probe location 2-1
2-2 Typical probe 2-1
2-3 Probe/ADTA/MDM interface functional block diagram 2-2
2-4 Panel C3 ADS switches 2-4
2-5 Simplified air data electrical power diagram 2-5
2-6 Air data probe actuator diagram 2-6
2-7 ADTA avionics bay mounting location 2-7
2-8 ADTAs 1 and 3 installation in AV BAY 1, shown through middeck access 2-8
2-9 ADTA power interface functional block diagram 2-9
2-10 ADTA functional block diagram 2-11

3-1 ADS FDIR sample case 3-4
3-2 GNC SPEC 51 OVERRIDE display 3-5

4-1 ADTA SOP functional diagram 4-1
4-2 SPEC 51 OVERRIDE display 4-6

5-1 GNC SYS SUMM 1 display 5-1
5-2 OVERRIDE (SPEC 51) display 5-2
5-3 HORIZ SIT (SPEC 50) display 5-4
5-4 RGA /ADTA / RCS (SPEC 41) display 5-5
5-5 RCS/RGA/ADTA TEST (SPEC 102) display 5-6
5-6 Primary Flight Display above Mach 0.9 5-7
5-7 HUD display 5-9
6-1 Entry maneuvers cue card 6-2
6-2 ADTA management table 6-3
6-3 ADTA excerpts from FCS Checkout procedure 6-4

7-1 BFS ADTA HIP functional block diagram 7-2
7-2 BFS GNC SYS SUMM 1 display 7-4
7-3 POST BFS ENGAGE procedure 7-5

This page intentionally blank

1.0 AIR DATA SYSTEM OVERVIEW

The purpose of the Air Data System (ADS) is to provide information about the movement and position of the orbiter in the lower atmosphere. This information affects various functions performed by the shuttle onboard Guidance, Navigation, and Control (GNC) software. In addition, air data is available to the flight crew via flight instruments to assist the crew in monitoring and control of the orbiter. The ADS is designed to be used in GNC Major Modes 304, 305, 602, and 603. The ADS self-test, used to verify system health, is available in GNC OPS 8.

The ADS (Figure 1-1) consists of two deployable probes, one on each side of the orbiter nose, that sense four pressures: static (P_S), alpha center ($P\alpha_C$), alpha upper ($P\alpha_U$), alpha lower ($P\alpha_L$) and the temperature of the ambient atmosphere. These probes are connected by pneumatic lines to four Air Data Transducer Assemblies (ADTAs), which condition the sensed pressures and temperature measurements for use by GNC software. Information from each ADTA is transmitted to the orbiter General Purpose Computers (GPCs) via an associated Flight-Critical Forward (FF) Multiplexer/ Demultiplexer (MDM).

Each ADTA and its output undergoes a validation process to prevent the use of failed components or corrupted data. Additionally, since each of the ADTAs could supply all the required data, a selection process reduces the four input data streams to a single output. This function is performed by ADS Redundancy Management (RM) software.

Once a valid single air data output set is selected, the ADS Subsystem Operating Program (SOP) applies various algorithms to arrive at the air data parameters shown below for GNC software processing and crew display:

Angle of attack	α
Mach number	**M**
Dynamic pressure	$\bar{q}$
Corrected pressure altitude	H_{PC}
Equivalent Airspeed	**EAS**
True Airspeed	**TAS**

Various onboard software displays provide crew capability to incorporate air data into flight software GNC processing or to test, monitor, and reconfigure the ADS.

Portions of the Primary Flight Display (PFD), for both commander and pilot, can be driven with air data information. On this display, the flight instrument tapes can be driven with air data information from either probe or air data parameters derived from navigation data, depending on crew selection.

Each probe can be separately deployed or stowed by the crew from the flight deck using switches on panel C3.

Finally, electrical power to each ADTA is controlled by a dedicated circuit breaker located on the Flight Deck overhead circuit breaker panels.

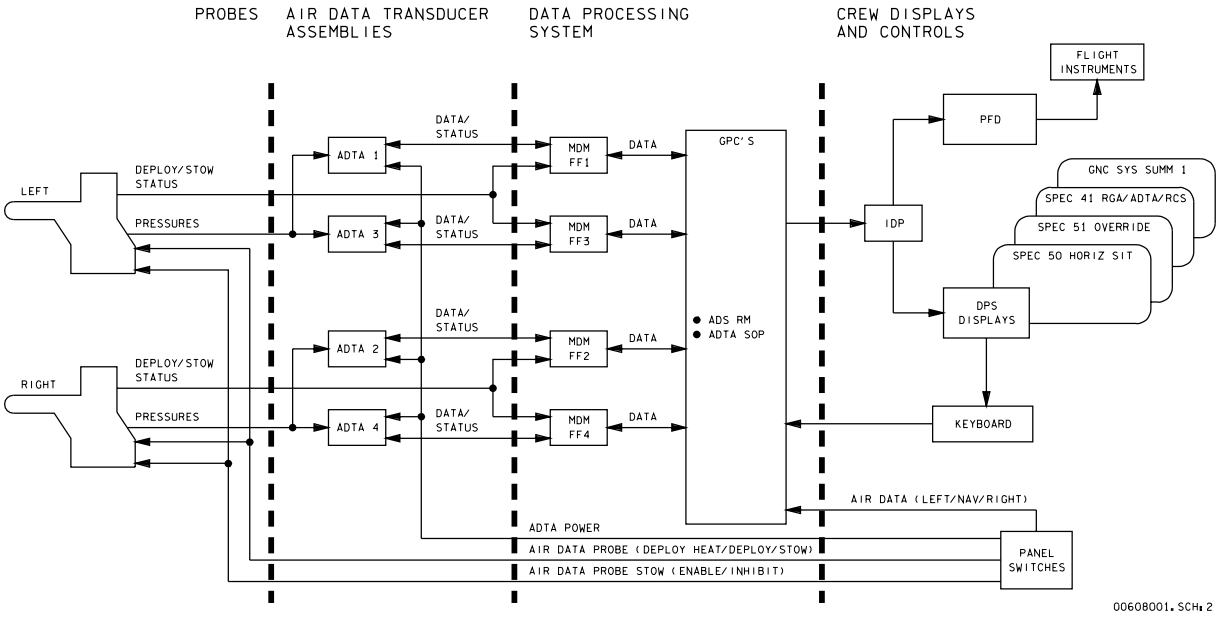

Figure 1-1. ADS functional block diagram

2.0 AIR DATA SYSTEM HARDWARE

2.1 AIR DATA PROBE ASSEMBLIES

The air data probes are located on each side of the orbiter nose (Figure 2-1). Each probe is composed of a pressure head, Total Temperature (T) head, mast, and heaters. The pressure head consists of four ports, which sense $P\alpha_C$, $P\alpha_U$, $P\alpha_L$, and P_S (Figure 2-2). Stagnation temperature, or T, is provided by dual temperature-sensitive resistive elements located at the interface with the actuator subsystem. Each probe contains heaters that can be activated as required to keep the probes free of ice, but typically are not used in the current operational environment of the orbiter.

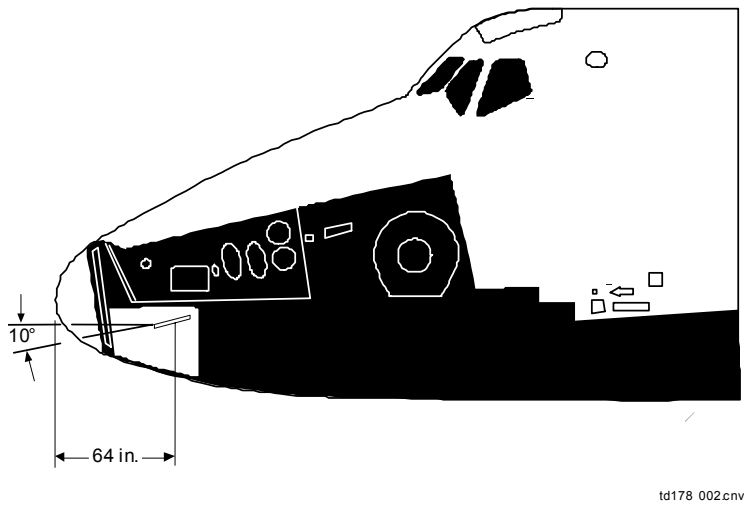

Figure 2-1. Air data probe location

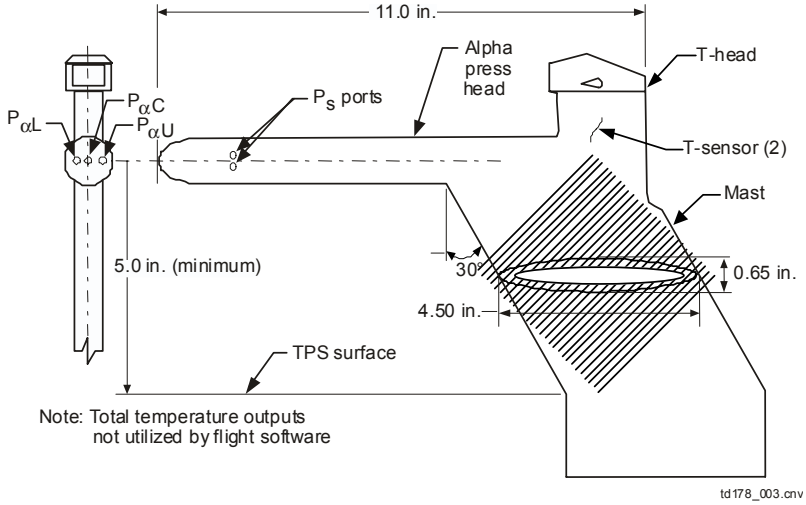

Figure 2-2. Typical probe

The left air data probe provides identical pressure information over pneumatic lines to ADTAs 1 and 3 (Figure 2-3). ADTAs 2 and 4 receive identical pressure information via

pneumatic lines from the right air data probe. The probes sense pressure information continuously; however, the ADTAs sample and update this data only every 40 msec.

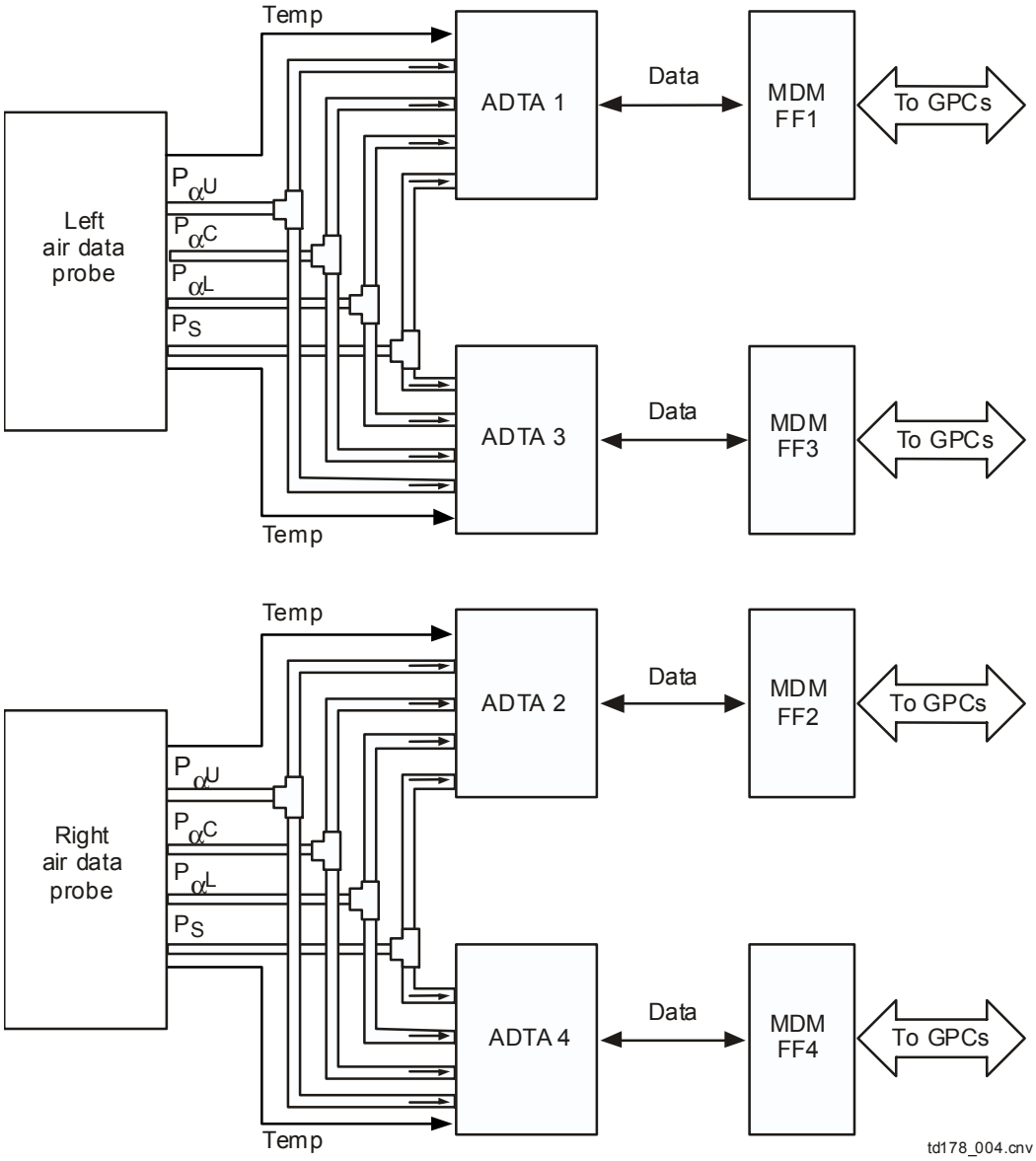

Figure 2-3. Probe/ADTA/MDM interface functional block diagram

Listed below are some of the air data system hardware performance data and operational limitations:

a.	Performance envelope	
	1. Altitude	0 to 105,000 ft
	2. Mach number	0.1 to 3.5
	3. Angle of attack	-4° to +20°
	4. Max temperature	850° F
b.	Probe deploy time	
	1. Two motors	15 sec
	2. One motor	30 sec
c.	Maximum probe actuator load	375 lb/ft^2
d.	ADTA warmup time	3 seconds
e.	ADTA operating temperature	-20° to 120° F
f.	Power	
	1. Probe heaters	1300 W per probe (max.)
	2. ADTA	12 W per ADTA

The air data probes are independently deployed by moving the AIR DATA PROBE switches to the DEPLOY position (Figure 2-4). A deploy request results in closure of the dual series relays in the Forward Motor Control Assemblies (FMCAs), flowing three-phase ac power to the probe motors (Figure 2-5). The motors, through differential gearing, are mechanically linked to an actuator (Figure 2-6), which rotates the probe outward so that it faces forward. With both motors active, a probe deploys in 15 seconds (dual-motor time). In the event of a motor failure on a given side, a probe deploys in 30 seconds (single-motor time).

The probe actuators contain Limit Switches (LSs) that indicate whether a probe is stowed or deployed. The stow LSs open immediately as the probe actuator arm begins to move. When the probe is fully deployed, the arm of the actuator trips the deploy LSs, signaling the FMCAs to open the relays and remove power from the motors. In addition, the GPCs use the LS status to determine whether data from a probe, via the ADTAs, can be processed by GNC software and provided to the Primary Flight Display (PFD).

Positioning the AIR DATA PROBE switches in DEPLOY/HEAT allows one set of series relays in the Forward Power Control Assemblies (FPCAs) to close. When the probe is fully deployed, the same signal used to open the motor relays is also used to close a second set of series relays in the FPCAs, sending power to the heaters.

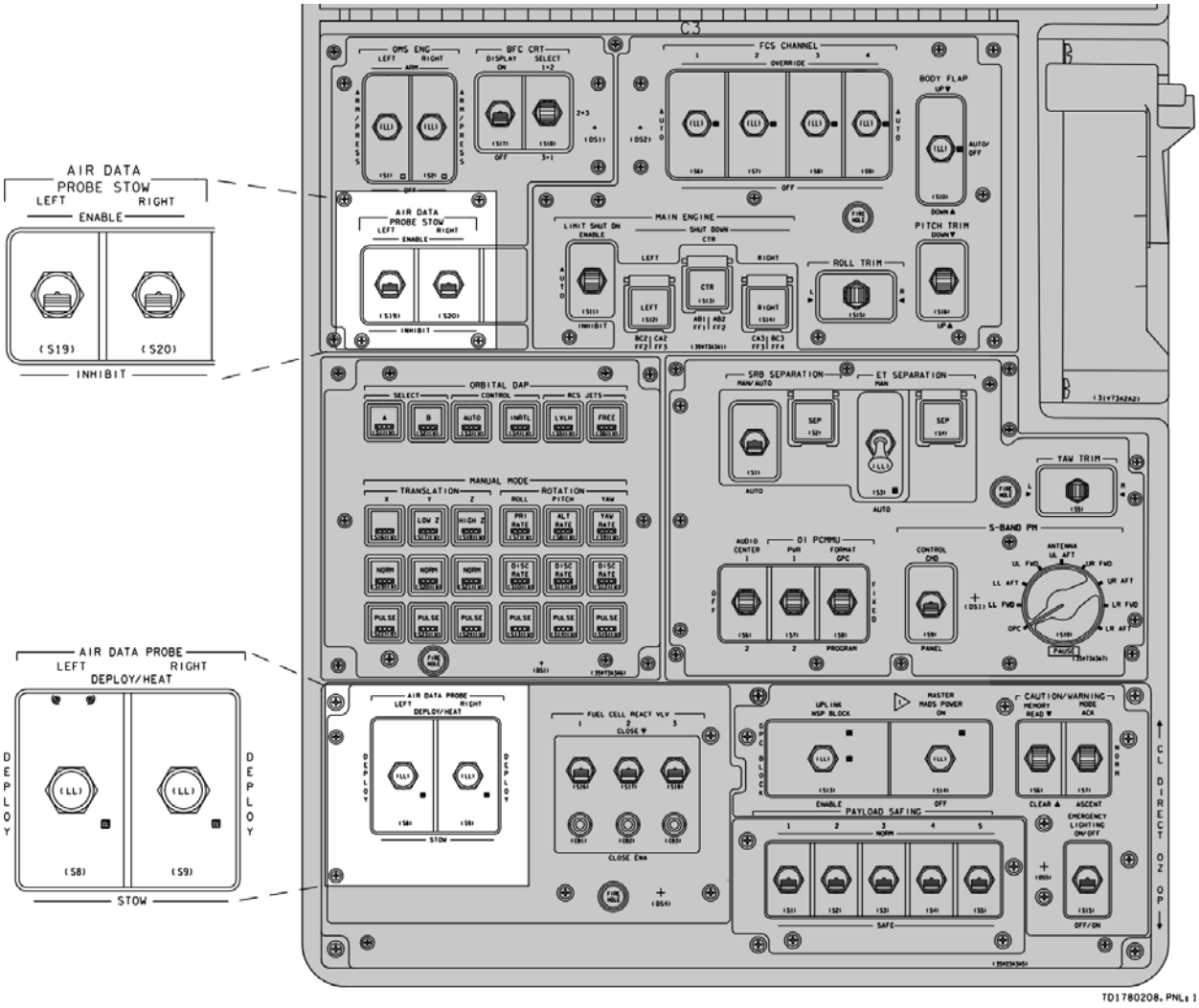

Figure 2-4. Panel C3 ADS switches

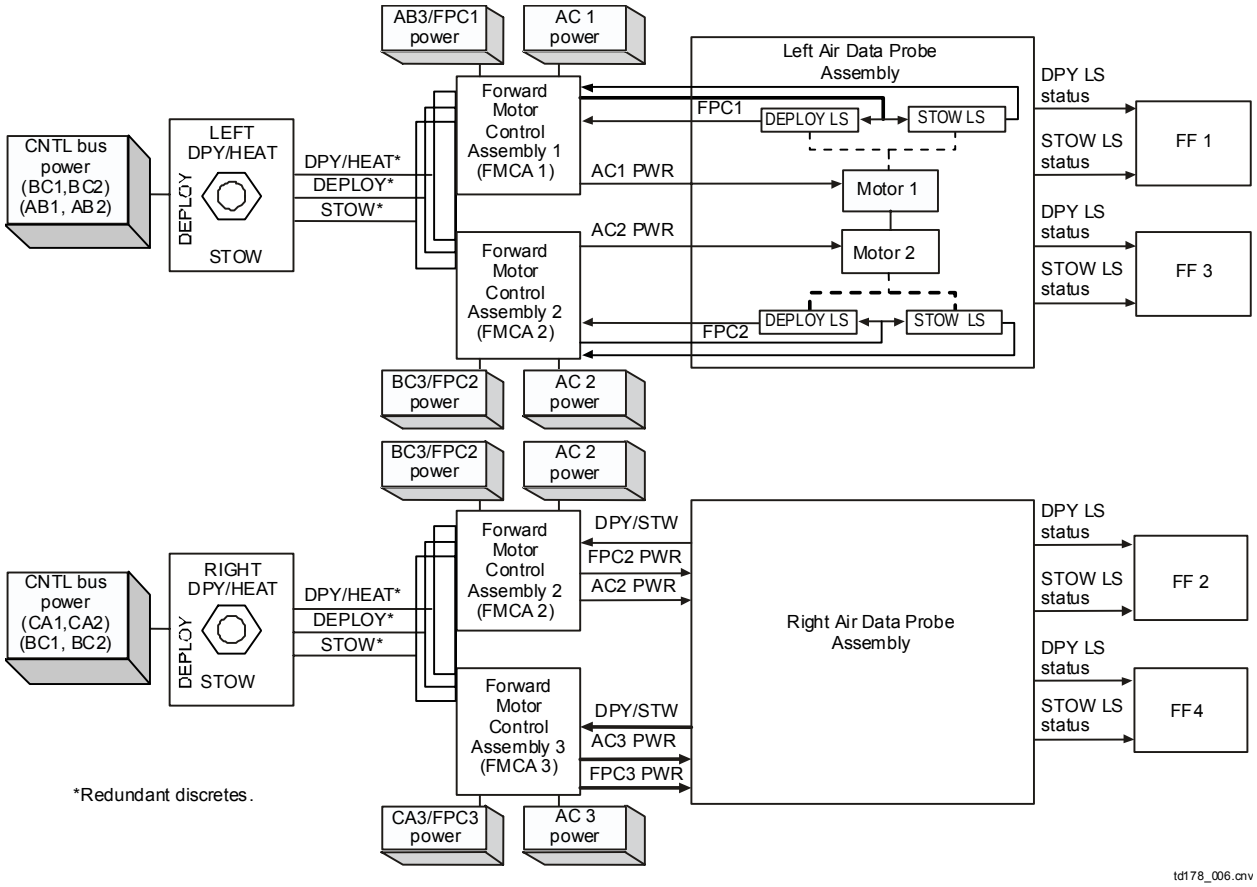

Figure 2-5. Simplified air data electrical power diagram

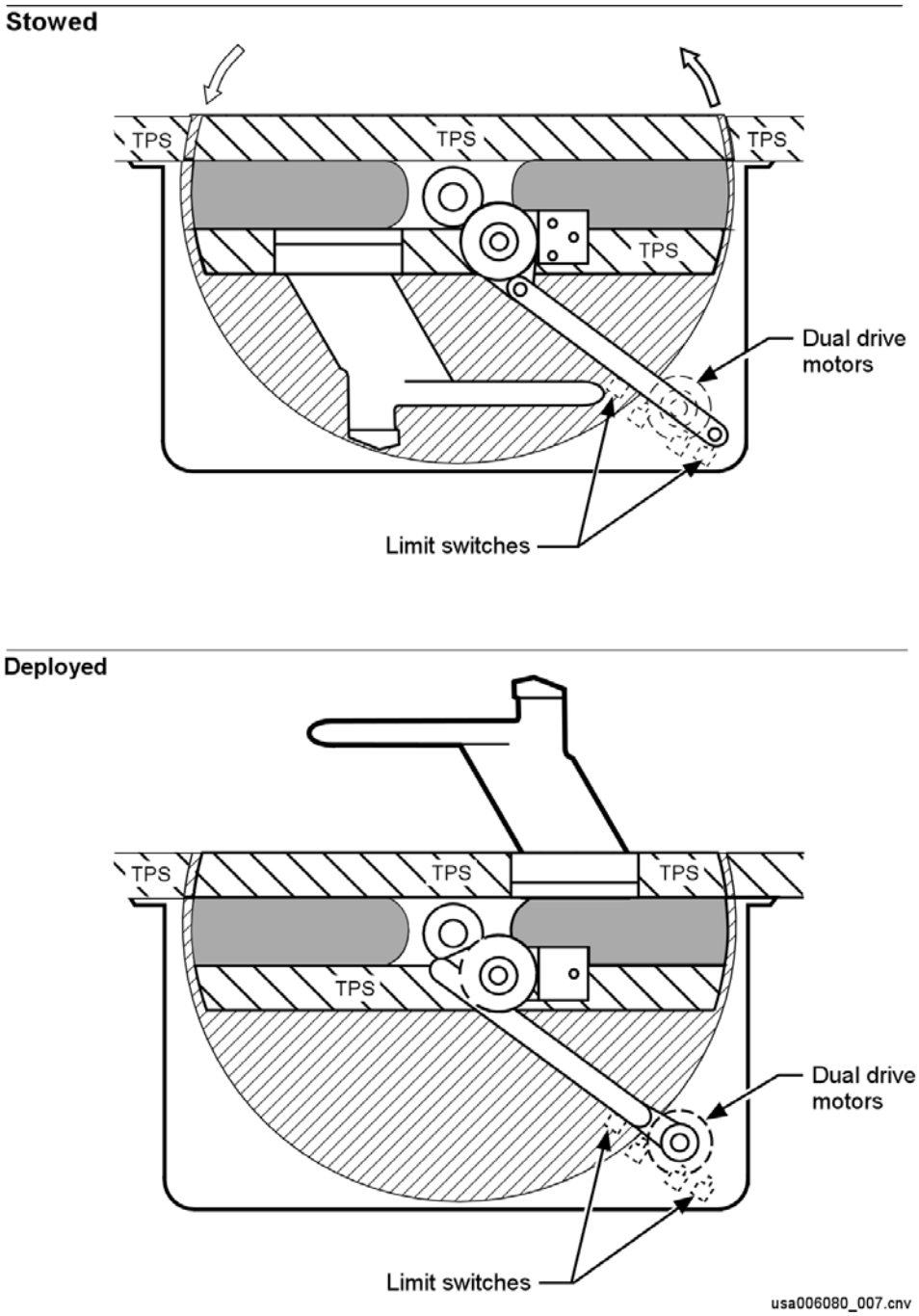

Figure 2-6. Air data probe actuator diagram

Stowing the probes is accomplished in a similar manner. A second switch, AIR DATA PROBE STOW, must be in the ENABLE position for the probe switch to operate in the STOW position. The only other difference for stowing is that two phases of the AC motors are reversed.

The AIR DATA PROBE switches contain redundant paths so that a single failed electrical bus to the switch or a failed switch contact does not cause the loss of operational capability to deploy a probe. Each switch is a three-position, lever-lock switch.

2.2 AIR DATA TRANSDUCER ASSEMBLIES

The ADTAs are located in the forward avionics bays and are cooled by circulating air supplied by the Environmental Control and Life Support System (ECLSS) (Figure 2-7 and Figure 2-8). The Line Replaceable Unit (LRU) has air inlet and outlet ducts. Air circulates through each ADTA but does not flow directly over electronic components, only over adjacent materials that act as a heat sink for the electronics.

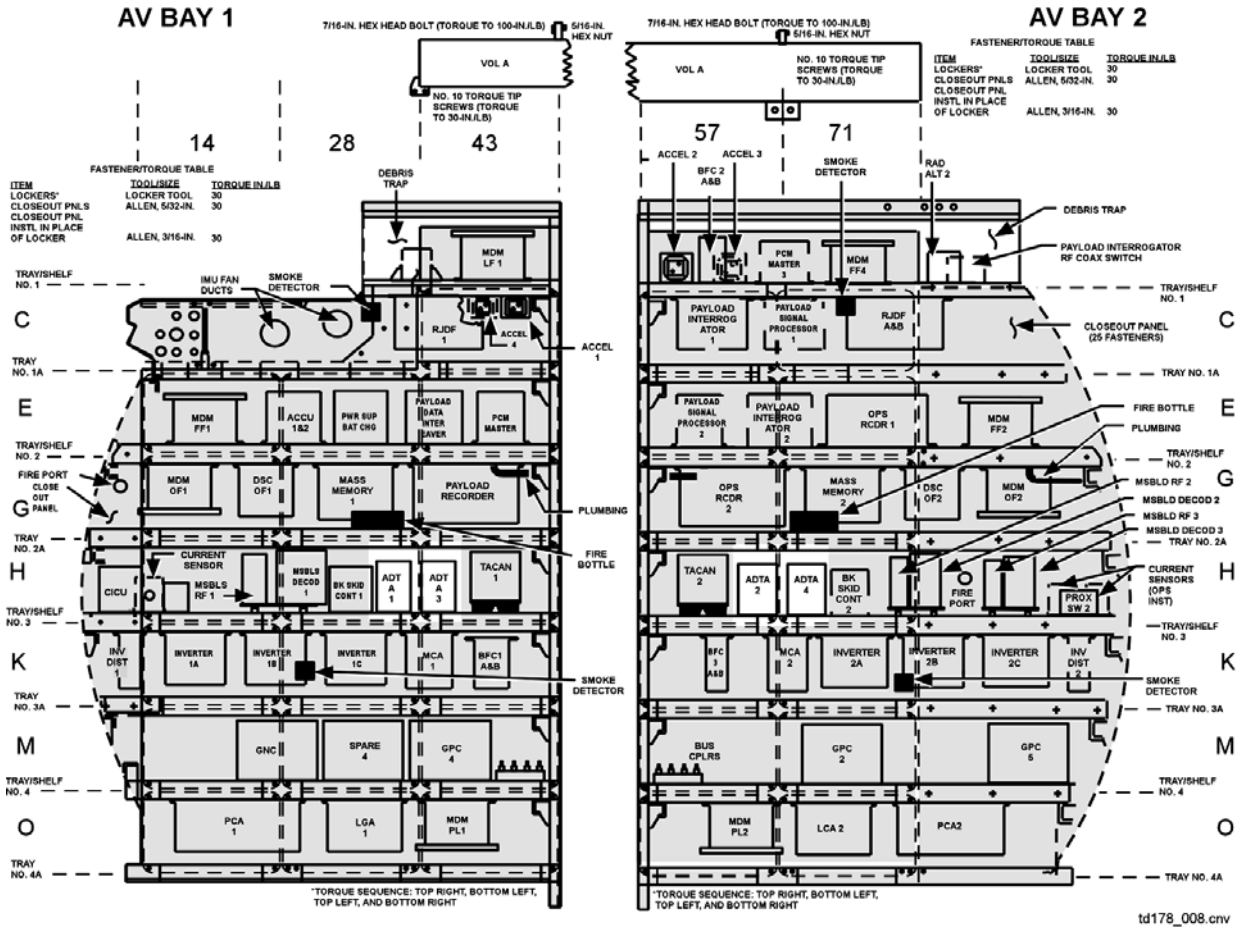

Figure 2-7. ADTA avionics bay mounting location

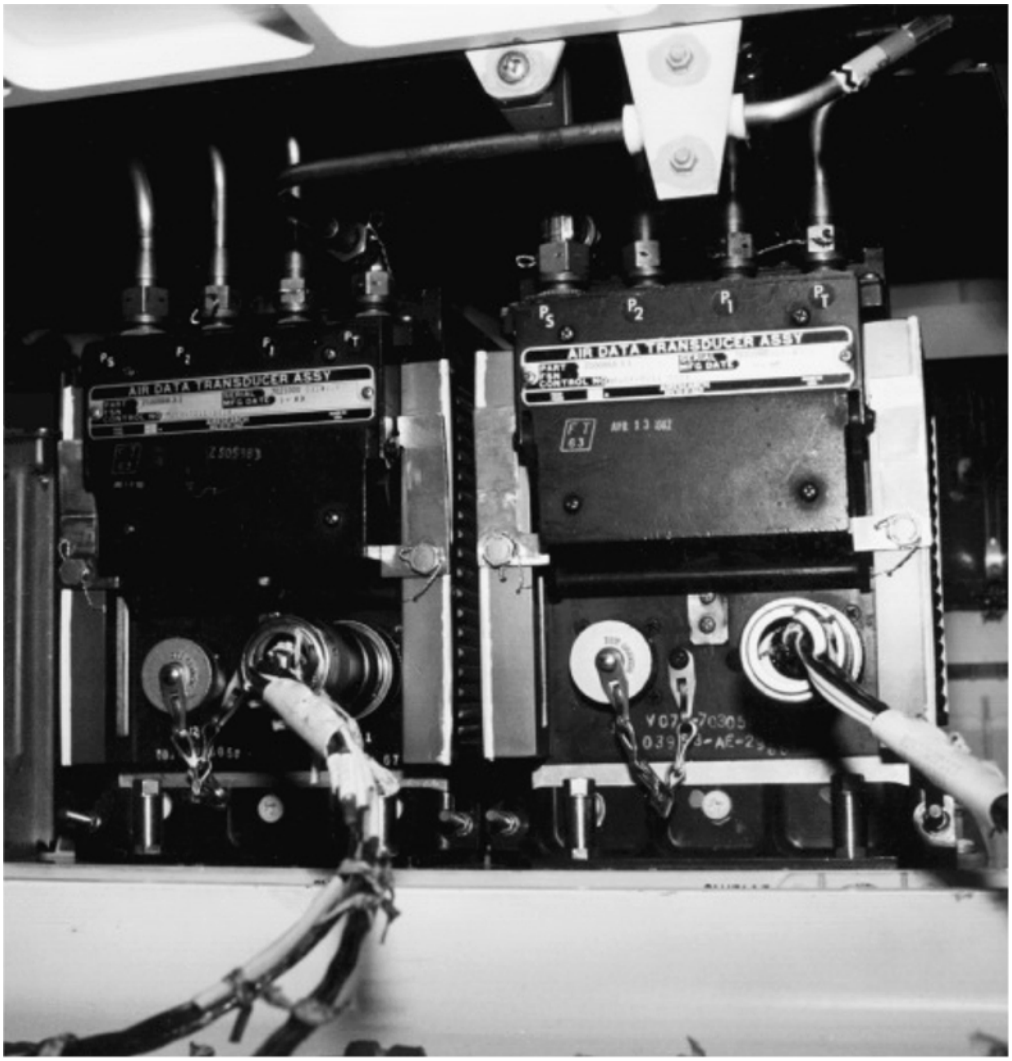

Figure 2-8. ADTAs 1 and 3 installation in AV BAY 1, shown through middeck access

Each ADTA receives 28 V dc power from one of the three orbiter electrical main buses. Circuit breakers on MN A PNL O14 (ADTA 1), MN B PNL O15 (ADTA 2), and MN C PNL O16 (ADTAs 3 and 4) apply power to the ADTAs when closed. A parallel line provides a separate ADTA POWER-ON indication to the ADTA's associated MDM (Figure 2-9). This indication is accessed by telemetry but not used by GNC flight software. Division of the main bus electrical power to the ADTAs ensures that a single bus failure will not cause loss of data from an entire probe. For example, if MN C is unpowered, ADTAs 3 and 4 do not operate, but left and right side air data information is still provided by ADTAs 1 and 2. Any time an ADTA is not powered, software bypasses the unit with a commfault.

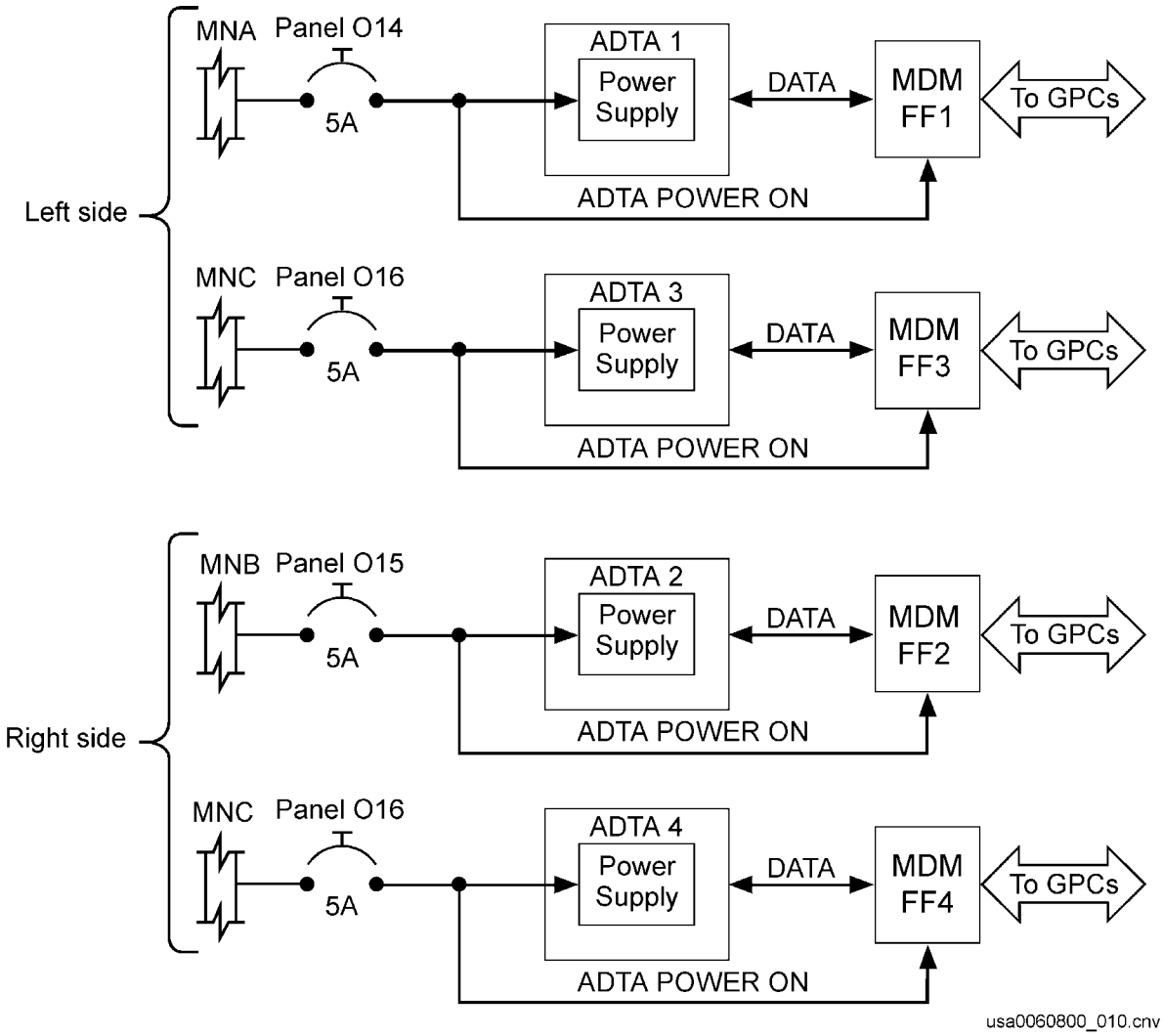

Figure 2-9. ADTA power interface functional block diagram

Each ADTA (Figure 2-10) consists of four transducers, a calibration and Built-in Test Equipment (BITE) processor, a temperature bridge, an Analog/Digital (A/D) converter, a power supply, and a digital output circuit.

a. Transducer - Receives the raw sensed pressures and contains the data used by the digital processor to linearize and correct the probe-sensed measurements (via transducer electronics)

b. Temperature bridge circuit - Converts probe-sensed resistive measurements to an analog signal

c. A/D converter - Digitizes all analog signals

d. Power supply - Provides the 5-, 10-, and 15-volt power required to operate the various components

e. Digital output circuit - Stores the results of a computational cycle and transmits upon MDM request

f. Digital processor - Provides timing and control for each ADTA computational cycle and contains pressure, temperature, and BITE algorithms

Pressures sensed by the transducer are converted into a serial digital signal and sent to the digital processor. The transducer temperature and calibration data are also sent via A/D converter to the digital processor, which then linearizes and corrects the sensed pressure measurement.

BITE is an integral part of the ADTA processor logic. It performs various tests to determine the status of the internal components. Some BITE processing is continuous while an ADTA is powered; however, some special-purpose BITE functions apply only during the period in which an ADTA undergoes self-test (as is done on orbit during the GNC OPS 8 FCS checkout).

The results of continuous and/or self-test BITE status are reflected in a separate MODE /STATUS word (16 bits) for each ADTA (refer to Appendix C for the composition of this word). All the various BITE functions are described in the following lists:

a. Continuous BITE functions

   1. Reasonableness test (rate of change) on pressure and temperature measurements received from the probe
   2. Reasonableness tests on hardware components (e.g., power supply, A/D conversion)
   3. Internal processor checks (e.g., arithmetic computation)

b. Self-test BITE functions

   1. Determines if a valid self-test command exists
   2. Cross-compares each pressure measurement within an ADTA
   3. Outputs a prestored set of pressures and temperatures in response to a self-test command

At the end of each computational cycle, P_S, $P_{\alpha C}$, $P_{\alpha U}$, $P_{\alpha L}$, temperature and the MODE/ STATUS word are transferred to the output circuit, and the next cycle begins.

Primary Avionics Software System (PASS) GNC software uses the BITE results for OPS 8 display only. The Backup Flight System (BFS) GNC software does not use the results of BITE directly, but certain bits of the MODE/STATUS word are used to automatically remove an affected unit from availability. The ADS in the BFS is discussed in detail in Section 7.

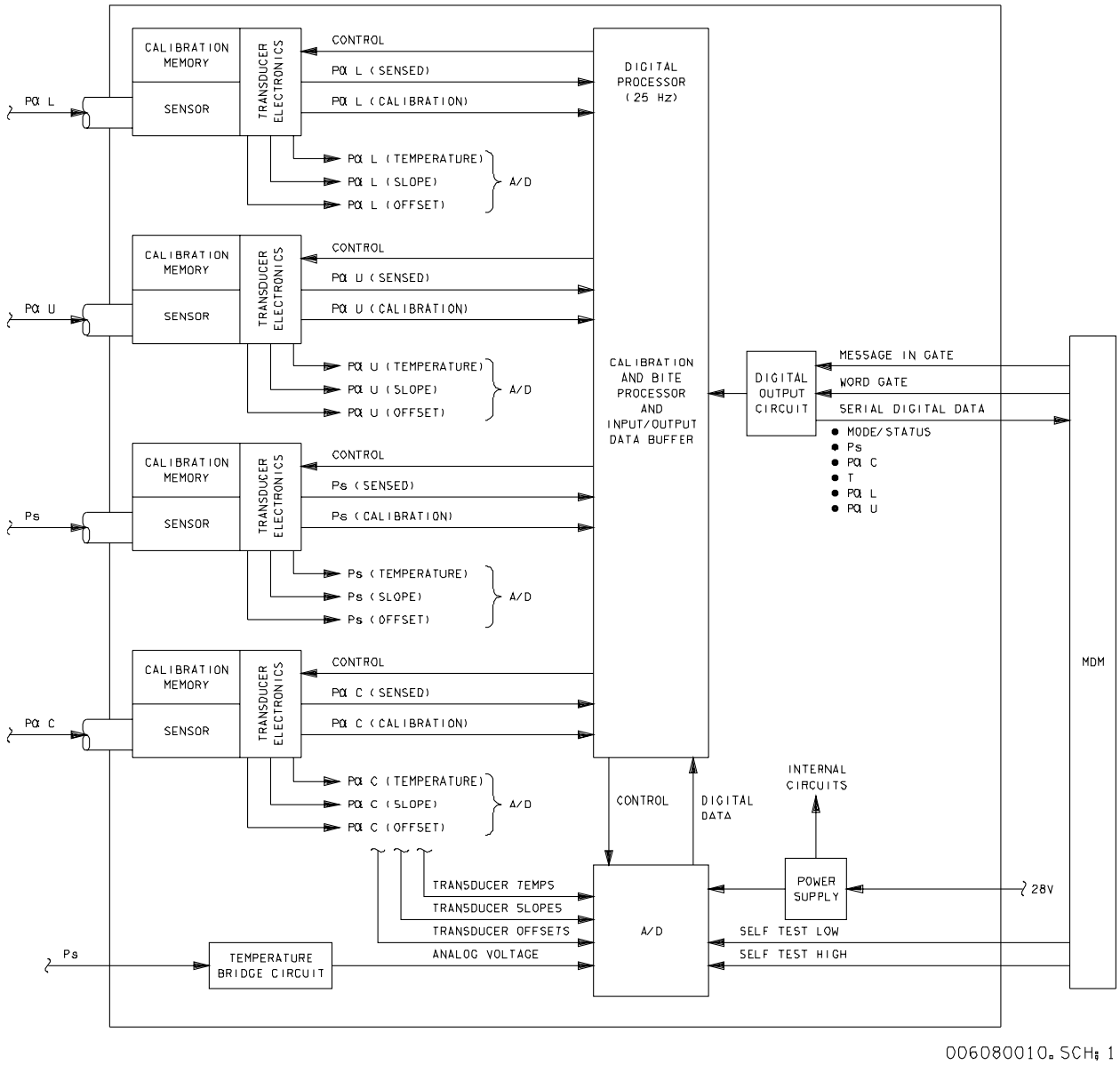

Figure 2-10. ADTA functional block diagram

2.3 QUESTIONS

1. Identify the four pressures sampled by each probe and fed to the ADTAs.
2. How many switch throws are required to stow a probe? What are they?
3. Which ADTAs receive pressures sensed by the right probe? By the left probe?
4. What is the maximum velocity for processing probe-sensed pressures?
5. What is the response of PASS software to detection of an ADTA BITE?
6. How are the ADTAs powered?
   (a) CNTL bus power
   (b) AC power
   (c) Main bus power
   (d) Essential bus power
7. How are the air data probe motors powered?
   (a) CNTL bus power
   (b) AC power
   (c) Main bus power
   (d) Essential bus power

3.0 REDUNDANCY MANAGEMENT

ADS RM is the area of GNC software that assesses the validity of the air data probes and ADTA outputs. This validation process ensures the quality of the data passed to the ADTA SOP for use in the computation of air data parameters. ADS RM includes

a. Selection filtering

b. Fault Detection, Identification, and Reconfiguration (FDIR)

c. Transient testing

d. Data conversion

e. Flagging dilemma conditions

ADS RM is active in GNC Major Modes 304, 305, 602, and 603.

3.1 PROBE RM

ADTA SOP and RM processing are keyed to probe status. Redundant DEPLOY and STOW indications are provided from the probe limit switches. There is a valid deploy condition when the logic associated with either set of discretes for a given probe is satisfied.

a. DEPLOY discrete no. 1 is true and not commfaulted and STOW discrete no. 1 is false and not commfaulted

or

b. DEPLOY discrete no. 2 is true and not commfaulted and STOW discrete no. 2 is false and not commfaulted

Note that these four discretes are divided into two specific sets, one of which must match the above condition for the software to consider a probe deployed; e.g., DEPLOY no. 1 true and STOW no. 2 false do not satisfy the discrete logic for a deployed condition.

ADS RM and ADTA SOP will not be processed until at least one probe is deployed; therefore, an EITHER PROBE DEPLOYED flag must be generated. This flag will go true when both probes are deployed or when a single probe has been deployed for 15 seconds. The 15-second timer delays ADTA SOP and ADS RM processing as protection against a deploy limit switch failure prior to probe deployment. For such a failure, the software would consider the probe deployed at the moment the crew moved the AIR DATA PROBE switch to DEPLOY when, in fact, it takes it at least 15 seconds (dual-motor time) for the probe to reach the fully deployed position.

Once the EITHER PROBE DEPLOYED flag has been set, it will be latched for the remainder of the flight.

3.2 ADTA USABILITY STATUS

The output (sensed pressures) from each individual ADTA must satisfy four conditions before it can be considered valid for use by ADS RM and ADTA SOP:

a. Corresponding air data probe considered deployed by software

b. Corresponding ADTA not manually deselected (via Data Processing System (DPS) display)

c. Corresponding ADTA not commfaulted

d. No parameters (P_S, $P_{\alpha C}$, $P_{\alpha U}$, $P_{\alpha L}$) failed by FDIR

3.3 SELECTION FILTERING

Using inputs from the available ADTAs, the RM software must create three output data sets for transfer to the ADTA SOP: "left probe data," "right probe data," and "selected data." Left and right probe data can be seen by the crew on the flight instruments, located on the PFD (Section 5). Selected data is processed by the ADTA SOP for air data parameters used by GNC flight software. These three data sets are determined by the following selection filters:

3.3.1 Left Selection Filter (Left Probe Air Data)

a. Both ADTAs considered usable – Outputs averaged

b. One ADTA considered usable – Single output used

c. Neither ADTA considered usable (e.g., ADTAs 1 and 3 deselected) – ADTA 1 output used if available; otherwise, ADTA 3 output used for display purposes

3.3.2 Right Selection Filter (Right Probe Air Data)

a. Both ADTAs considered usable – Outputs averaged

b. One ADTA considered usable – Single output used

c. Neither ADTA considered usable (e.g., ADTAs 2 and 4 deselected) – ADTA 2 output used if available; otherwise, ADTA 4 output used for display purposes

3.3.3 Center Selection Filter (Selected Air Data)

a. Both probes considered usable – Average of right and left selection filters

b. One probe considered usable – Output data from the selection filter of that probe

c. Neither side considered usable – RM dilemma declaration

3.4 ADS FDIR

The purpose of ADS FDIR is to determine if any of the four pressures (P_S, $P_{\alpha C}$, $P_{\alpha U}$, $P_{\alpha L}$) from each of the available ADTAs should be declared failed and to reconfigure the selection filters accordingly. This process consists of a comparison of left probe pressures (ADTAs 1 and 3), a comparison of right probe pressures (ADTAs 2 and 4), and a probe-to-probe comparison. These comparisons are performed continuously and include a transient test to protect data transients from being passed along to GNC software. In addition, comparisons of ADTAs 1 and 3 with the right probe or ADTAs 2 and 4 with the left probe are performed only if the same-side comparisons have exceeded the threshold values three consecutive times (see sample case, Figure 3-1). Declaring a pressure failed results in fault annunciation and FDIR downmoding of the entire ADTA.

The threshold values for the same-side comparison test are constants:

a. P_S = 0.10 in. Hg

b. $P_{\alpha C}$ = 0.064 in. Hg

c. $P_{\alpha U}$ = 0.10 in. Hg

d. $P_{\alpha L}$ = 0.10 in. Hg

The side-to-side threshold values, however, vary as a function of Mach number and estimated sideslip.

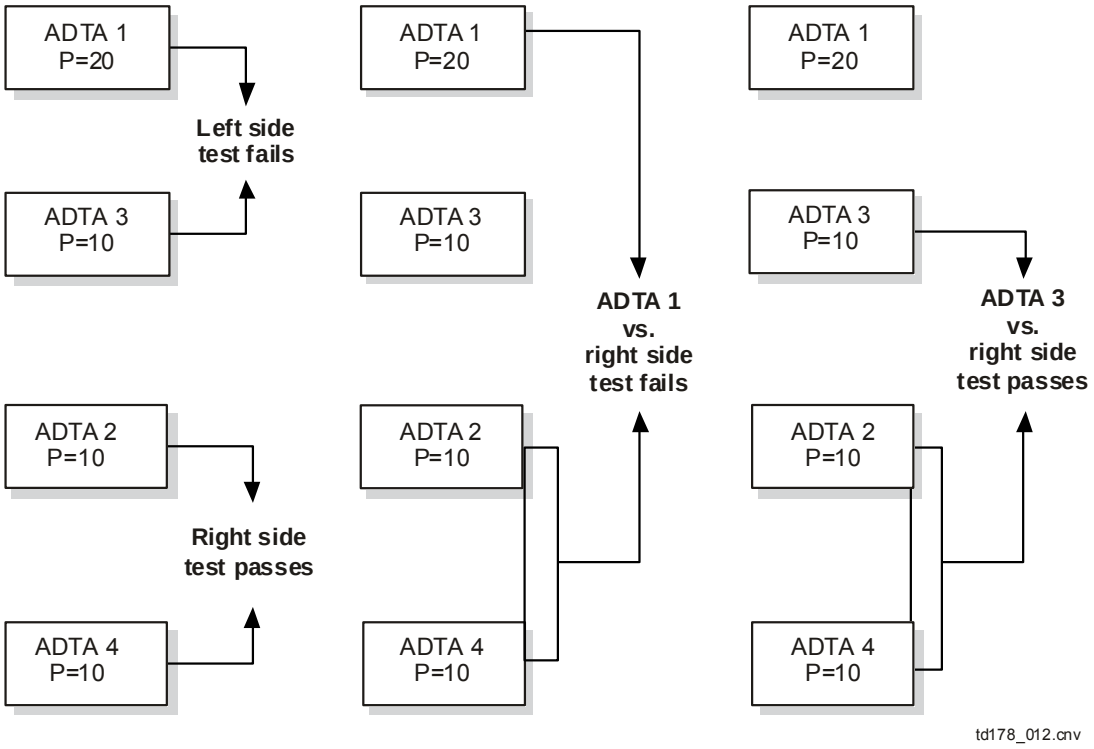

Figure 3-1. ADS FDIR sample case

3.5 ADS DILEMMA

A dilemma is a detected fault that has no possibility of being isolated because the only two sources of data that are available disagree. The conditions for which a dilemma will be declared are summarized as follows:

Left side (usable)	Right side (usable)	Dilemma logic
Both ADTAs	Both ADTAs	Side-to-side test failed
Both ADTAs	One ADTA	Side-to-side test failed
One ADTA	Both ADTAs	Side-to-side test failed
One ADTA	One ADTA	Side-to-side test failed
Both ADTAs	No ADTAs	Same-side test failed
No ADTAs	Both ADTAs	Same-side test failed
No ADTAs	No ADTAs	Automatic dilemma

Note: An exception to the above table occurs in the Mach jump region, where no side-to-side test is performed on P_S because of air pressure instability.

When a dilemma is declared, the ADTA SOP stops processing measured air data for GNC and begins incorporating Navigation-Derived Air Data (NAVDAD) or Default Air Data (DEFAD), both of which are described in detail in Appendix D. The ADTA SOP continues processing measured air data for the flight instruments, regardless of an RM dilemma. FDIR informs the crew of the RM status via ADTA fail flags (GNC SYS SUMM) and the ADS dilemma flag (GNC SYS SUMM and F7 C&W matrix).

The crew interfaces with ADS RM via the SELECT/DESELECT item entries on the GNC OVERRIDE display (SPEC 51) (Figure 3-2). If an ADTA is manually deselected, it is not used by RM. When an ADTA has been automatically deselected by RM, this status is latched until the crew resets it by reselecting the failed ADTA on SPEC 51.

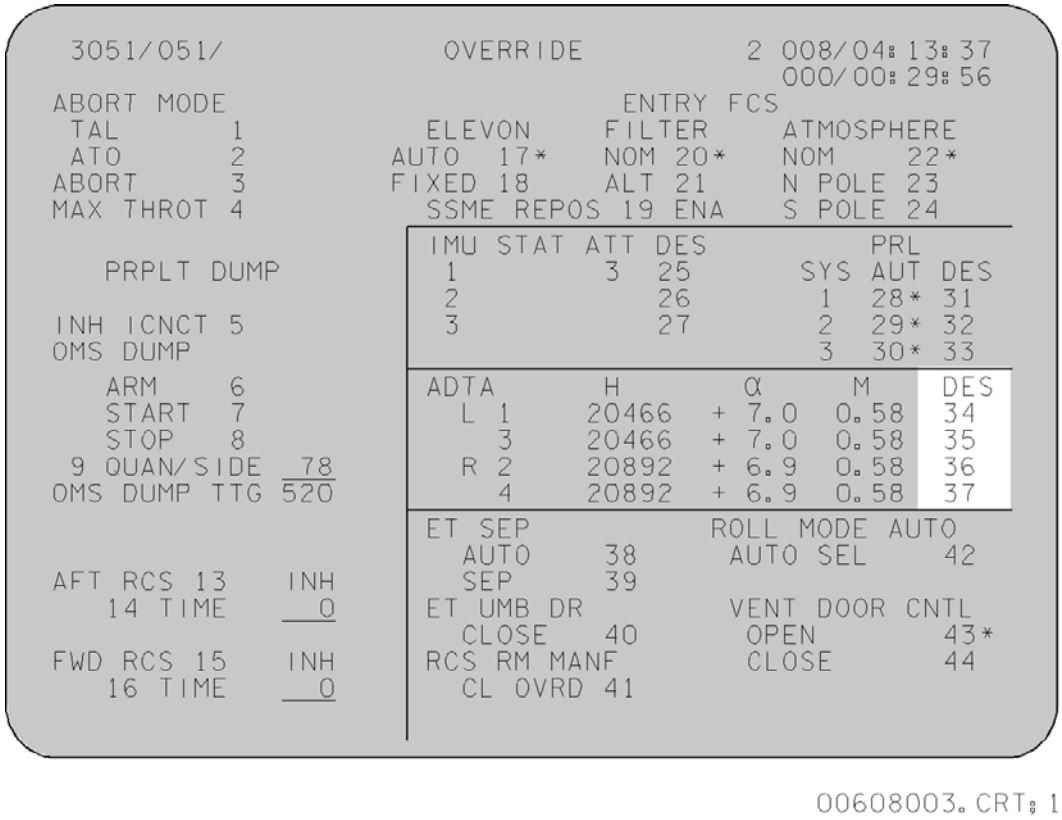

Figure 3-2. GNC SPEC 51 OVERRIDE display

3.6 QUESTIONS

1. What part of RM software assesses data validity by comparing sensed pressures to one another?

   (a) Selection filtering

   (b) ADTA usability status

   (c) FDIR

2. If ADTA 2 is not available, describe how ADS RM would use data from the remaining ADTAs to determine values for left probe air data, right probe air data, and selected air data.

3. Under what conditions would ADS RM <u>not</u> consider a deployed probe to be usable?

4. Describe the data miscompare conditions that can result in a dilemma declaration by ADS RM.

4.0 ADTA SUBSYSTEM OPERATING PROGRAM

The purpose of the ADTA SOP is either to calculate air data parameters from ADTA-supplied pressures or to throughput similar parameters derived from other software sources. These parameters are provided for GNC, flight instruments, ADS RM, and the SPEC 51 OVERRIDE display.

The SOP receives left, right, and center selection filter pressures (Figure 4-1) in addition to probe deploy status from RM. RM also supplies data good and dilemma indications for use by the SOP to determine its set of air data output for GNC. Separate crew controls are provided for incorporation of air data to flight software guidance and control and/or navigation via item entries on the SPEC 50 HORIZ SIT display (see Section 5). For periods when probe-sensed data cannot be used, the SOP throughputs air data parameters based on NAVDAD.

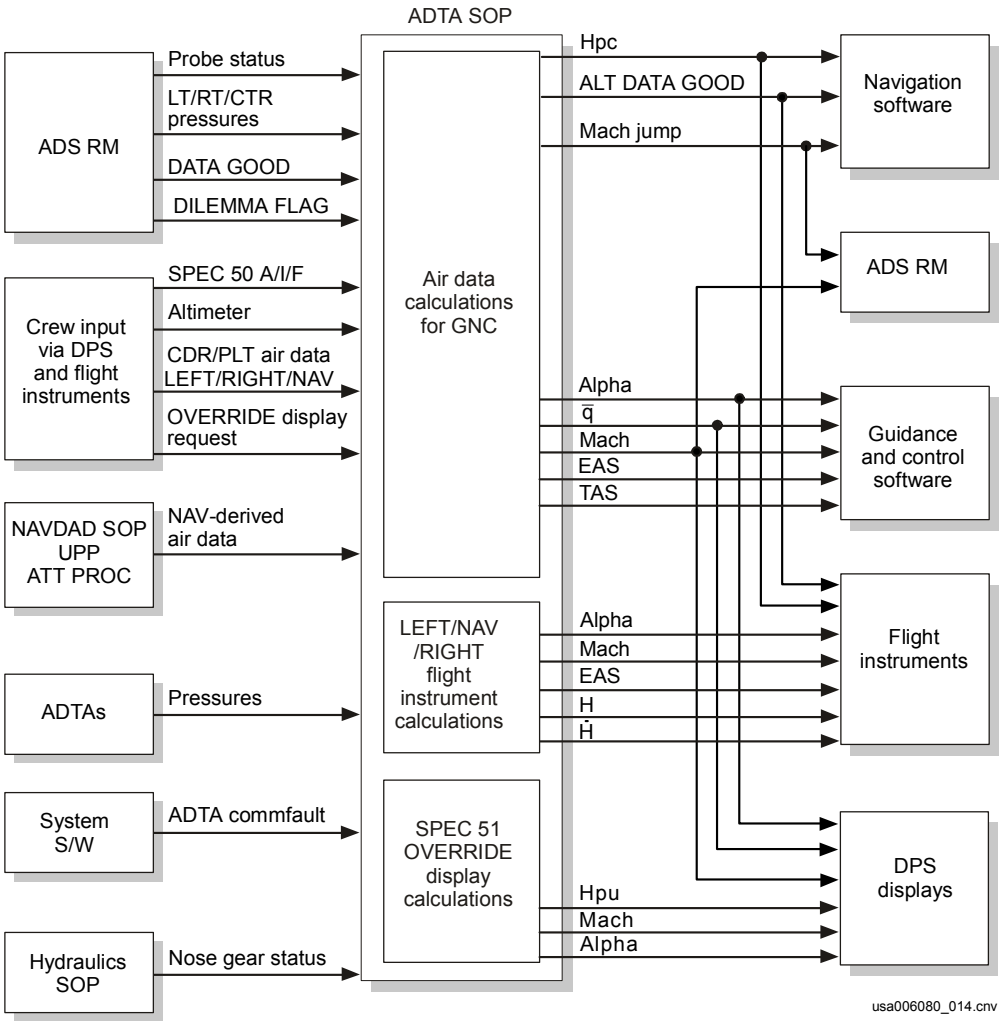

Figure 4-1. ADTA SOP functional diagram

Finally, the ADTA SOP provides Mach number feedback and a Mach jump flag to ADS RM for various FDIR functions. Air data switch RM provides indications of switch requests for the Commander (CDR) and Pilot (PLT) flight instruments. The ADTA SOP is active in GNC Major Modes 304, 305, 602, and 603.

4.1 AIR DATA CALCULATIONS FOR GNC

The probe-sensed air data parameters for GNC are calculated by ADTA SOP, based on the RM center selection filter outputs that usually reflect the average of the left and right P_S, $P\alpha_C$, $P\alpha_U$, and $P\alpha_L$. Calculations using these inputs are initiated whenever either probe is considered deployed, the ADTA data good flag is set, and the dilemma flag is not set. The ADS calculations require about four computational cycles (~4 sec) to converge to steady state values, and the results are limited by the software to maximum and minimum values. The following parameters are computed in this process:

a.	Dynamic pressure ($\bar{q}$, lb/ft^2)	14.8	$\leq$	$\bar{q}$	$\leq$	375
b.	Angle of attack (α, deg)	-4.0	$\leq$	α	$\leq$	20
c.	Mach number (M)	0.1	$\leq$	M	$\leq$	3.5
d.	True Airspeed (TAS, ft/s)	112	$\leq$	TAS	$\leq$	3436
e.	Equivalent Airspeed (EAS, ft/s)	112	$\leq$	EAS	$\leq$	562
f.	Corrected pressure altitude (H_{PC}, ft)	0	$\leq$	H_{PC}	$\leq$	105,000

Of the above parameters, all except H_{PC} are used by the guidance and control software modules during entry, including the cornerstone guidance algorithms (Entry, Terminal Area Energy Management (TAEM), Approach/Landing) and the Aerojet Digital Autopilot (DAP). H_{PC}, however, is the only parameter furnished to navigation software and is not used by guidance and control. This parameter is accompanied by a timetag used to filter H_{PC} into the NAV estimate of the orbiter state vector, which is based on time-stepped integration of the equations of motion.

“Corrected” means that atmospheric pressure and temperature are both considered in the altitude computation. Since probe-sensed temperature is never used, the software must generate an estimate of free-stream temperature for the TAS computation. This is accomplished by algorithms, which describe the 1962 US Standard Atmosphere as a function of altitude.

The following atmospheric layers and associated constants are used:

Atmospheric layer	Layer base altitude (km)	Layer base temp (K)	Layer temp gradient (K/km)
0 km ≤ Alt ≤ 11 km (36,089 ft)	0	288.15	-6.5
11 km < Alt < 12 km (65,617 ft)	11	216.65	0.0
20 km < Alt < 32 km (105,000 ft)	20	216.65	1.0

The temperature is then corrected to account for expected seasonal variations in the temperature-lapse rates above a given landing site.

The H_{PC} is based on the uncorrected pressure altitude (H_{PU}) derived from the US '62 atmosphere, which is then corrected in a manner similar to that described for temperature. These corrections are applied until H_{PU} reaches 12000 feet; at this point the altimeter input from the SPEC 50 HORIZ SIT display is used to bias the standard atmosphere-derived altitude for the final approach and landing.

The ADTA SOP outputs H_{PC} for use by navigation software whenever ADS RM provides a data good discrete for air data; i.e., at least one probe is deployed and a healthy ADTA is associated with the deployed probe. Navigation software, however, has an additional requirement that SPEC 50 ADTA H be set to AUTO or FORCE before pressure altitude is processed. If in AUTO, H_{PC} will be processed by NAV when orbiter velocity slows to below Mach 2.5 (except during Mach jump). In FORCE, however, H_{PC} is processed above Mach 2.5 as long as the same RM data good requirements are met, and velocity is below Mach 3.5..

The ADTA SOP also outputs additional flags used by navigation software and ADS RM for moding air data processing:

a. ALTITUDE DATA GOOD (ALT_DG)

   1. Signals the navigation software when H_{PC} is available for use

   2. Virtually identical to ADTA DATA GOOD flag sent by RM to the ADTA SOP

b. ADS MACH JUMP (ADS_MJ)

   1. Signals the onset of Mach jump (1.6 < M < 1.1), the region where orbiter shock wave passes over the probes

   2. H_{PC} not incorporated by NAV due to potentially large errors in sensed P_S

   3. Flag used by RM to inhibit certain P_S comparison tests

Finally, when the landing gear is deployed, GNC air data calculations are compensated to account for perturbations introduced by the nose gear entering the airstream. The "nose gear down" indication is provided by the Hydraulics SOP.

4.2 ADTA/NAVDAD/DEFAD USAGE CONTROL

Transition of the output data for GNC from NAVDAD to probe-sensed air data is controlled by the ADTA SOP, based on the status of various ADS RM flags, crew inputs to SPEC 50 HORIZ SIT display, and current orbiter velocity. This ensures that the guidance and control software receives a continuous and valid stream of air data parameters (probe-sensed or NAV-derived) at all altitudes, regardless of probe status. During a nominal entry, the transition from NAVDAD to probe-sensed data occurs at Mach 2.5 if the crew has enabled its use. Off-nominal situations, however, can drastically vary the conditions for processing probe data and affect the outputs of the ADTA SOP (Table 4-1).

Table 4-1. Air data moding and outputs for GNC

Moding Condition				ADTA SOP Output	
Probe Status	Air Data Status	Mach Number	HORIZ SIT* (Aut/Inh/Force)	Output to G&C (α, $\bar{M}$, q, EAS, TAS)	Output to NAV** (H_{PC})
Either Deployed	Good	M > 2.5	Force	Probe Data	Probe Data
			Auto	NAVDAD	
		2.5 > M > 1.6	Force or Auto	Probe Data	
		1.6 > M > 1.1		Mach Jump Flag/Processing	Probe Data and Mach Jump Flag
		1.1 > M		Probe Data	Probe Data
	Fail	M > 1.5	Force or Auto	NAVDAD	Probe Data is frozen/static and Fail Flag (M > 1.6)
		1.5 > M > 1.1		Mach Jump Flag/Data is static/frozen	Probe Data and Mach Jump Flag (1.6 > M > 1.1)
		1.1 > M		DEFAD and DEFAD Flag	Probe Data frozen/static and Fail Flag (1.1 > M)
	Dilemma	M > 1.5	Any	NAVDAD	Probe Data is frozen/static and Fail Flag
		1.5 > M		DEFAD and DEFAD Flag	
Neither Deployed	Any	M > 1.5	Any	NAVDAD	None
		1.5 > M		DEFAD and DEFAD Flag	

*When inhibit (INH) is selected, NAVDAD will be output to G&C above Mach 1.5 and DEFAD will be output to G&C below Mach 1.5.

**NAV will inhibit H_{PC} above Mach 2.5 (unless FOR is selected), when it is in the Mach Jump region or a failure is indicated.

The SOP output parameters for Guidance and Control (G&C) are computed from probe-sensed data whenever the following conditions are met:

a. At least one air data probe is considered deployed

b. At least one good ADTA is associated with any deployed probes

c. SPEC 50 HORIZ SIT display ADTA TO G&C - AUT (FOR)

d. Mach ≤ 2.5 (if ADTA TO G&C - AUT)

SPEC 50 ADTA TO G&C is initialized in inhibit (INH) and, regardless of other conditions, signals the SOP to compute an output data set based on NAVDAD parameters until the crew selects AUTO or FORCE. Selection of FORCE causes the SOP to output probe-sensed data above Mach 2.5; however, most air data parameters cannot be used by the G&C software prior to TAEM interface (MM305).

During Mach jump, the G&C software continues to use air data. In this region, the SOP algorithms for M, $\overline{q}$, and EAS use a software-derived estimated free-stream static pressure (P_∞). This parameter is corrected in the same manner as that previously described for estimated free-stream Temperature (T_∞). Probe-sensed P_S is still used, however, for computing α and H_{PC}. This is acceptable because NAV is not updated with H_{PC} and α is not sensitive to errors in P_S. The Mach number calculation based on estimated P_∞ is used to signal the termination of the Mach jump region when M <1.1.

Because NAVDAD can be ineffective in the presence of lower atmospheric winds, the SOP uses DEFAD when probe data is unavailable below V_{REL} = 1500 ft/sec. When invoked, the software assumes α is “fixed” at 7.5° and uses a lookup table where $\overline{q}$ becomes a function of NAV-derived V_{REL}. EAS and Mach number are still drawn from NAVDAD, while TAS (V_{REL}) is provided by User Parameter Processing (UPP) software.

4.2.1 LEFT/RIGHT Air Data Calculations for the PFD

These calculations are initiated when the CDR or PLT selects the LEFT or RIGHT positions of the AIR DATA switch on panels F6 or F8. If the probes are deployed and ADTAs not commfaulted, the following data will be calculated for display on the flight instrument tapes from the left or right probe selected pressures furnished to the SOP by ADS RM: α, M, EAS, H_{PC}, and pressure altitude rate.

With the AIR DATA switch in the NAV position on panel F6 or F8, the PFD displays NAV altitude and altitude rate, regardless of velocity or GNC air data processing status. Keep in mind, though, that NAV software processing of H_{PC} is reflected in these specific parameters as the onboard state vector converges with the probe-sensed environment.

The PFD (with AIR DATA switch selected to NAV) displays the same air data parameters as those provided for G&C processing (α, M, and EAS) by the ADTA SOP. When weight on the nose gear is sensed, however, EAS is replaced by relative Velocity magnitude (V_p) to provide the crew with an indication of ground speed for manual braking purposes. When G&C is not processing probe-sensed air data, the PFD displays Inertial Measurement Unit (IMU)-derived α from the Attitude Processor.

4.2.2 ADTA SOP OVERRIDE Display Calculations

The SOP computes H_{PU}, Mach number, and angle of attack for each ADTA output pressure whenever the SPEC 51 OVERRIDE display is active and the ADTA is not commfaulted (Figure 4-2). The crew uses these parameters to assess sensor agreement with onboard software before incorporation in order to confirm ADS RM failure indications and to troubleshoot an air data dilemma condition.

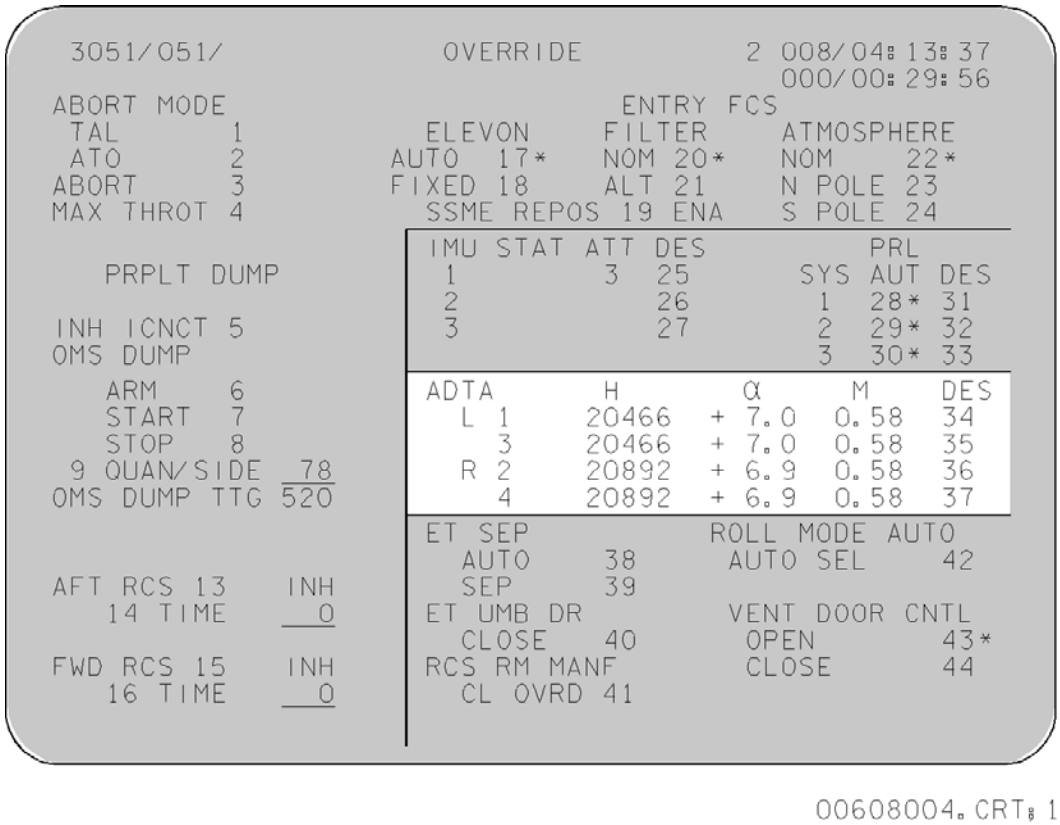

Figure 4-2. SPEC 51 OVERRIDE display

4.3 QUESTIONS

1. Identify the six output parameters processed by the ADTA SOP.

2. In which software major modes are air data parameters processed?

3. Which orbiter system(s) is the recipient of left/right air data? Which receive selected air data?

4. For which parameters does the ADTA SOP substitute NAVDAD data when probe-sensed data is not available?

5. Describe default air data and when it is used.

6. What probe-sensed data is available for crew display on SPEC 51? Compare this with the air data observed via the PFD.

This page intentionally blank

5.0 AIR DATA DISPLAYS

Air data information can be seen on several Data Processing System (DPS) displays, including the GNC SYS SUMM 1, HORIZ SIT (SPEC 50), OVERRIDE (SPEC 51), and RGA/ADTA/RCS (SPEC 41). The PFD shows air data information on selected flight instrument tapes. The Head-Up Displays (HUDs) provide limited information from air data.

5.1 GNC SYS SUMM 1

The status of the four ADTAs is shown in the lower right corner of the GNC SYS SUMM 1 (Figure 5-1). The ADTA section of this display is active only in GNC OPS 3 and 6. Under normal conditions, the status field for each ADTA is blank. Failure conditions can be indicated by the special symbols described below:

M – The ADTA is commfaulted

↓ – The ADTA has been declared failed or deselected

? – The ADTA is involved in a dilemma

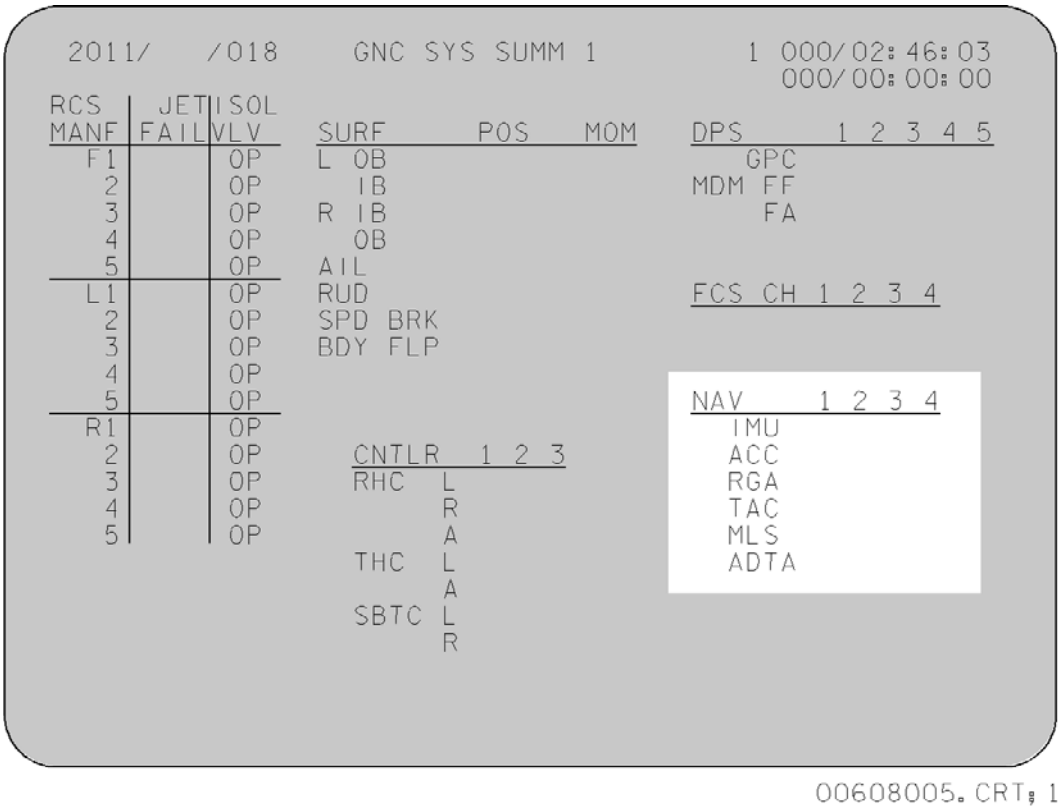

Figure 5-1. GNC SYS SUMM 1 display

5.2 OVERRIDE (SPEC 51)

The OVERRIDE page is available in GNC OPS 1, 3, and 6. Some of the values calculated by the ADS SOP can be seen near the middle of the OVERRIDE page (Figure 5-2). Note that the ADTAs are listed in probe order; i.e., left (ADTAs 1 and 3) followed by right (ADTAs 2 and 4). For each ADTA, the calculated values for altitude (H, feet), angle of attack (α, degrees), and Mach number (M) are shown. In addition, the capability to remove an ADTA from consideration by RM is available through the Deselect (DES) option (items 34-37). Status information similar to that on the GNC SYS SUMM 1 is shown in the column to the right of the ADTA numbers.

```
 3051/051/              OVERRIDE          2 008/04:13:37
                                            000/00:29:56
ABORT MODE                        ENTRY FCS
 TAL       1            ELEVON    FILTER    ATMOSPHERE
 ATO       2          AUTO  17*   NOM 20*   NOM     22*
ABORT      3          FIXED 18    ALT 21    N POLE 23
MAX THROT 4             SSME REPOS 19 ENA   S POLE 24
                      IMU STAT ATT DES          PRL
   PRPLT DUMP          1        3  25       SYS AUT DES
                       2           26        1  28* 31
INH ICNCT 5            3           27        2  29* 32
OMS DUMP                                     3  30* 33
   ARM     6          ADTA      H        α      M    DES
   START   7            L 1    20466  + 7.0  0.58  34
   STOP    8              3    20466  + 7.0  0.58  35
 9 QUAN/SIDE  78        R 2    20892  + 6.9  0.58  36
OMS DUMP TTG 520          4    20892  + 6.9  0.58  37
                      ET SEP            ROLL MODE AUTO
                        AUTO     38      AUTO SEL     42
AFT RCS 13    INH       SEP      39
   14 TIME     0      ET UMB DR          VENT DOOR CNTL
                        CLOSE    40       OPEN        43*
FWD RCS 15    INH     RCS RM MANF         CLOSE       44
   16 TIME     0        CL OVRD 41
```

00608006.CRT: 1

Figure 5-2. OVERRIDE (SPEC 51) display

5.3 HORIZ SIT (SPEC 50)

The HORIZ SIT page is available in GNC OPS 1, 3, and 6. Options in the lower left corner of the HORIZ SIT page (Figure 5-3) allow the crew to control whether information from the ADTAs is used by the NAV and G&C software. This control is provided through the Auto (AUT), Inhibit (INH), and Force (FOR) options in the same manner as it is for the other navigation aids.

NAV software can use air data altitude (ADTA H). The options and information shown on the HORIZ SIT are described as follows:

a. RESID (residual) – The difference, in feet, between the orbiter's altitude based on air data and the altitude based on the state vector

b. RATIO – The ratio of the current residual to the maximum allowable residual

c. AUT – Allows processing of the data by NAV if the RATIO is less than 1 and Mach number is less than 2.5

d. INH – Prevents the processing of the data by NAV

e. FOR – Overrides the ratio and Mach tests and forces processing of the data by NAV, if below Mach 3.5

G&C software uses numerous values derived from air data (ADTA TO G&C). The values include α, M, $\bar{q}$, EAS, and TAS. The options and information shown on the HORIZ SIT are described in the following list:

a. AUT – Allows processing of the data by G&C, provided Mach number is less than 2.5 and other tests are satisfied

b. INH – Prevents the processing of the data by G&C

c. FOR – Overrides the Mach test and forces processing of the data by G&C

Both ADTA H and ADTA TO G&C are set to INH by default and must be taken to AUT or FOR before the software can make use of the data.

In addition to these options, ITEM 9 at the top of the page allows the crew to input the altimeter (ALTM) setting for the landing site. This pressure, which is input in inches of mercury, is used in the calculation of ADTA H below 12000 feet.

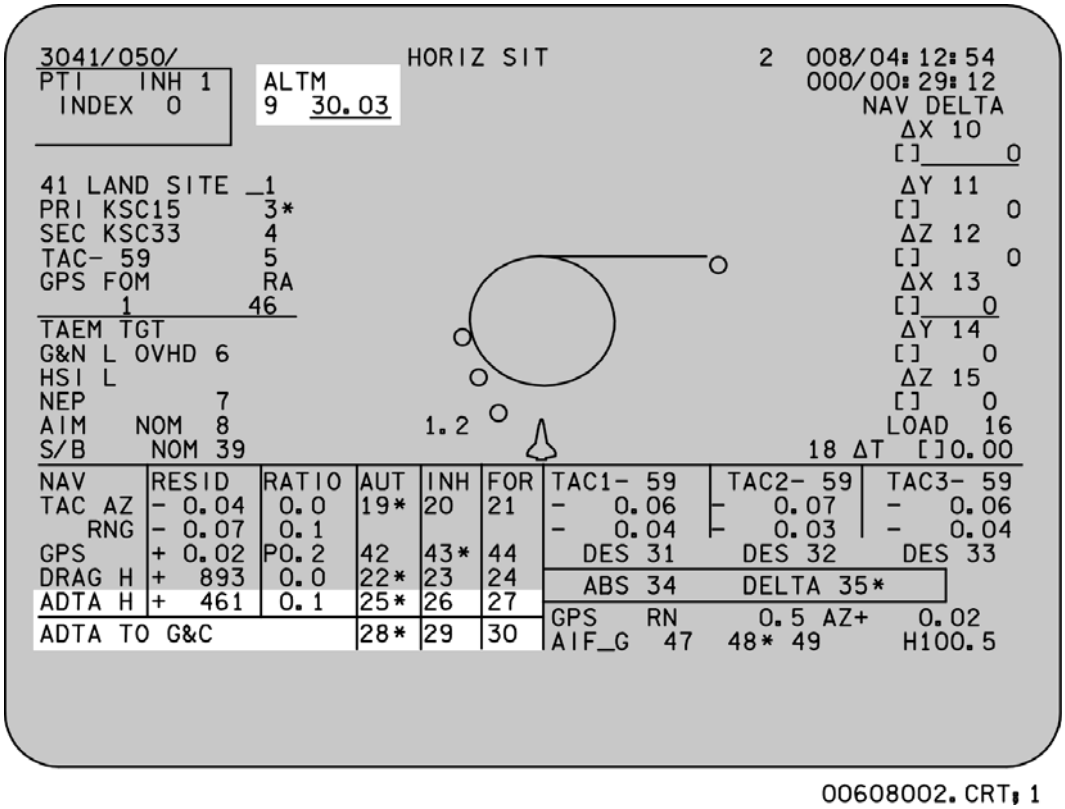

Figure 5-3. HORIZ SIT (SPEC 50) display

5.4 RGA /ADTA / RCS (SPEC 41)

The RGA /ADTA / RCS page is available only in GNC OPS 8. The middle section of the RGA/ADTA/RCS page (Figure 5-4) contains the controls and feedback for the ADTA and Rate Gyro Assembly (RGA) self-tests. The controls for the self-tests are on the line labeled TEST and are described below:

a. HI – Starts the high self-tests for the ADTAs and RGAs. An asterisk is displayed while the tests are running.

b. LO – Starts the low self-tests for the ADTAs and RGAs. An asterisk is displayed while the tests are running.

c. STOP – Terminates the self-tests.

Output from the ADTAs is listed in probe order. For each ADTA, the following information and options are provided:

a. DES – Allows the deselection of the ADTA as a candidate for the selection filter. Deselection of an ADTA carries over to GNC OPS 3 for entry.

b. STAT – The current status of the ADTA; it is blank or displays BITE.

c. P_S – The static pressure, in inches of mercury.

d. $P\alpha_C$, $P\alpha_U$, and $P\alpha_L$ – The center alpha, upper alpha, and lower alpha pressures, respectively, in inches of mercury.

e. T – The total temperature, in degrees Celsius (°C).

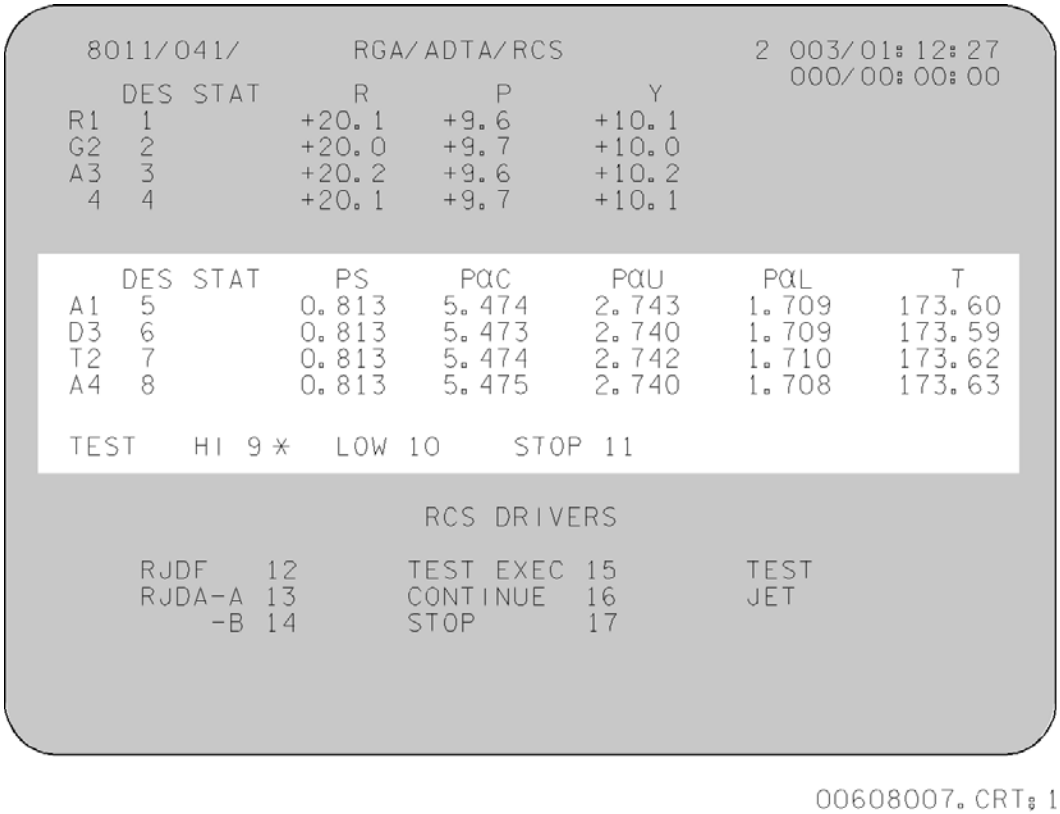

Figure 5-4. RGA/ADTA/RCS (SPEC 41) display

When a self-test is commanded, the ADTA responds with predetermined values for pressures and temperature. After approximately 10 seconds, the GNC software compares these values with a set of limits. If the data is too high, too low, or missing, a status indicator of ↓, ↑, or **M**, respectively, is shown in the space to the right of the data. If the software receives a BITE out-of-tolerance indication during the test, **BITE** is displayed in the status column until the test is terminated.

5.5 RCS / RGA / ADTA TEST (SPEC 102)

The RCS/RGA/ADTA TEST (SPEC 102), is available in GNC OPS 9. The RCS/RGA/ADTA TEST page (Figure 5-5) is used for preflight tests and, while it is similar to the RGA/ADTA/RCS page, it has a few differences. Individual ADTAs can be selected for the self-test (enable (ENA)) but cannot be deselected as candidates for RM. Self-tests for all ADTAs and RGAs can be initiated using the Auto Sequence (AUT SEQ) command or can be inhibited using the INH ALL command. The terminate (TERM) command stops the current self-tests and inhibits self-tests for all the ADTAs and RGAs.

```
9011/102/      RCS/RGA/ADTA TEST     2 000/00:25:50
                                       000/00:25:50

RCS DRIVERS

  RJDF    1      START TEST 4    STAT
  RJDA-A  2      CONT       5    JET
      -B  3      TERM       6    STEP


SENSORS                                  TEST CONTROL:
                                          HIGH START  15
   ENA STAT      R        P        Y      LOW START   16
R1  7          -0.1     -0.1      0.0     AUTO SEQ    17
G2  8          -0.1     -0.0      0.0     TERM        18
A3  9          -0.1     -0.1      0.0
 4 10          -0.1     -0.1     -0.0     INH ALL     19

   ENA STAT    PαC      PS       PαU      PαL      TT
A1 11        29.958   29.958   28.941   34.812   14.94
D3 12        29.958   29.958   28.941   34.812   14.94
T2 13        29.958   29.958   28.941   34.812   14.94
A4 14        29.958   29.958   28.941   34.812   14.94
```

00608008.CRT: 1

Figure 5-5. RCS/RGA/ADTA TEST (SPEC 102) display

5.6 PRIMARY FLIGHT DISPLAY

The PFD (Figure 5-6) is used to display navigation and air data sensed information for the pilot and commander. The PFD includes flight instruments tapes during MM304-305 and MM602-603 that can display Air Data derived information:

a. ALPHA (α) – Orbiter angle of attack in degrees.

b. M/V – Mach number (from 0.9 to 4) or velocity (from 4 to 27 k ft/s).

c. KEAS – Equivalent airspeed (from 0 to 500 knots). Displayed as a readout box below the M/V tape above Mach 0.9. Below Mach 0.9, the M/V tape changes to display KEAS and digital readout displays M/V.

d. H – Altitude (Kft below +400 and nautical miles above +65).

e. H dot – Altitude rate in feet/second.

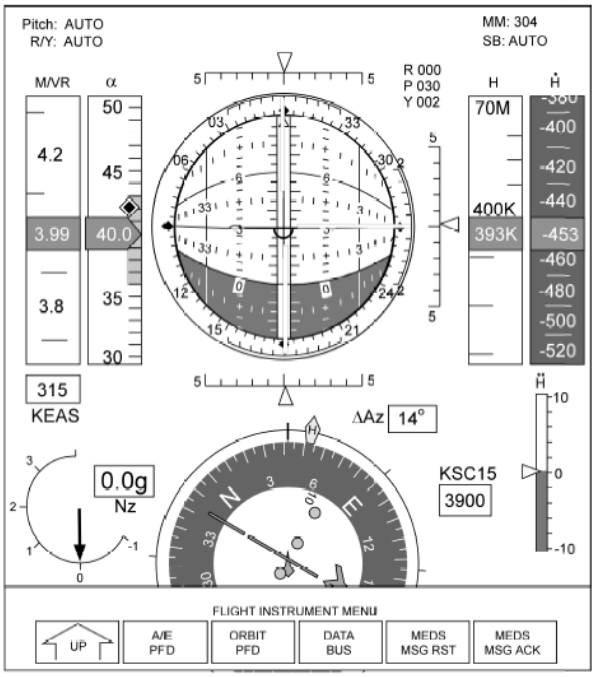

Figure 5-6. Primary Flight Display above Mach 0.9

Each of the tapes has an associated OFF indication that results in a blank box and outlined in red whenever valid data is unavailable.

The Alt Accel (H double dot) displayed on the flight instruments is always determined by NAV. The remaining parameters, ALPHA, M/V, KEAS, Alt Rate, and Alt, are determined based on information from the ADS or NAV, depending on the position of the AIR DATA switch and the phase of flight. When the radar altimeters lock on at 5000 feet, a triangle will appear on the altitude tape indicating where the radar altimeters are measuring altitude, and the value read in the digital field will display an “R” corresponding to that altitude.

During entry, in MM304 and 305 (or 602 and 603), the position of the AIR DATA switch is monitored and interpreted as follows:

a. NAV –The Alt and Alt Rate are derived from NAV. ALPHA, M/V, and KEAS display NAVDAD unless probe-sensed air data is being output for use by G&C, in which case, display this probe-sensed air data.

b. LEFT/RIGHT –Display the air data parameters output by the ADTA SOP for the selected probe. If the probe is not deployed or if both ADTAs for the probe are commfaulted, OFF indications are displayed on the tapes.

Recall that in the Mach jump region (Mach 1.6 to 1.1), the ADTA SOP substitutes parameters (based on Mach jump constants) for the data sent to G&C to avoid transients as the orbiter shock wave passes over the ADS probes; these substituted values are not reflected on the PFD. During the Mach jump region, the PFD displays values derived from the ADS (with a smoothing function applied), assuming ADTA TO G&C is not inhibited on the HORIZ SIT page.

5.7 HEAD-UP DISPLAYS

The HUDs, located above panels F6 and F8, display some of the same information (altitude and airspeed) found on the tapes. The source for this data is the same as for the flight instruments.

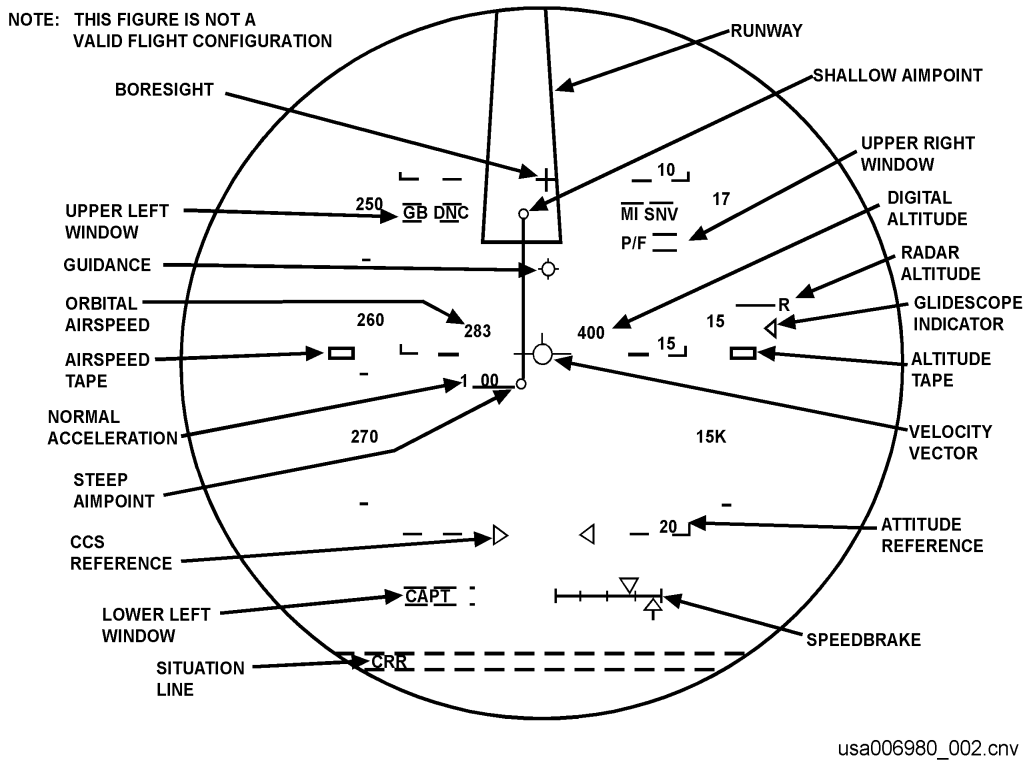

Figure 5-7. HUD display

5.8 QUESTIONS

1. Once the probes are deployed, how can the crew direct the onboard software to use air data for guidance, navigation, and control calculations?

2. How can the crew monitor equivalent airspeed derived from an air data probe?

3. On which display(s) can the crew view orbiter altitude derived from air data?

4. What indication does the crew have to determine whether a probe is deployed?

6.0 CREW PROCEDURES

Procedures for use of the ADS are contained within the Entry Maneuvers cue card, Orbit Ops Checklist, and Entry Checklist. These procedures are discussed in the following pages. Failure procedures contained within the Pocket Checklists and Ascent Entry Systems Procedures are not discussed.

6.1 PROBE DEPLOY AND AIR DATA MANAGEMENT

The Entry Maneuvers cue card (Figure 6-1) indicates the probes should be deployed when velocity reaches 5000 ft/s (VR = 5K). The crew can verify probe deployment by taking the AIR DATA switch on panels F6 and F8 to the LEFT and RIGHT position, and noting the absence of OFF indications on the PFD. In the event a probe does not successfully deploy, the crew can try alternate methods of deployment. If the probe becomes stuck while deploying, reversing the motion of the probe may free it. This is accomplished by attempting to stow the probe, then redeploying it. Another possible scenario is if the DEPLOY position is failed for an AIR DATA PROBE switch. Attempting to deploy the probe can be accomplished by taking the switch to the DEPLOY/HEAT position, thus allowing a different set of contacts to be utilized. Since the crew does not have any insight as to which problem may be for the probe not deploying, the generic action is to combine both methods of stowing the probe, then attempting to redeploy the probe using the DEPLOY/HEAT position. MCC has more insight, and may call for one method directly.

Below Mach 3.5, the probe calibration limit, the air data can be evaluated by considering the RATIO and RESIDUAL for ADTA H on the HORIZ SIT page (SPEC 50); comparing the values displayed on the flight instruments when the AIR DATA switch is moved between NAV, LEFT, and RIGHT; and by viewing the air data displayed on the OVERRIDE page (SPEC 51). Normally, flight controllers on the ground assist with evaluation of air data and make the call to “take air data” to NAV and G&C. In the event communication with the ground is lost, the ADTA management table (Figure 6-2) in the Entry Checklist can be used to determine if air data should be accepted.

ADTA H should be taken to AUTO in both PASS and BFS if the RATIO on SPEC 50 is less than 1. A ratio greater than 1 occurs if the difference between NAV and the ADS-derived values is too high, indicating either NAV or ADS is incorrect. If the ratio is greater than 1 and if Tactical Air Navigation (TACAN) data is available and agrees with NAV (ratio less
than 1), take ADTA H to INH to prevent it from corrupting NAV. If no good TACAN information is available, take ADTA H to FORCE, if it is steady, to override the NAV editing function; otherwise, take it to AUTO.

ADTA TO G&C should be taken to AUTO (PASS only), provided there are at least two good ADTAs producing data and the data appear reasonable; otherwise, leave it in INH. Flight Rules prohibit the incorporation of a single ADTA TO G&C, thus requiring the crew to fly theta limits, rather than use a system with zero-fault tolerance. Exceptions to the rule include high winds on the Heading Alignment Cone (HAC), high crew workload,

bad NAV, and BFS engage. BFS is initialized with ADTA TO G&C in AUTO, therefore no item entry is needed.

If ADTA TO G&C is not incorporated by Mach 2.5, Control Stick Steering for pitch (P CSS) should be used to avoid control transients that could result upon the transition from NAVDAD to true air data. Once ADTA TO G&C has been taken, control can be given back to the vehicle.

At Mach 2.0, a note is made to check theta limits if air data has not been taken to G&C. This indicates that the pitch angle (theta) of the orbiter should be monitored on the VERT SIT display or the PFD to ensure it stays within the NOSE HI and NOSE LO bracket limits (using P CSS, if necessary).

FLIGHT CONDITIONS	MANEUVER
V = 7K	✓TACAN status
V = 5K	ADTA PROBES – DEPLOY (✓HEAT) Begin AIL and RUD trim monitoring
M = 2.7	✓APUs HUD PWR (two) – ON
* If M < 2.5; P CSS for ADTA to G&C incorp *	
M = 2.0	Ensure ADTA to G&C else ✓Theta limits
M < 1.0	✓R FLT CNTLR – ON P, R/Y – CSS as reqd ✓SPDBK CMD vs POS ✓NWS – 1 Lock Inertia Reels MAX N_Z [ ] . [ ]
M = 0.7	✓LG EXTEND ISOL VLV – OP
h = 15K	✓MLS
h = 10K	✓A/L, TABS/VISORS – CL/LES O2 – ON (KSC)
h = 2K	LANDING GEAR ARM pb – ARM
h = 300	LANDING GEAR DN pb – DN
MAIN GEAR TD	✓SPDBK – 100%
V = 195 KEAS	DRAG CHUTE pb (two) – ARM, DPY (simo)
V = 185 KEAS	DEROTATE
NOSE GEAR TD	SRB SEP – MAN/AUTO and depress pb ✓Auto Load Relief ✓HYD BRAKE ISOL VLV (three) – OP
MIDFIELD and V < 140 KGS	BRAKE as required (8–10 fps^2, –0.25 to –0.3G)
* If 5K' remaining and V > 140 KGS – MAX BRAKING *	
V = 60 KGS	DRAG CHUTE JETT pb – JETT
V = 40 KGS	BRAKE < 6 fps^2 (–0.2G) (Antiskid cutout)
WHEEL STOP	Go to ENT C/L, POST LANDING PROCEDURES

usa006080_028.tif

Figure 6-1. Entry maneuvers cue card

ADTA MGMT

	NAV				G&C
	RATIO < 1	RATIO > 1			Two or more good ADTAs
		IF BAD ADTA	IF BAD NAV STATE		
COMM OK	MCC: AUTO or INH*	MCC: INH	MCC: FORCE		Evaluate h,α,M MCC: AUTO (G&C)
NO COMM	AUTO	TACAN OK	NO TACAN		Evaluate h,α,M If reasonable: AUTO (G&C)
			ADTA ERRATIC	ADTA STEADY	
		INH	AUTO	FORCE	

* If ADTA H will degrade NAV state.

Figure 6-2. ADTA management table

6.2 FCS CHECKOUT

On orbit, GNC OPS 8 is used to perform the Flight Control Systems (FCS) Checkout (C/O) approximately 1 day prior to entry. Included in this checkout is a test of the ADTAs. The appropriate parts of the FCS C/O procedure from the Orbit Ops Checklist are shown in Figure 6-3. The procedure has the crew command high and low self-tests of the ADTAs, and the software compares the results to a table of limits. If an ADTA fails the test (other than for temperature), it should be deselected from RM. Deselection carries over to OPS 3 for entry. If a BITE is annunciated against an ADTA, it should be deselected, except in a few cases where the failure is not expected to affect performance of the unit.

2. Sensor Test – RGA,ADTA

NOTE

During RGA,ADTA test, deselect LRU for failure indicated:

RGA – bias null limits exceeded, '↑' or '↓', or SMRD

ADTA – any '↑' or '↓', except temp ('T')

2: GNC 41 RGA/ADTA/RCS

CRT2 √DES: (no *)

√STAT: blank

√PS,PαC,PαU,PαL,T – no M

High Test

TEST HI – ITEM 9 EXEC (*)

(after 10 sec, no *)

√No '↑' or '↓'

If ADTA BITE, √MCC (if LOS, proceed with test)

TEST STOP – ITEM 11 EXEC (*)

Low Test

TEST LOW – ITEM 10 EXEC (*) (after 10 sec, no *)

√No '↑' or '↓'

If ADTA BITE, √MCC (if LOS, proceed with test)

LIMIT VALUES TABLE

HIGH TEST LIMITS				
RGA				
R +18.8 to +21.2	P +9.4 to +10.6	Y +9.4 to +10.6		
ADTA				
PS .813 to .815	PαC 5.473 to 5.477	PαU 2.740 to 2.744	PαL 1.708 to 1.712	T 173.56 to 173.60
LOW TEST LIMITS				
RGA				
R -18.8 to -21.2	P -9.4 to -10.6	Y -9.4 to -10.6		
ADTA				
PS 24.887 to 24.889	PαC 29.527 to 29.531	PαU 21.708 to 21.712	PαL 14.713 to 14.717	T 18.50 to 18.54

usa006080_027.cnv

Figure 6-3. ADTA excerpts from FCS Checkout procedure

6.3 FAULT MESSAGES

There are five fault messages that may be annunciated indicating problems in the ADS.

a. RM FAIL ADTA – RM has detected a failure in an ADTA and it has been deselected. Additional indications for this failure include

   1. SM alert light and tone

   2. ↓ in the status columns for the ADTA

   3. ADTA deselected on the OVERRIDE page

b. RM DLMA ADTA – RM is in dilemma for air data. Air data is unavailable for use by GNC, requiring the crew to fly theta limits below Mach 2.0. Additional indications for this failure include

   1. Master alarm light and tone

   2. BACKUP C/W and AIR DATA lights on panel F7

   3. **?** in the status columns for the ADTAs

   4. Blank RATIO and RESID for ADTA H on the HORIZ SIT page

c. BCE STRG X ADTA – The ADTA is commfaulted. Additional indications for this failure include

   1. SM alert light and tone

   2. **M** in the status columns for the ADTA

d. NAV EDIT ALT – Probe-sensed air data is not being used by NAV below Mach 2.5. Additional indications for this failure include

   SM alert light and tone

e. PROBES – The left or right probe is not fully deployed between Mach 2.5 and Mach 1.0. Additional indications for this failure include

   SM alert light and tone

6.4 QUESTIONS

1. When are the probes deployed by the crew?

2. Once in AUTO, when will software begin to process air data?

3. What is the minimum prescribed velocity for incorporating air data before manual vehicle control (P CSS) is recommended?

4. Under what conditions would FORCE be used for ADTA H to NAV if the displayed ratio was greater than 1.0?

This page intentionally blank

7.0 BACKUP FLIGHT SYSTEM

The BFS uses air data in a manner similar to PASS; however, there are some major limitations in the BFS. The air data software is active in the BFS in OPS 304, 305, 602, and 603 and performs the same basic processing for air data as the ADTA SOP does for the PASS. This section concentrates on those aspects of BFS air data processing that differ from PASS.

7.1 PRE-ENGAGED VERSUS POST-ENGAGED

Pre-engaged, the BFS software receives information from the ADTAs by tracking PASS on the flight-critical data buses. In addition, the BFS receives altimeter settings by listening to the display/keyboard data buses for inputs to the ALTM item on the PASS HORIZ SIT page. No other information regarding the ADS is transferred from PASS to the BFS.

Post-engaged, of course, the BFS sends commands and receives data via the flight-critical data buses from all ADTAs and provides air data information for display on the flight instruments over these same buses.

7.2 HARDWARE INTERFACE PROGRAM

The BFS ADTA Hardware Interface Program (HIP) algorithms are identical to those contained in the PASS ADTA SOP relative to the utilization of probe-sensed pressures and Mach jump processing. The HIP calculates NAVDAD similarly to PASS; however, the HIP does not contain the logic to generate DEFAD. A functional block diagram of the HIP and its related interfaces is shown in Figure 7-1.

A probe is considered deployed if at least one of the deploy discretes from a given side is set. The status of the left and right probe deployment is used by the HIP to perform its ADTA selection process.

The HIP does not perform FDIR on the ADTAs; however, commfault status and certain bits of the ADTA MODE/STATUS word are utilized for ADTA moding. The BFS will annunciate RM FAIL ADTA in the event an ADTA on a deployed probe is unavailable or is downmoded due to BITE-detected problems. The MODE/STATUS word bits considered are those associated with pressure and hardware reasonableness tests performed by the ADTA processor. Temperature-related bits are not considered because probe temperature is not required by the HIP.

The HIP performs a selection process, which selects the lower-numbered-available ADTA on each deployed probe. These outputs are then averaged and utilized by the HIP to perform air data calculations. In the event neither probe is deployed or no good ADTA exists for a deployed probe, an ADS GOOD failure occurs and the BFS will invoke NAVDAD for output to GNC and certain flight instruments.

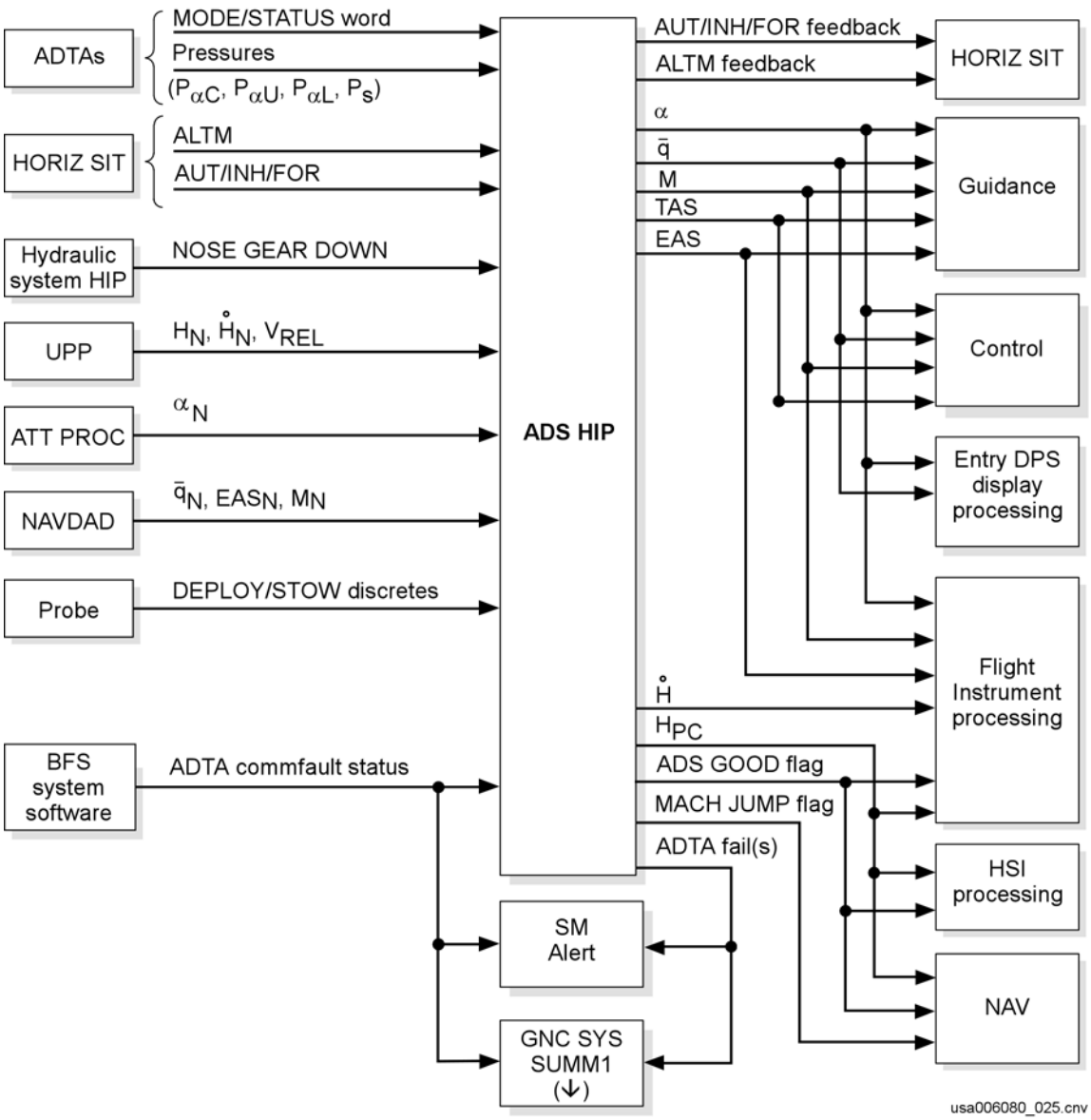

Figure 7-1. BFS ADTA HIP functional block diagram

7.3 OUTPUTS FOR GNC

Once a probe is considered deployed, the ADTA HIP calculates a corrected pressure altitude (H_{PC}) for NAV. In addition to H_{PC}, the HIP indicates whether the air data status is good and whether the vehicle is in the Mach jump region. The NAV software will not use H_{PC} to update the orbiter state vector if the ADS GOOD flag is false or the MACH JUMP flag is true. Otherwise, the processing of H_{PC} by NAV is governed by the AUT/INH/FOR function for ADTA H on the BFS HORIZ SIT (SPEC 50), just as in PASS.

For G&C, the values output by the HIP can vary, depending on probe deploy status, air data status, Mach number, and the AUT/INH/FOR function for ADTA TO G&C on the HORIZ SIT. The source of output data can be air data, NAVDAD, or special Mach jump processing (see Table 7-1).

Table 7-1. BFS air data moding and outputs for GNC

Moding Condition				ADTA HIP Output	
Probe Status	Air Data Status	Mach Number	HORIZ SIT* (Aut/Inh/Force)	Output to G&C (α, $\bar{M}$, q, EAS, TAS)	Output to NAV (H_{PC})
Either Deployed	Good	M > 2.5	Force	Probe Data	Probe Data
			Auto	NAVDAD	
		2.5 > M > 1.6	Force or Auto	Probe Data	Probe Data
		1.6 > M > 1.1		Mach Jump Flag/Processing	Probe Data and Mach Jump Flag
		1.1 > M		Probe Data	Probe Data
	Fail	Any	Force or Auto	NAVDAD	NAVDAD
Neither Deployed	Any	Any	Any	NAVDAD	None

*When inhibit (INH) is selected, NAVDAD will be output to G&C.

7.4 DISPLAYS

Air data information in the BFS can be seen on the GNC SYS SUMM 1 and the HORIZ SIT displays. The air data section of the HORIZ SIT display is identical to that of PASS. Unlike PASS, there is no air data information on the OVERRIDE (SPEC 51) display in

the BFS. The flight instruments are supported under the BFS; however, the HUDs are not supported.

The GNC SYS SUMM 1 (Figure 7-2) includes status information for the four ADTAs in the lower right side of the display. The ADTA section of the display is active only in OPS 3, 602, and 603. The only symbol that can be displayed for an ADTA is ↓, which can indicate either a commfault or failure.

The flight instruments operate under the BFS in the same way as under PASS when the AIR DATA switch is in the NAV position. When the commander's AIR DATA switch is placed in LEFT or RIGHT and air data is available, the BFS shows the output of the selection filter (i.e., there is no difference between the left and right positions under the BFS). Furthermore, when the commander's LEFT or RIGHT is selected and no air data is available, the BFS will not drive OFF indications on the tapes and will continue to display NAVDAD. Additionally, the BFS does not use inputs from the pilot's AIR DATA switch, leaving the pilot's PFD slaved to the commander's switches.

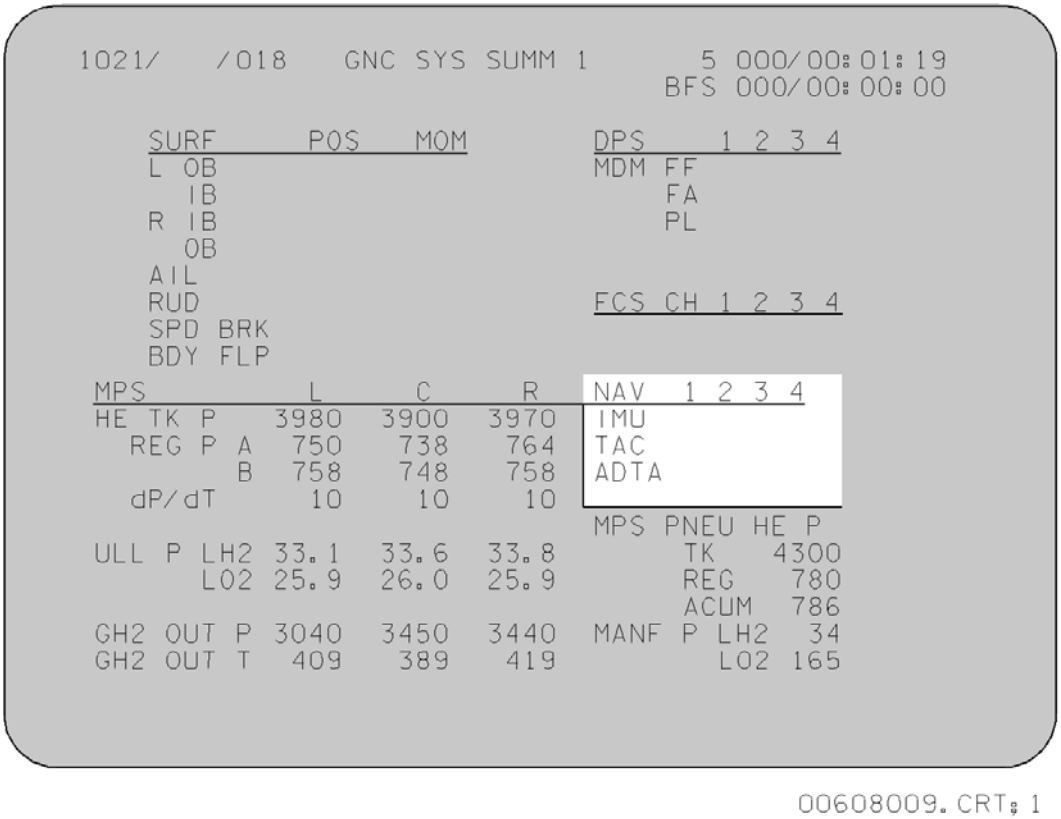

Figure 7-2. BFS GNC SYS SUMM 1 display

7.5 CREW PROCEDURES

Because the OFF indications on the flight instruments cannot be used to verify air data probe deployment after the BFS has been engaged, special care must be taken to confirm that both probes are successfully deployed. The probes should be deployed

individually, with the second probe being deployed after the data from the first has been analyzed.

If the BFS is engaged before air data has been analyzed, the POST BFS ENGAGE procedure (see Figure 7-3) in the Entry pages of the Ascent/Entry Systems Procedures (AESP) indicates that air data inputs to G&C should be inhibited on the HORIZ SIT display, SPEC 50. The next line in the procedure indicates the crew should enable air data input to G&C by Mach 1.5. This is necessary due to the lack of DEFAD in the BFS and the unreliability of NAVDAD below Mach 1.5 when winds are present. Flight Rules do not prohibit the incorporation of a single good ADTA TO G&C after engaging the BFS. Because there is no option to deselect failed ADTAs in the BFS, the crew should open the ADTA circuit breaker or stow the appropriate probe.

POST BFS ENGAGE

If PASS GPCs running:
- 1. Aff GPC MODE – STBY/HALT
- 2. BFS I/O RESET

3. ✓FCS CHs, IMU config

⇒ If Air Data not analyzed:
- 4. [G50] INH AD to G&C
- 5. M=5: Deploy,evaluate probes one at a time
- 6. ✓AD to G&C by M = 1.5

If failed ADTA(s) in PASS:
- 7. ADTA cb(s) – op or stow probe

8. [G51] DES failed (commfaulted) RGA, AA, SURF
9. [G50] DES failed TAC

At M ≤ 2.7:
- 10. CDR TRIM PANEL – OFF
  RHC/PNL – ENA

At H = 3K:
- 11. SPDBK – MAN (✓DEL PAD setting)

At MAIN GEAR TD:
- 12. SPDBK – 100%

Figure 7-3. POST BFS ENGAGE procedure

7.6 FAULT MESSAGES

There are three fault messages that may be annunciated by the BFS indicating problems in the ADS:

a. RM FAIL ADTA – An ADTA on a deployed probe has been removed from the selection filter. The downmode may result from a commfault or an ADTA hardware-detected failure. Additional indications for this failure include

   1. SM Alert light and tone

   2. ↓ in the status column for the ADTA

b. BCE STRG X ADTA – The ADTA is commfaulted. Additional indications for this failure include

   1. SM Alert light and tone

   2. ↓ in the status columns for the ADTA

   3. RM FAIL ADTA message if the associated probe is deployed

c. NAV EDIT – Probe-sensed air data is not being used by NAV below Mach 2.5. This message may also occur if NAV is not processing DRAG H or TACAN at specified points during entry. Additional indications for this failure include

   SM Alert light and tone

7.7 QUESTIONS

1. What are the ADTA redundancy guidelines (per Flight Rules) for G&C air data processing (ADTA TO G&C) on the BFS? How does PASS differ from BFS?

2. How would an ADTA commfault be annunciated on BFS GNC SYS SUMM 1?

3. What capability does the crew have to monitor exclusive left probe data or right probe data once the BFS has been engaged?

4. Suppose that the BFS has been engaged and ADTA 4 is significantly in error. What failure indications would be expected?

5. Suppose that BITE on ADTA 4 detects unreasonable pressures. What failure indications would be expected?

This page intentionally blank

APPENDIX A
ACRONYMS AND ABBREVIATIONS

A/D	Analog/Digital
ACCEL	Acceleration
ADI	Attitude Direction Indicator
ADS	Air Data System
ADTA	Air Data Transducer Assembly
ADTA H	ADTA Altitude to Navigation
AESP	Ascent/Entry Systems Procedures
ALT	Altitude
ALTM	Altimeter
ALT RATE	Altitude Rate
ATT PROC	Attitude Processor
AUT	Auto
AUT SEQ	Auto Sequence
AVG	Average
BCE	Bus Control Element
BFS	Backup Flight System
BITE	Built-in Test Equipment
C/O	Checkout
C/W	Caution and Warning
CDR	Commander
CSS	Control Stick Steering
DAP	Digital Autopilot
DEFAD	Default Air Data
DES	Deselect
DPS	Data Processing System
EAS	Equivalent Airspeed
ECLSS	Environmental Control and Life Support System
ENA	Enable
FCS	Flight Control System
FDIR	Fault Detection, Identification, and Reconfiguration
FF	Flight-Critical Forward
FMCA	Forward Motor Control Assembly
FOR	Force
FPCA	Forward Power Control Assembly
G&C	Guidance and Control
GNC	Guidance, Navigation, and Control
GPC	General Purpose Computer

H	Altitude
H	Altitude rate
HAC	Heading Alignment Cone
Hg	Mercury
HIP	Hardware Interface Program
H_{PC}	Corrected Pressure Altitude
H_{PU}	Uncorrected pressure altitude
HSI	Horizontal Situation Indicator
HUD	Head-Up Display
IMU	Inertial Measurement Unit
INH	Inhibit
KEAS	Knots Equivalent Airspeed
LRU	Line Replaceable Unit
LS	Limit Switch
M	Mach number
M/VEL	AMI Mach/velocity nomenclature
MCC	Mission Control Center
MDM	Mulitplexer/Demultiplexer
MJ	Mach Jump
MM	Major Mode
MN	Main (Bus)
MSEC	Millisecond
NAV	Navigation
NAVDAD	Navigation-Derived Air Data
OPS	Operational Sequence
P_∞	Estimated free-stream static pressure
$P\alpha C$	center alpha pressure
$P\alpha L$	lower alpha pressure
$P\alpha U$	upper alpha pressure
P_D	static pressure correction to US 1962 atmosphere
P_i	pressure measurement from ADTA
P_j	pressure measurement from ADTA
P_S	static pressure
PASS	Primary Avionics System Software
P CSS	Control Stick Steering for pitch
PFD	Primary Flight Display
PLT	Pilot
$\bar{q}$	Dynamic Pressure

RCS	Reaction Control System
RDR	Radar
RESID	Residual
RGA	Rate Gryo Assembly
RM	Redundancy Management
SM	Systems Management
SOP	Subsystem Operating Program
SPEC	Specialist Function
STAT	Status
STRG	String
SYS SUMM	System Summary Display
T	Total Temperature
T_∞	estimated free-stream temperature
T_D	Static Temperature Correction to US 1962 Atmosphere
T_S	Static Temperature
TACAN	Tactical Air Navigation
TAEM	Terminal Area Energy Management
TAS	True Airspeed
TPS	Thermal Protection System
UPP	User Parameter Processing
V	Volts
V_P	relative Velocity magnitude
V_{REL}	Earth relative velocity
X_0	X location in orbiter structural coordinates
Y_0	Y location in orbiter structural coordinates
Z_0	Z location in orbiter structural coordinates
α	Angle of Attack, Alpha
β	Side Slip Angle
ρ_0	Sea Level Air Density
°C	Degrees Celsius

This page intentionally blank

APPENDIX B
ANSWERS

Answers to Section 2

1. Each air data probe samples static pressure (P_s), upper alpha pressure ($P_{\alpha U}$), center alpha pressure ($P_{\alpha C}$), and lower alpha pressure ($P_{\alpha L}$).

2. Two switch throws are required to stow each probe. First, the AIR DATA PROBE STOW switch for the probe is taken to ENABLE. Next, the AIR DATA PROBE switch is taken to STOW.

3. Right probe data is received by ADTAs 2 and 4. Left probe data is received by ADTAs 1 and 3.

4. Probe-sensed pressures should not be processed above Mach 3.5, based on the probe hardware performance specifications.

5. PASS software does not act in any way upon detection of an air data BITE in OPS 3. In OPS 8, a BITE indication will be present on SPEC 41.

6. Each ADTA is powered by one of the three main buses (answer c).

7. The air data probe motors run on three-phase AC power (answer b).

Answers to Section 3

1. FDIR compares sensed pressures and can downmode those which exceed a predetermined threshold.

2. Left probe data will be the average of data from ADTAs 1 and 3. Right probe data will be the data from ADTA 4. Selected air data will be the average of left probe data and right probe data.

3. A deployed probe will be considered unusable only if neither pair of probe discretes matches the required state; i.e., DEPLOY = true and STOW = false. This can occur due to a failure of the probe limit switches or of the FF MDMs, which transmit the discrete status to the software.

4. RM will declare an air data dilemma if a side-to-side data comparison test fails, if a same-side test fails on the only available probe, or if all available ADTAs are manually deselected.

Answers to Section 4

1. The ADTA SOP outputs dynamic pressure ($\bar{q}$), angle of attack (α), Mach number (M), True Airspeed (TAS), Equivalent Airspeed (EAS), and corrected pressure altitude (H_{PC}).

2. Air data parameters are processed by the ADTA SOP in GNC Major Modes 304, 305, 602, and 603. NAVDAD parameters are typically processed in MMs 304 and 602, while probe-sensed data is processed in MMs 305 and 603. In the absence of probe sensed air data, DEFAD will be used in MM305 and MM603.

3. Left/right air data is used by the flight instruments for driving tapes on the PFD. Selected air data is used by GNC software modules.

4. When not using probe-sensed data, the ADA SOP gets $\bar{q}$, M, EAS, TAS, and α from NAVDAD (includes parameters provided by UPP and ATT PROC).

5. Default air data is processed by PASS when probe-sensed data is not available below a velocity of 1500 fps. In this case, $\bar{q}$ is processed as a function of relative velocity and α is assumed fixed at 7.5°. Default data is used in lieu of NAVDAD because high wind conditions can severely impact its accuracy during flight in the lower atmosphere.

6. GNC SPEC 51 displays probe-sensed altitude, alpha, and Mach number for each ADTA. The flight instruments can only provide probe-averaged data for each side or the average of both probes (selected air data) when the AIR DATA switch is in the NAV position.

Answers to Section 5

1. The onboard software can use air data once the AUT/INH/FOR options for NAV and/or G&C are taken to AUT or FOR on the HORIZ SIT page (SPEC 50).

2. EAS derived from an air data probe can be monitored on the PFD by taking the AIR DATA select switch to LEFT or RIGHT.

3. Altitude from each ADTA is displayed on the OVERRIDE page (SPEC 51), while altitude from a probe can be displayed on the PFD by taking the AIR DATA select switch to LEFT or RIGHT.

4. Red boxes will be displayed for the flight instrument tapes when the AIR DATA select switch is set to a probe that is not deployed.

Answers to Section 6

1. Both air data probes are simultaneously deployed by the crew at Mach 5.0.

2. If air data (both ADTA H and ADTA TO G&C) is taken to Auto prior to Mach 2.5, then processing will begin at Mach 2.5.

3. If air data has not been incorporated to G&C by Mach 2.5, the crew should take manual control in pitch (P CSS) until incorporation occurs. If air data processing has not occurred to G&C by Mach 2.0, the crew should fly theta limits. Below this velocity, guidance software is not trusted to correctly command the flight control surfaces for flight through the lower atmosphere without input from the air data system.

4. If the ADTA H edit ratio is above 1.0, data should only be forced if (1) degraded onboard NAV is determined to be the cause of the discrepancy with air data and (2) NAV processing of ADTA H will improve the state vector.

Answers to Section 7

1. Incorporation of air data to G&C can occur with only a single remaining ADTA when flying on the BFS. In PASS, at least two ADTAs are required per guidelines in order to process air data to G&C. Incorporation of ADTA H for navigation is independent of the above guidelines.

2. A commfaulted ADTA will be indicated with a "↓ " symbol on the BFS GNC SYS SUMM. This signature is identical to that for an ADTA downmoded from the BFS air data selection filter due to BITE detection.

3. Once the BFS has been engaged, the crew has no way to monitor data from a single probe if both probes are deployed because the flight instruments drive probe-averaged data for the LEFT and RIGHT positions of the AIR DATA switch. Recall that GNC SPEC 51 does not display air data parameters in the BFS.

4. Bad data from ADTA 4 would not result in any failure indications in the BFS because the BFS uses the lower numbered ADTA on each probe.

5. The BFS would annunciate an RM FAIL ADTA fault message along with the SM Alert light and tone. A "↓" would also be displayed for the ADTA status on GNC SYS SUMM 1.

This page intentionally blank

APPENDIX C
ADTA MODE/STATUS WORD

The ADTA MODE/STATUS word supplies the health and status of the ADS hardware components to the flight software. During entry, the BFS will downmode an ADTA for certain bits set to the failed state. In OPS 8, the ADTA GOOD bit is used to drive a crew status indicator on the SPEC 41 RGA/ADTA/RCS display.

Bits 5 through 13 can be set and reset every processing cycle (40 msec), but three consecutive fail cycles are required before the ADTA GOOD bit can be set failed. Once the ADTA GOOD bit is set failed, 16 consecutive non-fail cycles for bits 5 through 13 are required before ADTA GOOD can be reset to the GOOD state.

NOMINAL ADTA MODE / STATUS WORD

BIT	1	2	3	4	5	6	7	8	9	10	11	12	13	14	15	16
	1	0	0	0	1	1	1	1	1	1	1	1	1	1	0	0

BIT DEFINITIONS

1	ADTA GOOD (1=GOOD, 0=FAILED)
2	spare (always 0)
3**	HIGH SELF-TEST MODE (1=TEST MODE ENGAGED, 0=TEST MODE NOT ENGAGED)
4**	LOW SELF-TEST MODE (1=TEST MODE ENGAGED, 0=TEST MODE NOT ENGAGED)
5*	P_{aL} TRANSDUCER GOOD (1=GOOD, 0=FAILED)
6*	P_{aU} TRANSDUCER GOOD (1=GOOD, 0=FAILED)
7*	P_{aC} TRANSDUCER GOOD (1=GOOD, 0=FAILED)
8*	P_S TRANSDUCER GOOD (1=GOOD, 0=FAILED)
9*	A/D CONVERTER GOOD (1=GOOD, 0=FAILED)
10*	ELECTRONICS GOOD (1=GOOD, 0=FAILED)
11*	TEMPERATURE CIRCUIT GOOD (1=GOOD, 0=FAILED)
12*	SUM CHECK GOOD (1=GOOD, 0=FAILED)
13*	POWER SUPPLY GOOD (1=GOOD, 0=FAILED)
14***	SELF-TEST DISCRETE INPUTS GOOD (1=GOOD, 0=FAILED)
15*	RAM MEMORY GOOD
16	FREQUENCY/DIGITAL GOOD

*	BFS will downmode if these are set to 0.
**	BFS will downmode if these are set to 1.
***	ADTA will not enter self-test if this bit set to 0.

This page intentionally blank

APPENDIX D
NAV-DERIVED AIR DATA AND DEFAULT AIR DATA

Even though probe-sensed air data is not used until Mach 2.5, the ADTA SOP provides an air data output dataset throughout entry (OPS 3 and 6). When ADTA pressures are not being used, provisions have been made to provide substitute inputs to the SOP. This substitution data is computed from a number of sources available elsewhere in the GNC flight software code. One data set composed of $\bar{q}$, M, and EAS is called Navigation-Derived Air Data (or NAVDAD). This dataset is computed in a separate SOP and is throughput to the ADTA SOP for use in the absence of probe data. TAS is provided by UPP software, which calculates and propagates parameters for users with state vector and/or attitude data. The Attitude Processor (ATT PROC) computes α (as well as other attitude terms) using IMU gimbal angles. Though not technically accurate, this entire set of software-computed air data terms is commonly referred to as NAVDAD. The ADTA SOP is designed so that it is possible for G&C to receive NAVDAD while navigation software uses real corrected pressure altitude from the probes. This can occur if probe-sensed data is available and required prior to M = 2.5, or if SPEC 50 ADTA TO G&C is inhibited while ADTA H is enabled.

As orbiter velocity slows below Mach 2.0, NAVDAD becomes a poor substitute for real air data because it does not account for winds in the lower atmosphere. In NAVDAD, relative velocity (groundspeed) is substituted for true airspeed, creating a nontrivial error source in the presence of high winds. These errors, when used by the Aerojet DAP to compute flight control gains, could lead to a loss of control. To avoid this situation, DEFAD is used below V_{REL} = 1500 fps. Alpha for G&C is “fixed” in the software at 7.5°, enabling the use of a lookup table where $\bar{q}$ becomes a function of NAV-derived V_{REL}. Other air data parameters (EAS, TAS, Mach number) are still provided by NAVDAD.

This page intentionally blank

APPENDIX E
TRAINING MATERIALS EVALUATION

Please answer the following questions regarding the lesson you just completed. Your feedback will allow *us to produce more effective training materials. When complete, mail to:* **Space Shuttle DPS/Navigation Department, DT35.**

TITLE/CODE OF LESSON: Air Data System Workbook/ADS 21002

SIZE OF AUDIENCE/CLASS:

1. How well did this lesson meet its purpose?
For each statement below, mark one box on the scale:

	Strongly Disagree				Strongly Agree
a. The lesson objectives are clearly stated.	☐	☐	☐	☐	☐
b. The lesson objectives are clearly defined.	☐	☐	☐	☐	☐
c. The lesson effectively teaches skills and information.	☐	☐	☐	☐	☐
d. The lesson meets its purpose and objectives.	☐	☐	☐	☐	☐

2. How satisfying is the content of this lesson?
For each statement below, mark one box on the scale:

	Strongly Disagree				Strongly Agree
a. The information is structured in a logical flow.	☐	☐	☐	☐	☐
b. The content is clear.	☐	☐	☐	☐	☐
c. The content is complete.	☐	☐	☐	☐	☐
d. The level of detail is correct for this information.	☐	☐	☐	☐	☐
e. The amount of information is effective.	☐	☐	☐	☐	☐
f. The graphics contribute to my understanding.	☐	☐	☐	☐	☐

3. How appealing was the presentation of this lesson?
For each statement below, mark one box on the scale:

	Strongly Disagree				Strongly Agree
a. The overall presentation is appealing.	☐	☐	☐	☐	☐
b. The visuals chosen are appropriate for the lesson.	☐	☐	☐	☐	☐
c. The visuals make the information more interesting.	☐	☐	☐	☐	☐
d. The graphics are legibly reproduced.	☐	☐	☐	☐	☐
e. The audio/visual or print quality is good.	☐	☐	☐	☐	☐

4. How valuable is this information?
For each statement below, mark one box on the scale:

	Strongly Disagree				Strongly Agree
a. The lesson teaches skills and information I need.	☐	☐	☐	☐	☐
b. The lesson meets my expectations.	☐	☐	☐	☐	☐
c. This information is useful for later reference.	☐	☐	☐	☐	☐
d. I would recommend this lesson to others.	☐	☐	☐	☐	☐

PLEASE WRITE YOUR COMMENTS/QUESTIONS ON THE BACK OF THIS FORM.
EXPLAIN ANY NEGATIVE ANSWERS IN SPECIFIC TERMS
THANK YOU IN ADVANCE FOR YOUR ASSISTANCE!