Space Shuttle Program
FLIGHT DATA FILE

JSC-48020-125

Entry Checklist

STS-125 Flight Supplement

Mission Operations Directorate
Flight Design and Dynamics Division

Final
March 7, 2008

National Aeronautics and
Space Administration

Lyndon B. Johnson Space Center
Houston, Texas

Verify this is the correct version for the pending operation (training, simulation or flight).
Electronic copies of FDF books are available. URL: http://mod.jsc.nasa.gov/do3/FDF/index.html

ENTRY C/L, STS-125 FLT SUPPL	FINAL (March 7, 2008)

PCN-3 (April 10, 2009) Sheet 1 of 1

List of Implemented Change Requests (482s):

ENT-0868 MULTI-1829
ENT FS-0880

Incorporate the following:

1. Replace FS xi thru FS xiv
2. Replace FS 3-29 & FS 3-30, FS 3-33 & FS 3-34
3. After 4-2, add TEMP FS 4-3 & TEMP FS 4-4
4. After FS CC 8-14, add TEMP FS CC 8-15 & TEMP FS CC 8-16
   Replace FS CC 8-23 & FS CC 8-24

NOTE

This supplement is to be integrated into the generic edition to provide a complete document for the specific flight. Some pages in the generic edition may be replaced with supplemental pages identified as 'TEMP'. These generic pages, if any, must be retained for use on future flights.

Prepared by: Marcia Trump
Book Manager

Lead, Entry GPO

Approved by:
Chief, Ascent/Descent Dynamics Branch

Encl: 14 pages

File this PCN immediately behind the front cover as a permanent record

ENTRY C/L, STS-125 FLT SUPPL	FINAL (March 7, 2008)

PCN-2 (Sept 25, 2008) Sheet 1 of 1

List of Implemented Change Requests (482s):

ENT_FS-0009 (S)
ENT_FS-0011

S – Superseded

Incorporate the following:

1. Replace FS xi & FS xii
2. Replace FS 3-33 & FS 3-34

Prepared by: Gwendolyn D. Jordan-Moore
Book Manager

Lead, Entry GPO

Approved by:
Chief, Ascent/Descent Dynamics Branch

Encl: 4 pages

File this PCN immediately behind the front cover as a permanent record

ENTRY C/L, STS-125 FLT SUPPL	FINAL (March 7, 2008)

PCN-1 (Apr 16, 2008) Sheet 1 of 1

List of Implemented Change Requests (482s):

MULTI-1816

Incorporate the following:

1. Replace FS xi thru FS xiv
2. Replace FS 4-5 thru FS 4-8
3. Replace FS CC 8-17 & FS CC 8-18

Prepared by: Allison McCagg
Book Manager

Steve J. Carpenter
Lead, Entry GPO

Approved by:
Chief, Ascent/Descent Dynamics Branch

Encl: 10 pages

File this PCN immediately behind the front cover as a permanent record

JSC-48020-125

MISSION OPERATIONS DIRECTORATE

ENTRY CHECKLIST
STS-125 FLIGHT SUPPLEMENT

FINAL
March 7, 2008

PREPARED BY:

Marcia M. Trump
Book Manager

APPROVED BY:

Steven G. Carothers
Lead Entry GPO

P. J. Bertsch
Chief, Ascent/Descent
Dynamics Branch

This document is under the configuration control of the Crew Procedures Control Board (CPCB). All proposed changes must be submitted via FDF Workflow Crew Procedure Change Request (CR) to DO3/FDF Manager.

Additional distribution of this book, for official use only, may be requested in writing to DO3/PMO Administrator. The request must include justification and requester's name, organization, position, and phone number. Contractor requests are made through the NASA or DOD organization supported. Deletions, reduction in quantity, or change of address may be submitted to DO3/FDF Management Office, 281-244-1184.

Incorporates the following:
482#: NONE – Establishes baseline

AREAS OF TECHNICAL RESPONSIBILITY

Book Manager	DM43/M. Trump	281-483-8029
Deorbit Burn to Entry Interface	DM43/G. Pogue	281-483-8067
Contingency Procedures and Entry Interface thru Rollout	DM43/G. Pogue	281-483-8067

NOTE

This Flight Supplement must be integrated into the generic Entry Checklist to have a complete document for flight. Insert the Flight Supplement (FS) pages in the proper numerical order in the generic Entry Checklist by using the List of Effective Pages (LOEP) which provides the sequence for merging pages to create a complete Entry Checklist.

ENTRY CHECKLIST
STS-125 FLIGHT SUPPLEMENT

LIST OF EFFECTIVE PAGES

FINAL	03/07/08
PCN-1	04/16/08
PCN-2	09/25/08
PCN-3	04/10/09

Sign Off	*	generic	FS 3-7		125/FIN
ii	*	generic	FS 3-8		125/FIN
Sign Off	*	125/FIN	3-9		generic
FS iv	*	125/FIN	3-10		generic
v	*	generic	3-11		generic
vi	*	generic	3-12		generic
vii	*	generic	3-13		generic
viii	*	generic	3-14		generic
ix	*	generic	FS 3-15		125/FIN
x	*	generic	FS 3-16		125/FIN
FS xi	*	125/FIN 3	FS 3-17		125/FIN
FS xii	*	125/FIN 3	FS 3-18		125/FIN
FS xiii	*	125/FIN 3	3-19		generic
FS xiv	*	125/FIN	3-20		generic
xi		generic	3-21		generic
xii		generic	3-22		generic
1-1 (3 pgs)	†	generic	3-23		generic
1-2 (3 pgs)	†	generic	3-24		generic
2-1		generic	3-25		generic
2-2 (6 pgs)	†	generic	3-26		generic
2-3 (6 pgs)	†	generic	3-27		generic
2-4		generic	3-28		generic
FS 2-5		125/FIN	FS 3-29		125/FIN 3
FS 2-6		125/FIN	FS 3-30		125/FIN
FS 3-1		125/FIN	3-31		generic
FS 3-2		125/FIN	3-32		generic
FS 3-3		125/FIN	FS 3-33		125/FIN 3
FS 3-4		125/FIN	FS 3-34		125/FIN
3-5		generic	3-35		generic
3-6		generic	3-36		generic

***** – Omit from flight book
† – Extra pages in crew copy only

3-37	generic		FS 5-19	125/FIN
3-38	generic		FS 5-20	125/FIN
3-39	generic		5-21	generic
3-40	generic		5-22	generic
3-41	generic		5-23	generic
3-42	generic		5-24	generic
3-43	generic		6-1	generic
3-44	generic		6-2	generic
4-1	generic		6-3	generic
4-2	generic		6-4	generic
TEMP FS 4-3	ALL/FIN 3	*	7-1	generic
TEMP FS 4-4	125/FIN 3	*	7-2	generic
FS 4-5	125/FIN 1	*	FS 8-1	125/FIN
FS 4-6	125/FIN	*	FS CC 8-2	125/FIN
FS 4-7	125/FIN 1	*	FS CC 8-3	125/FIN
FS 4-8	125/FIN	*	FS CC 8-4	125/FIN
FS 4-9	125/FIN	*	CC 8-5	generic
FS 4-10	125/FIN	*	CC 8-6	generic
4-11	generic	*	CC 8-7	generic
4-12	generic	*	CC 8-8	generic
5-1	generic	*	CC 8-9	generic
5-2	generic	*	CC 8-10	generic
5-3	generic	*	CC 8-11	generic
5-4	generic	*	CC 8-12	generic
5-5	generic	*	CC 8-13	generic
5-6	generic	*	CC 8-14	generic
5-7	generic	*	TEMP FS CC 8-15	ALL/FIN 3
5-8	generic	*	TEMP FS CC 8-16	125/FIN 3
5-9	generic	*	FS CC 8-17	125/FIN 1
5-10	generic	*	FS CC 8-18	125/FIN
5-11	generic	*	CC 8-19	generic
5-12	generic	*	8-20	generic
5-13	generic	*	CC 8-21	generic
5-14	generic	*	CC 8-22	generic
5-15	generic	*	FS CC 8-23	125/FIN 3
5-16	generic	*	FS CC 8-24	125/FIN
5-17	generic			
5-18	generic			

***** – Omit from flight book

ENTRY CUE CARDS

Title	Ref. Page	Card No.
DEORBIT BURN FLIGHT RULES (Front)	FS CC 8-2	ENT-1a/125/D/A
(Back)	FS CC 8-3	ENT-1b/125/D/A
DEORBIT BURN (RCS) (Front)	FS CC 8-4	ENT-3a/D/L
(Back)	CC 8-6	generic
DEORBIT BURN (2 ENG) (Front)	CC 8-8	generic
DEORBIT BURN (1 ENG) (Back)	CC 8-10	generic
UNBALANCED PRPLT DEORBIT BURN (Front)	CC 8-12	generic
DEORBIT BURN (MIXED XFEED) (Back)	CC 8-14	generic
ENTRY MANEUVERS (Front)	TEMP FS CC 8-16	ENT-6a/125/E/A
(Back)	FS CC 8-17	ENT-6b/125/E/B
ENTRY NO-GO CHECKLIST (Front)	FS CC 8-18	ENT-7a/E/K
EMERGENCY EGRESS (Back)	CC 8-19	generic
ENTRY CONTROL (Front)	CC 8-21	generic
(Back)	CC 8-22	generic
DEORBIT BURN MONITOR (Front)	FS CC 8-23	ENT-2a/125/A,O,D,E/B
OMS FAILURES (Back)	FS CC 8-24	ENT-2b/125/A,O,D,E/A

This Page Intentionally Blank

OMS/RCS ΔV

OMS/
RCS ΔV

OMS He PRESS/ΔV/BURN TIME

OMS% GAGE	OMS He Press *	OMS ΔV	RCS ΔV	RCS BURN MIN:SEC
50	3270	252	209	7:20
40	2870	197	164	5:44
38	2790	186	155	5:24
36	2710	175	146	5:05
34	2630	164	137	4:46
32	2550	153	128	4:27
30	2470	142	118	4:08
28	2390	131	109	3:48
26	2310	120	100	3:29
24	2230	108	91	3:10
22	2150	97	82	2:51
20	2070	86	73	2:32
18	1990	75	63	2:13
16	1910	64	54	1:53
14	1830	53	44	1:33
12	1750	41	35	1:13
10	1670	30	25	0:54
8	1590	19	16	0:34
6	1510	8	6	0:14
5	1470	2	2	0:04

* He pressure not valid until 1 hr after last burn

ΔV CAPABILITY
ARCS ΔV fps = [0.8] x [L% + R% - AFT QTY 1]
FRCS ΔV fps = [0.9] x FRCS %
OMS ΔV fps = [5.5] x OMS %

NOTE: Uses assumed vehicle weight of 237,968 lb

DEORBIT BURN

DEORBIT BURN

DEORBIT BURN

STS-125 LANDING SITE TABLE
(28.45° to 49.9° INCLINATION)

SITE	LOCATION	RWY	TACANS		MLS CH	LG	+ OVR RUN
				ITEM 5			
1	KSC	KSC 15 KSC 33	TTS 59Y	COF 97	8 6	15000 15000	1000 1000
2	BEN GUERIR	BEN 36 BEN 18	MAK 80 ■	CBA 116 ■	- -	13720 13220	0 1000
3	MORON AB	MRN 20 MRN 02	MRN 100	AOG 23	◆6 -	11730 11730	1000 1000
4	ZARAGOZA	ZZA 30L ZZA 12R	ZZA 64	ZAR 77 ■	◆6 -	12200 12200	1000 1010
5	BANJUL INT'L	BYD 32 BYD 14	BJ 76 ■	YF 78 ■	- -	11820 11820	1000 1000
6	BERMUDA	BDA 30 BDA 12	BDA 86 ■	BDA 86 ■	- -	9210 9210	0 0
7	AMILCAR CABRAL	AML 01 AML 19	CVS 100 ■	CVS 100 ■	- -	9350 9350	0 0
8	LAS PALMAS	GDV 03L GDV 21R	TGN 103	LPC 97 ■	- -	9670 9670	0 0
9	LAJES	LAJ 15 LAJ 33	TRM 109	LAJ 45	- -	10870 10870	970 990
10	BEJA	BEJ 01L BEJ 19R	MOJ 37	BEJ 105	- -	10820 10820	0 900
11	ISTRES AB	FMI 33 FMI 15	◆ FMI 16	NIM 53	◆6 -	11300 12300	3960 0
12	WILMINGTON INT'L	ILM 06 ILM 24	ILM 117	DIW 107 ■	- -	7500 7500	0 0
13	*MORON AB	MRN 20 MRN 02	MRN 100	AOG 23	◆6 -	11730 11730	1000 1000
14	CHERRY POINT	NKT 32L NKT 23R	EWN 83 ■	NCA 101	- -	7110 7100	800 880
15	MATAVERI INT'L	EIP 10 EIP 28	IPA 118 ■	IPA 118 ■	- -	10390 10390	0 0

◆ Available for TAL Only
* LO XRNG TAL Site
■ DME
Length after displaced threshold

STS-125 LANDING SITE TABLE
(28.45° to 49.9° INCLINATION)

SITE	LOCATION	RWY	TACANS		MLS CH	LG	+ OVR RUN
				ITEM 5			
16	MONROVIA	LRB 04 LRB 22	ROB 85 ■	ROB 85 ■	- -	9300 9300	0 0
17	NDJILI INT'L	KIN 24 KIN 06	KSA 97 ■	BZ 78 ■	- -	14920 14920	0 0
18	HOEDSPRUIT	AHS 18 AHS 36	HSV 87	NSV 109 ■	- -	13100 13100	980 1740
19	TAMANRASSET	AAT 02 AAT 20	TMS 72 ■	TMS 72 ■	- -	11310 11310	0 0
20	SOUDA	GSA 29 GSA 11	PLH 93 ■	RKL 20	- -	10490 10490	0 0
21	KING KHALID	KKI 15R KKI 33L	RIY 92	KIA 80	- -	13300 13300	0 0
22	DIEGO GARCIA	JDG 31 JDG 13	NKW 57	NKW 57	- -	12000 12000	950 950
23	PEARCE	PEA 18L PEA 36R	PEA 75	PH 84 ■	- -	7500 7500	0 0
24	TINDAL RAAF	PTN 14 PTN 32	TDL 70	TDL 70	- -	8500 8500	0 0
25	AMBERLEY	AMB 15 AMB 33	AMB 94	BN 79 ■	- -	9500 9500	0 0
26	YOKOTA AB	JTY 36 JTY 18	SHT 19	NJA 98	- -	11000 11000	1000 1000
27	ANDERSEN AFB	GUA 06L GUA 24R	UAM 54	UNZ 105	- -	10560 10560	1050 1000
28	WAKE ISLAND	WAK 28 WAK 10	AWK 82	AWK 82	- -	9360 9360	0 0
29	HONOLULU	HNL 08R HNL 26L	HNL 95	NGF 93	- -	11500 11500	0 0
30	HAO ATOLL	HAO 12 HAO 30	HAO 85 ■	HAO 85 ■	- -	10390 10390	0 0

■ DME
Length after displaced threshold

STS-125 LANDING SITE TABLE
(28.45° to 49.9° INCLINATION)

SITE	LOCATION	RWY	TACANS		MLS CH	LG	+ OVR RUN
				ITEM 5			
31	ASCENSION	HAW 13 HAW 31	ASI 59	ASI 59	- -	9520 9520	0 0
32	ESENBOGA	ESN 03R ESN 21L	BAG 78 ■	BUK 90 ■	- -	11800 11800	0 0
33	NASSAU	YNN 14 YNN 32	NCZ 74Y	ZQA 74 ■	- -	10520 10520	0 0
34	SKID STRIP	PMR 13 PMR 31	TTS 59Y	COF 97	- -	9500 9500	0 0
35	ORLANDO INT'L	MCO 18R MCO 36L	TTS 59Y	COF 97	- -	11500 12000	700 200
36	CECIL FIELD	NZC 18L NZC 36R	CRG 92	SGJ 31 ■	- -	12000 12000	0 0
37	MACDILL AFB	MCF 04 MCF 22	PIE 111	MCF 47	- -	10920 10920	0 0
38	CHINA LAKE	NID 03 NID 21	NID 53	EDW 111	- -	9490 9490	0 0
39	VANDENBERG	VBG 12 VBG 30	VBG 59Y	MQO 71	- -	14500 14500	0 0
40	EDW TEMP	EDT 22R EDT 04L	EDW 111	LHS 21	8 6	12000 12000	1000 1000
41	NORTHRUP	NOR 17 NOR 23	SNG 121Y	HMN 92	6 6	15000 15000	Lkbd Lkbd
42	NORTHRUP	NOR 05 NOR 35	SNG 121Y	HMN 92	- -	15000 15000	Lkbd Lkbd
43	EDWARDS AFB	EDW 15 EDW 33	EDW 111	LHS 21	- -	16300 16300	Lkbd Lkbd
44	EDWARDS AFB	EDW 18L EDW 18L	EDW 111	LHS 21	- -	15000 15000	Lkbd Lkbd
45	EDWARDS AFB	EDW 22 EDW 04	EDW 111	LHS 21	8/† 6	15010 14010	0 1800

† MSBLS Jr. Ch 8 - Requires Uplink

■ DME

Length after displaced threshold

1: GNC DEORB MNVR COAST	2: GNC 50 HORIZ SIT
	3: BFS, GNC 50 HORIZ SIT

HORIZ SIT CONFIG

ALTM – ITEM 9 + [ ][ ] . [ ][ ]

	PASS ITEM		BFS ITEM	
PTI	INH	√1		
LAND SITE (DEL PAD)		√41		√41
RWY (DEL PAD)		√3		√3
		√4		√4
TACAN (DEL PAD)		√5		√5
RA	blank	√46		
TAEM TGT				
G&N	OVHD	√6	blank	
HSI	blank		blank	
XEP	NEP	√7	NEP	√7
AIM (DEL PAD)	NOM (or CLSE)	√8	NOM or (CLSE)	√8
SPDBK	NOM	√39		
TAC	INH	√20	INH	√20
GPS	INH	√43	INH	√43
DRAG H	AUT	√22	AUT	√22
ADTA H	INH	√26	INH	√26
ADTA TO G&C	INH	√29	AUT	√28
DES any failed TACANs		√		√
TAC	DELTA	√35		
AIF_G	INH	√48		

* If BFS engaged: *
* Set BFS HSD ITEMs to PASS config *

G51 SEL ATMOSPHERE:
incl ≤ 50° ITEM 22 EXEC
incl > 50° SEL ITEM NR (table)

Hemi	Jan	Feb	Mar	Apr	May	Jun	Jul	Aug	Sep	Oct	Nov	Dec
N Desc	23	23	23	23	22	24	24	24	22	23	23	23
S Asc	24	24	22	23	23	23	23	23	23	23	22	24
N Asc	22											
S Desc												

1: GNC DEORB MNVR COAST	2: GNC 50 HORIZ SIT

3: GNC 51 OVERRIDE

√ELEVON AUTO – ITEM 17 (*)
√SSME REPOS – ITEM 19 (ENA)
√WRAP MODE – ITEM 45 (ENA)
If PLB holding > 10K lb:
FILTER ALT – ITEM 21 EXEC (*)

3: BFS, GNC 51 OVERRIDE

√ELEVON AUTO – ITEM 17 (*)
√SSME REPOS – ITEM 19 (ENA)
√WRAP MODE – ITEM 45 (ENA)
If PLB holding > 10K lb:
√FILTER ALT – ITEM 21 (*)

* DES any failed/comm faulted *
* IMU, RGA, AA, or SURF feedback *

2: GNC DEORB MNVR COAST

3: BFS, GNC DEORB MNVR COAST

√BFS GMBL sel config same as PASS GMBL sel config

DEORBIT BURN CARDS

BURN CARDS

DEORBIT BURN FLIGHT RULES
ONE-ORBIT LATE AVAILABLE ENT-1a/125/D/A

	FAILURE	PRE TIG Delay (max) One Orbit	PRE TIG Delay (max) One Day	POST TIG Stop Burn, > Safe HP
	APU/HYD			
1	No APU operating	X		
	DPS			
2	RDNT fail, Split		X	X
3	1 GPC	X		
4	BFS		X	
5	GPC BITE (Multiple GPCs)		X	
	ECLS			
6	2 Av Bay Fans in Bay 3	X		
7	2 Av Bay Fans in Bay 1 or 2		X	
	ELEC			
8	H2 Manf or TK leak (not in depleted tk(s) _____)	X		
9	2 MN Buses		X	X
10	CNTL CA1 (No BFS Engage in GPC 3/5)		X	
11	Multi Φ AC BUS (unshorted)	X		
	GNC			
12	1 MLS (if reqd), IMU, or TACAN (C-band not avail)	X		
13	IMU Dilemma		X	X
14	RHC Dilemma	X		
15	2 IMUs (Not targeting EDW/NOR)		X	
16	2 ADTAs (Winds>80kts or Dynamic Wx)	X		
	HOOK VELCRO			**HOOK VELCRO**
17	2 FCS Channels (same surface) (Not targeting NOR/EDW)	X		
18	2 AAs, RGAs (Not targeting EDW/NOR)	X		
	OMS			
19	Prplt Tank	X		X ①
20	Ignition (neither eng ignites)	X		
21	Both OMS Eng fail			X ②
22	Prplt Lk after LAST LOS	perigee adjust		
	AFT RCS			
23	2 jets, same direction, same pod	X		
24	Prplt Lk after LAST LOS	X		
25	1 AFT RCS PROP TK fail	X		
	COMM			
26	MCC GO for DEORBIT not rcvd		X	

① Stop Burn > OMS PRPLT FAIL HP (Ref: DEL PAD/BURN Card)
② Stop Burn > OMS ENG FAIL HP (Ref: DEL PAD/BURN Card)

BURN CARDS

DEORBIT BURN FLIGHT RULES
ONE-ORBIT LATE NOT AVAILABLE ENT-1b/125/D/A

	FAILURE	PRE TIG Delay (max) One Day	POST TIG Stop Burn, > Safe HP
	APU/HYD		
1	No APU operating	X	
	DPS		
2	RDNT fail, Split	X	X
3	1 GPC		
4	BFS	X	
5	GPC BITE (Multiple GPCs)	X	
	ECLS		
6	2 Av Bay Fans in Bay 3		
7	2 Av Bay Fans in Bay 1 or 2	X	
	ELEC		
8	H2 Manf or TK leak (not in depleted tk(s) _____)	X	
9	2 MN Buses	X	X
10	CNTL CA1 (No BFS Engage in GPC 3/5)	X	
11	Multi Φ AC BUS (unshorted)		
	GNC		
12	1 MLS (if reqd), IMU, or TACAN (C-band not avail)	X	
13	IMU Dilemma	X	X
14	RHC Dilemma	X	
15	2 IMUs (Not targeting EDW/NOR)	X	
16	2 ADTAs (Winds>80kts or Dynamic Wx)	X	
	HOOK VELCRO		**HOOK VELCRO**
17	2 FCS Channels (same surface) (Not targeting NOR/EDW)	X	
18	2 AAs, RGAs (Not targeting EDW/NOR)	X	
	OMS		
19	Prplt Tank	X	X ①
20	Ignition (neither eng ignites)	X	
21	Both OMS Eng fail		X ②
22	Prplt Lk after LAST LOS	perigee adjust	
	AFT RCS		
23	2 jets, same direction, same pod	X	
24	Prplt Lk after LAST LOS	X	
25	1 AFT RCS PROP TK fail	X	
	COMM		
26	MCC GO for DEORBIT not rcvd	X	

① Stop Burn > OMS PRPLT FAIL HP (Ref: DEL PAD/BURN Card)
② Stop Burn > OMS ENG FAIL HP (Ref: DEL PAD/BURN Card)

DEORBIT BURN (2 ENG)

√MM302 √OMS BOTH
Enter TGO + 5 sec
√TRIM per MNVR PAD or P +0.0, LY -5.7, RY +5.7
L,R OMS He PRESS/VAP ISOL A (two) – GPC
B (two) – OP
√DAP – AUTO(PASS)/DISC
ADI – LVLH(REF)/HI/MED
FLT CNTLR PWR (two) – ON

TIG-2 OMS ENG (two) – ARM/PRESS
- :15 EXEC (NO EXEC > TIG + [ ] : [ ])
- :15 If OMS AFT QTY < 11%, THC +X to OMS IGN + 1 sec
:00 TIG Start watch (√P_C, ΔVTOT, ENG VLVs)
If no OMS ignition: APUs – SHUT DN

OMS PRPLT FAIL:

Failed OMS ENG – OFF

L OMS FAIL HP [ ] R OMS FAIL HP [ ]

STOP BURN:
Good OMS ENG – OFF
APUs – SHUT DN
Secure aff OMS

CONTINUE BURN:
ITEM 18 +0 EXEC
When good OMS QTY:
5%: L,R OMS XFEED (four) – OP
4%: Good OMS TK ISOL (two) – CL
If OMS P_C < 80 or OMS TEMP,
OMS ENG – OFF
√ADI – LVLH, center needles
RCS COMPLETION

OMS ENG FAIL:

Failed OMS ENG – OFF
OMS XFEED at 1/2 ΔVTOT at fail [ ]
or OMS QTY [ ] %L or [ ] %R

2nd OMS FAIL (ENG or PRPLT):

Failed OMS ENG – OFF
If PRPLT FAIL:
Secure aff OMS
ITEM 18 +0 EXEC

Both ENG FAIL HP [ ] Either PRPLT FAIL (SAFE) HP [ ]

STOP BURN:
APUs – SHUT DN

CONTINUE BURN:
√ADI – LVLH, center needles
Interconnect good OMS to RCS
THC +X (√OMS% vs RCS Burn Time)
RCS I'CNCT TK SW (N/A PRPLT FAIL)
THC +X (√OMS% vs RCS Burn Time)
AFT RCS RECONFIG
RCS COMPLETION

ENT-4a/D/L

DEORBIT BURN MONITOR

OMS TEMP*		
FU IN P	≥ L 230, R 230	OMS ENG FAIL
	≤ L 214, R 212	OMS PRPLT FAIL
or No FU IN P		
OMS PC* & OMS ↓ (BFS: √accel)		
ENG VLV 1 or 2 < 70		OMS ENG FAIL
or	OX IN P > 227	
	OX IN P ≤ 227 or No OX IN P	OMS PRPLT FAIL
OMS OX/FU TK P (√ENG IN P)		
OX/FU LOW		He PRESS/VAP ISOL (two) – OP If aff TK P not incr: He PRESS/VAP ISOL (two) – CL At PC < 72 or OMS TEMP: OMS PRPLT FAIL
OX & FU HIGH		He PRESS/VAP ISOL (two) – CL Cycle He A(B) to maintain TK P 234-284
OMS GMBL	PRI fail	L(R) OMS GMBL – SEC (twice)
	SEC fail	If high RCS usage: OMS ENG FAIL
GPC	**1(4) &** Burning OMS aff	aff GPC PWR – OFF If SEC GMBL avail: aff MDM FF 1(4) – OFF,ON L(R) OMS GMBL – SEC (twice)
	SEC GMBL lost	If high RCS usage: OMS ENG FAIL
	2 FAs lost	√MAN SHUTDN
I/O ERROR FA	**1(4)**	L(R) OMS GMBL – SEC
		♦I/O RESET (if recov: BFS I/O RESET) If high RCS usage: OMS ENG FAIL
	2 FAs lost	√MAN SHUTDN
BCE STRG D		I/O RESET (if recov: >>)
	1(4)	If high RCS usage: L(R) OMS GMBL – SEC (twice)
RM DLMA IMU or **GPC SET SPLIT** or **2 MN BUSES**	**ABOVE SAFE** HP ⇒ [ ][ ]	STOP BURN: OMS ENG(s) – OFF >>
	BELOW SAFE HP ⇒	IMU DLMA: After C/O: √timer [G21] If any IMU ACC > 0.03: aff IMU – desel I'cnct OMS to RCS (√RCS Burn Time) THC +X to TGT HP (EOM) or 3.5 x timer at C/O (AOA) SET SPLIT: Go to "GPC" above
I/O ERROR PCM		OI PCMMU PWR – 2(1)

*If XFD, BLDN, or sensor fail, monitor ENG IN P for off-nominal performance

ENT-2a/125/A,O,D,E/B

OMS FAILURES

LEFT OMS

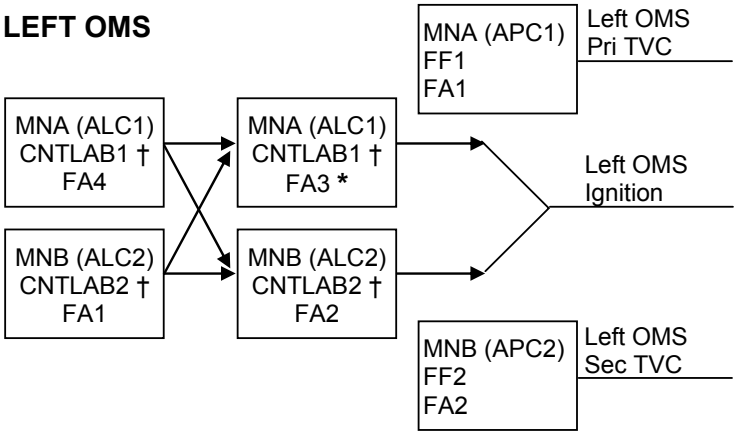

† If CNTL AB1 or AB2 (CA1 or CA2) failed and ign path still exists at OMS fail, assume L(R) OMS ↓ is PRPLT FAIL

* If L(R) P_C failed high during burn, or FA3(4) failed, at L(R) OMS fail, no guidance downmode after L(R) OMS ENG switch OFF (TGO slow, ADI needles in error, 6 ft/s underburn)

RIGHT OMS

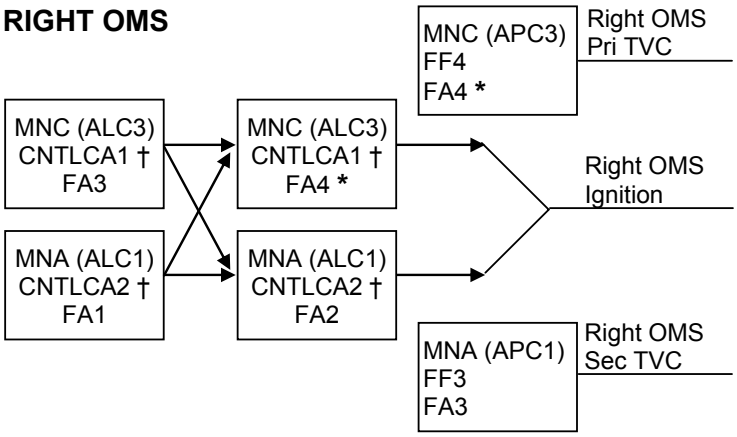

If two FA MDMs lost		
MDMs	Preburn: ENG – OFF	During burn: MAN SHUTDN
1,2	LEFT (TVC)	BOTH
1,3	RIGHT (IGN)	LEFT
1,4	LEFT (IGN)	RIGHT
2,3	LEFT (IGN)	RIGHT
2,4	RIGHT (IGN)	LEFT
3,4	RIGHT (TVC)	BOTH

ENT-2b/125/A,O,D,E/A

1: GNC DEORB MNVR EXEC	2: GNC DEORB MNVR EXEC

3: BFS, GNC SYS SUMM 2

*** UNDERBURN ***
* Determine ΔHP (CUR HP – TGT HP) *
* Record prebank on ENTRY MANEUVERS Cue Card *

PREBANK TABLE EDW (HA = 302 NM)

EDW									
ΔHP	0	3	7	10	REDES.	11	12	13	REDES.
PREBANK	0	75	110	130	NOR ELS	145	160	170	KSC
NOR						IF NOR NOGO			

G50 ITEM 41 +4 1, √RWY 17 SET TACAN tw (three) 121Y

ΔHP	8	9	11	13	14	15	16	REDES.
PREBANK	95	100	110	130	145	165	170	KSC

KSC

G50 ITEM 41 +0 1, √RWY 15 SET TACAN tw (three) 59Y

ΔHP	14	17	18	19	20	21
PREBANK	100	125	140	155	175	170

125 ocf

PREBANK TABLE KSC (HA = 306 NM)

KSC									
ΔHP	0	2	4	6	8	10	12	13	REDES.
PREBANK	0	55	85	100	110	130	160	170	BDA

BDA

G50 ITEM 41 +0 6, √RWY 30 SET TACAN tw (three) 86X

ΔHP	14	16	18	RED.
PREBANK	125	155	170	AML

AML

G50 ITEM 41 +0 7, √RWY 01 SET TACAN tw (three) 100X

ΔHP	19	22
PREBANK	120	170

1: GNC DEORB MNVR EXEC	2: GNC DEORB MNVR EXEC

3: BFS, GNC SYS SUMM 2

C CRT1 **GNC, OPS 303 PRO**

1: GNC DEORB MNVR COAST	2: GNC DEORB MNVR COAST

C CRT1 √Uplinked INRTL EI-5 MM303 ATT with DEL PAD

```
* If no deorbit TGT uplink, enter INRTL EI-5  *
*   MM303 ATT from DEL PAD                     *
* R – ITEM 24 + ___ ___ ___  ___ ___ ___       *
* P – ITEM 25 + ___ ___ ___  ___ ___ ___       *
* Y – ITEM 26 + ___ ___ ___  ___ ___ ___       *
```

Mnvr to EI-5 ATT – ITEM 27 EXEC (*)

```
* If UNDERBURN or no  *
*   DEL PAD, manually *
*   mnvr to LVLH R 001, *
*   Y 358, P per table  *
```

TIME to EI (min)	LVLH PITCH (deg)
20	339
	343
	347
	351
	355
15	359
	3
	7
	11
	15
10	19
	23
	27
	31
	35
5	39

C **OMS GMBL PWRDN (PASS ONLY)**

CRT1 Verify GMBL positions:

	L	R
P	+5.9	+5.9
Y	+6.4	-6.4

GMBL OFF – ITEM 32 EXEC
– ITEM 33 EXEC

ENTRY NO-GO CHECKLIST

FAILURE OF:	AERO PTI DTO	AUTO FCS MODE	XWIND DTO ①
APU/HYD: 1 APU			X
2 APUs	X		X
DISPLAYS: 2 ADIs	X		
CDR HUD			X ②
CONTROLLERS:			
RHC: 1L			X
2L & 2R	X		X
RPTA: 2L or 2R			X
GNC: 2 AAs (LAT)	X		X
2 AAs (NORM)	X(M < 2.5)	X ③	
2 RGAs	X		X
2 R DDU PWR SPLY			X
2 IMU (or 1 IMU + BITE)	X		X
2 ADTAs			X
ADTA NOT INCORP OR DLMA		X (M < 2)	
MLS NOT INCORP		X (< 6K ft)	
2 FCS CH (same surface)	X		X
DPS: 1 GPC (not restrung)			X ④
2 GPC (restrung)	X		
2 GPC (not restrung)	X	X ③	X
1 FF			X ④
2 FF	X	X ③	X
2 FA	X		X
RCS: LEAK (AFT – during ENT)	X		
2 YAW JETs (same side)	X		
MIN RCS QTY	X		
TRIM: Ail > ± 2.0 deg	X		
DOWNMODE:			
FCS problem	X	X	X
AOA	X		X
PLB: PLBD Latch Gang	X		
LDG/DECEL:			
Tire Leak			X
HYD BRAKE ISOL VLV			X
< 100% Brakes			X
NWS			X
ENERGY – OFF NOMINAL:			
Roll Ref Alert	X		
Above Upper Traj Line	X		
MCC GCA, or VEL & PSN update	X	X	
No A/L by 6K ft		X	
DATA: SOLID STATE RECORDERS	X (LOS)		
XWIND:			
< 10 Knots Peak			X
> 15 Knots Peak			X
> 10 Knots Gust			X
GROUND SYSTEMS:			
No Runway Aim Point			X

NOTES

① Consider runway redesignation (M > 6) to avoid Xwind landing

② GO if PAPI and BALL BAR available

③ Pitch AUTO mode NO-GO for M < 2.5

④ GO if only string 4 affected

ENTRY MANEUVERS

FLIGHT CONDITIONS	MANEUVER
EI-5	√LVLH ATT GNC, OPS 304 PRO * If PREBANK, R/Y – CSS * * Roll at 1°/sec to * * [1 8 0] if HP ≥ 47, else * * [ ] (from Prebank Table) * * Maintain PREBANK ±5° * If previous OMS OX TK, He TK, or RCS OX TK leak: [G51] VENT DOOR CNTL OPEN – ITEM 43 EXEC (AOA) [SPI] When SB position – 0%: √HYD MN PUMP PRESS (three) – LO
$\bar{q}$ = 1	(AOA) HYD MN PUMP PRESS (three) – NORM
'Guidance Box' @ $\bar{q}$ ~ 8 or D ~ 3	CLOSED LOOP GUIDANCE ____:____:____ * If PREBANK: P,R/Y – AUTO * Begin AIL trim monitoring
V = 24K	If previous OMS OX TK, He TK, or RCS OX TK leak: [G51] VENT DOOR CNTL CLOSE – ITEM 44 EXEC
D = 11	√DRAG H
ΔAz = 10.5°	FIRST ROLL REVERSAL [ ] (DEL PAD)
V = 19K	√HYD MPS/TVC ISOL VLV SYS (three) – CL
V = 15K	√NAVAIDS (I/O RESET if reqd)
V = 12K	RAD BYP VLV MODE (two) – AUTO CNTLR LOOP (two) – AUTO B(A)
V = 10K	√SPDBK to 81%

ENT-6a/125/E/A

FLIGHT CONDITIONS	MANEUVER
V = 7K	G50 √TACAN and GPS, INCORPORATE * If ELS: UHF MODE – G T/R *
V = 5K	ADTA PROBES – DEPLOY (√HEAT) Begin AIL and RUD trim monitoring
M = 3.5	If previous OMS OX TK, He TK, or RCS OX TK leak: G51 VENT DOOR CNTL OPEN – ITEM 43 EXEC
M = 2.7	√APUs HUD PWR (two) – ON
* If M < 2.5; P CSS for ADTA to G&C incorp *	
M = 2.0	Ensure ADTA to G&C else √Theta limits
M < 1.0	√R FLT CNTLR – ON P,R/Y – CSS as reqd √SPDBK CMD vs POS √NWS – 1 Lock Inertia Reels MAX N_Z [ ] . [ ]
M = 0.7	√LG EXTD ISO VLV – OP
h = 15K	√MLS
h = 10K	√A/L (KSC – Tabs, Visors, Suit O2)
h = 2K	LDG GEAR ARM pb – push (ARM lt on)
h = 300	LDG GEAR DN pb – push (DN lt on)
MAIN GEAR TD	√SPDBK – 100%
V = 195 KEAS	DRAG CHUTE ARM, DPY pb (two) – push (simo) (All lts on)
V = 185 KEAS	DEROTATE
NOSE GEAR TD	SRB SEP – MAN/AUTO and depress pb √Auto Load Relief √HYD BK ISOL VLV (three) – OP
V < 120 KGS or 5K' remaining	BRAKE as required (8-10 fps^2, -0.25 to -0.3G)
* If 5K' remaining and V > 140 KGS – MAX BRAKING *	
V = 60 KGS	DRAG CHUTE JETT pb – push (JETT1,JETT2 lt on)
V = 40 KGS	BRAKE < 6 fps^2 (-0.2G) (Antiskid cutout)
WHEEL STOP	Go to ENT C/L, POST LANDING PROCEDURES

ENT-6b/125/E/B
(Partial)

This Page Intentionally Blank

DRAG CHUTE DEPLOY

MCC Call	Flight Condition
Early	Main Gear TD
NOMINAL	**195 KEAS**
Late	Post-Nose Gear TD Xwind DTO
Emergency Only	No Deploy Except CDR call
NO DEPLOY prior to MGTD > 230 KEAS < 80 KGS Xwind > 15 kts	

FAILED TIRE TECHNIQUE

Post-MGTD	P – AUTO
185 KEAS	Deploy drag chute
180 KEAS	√Auto derotation
NGTD	Max RHC roll away from failed tire

50K	/
38K	/
28K	/
20K	/
12K	/
7K	/
3K	/
1K	/
SURF	/

ENT-6b/125/E/B
(Partial)

This Page Intentionally Blank

ENTRY ALPHA

VR	α ref	R	H	$\dot{H}$ref	Rref
25	HI 40 LO	4321	400		
24	HI 40 LO	2741	247	-43	R85
23	43 40 37	2235	238	-60	74
22	43 40 37	1863	232	-78	68
21	43 40 37	1564	225	-99	L63
20	43 40 37	1331	220	-115	61
19	43 40 37	1145	212	-136	62
18	43 40 37	996	205	-158	62
17	43 40 37	871	199	-176	63
16	43 40 37	773	192	-186	64

KSC 15

MAX L/D	
M	α
3	17
2	15
1	12

(125 OCF CY)

HOOK VELCRO

ASC-14b/125/A,E/A

HOOK VELCRO

HOOK VELCRO

15	43 40 37	685	186	-201	65	
14	43 40 37	612	181	-127	63	
13	43 40 37	545	177	-137	61	
12	43 40 37	482	173	-153	59	
11	42 39 36	426	167	-194		R57
10	41 38 35	376	164	-172		49
9	39 36 33	325	158	-207		44
8	37 34 31	278	151	-237		41
7	33 30 27	230	141	-267		39
6	30 27 24	183	130	-272		41
5	26 23 20	142	117	-273		42
4	23 20 18	107	105	-263	L39	
3	19 16 15	74	89	-248	38	
2.5	14	60	82	-202		
2	12	49	76	-285		
1.5	9	37	64	-333		
1	8	28	50	-262		

HOOK VELCRO

This Page Intentionally Blank

1:	2:
3:	

POST LANDING PAYLOAD ACTIVITIES

N/A

This Page Intentionally Blank

ENTRY CUE CARD CONFIG

DEORBIT BURN FLIGHT RULES
ONE-ORBIT LATE AVAILABLE ENT-1a/125/D/A

	FAILURE	PRE TIG Delay (max) One Orbit	PRE TIG Delay (max) One Day	POST TIG Stop Burn, > Safe HP
	APU/HYD			
1	No APU operating	... X ...	.....	
	DPS			
2	RDNT fail, Split	.....	...X....	X
3	1 GPC	... X ...	.....	
4	BFS	.....	...X....	
5	GPC BITE (Multiple GPCs)	.....	...X....	
	ECLS			
6	2 Av Bay Fans in Bay 3	... X ...	.....	
7	2 Av Bay Fans in Bay 1 or 2	.....	...X....	
	ELEC			
8	H2 Manf or TK leak (not in depleted tk(s) _____)	... X ...	.....	
9	2 MN Buses	.....	...X....	X
10	CNTL CA1 (No BFS Engage in GPC 3/5)	.....	...X....	
11	Multi Φ AC BUS (unshorted)	... X ...	.....	
	GNC			
12	1 MLS (if reqd), IMU, or TACAN (C-band not avail)	... X ...	.....	
13	IMU Dilemma	.....	...X....	X
14	RHC Dilemma	... X ...		
15	2 IMUs (Not targeting EDW/NOR)	.....	...X....	
16	2 ADTAs (Winds>80kts or Dynamic Wx)	... X ...	.....	
	HOOK VELCRO			**HOOK VELCRO**
17	2 FCS Channels (same surface) (Not targeting NOR/EDW)	... X ...	.....	
18	2 AAs, RGAs (Not targeting EDW/NOR)	... X ...	.....	
	OMS			
19	Prplt Tank	... X ...	.....	.....X ①
20	Ignition (neither eng ignites)	... X ...	.....	
21	Both OMS Eng fail	.....	.....	.....X ②
22	Prplt Lk after LAST LOS	perigee adjust		
	AFT RCS			
23	2 jets, same direction, same pod	... X ...	.....	
24	Prplt Lk after LAST LOS	... X ...	.....	
25	1 AFT RCS PROP TK fail	... X ...	.....	
	COMM			
26	MCC GO for DEORBIT not rcvd	.....	...X....	

① Stop Burn > OMS PRPLT FAIL HP (Ref: DEL PAD/BURN Card)
② Stop Burn > OMS ENG FAIL HP (Ref: DEL PAD/BURN Card)

(reduced copy)

TOP
BACK OF 'DEORBIT BURN FLIGHT RULES'

DEORBIT BURN FLIGHT RULES
ONE-ORBIT LATE NOT AVAILABLE ENT-1b/125/D/A

	FAILURE	PRE TIG Delay (max) One Day	POST TIG Stop Burn, > Safe HP
	APU/HYD		
1	No APU operating	X	
	DPS		
2	RDNT fail, Split	X	X
3	1 GPC		
4	BFS	X	
5	GPC BITE (Multiple GPCs)	X	
	ECLS		
6	2 Av Bay Fans in Bay 3		
7	2 Av Bay Fans in Bay 1 or 2	X	
	ELEC		
8	H2 Manf or TK leak (not in depleted tk(s) _____)	X	
9	2 MN Buses	X	X
10	CNTL CA1 (No BFS Engage in GPC 3/5)	X	
11	Multi Φ AC BUS (unshorted)		
	GNC		
12	1 MLS (if reqd), IMU, or TACAN (C-band not avail)	X	
13	IMU Dilemma	X	X
14	RHC Dilemma	X	
15	2 IMUs (Not targeting EDW/NOR)	X	
16	2 ADTAs (Winds>80kts or Dynamic Wx)	X	
	HOOK VELCRO		**HOOK VELCRO**
17	2 FCS Channels (same surface) (Not targeting NOR/EDW)	X	
18	2 AAs, RGAs (Not targeting EDW/NOR)	X	
	OMS		
19	Prplt Tank	X	X ①
20	Ignition (neither eng ignites)	X	
21	Both OMS Eng fail		X ②
22	Prplt Lk after LAST LOS	perigee adjust	
	AFT RCS		
23	2 jets, same direction, same pod	X	
24	Prplt Lk after LAST LOS	X	
25	1 AFT RCS PROP TK fail	X	
	COMM		
26	MCC GO for DEORBIT not rcvd	X	

① Stop Burn > OMS PRPLT FAIL HP (Ref: DEL PAD/BURN Card)
② Stop Burn > OMS ENG FAIL HP (Ref: DEL PAD/BURN Card)

(reduced copy)

TOP

HOOK VELCRO

DEORBIT BURN (RCS)

HOOK VELCRO

√MM302 √RCS SEL
√RCS BURN CONFIG (L OMS I'CNCT)
L,R OMS He PRESS/VAP ISOL A (two) – OP
. . . . . Wait 2 sec . . . . . B (two) – OP
√DAP – INRTL/DISC
ADI – LVLH(REF)/MED/MED
FLT CNTLR PWR (two) – ON

TIG THC +X (No Deorbit > TIG + [ ] : [ ][ ])
Maintain PITCH ATT ERR ± 3°
Monitor ΔVTOT:
RCS I'CNCT TK SW at ΔVTOT = [ ][ ][ ]
R OMS XFEED (two) – OP
L OMS XFEED (two) – CL

OMS PRPLT LOW
AFT RCS RECONFIG AT ΔVTOT = [ ][ ][ ]
RCS COMPLETION

OMS PRPLT FAIL (MULTIPLE JETS FAIL OFF):
Secure aff OMS
STOP BURN:
SAFE HP [ ][ ] APUs – SHUT DN

CONTINUE BURN:
ITEM 18 +0 EXEC
G23 Resel jets
Interconnect good OMS to RCS
THC +X (√OMS% vs RCS Burn Time)
AFT RCS RECONFIG
RCS COMPLETION

RCS +X JET FAIL OFF:
STOP BURN:
SAFE HP [ ][ ] APUs – SHUT DN

CONTINUE BURN:
ITEM 18 +0 EXEC
G23 Resel jets

ENT-3a/D/L

HINGE

(reduced copy)

TOP
HINGED AT BOTTOM OF 'DEORBIT BURN (MIXED XFEED)'
HINGE

OMS PRPLT FAIL:

OMS ENG – OFF

SAFE HP [ ][ ]

STOP BURN:
APUs – SHUT DN
Secure L,R OMS

CONTINUE BURN:
Secure L,R OMS
ITEM 18 +0 EXEC
√ADI – LVLH, center needles
RCS COMPLETION

OMS ENG FAIL:

OMS ENG – OFF

ENG FAIL HP [ ][ ][ ]

STOP BURN:
APUs – SHUT DN

CONTINUE BURN:
Man repress L,R OMS > L,R RCS TK Ps
FEED FROM GOOD POD:
[ ] OMS HE PRESS/VAP ISOL (two) – OP
TK ISOL (two) – OP
[ ] OMS XFEED (two) – CL
L,R RCS XFEED (four) – OP
TK ISOL (six) – CL
√ADI – LVLH, center needles
THC +X (√Lowest OMS % vs RCS Burn Time)
AFT RCS RECONFIG
RCS COMPLETION

RCS +X JET FAIL OFF:

SAFE HP [ ][ ][ ]

STOP BURN:
APUs – SHUT DN

CONTINUE BURN:
ITEM 18 +0 EXEC
G23 Resel jet

RCS COMPLETION:

THC +X to TGT HP or TOT AFT QTY 1 [ ][ ][ ] %

At AFT QTY 1 If CUR HP: THC +X to CAPTURE HP or TOT AFT QTY 2 [ ][ ] %
then PREBANK/FRCS COMPLETION to downrange site

CAPTURE HP [ ][ ] PREBANK/FRCS COMPLETION to downrange site

PREBANK/FLIP HP [ ][ ] PREBANK/FRCS COMPLETION

AFT HP [ ][ ] THC +X to TGT HP

TGT HP [ ][ ]

FRCS COMPLETION (if applicable)**:**

MNVR to -X Att (pitch up at 3°/sec to VGOz = +1/4 ΔVTOT)
THC -X to TGT HP or FRCS depletion (JETS FAIL OFF)

CUTOFF + :02 VGOx = 0, Release THC
OMS ENG(s) – OFF (if < 3 IMU, at [ ]:[ ][ ])
* AFT RCS RECONFIG if INTERCONNECT *
Trim X,Z residuals < 2 fps (< 0.5 fps if shallow)

ENT-5bb/D/K

(reduced copy)

TOP

PILE VELCRO

PILE VELCRO

ENTRY MANEUVERS

FLIGHT CONDITIONS	MANEUVER
EI-5	√LVLH ATT GNC, OPS 304 PRO * If PREBANK, R/Y – CSS * * Roll at 1°/sec to * * [1 8 0] if HP ≥ 47, else * * [ ] (from Prebank Table) * * Maintain PREBANK ±5° * If previous OMS OX TK, He TK, or RCS OX TK leak: [G51] VENT DOOR CNTL OPEN – ITEM 43 EXEC (AOA) [SPI] When SB position – 0%: √HYD MN PUMP PRESS (three) – LO
$\bar{q}$ = 1	(AOA) HYD MN PUMP PRESS (three) – NORM
'Guidance Box' @ $\bar{q}$ ~ 8 or D ~ 3	CLOSED LOOP GUIDANCE ____:____:____ * If PREBANK: P,R/Y – AUTO * Begin AIL trim monitoring
V = 24K	If previous OMS OX TK, He TK, or RCS OX TK leak: [G51] VENT DOOR CNTL CLOSE – ITEM 44 EXEC
D = 11	√DRAG H
$\Delta\Lambda z$ = 10.5°	FIRST ROLL REVERSAL [ ] (DEL PAD)
V = 19K	√HYD MPS/TVC ISOL VLV SYS (three) – CL
V = 15K	√NAVAIDS (I/O RESET if reqd)
V = 12K	RAD BYP VLV MODE (two) – AUTO CNTLR LOOP (two) – AUTO B(A)
V = 10K	√SPDBK to 81%

ENT-6a/125/E/A

PILE VELCRO

PILE VELCRO

(reduced copy)

TOP
BACK OF 'ENTRY MANEUVERS'

HOOK VELCRO

FLIGHT CONDITIONS	MANEUVER
V = 7K	G50 √TACAN and GPS, INCORPORATE * If ELS: UHF MODE – G T/R *
V = 5K	ADTA PROBES – DEPLOY (√HEAT) Begin AIL and RUD trim monitoring
M = 3.5	If previous OMS OX TK, He TK, or RCS OX TK leak: G51 VENT DOOR CNTL OPEN – ITEM 43 EXEC
M = 2.7	√APUs HUD PWR (two) – ON
* If M < 2.5; P CSS for ADTA to G&C incorp *	
M = 2.0	Ensure ADTA to G&C else √Theta limits
M < 1.0	√R FLT CNTLR – ON P,R/Y – CSS as reqd √SPDBK CMD vs POS √NWS – 1 Lock Inertia Reels MAX N_Z ___ . ___
M = 0.7	√LG EXTD ISO VLV – OP
h = 15K	√MLS
h = 10K	√A/L (KSC – Tabs, Visors, Suit O2)
h = 2K	LDG GEAR ARM pb – push (ARM lt on)
h = 300	LDG GEAR DN pb – push (DN lt on)
MAIN GEAR TD	√SPDBK – 100%
V = 195 KEAS	DRAG CHUTE ARM, DPY pb (two) – push (simo) (All lts on)
V = 185 KEAS	DEROTATE
NOSE GEAR TD	SRB SEP – MAN/AUTO and depress pb √Auto Load Relief √HYD BK ISOL VLV (three) – OP
V < 120 KGS or 5K' remaining	BRAKE as required (8-10 fps^2, -0.25 to -0.3G)
* If 5K' remaining and V > 140 KGS – MAX BRAKING *	
V = 60 KGS	DRAG CHUTE JETT pb – push (JETT1,JETT2 lt on)
V = 40 KGS	BRAKE < 6 fps^2 (-0.2G) (Antiskid cutout)
WHEEL STOP	Go to ENT C/L, POST LANDING PROCEDURES

DRAG CHUTE DEPLOY

MCC Call	Flight Condition
Early	Main Gear TD
NOMINAL	**195 KEAS**
Late	Post-Nose Gear TD Xwind DTO
Emergency Only	No Deploy Except CDR call
NO DEPLOY prior to MGTD > 230 KEAS < 80 KGS Xwind > 15 kts	

FAILED TIRE TECHNIQUE

Post-MGTD	P – AUTO
185 KEAS	Deploy drag chute
180 KEAS	√Auto derotation
NGTD	Max RHC roll away from failed tire

50K	/
38K	/
28K	/
20K	/
12K	/
7K	/
3K	/
1K	/
SURF	/

ENT-6b/125/E/B

HOOK VELCRO

HOOK VELCRO

HOOK VELCRO

HOOK VELCRO

(reduced copy)

FAB USE ONLY FS CC 8-17 ENT/125/FIN 1

TOP

HOOK VELCRO

HOOK VELCRO

ENTRY NO-GO CHECKLIST

FAILURE OF:	AERO PTI DTO	AUTO FCS MODE	XWIND DTO ①
APU/HYD: 1 APU			X
2 APUs	X		X
DISPLAYS: 2 ADIs	X		
CDR HUD			X ②
CONTROLLERS:			
RHC: 1L			X
2L & 2R	X		X
RPTA: 2L or 2R			X
GNC: 2 AAs (LAT)	X		X
2 AAs (NORM)	X(M < 2.5)	X ③	
2 RGAs	X		X
2 R DDU PWR SPLY			X
2 IMU (or 1 IMU + BITE)	X		X
2 ADTAs			X
ADTA NOT INCORP OR DLMA		X (M < 2)	
MLS NOT INCORP		X (< 6K ft)	
2 FCS CH (same surface)	X		X
DPS: 1 GPC (not restrung)			X ④
2 GPC (restrung)	X		
2 GPC (not restrung)	X	X ③	X
1 FF			X ④
2 FF	X	X ③	X
2 FA	X		X
RCS: LEAK (AFT – during ENT)	X		
2 YAW JETs (same side)	X		
MIN RCS QTY	X		
TRIM: All > ± 2.0 deg	X		
DOWNMODE:			
FCS problem	X	X	X
AOA	X		X
PLB: PLBD Latch Gang	X		
LDG/DECEL:			
Tire Leak			X
HYD BRAKE ISOL VLV			X
< 100% Brakes			X
NWS			X
ENERGY – OFF NOMINAL:			
Roll Ref Alert	X		
Above Upper Traj Line	X		
MCC GCA, or VEL & PSN update	X	X	
No A/L by 6K ft		X	
DATA: SOLID STATE RECORDERS	X (LOS)		
XWIND:			
< 10 Knots Peak			X
> 15 Knots Peak			X
> 10 Knots Gust			X
GROUND SYSTEMS:			
No Runway Aim Point			X

NOTES

① Consider runway redesignation (M > 6) to avoid Xwind landing
② GO if PAPI and BALL BAR available
③ Pitch AUTO mode NO-GO for M < 2.5
④ GO if only string 4 affected

HOOK VELCRO

HOOK VELCRO

HOOK VELCRO

HOOK VELCRO

HOOK VELCRO

HOOK VELCRO

TIME to EI (min)	LVLH PITCH (deg)
20	339
	343
	347
	351
	355
15	359
	3
	7
	11
	15
10	19
	23
	27
	31
	35
5	39

ENT-7a/E/K

(reduced copy)

FAB USE ONLY FS CC 8-18 ENT/125/FIN

TOP

HOOK VELCRO

HOOK VELCRO

DEORBIT BURN MONITOR

OMS TEMP*		
FU IN P	≥ L 230, R 230	OMS ENG FAIL
	≤ L 214, R 212	OMS PRPLT FAIL
or No FU IN P		
OMS PC* & OMS ↓ (BFS: √accel)		
ENG VLV 1 or 2 < 70		OMS ENG FAIL
or OX IN P > 227		
OX IN P ≤ 227 or No OX IN P		OMS PRPLT FAIL
OMS OX/FU TK P (√ENG IN P)		
OX/FU LOW		He PRESS/VAP ISOL (two) – OP If aff TK P not incr: He PRESS/VAP ISOL (two) – CL At PC < 72 or OMS TEMP: OMS PRPLT FAIL
OX & FU HIGH		He PRESS/VAP ISOL (two) – CL Cycle He A(B) to maintain TK P 234-284
OMS GMBL	PRI fail	L(R) OMS GMBL – SEC (twice)
	SEC fail	If high RCS usage: OMS ENG FAIL
GPC	**1(4) &** Burning OMS aff	aff GPC PWR – OFF If SEC GMBL avail: aff MDM FF 1(4) – OFF,ON L(R) OMS GMBL – SEC (twice)
	SEC GMBL lost	If high RCS usage: OMS ENG FAIL
	2 FAs lost	√MAN SHUTDN
I/O ERROR FA	**1(4)**	L(R) OMS GMBL – SEC
		♦I/O RESET (if recov: BFS I/O RESET) If high RCS usage: OMS ENG FAIL
	2 FAs lost	√MAN SHUTDN
BCE STRG D		I/O RESET (if recov: >>)
	1(4)	If high RCS usage: L(R) OMS GMBL – SEC (twice)
RM DLMA IMU **or** **GPC SET SPLIT** **or** **2 MN BUSES**	**ABOVE SAFE** HP ⇒ [ ][ ]	STOP BURN: OMS ENG(s) – OFF >>
	BELOW SAFE HP ⇒	IMU DLMA: After C/O: √timer G21 If any IMU ACC > 0.03: aff IMU – desel I'cnct OMS to RCS (√RCS Burn Time) THC +X to TGT HP (EOM) or 3.5 x timer at C/O (AOA) SET SPLIT: Go to "GPC" above
I/O ERROR PCM		OI PCMMU PWR – 2(1)

*If XFD, BLDN, or sensor fail, monitor ENG IN P for off-nominal performance

ENT-2a/125/A,O,D,E/B

(reduced copy)

TOP
BACK OF 'DEORBIT BURN MONITOR'

HOOK VELCRO

OMS FAILURES

HOOK VELCRO

LEFT OMS

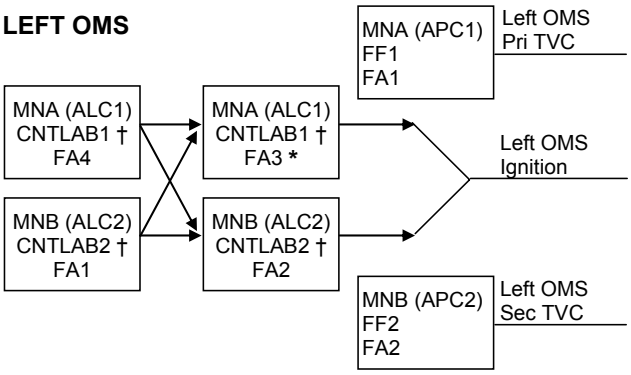

† If CNTL AB1 or AB2 (CA1 or CA2) failed and ign path still exists at OMS fail, assume L(R) OMS ↓ is PRPLT FAIL

* If L(R) P_C failed high during burn, or FA3(4) failed, at L(R) OMS fail, no guidance downmode after L(R) OMS ENG switch OFF (TGO slow, ADI needles in error, 6 ft/s underburn)

RIGHT OMS

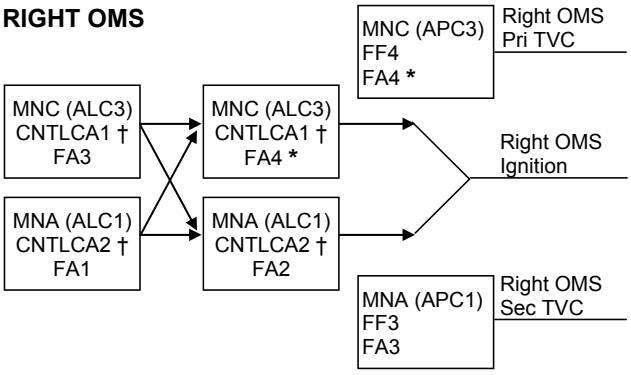

If two FA MDMs lost		
MDMs	Preburn: ENG – OFF	During burn: MAN SHUTDN
1,2	LEFT (TVC)	BOTH
1,3	RIGHT (IGN)	LEFT
1,4	LEFT (IGN)	RIGHT
2,3	LEFT (IGN)	RIGHT
2,4	RIGHT (IGN)	LEFT
3,4	RIGHT (TVC)	BOTH

ENT-2b/125/A,O,D,E/A

(reduced copy)

Space Shuttle Program
FLIGHT DATA FILE

JSC-48020-125
FINAL

ENTRY CHECKLIST

STS
125

Flight Cover (trim bottom to expose tabs)