Space Shuttle Program
FLIGHT DATA FILE

JSC-48024-119

EVA Checklist

STS-119 Flight Supplement

Mission Operations Directorate
EVA, Robotics, and Crew Systems Operations Division

Final, Rev A
January 23, 2009

NOTE
This supplement is to be integrated into the generic edition to provide a complete document for the specific flight. Some pages in the generic edition may be replaced with supplemental pages identified as 'TEMP'. These generic pages, if any, must be retained for use on future flights.

National Aeronautics and
Space Administration

Lyndon B. Johnson Space Center
Houston, Texas

Verify this is the correct version for the pending operation (training, simulation or flight).
Electronic copies of FDF books are available. URL: http://mod.jsc.nasa.gov/do3/FDF/index.html

MISSION OPERATIONS DIRECTORATE

EVA CHECKLIST
STS-119 FLIGHT SUPPLEMENT

FINAL, REVISION A
January 23, 2009

PREPARED BY:

Glenda S. Brown
Book Manager

APPROVED BY:

Tomas L. Gonzalez-Torres
Lead, EVA Systems Group

Dina E. Contella
Lead, EVA Task Group

Angela R. Prince
Chief, EVA Operations Branch

This document is under the configuration control of the Crew Procedures Control Board (CPCB). All proposed changes must be submitted via FDF Workflow Crew Procedure Change Request (CR) to DO3/FDF Manager.

Additional distribution of this book, for official use only, may be requested in writing to DO3/PMO Administrator. The request must include justification and requester's name, organization, position, and phone number. Contractor requests are made through the NASA or DOD organization supported. Deletions, reduction in quantity, or change of address may be submitted to DO3/FDF Management Office, 281-244-1184.

Incorporates the following:			
482#:	EVA FS-0215	EVA FS-0227	MULTI-1762
	EVA FS-0216	EVA FS-0228	
	EVA FS-0217	EVA FS-0229	
	EVA FS-0218	EVA FS-0230	
	EVA FS-0219	EVA FS-0231	
	EVA FS-0220	EVA FS-0232	
	EVA FS-0221	EVA FS-0233	
	EVA FS-0222	EVA FS-0234	
	EVA FS-0223	EVA FS-0235	
	EVA FS-0224	EVA FS-0236	
	EVA FS-0225	EVA FS-0237	
	EVA FS-0226		

AREAS OF TECHNICAL RESPONSIBILITY

Book Manager	DX3/G. Brown	281-244-0131

EVA CHECKLIST
STS-119 FLIGHT SUPPLEMENT

LIST OF EFFECTIVE PAGES

FINAL	12/19/08
REV A	01/23/09

Sign Off	*	119/FIN A
FS ii	*	119/FIN A
iii	*	generic
iv	*	generic
FS v	*	119/FIN A
FS vi	*	119/FIN A
FS vii	*	119/FIN A
FS viii	*	119/FIN A
FS ix	*	119/FIN A
FS x	*	119/FIN A
FS xi		119/FIN A
FS xii		119/FIN A
FS xiii		119/FIN A
FS xiv		119/FIN A
FS xv		119/FIN A
FS xvi		119/FIN A
FS xvii		119/FIN A
FS xviii		119/FIN A
1-1		generic
1-2		generic
1-3		generic
1-4		generic
1-5		generic
1-6		generic
1-7		generic
1-8		generic
1-9		generic
1-10		generic
TEMP FS 2-1		119/FIN A
TEMP FS 2-2		ALL/FIN A
2-3		generic
2-4		generic
TEMP FS 2-5		119/FIN A
TEMP FS 2-6		ALL/FIN A
FS 2-7		119/FIN A
FS 2-8		119/FIN A
FS 2-9		119/FIN A
FS 2-10		119/FIN A
FS 2-11		119/FIN A
FS 2-12		119/FIN A
FS 2-13		119/FIN A
FS 2-14		119/FIN A
FS 2-15		119/FIN A
FS 2-16		119/FIN A
FS 2-17		119/FIN A
FS 2-18		119/FIN A
3-1		generic
3-2		generic
3-3		generic
3-4		generic
3-5		generic
3-6		generic
3-7		generic
3-8		generic
3-9		generic
CC 3-10		generic
CC 3-11		generic
3-12		generic
4-1		generic
4-2		generic
4-3		generic
4-4		generic
4-5		generic
4-6		generic
4-7		generic
4-8		generic
4-9		generic
4-10		generic
4-11		generic
4-12		generic
5-1		generic
5-2		generic
5-3		generic
5-4		generic
A6-1		generic
CC A6-2		generic
6-3		generic
CC 6-4		generic
FS 7-1		119/FIN A
FS 7-2		119/FIN A
FS 7-3		119/FIN A
FS 7-4		119/FIN A
FS 7-5		119/FIN A
FS 7-6		119/FIN A
FS 7-7		119/FIN A
FS 7-8		119/FIN A
FS 7-9		119/FIN A
FS 7-10		119/FIN A
FS 7-11		119/FIN A
FS 7-12		119/FIN A
FS 7-13	⊗	119/FIN A
FS 7-14	⊗	119/FIN A
FS 7-15		119/FIN A
FS 7-16		119/FIN A
FS 7-17	⊗	119/FIN A
FS 7-18	⊗	119/FIN A

* – Omit from flight book
⊗ – Flight copies of this page contain color

FS 7-19 ..... 119/FIN A
FS 7-20 ..... 119/FIN A
FS 7-21 ..... 119/FIN A
FS 7-22 ..... 119/FIN A
FS 7-23 ..... 119/FIN A
FS 7-24 ..... ⊗ 119/FIN A
FS 7-25 ..... ⊗ 119/FIN A
FS 7-26 ..... 119/FIN A
FS 7-27 ..... 119/FIN A
FS 7-28 ..... ⊗ 119/FIN A
FS 7-29 ..... 119/FIN A
FS 7-30 ..... 119/FIN A
FS 7-31 ..... 119/FIN A
FS 7-32 ..... 119/FIN A
FS 7-33 ..... ⊗ 119/FIN A
FS 7-34 ..... 119/FIN A
FS 7-35 ..... ⊗ 119/FIN A
FS 7-36 ..... 119/FIN A
FS 7-37 ..... 119/FIN A
FS 7-38 ..... 119/FIN A
FS 7-39 ..... ⊗ 119/FIN A
FS 7-40 ..... ⊗ 119/FIN A
FS 7-41 ..... ⊗ 119/FIN A
FS 7-42 ..... 119/FIN A
FS 7-43 ..... 119/FIN A
FS 7-44 ..... 119/FIN A
FS 7-45 ..... ⊗ 119/FIN A
FS 7-46 ..... 119/FIN A
FS 7-47 ..... ⊗ 119/FIN A
FS 7-48 ..... 119/FIN A
FS 7-49 ..... 119/FIN A
FS 7-50 ..... 119/FIN A
FS 7-51 ..... Δ 119/FIN A
FS 7-52 ..... Δ 119/FIN A
FS 7-53 ..... 119/FIN A
FS 7-54 ..... 119/FIN A
FS 7-55 ..... 119/FIN A
FS 7-56 ..... 119/FIN A
FS 7-57 ..... 119/FIN A
FS 7-58 ..... 119/FIN A
FS 7-59 ..... 119/FIN A
FS 7-60 ..... 119/FIN A
FS 7-61 ..... 119/FIN A
FS 7-62 ..... ⊗ 119/FIN A
FS 7-63 ..... ⊗ 119/FIN A
FS 7-64 ..... 119/FIN A
FS 7-65 ..... ⊗ 119/FIN A
FS 7-66 ..... 119/FIN A
FS 7-67 ..... ⊗ 119/FIN A
FS 7-68 ..... ⊗ 119/FIN A
FS 7-69 ..... 119/FIN A
FS 7-70 ..... ⊗ 119/FIN A
FS 7-71 ..... 119/FIN A
FS 7-72 ..... 119/FIN A
FS 7-73 ..... ⊗ 119/FIN A
FS 7-74 ..... 119/FIN A
FS 7-75 ..... 119/FIN A
FS 7-76 ..... ⊗ 119/FIN A
FS 7-77 ..... 119/FIN A
FS 7-78 ..... ⊗ 119/FIN A
FS 7-79 ..... 119/FIN A
FS 7-80 ..... 119/FIN A
FS 7-81 ..... 119/FIN A
FS 7-82 ..... ⊗ 119/FIN A
FS 7-83 ..... ⊗ 119/FIN A
FS 7-84 ..... 119/FIN A
FS 7-85 ..... 119/FIN A
FS 7-86 ..... 119/FIN A
FS 7-87 ..... Δ 119/FIN A
FS 7-88 ..... Δ 119/FIN A
FS 7-89 ..... ⊗ 119/FIN A
FS 7-90 ..... 119/FIN A
FS 7-91 ..... 119/FIN A
FS 7-92 ..... 119/FIN A
FS 7-93 ..... 119/FIN A
FS 7-94 ..... 119/FIN A
FS 7-95 ..... 119/FIN A
FS 7-96 ..... 119/FIN A
FS 7-97 ..... 119/FIN A
FS 7-98 ..... ⊗ 119/FIN A
FS 7-99 ..... ⊗ 119/FIN A
FS 7-100 ..... 119/FIN A
FS 7-101 ..... 119/FIN A
FS 7-102 ..... 119/FIN A
FS 7-103 ..... 119/FIN A
FS 7-104 ..... 119/FIN A
FS 7-105 ..... 119/FIN A
FS 7-106 ..... ⊗ 119/FIN A
FS 7-107 ..... ⊗ 119/FIN A
FS 7-108 ..... 119/FIN A
FS 7-109 ..... 119/FIN A
FS 7-110 ..... ⊗ 119/FIN A
FS 7-111 ..... ⊗ 119/FIN A
FS 7-112 ..... ⊗ 119/FIN A
FS 7-113 ..... 119/FIN A
FS 7-114 ..... ⊗ 119/FIN A
FS 7-115 ..... ⊗ 119/FIN A
FS 7-116 ..... 119/FIN A
FS 7-117 ..... ⊗ 119/FIN A
FS 7-118 ..... ⊗ 119/FIN A
FS 7-119 ..... ⊗ 119/FIN A
FS 7-120 ..... ⊗ 119/FIN A
FS 7-121 ..... 119/FIN A
FS 7-122 ..... 119/FIN A
FS 7-123 ..... ⊗ 119/FIN A
FS 7-124 ..... 119/FIN A
FS 7-125 ..... ⊗ 119/FIN A
FS 7-126 ..... ⊗ 119/FIN A
FS 7-127 ..... ⊗ 119/FIN A
FS 7-128 ..... ⊗ 119/FIN A
FS 7-129 ..... ⊗ 119/FIN A
FS 7-130 ..... ⊗ 119/FIN A

⊗ – Flight copies of this page contain color

Δ – Tear-out page

FS 7-131 ..... ⊗ 119/FIN A
FS 7-132 ..... ⊗ 119/FIN A
FS 7-133 ..... 119/FIN A
FS 7-134 ..... ⊗ 119/FIN A
FS 7-135 ..... ⊗ 119/FIN A
FS 7-136 ..... 119/FIN A
FS 7-137 ..... 119/FIN A
FS 7-138 ..... 119/FIN A
FS 7-139 ..... Δ 119/FIN A
FS 7-140 ..... Δ 119/FIN A
FS 7-141 ..... 119/FIN A
FS 7-142 ..... 119/FIN A
FS 7-143 ..... 119/FIN A
FS 7-144 ..... 119/FIN A
FS 7-145 ..... 119/FIN A
FS 7-146 ..... 119/FIN A
FS 7-147 ..... 119/FIN A
FS 7-148 ..... 119/FIN A
FS 7-149 ..... 119/FIN A
FS 7-150 ..... ⊗ 119/FIN A
FS 7-151 ..... ⊗ 119/FIN A
FS 7-152 ..... 119/FIN A
FS 7-153 ..... 119/FIN A
FS 7-154 ..... ⊗ 119/FIN A
FS 7-155 ..... 119/FIN A
FS 7-156 ..... ⊗ 119/FIN A
FS 7-157 ..... ⊗ 119/FIN A
FS 7-158 ..... ⊗ 119/FIN A
FS 7-159 ..... 119/FIN A
FS 7-160 ..... 119/FIN A
FS 7-161 ..... 119/FIN A
FS 7-162 ..... ⊗ 119/FIN A
FS 7-163 ..... 119/FIN A
FS 7-164 ..... 119/FIN A
FS 7-165 ..... ⊗ 119/FIN A
FS 7-166 ..... 119/FIN A
FS 7-167 ..... 119/FIN A
FS 7-168 ..... 119/FIN A
FS 7-169 ..... ⊗ 119/FIN A
FS 7-170 ..... 119/FIN A
FS 7-171 ..... 119/FIN A
FS 7-172 ..... ⊗ 119/FIN A
FS 7-173 ..... ⊗ 119/FIN A
FS 7-174 ..... 119/FIN A
FS 7-175 ..... 119/FIN A
FS 7-176 ..... 119/FIN A
FS 7-177 ..... Δ 119/FIN A
FS 7-178 ..... Δ 119/FIN A
FS 7-179 ..... 119/FIN A
FS 7-180 ..... ⊗ 119/FIN A
FS 7-181 ..... 119/FIN A
FS 7-182 ..... 119/FIN A
FS 7-183 ..... ⊗ 119/FIN A
FS 7-184 ..... ⊗ 119/FIN A
FS 7-185 ..... ⊗ 119/FIN A
FS 7-186 ..... ⊗ 119/FIN A
FS 7-187 ..... ⊗ 119/FIN A
FS 7-188 ..... ⊗ 119/FIN A
TEMP FS 8-1 ..... 119/FIN A
TEMP FS 8-2 ..... 119/FIN A
TEMP FS 8-2a ..... 119/FIN A
TEMP FS 8-2b ..... 119/FIN A
8-3 ..... generic
8-4 ..... generic
8-5 ..... generic
8-6 ..... generic
8-7 ..... generic
8-8 ..... generic
FS 8-9 ..... 119/FIN A
FS 8-10 ..... ⊗ 119/FIN A
FS 8-11 ..... 119/FIN A
FS 8-12 ..... 119/FIN A
FS 8-13 ..... 119/FIN A
FS 8-14 ..... 119/FIN A
FS 8-15 ..... ⊗ 119/FIN A
FS 8-16 ..... ⊗ 119/FIN A
FS 8-17 ..... ⊗ 119/FIN A
FS 8-18 ..... 119/FIN A
9-1 ..... generic
9-2 ..... generic
9-3 ..... generic
9-4 ..... generic
9-5 ..... generic
9-6 ..... generic
TEMP FS 10-1 ..... 119/FIN A
TEMP FS 10-2 ..... ALL/FIN A
10-3 ..... generic
10-4 ..... generic
10-4a ..... generic
10-4b ..... generic
10-5 ..... generic
10-6 ..... generic
10-7 ..... generic
10-8 ..... generic
10-9 ..... generic
10-10 ..... generic
10-11 ..... generic
10-12 ..... generic
10-13 ..... generic
10-14 ..... generic
FS CC 10-15 ..... 119/FIN A
FS CC 10-16 ..... ⊗ 119/FIN A
11-1 ..... generic
11-2 ..... generic
11-3 ..... generic
11-4 ..... generic
12-i ..... generic
12-ii ..... generic
TEMP FS 12-1 ..... 119/FIN A
TEMP FS 12-2 ..... ALL/FIN A
12-3 ..... generic
12-4 ..... generic

⊗ – Flight copies of this page contain color
Δ – Tear-out page

12-5 ..... generic
12-6 ..... generic
12-7 ..... generic
12-8 ..... generic
12-9 ..... generic
12-10 ..... generic
12-11 ..... generic
12-12 ..... generic
12-13 ..... generic
12-14 ..... generic
12-15 ..... generic
12-16 ..... generic
12-17 ..... generic
12-18 ..... generic
12-19 ..... generic
12-20 ..... generic
12-21 ..... generic
12-22 ..... generic
12-23 ..... generic
12-24 ..... generic
12-25 ..... generic
12-26 ..... generic
FS CC 12-27 ..... ⊗ 119/FIN A
FS CC 12-28 ..... 119/FIN A
FS 12-29 ..... ⊗ 119/FIN A
FS 12-30 ..... ⊗ 119/FIN A
FS 12-31 ..... ⊗ 119/FIN A
FS 12-32 ..... 119/FIN A
FS 13-1 ..... 119/FIN A
FS 13-2 ..... 119/FIN A
14-1 ..... generic
14-2 ..... generic
14-3 ..... generic
14-4 ..... generic
14-5 ..... generic
14-6 ..... generic
14-7 ..... generic
14-8 ..... generic
14-9 ..... generic
14-10 ..... generic
14-11 ..... generic
14-12 ..... generic
14-13 ..... generic
14-14 ..... generic
14-15 ..... generic
14-16 ..... generic
14-17 ..... generic
14-18 ..... generic
14-19 ..... generic
14-20 ..... generic
14-21 ..... generic
14-22 ..... generic
15-1 ..... generic
15-2 ..... generic
15-3 ..... generic
15-4 ..... generic
15-5 ..... generic
15-6 ..... generic
15-7 ..... generic
15-8 ..... generic
15-9 ..... generic
15-10 ..... generic
15-11 ..... generic
15-12 ..... generic
15-13 ..... generic
15-14 ..... generic
16-i ..... generic
16-ii ..... generic
TEMP FS 16-1 ..... 119/FIN A
TEMP FS 16-2 ..... 119/FIN A
FS 16-3 ..... 119/FIN A
FS 16-4 ..... 119/FIN A
FS 16-5 ..... 119/FIN A
FS 16-6 ..... 119/FIN A
FS 16-7 ..... 119/FIN A
FS 16-8 ..... ⊗ 119/FIN A
FS 16-9 ..... ⊗ 119/FIN A
FS 16-10 ..... 119/FIN A
FS 16-11 ..... 119/FIN A
FS 16-12 ..... 119/FIN A
FS 16-13 ..... 119/FIN A
FS 16-14 ..... 119/FIN A
FS 16-15 ..... 119/FIN A
FS 16-16 ..... 119/FIN A
FS 16-17 ..... 119/FIN A
FS 16-18 ..... 119/FIN A
FS 16-19 ..... 119/FIN A
FS 16-20 ..... 119/FIN A
FS 16-21 ..... 119/FIN A
FS 16-22 ..... 119/FIN A
FS 16-23 ..... 119/FIN A
FS 16-24 ..... 119/FIN A
FS 16-25 ..... ⊗ 119/FIN A
FS 16-26 ..... ⊗ 119/FIN A
FS 16-27 ..... ⊗ 119/FIN A
FS 16-28 ..... ⊗ 119/FIN A
FS 16-29 ..... ⊗ 119/FIN A
FS 16-30 ..... ⊗ 119/FIN A
FS 16-31 ..... ⊗ 119/FIN A
FS 16-32 ..... ⊗ 119/FIN A
FS 16-33 ..... ⊗ 119/FIN A
FS 16-34 ..... ⊗ 119/FIN A
FS 16-35 ..... ⊗ 119/FIN A
FS 16-36 ..... ⊗ 119/FIN A
FS 16-37 ..... ⊗ 119/FIN A
FS 16-38 ..... ⊗ 119/FIN A
FS 16-39 ..... ⊗ 119/FIN A
FS 16-40 ..... ⊗ 119/FIN A
FS 16-41 ..... ⊗ 119/FIN A
FS 16-42 ..... 119/FIN A
FS 16-43 ..... ⊗ 119/FIN A
FS 16-44 ..... ⊗ 119/FIN A

⊗ – Flight copies of this page contain color

FS 16-45 ..... ⊗ 119/FIN A
FS 16-46 ..... ⊗ 119/FIN A
FS 16-47 ..... ⊗ 119/FIN A
FS 16-48 ..... ⊗ 119/FIN A
FS 16-49 ..... ⊗ 119/FIN A
FS 16-50 ..... ⊗ 119/FIN A
FS 16-51 ..... ⊗ 119/FIN A
FS 16-52 ..... ⊗ 119/FIN A
FS 16-53 ..... 119/FIN A
FS 16-54 ..... 119/FIN A
FS 16-55 ..... 119/FIN A
FS 16-56 ..... ⊗ 119/FIN A
FS 16-57 ..... ⊗ 119/FIN A
FS 16-58 ..... ⊗ 119/FIN A
FS 16-59 ..... ⊗ 119/FIN A
FS 16-60 ..... ⊗ 119/FIN A
FS 16-61 ..... ⊗ 119/FIN A
FS 16-62 ..... 119/FIN A
FS 16-63 ..... 119/FIN A
FS 16-64 ..... 119/FIN A
FS 16-65 ..... ⊗ 119/FIN A
FS 16-66 ..... ⊗ 119/FIN A
FS 16-67 ..... ⊗ 119/FIN A
FS 16-68 ..... 119/FIN A
FS 16-69 ..... 119/FIN A
FS 16-70 ..... 119/FIN A
FS 16-71 ..... 119/FIN A
FS 16-72 ..... ⊗ 119/FIN A
FS 16-73 ..... ⊗ 119/FIN A
FS 16-74 ..... 119/FIN A
FS 16-75 ..... ⊗ 119/FIN A
FS 16-76 ..... ⊗ 119/FIN A
FS 16-77 ..... ⊗ 119/FIN A
FS 16-78 ..... 119/FIN A
FS 16-79 ..... ⊗ 119/FIN A
FS 16-80 ..... ⊗ 119/FIN A
FS 16-81 ..... ⊗ 119/FIN A
FS 16-82 ..... ⊗ 119/FIN A
FS 16-83 ..... ⊗ 119/FIN A
FS 16-84 ..... ⊗ 119/FIN A
FS 16-85 ..... ⊗ 119/FIN A
FS 16-86 ..... ⊗ 119/FIN A
FS 16-87 ..... ⊗ 119/FIN A
FS 16-88 ..... ⊗ 119/FIN A
FS 16-89 ..... ⊗ 119/FIN A
FS 16-90 ..... 119/FIN A
FS 16-91 ..... 119/FIN A
FS 16-92 ..... 119/FIN A
FS 16-93 ..... ⊗ 119/FIN A
FS 16-94 ..... 119/FIN A
FS 16-95 ..... 119/FIN A
FS 16-96 ..... 119/FIN A
FS 16-97 ..... ⊗ 119/FIN A
FS 16-98 ..... ⊗ 119/FIN A
FS 16-99 ..... 119/FIN A
FS 16-100 ..... 119/FIN A
FS 16-101 ..... 119/FIN A
FS 16-102 ..... ⊗ 119/FIN A
FS 16-103 ..... ⊗ 119/FIN A
FS 16-104 ..... ⊗ 119/FIN A
FS 16-105 ..... ⊗ 119/FIN A
FS 16-106 ..... ⊗ 119/FIN A
FS 16-107 ..... 119/FIN A
FS 16-108 ..... ⊗ 119/FIN A
FS 16-109 ..... 119/FIN A
FS 16-110 ..... 119/FIN A
FS 16-111 ..... ⊗ 119/FIN A
FS 16-112 ..... ⊗ 119/FIN A
FS 16-113 ..... ⊗ 119/FIN A
FS 16-114 ..... ⊗ 119/FIN A
FS 16-115 ..... ⊗ 119/FIN A
FS 16-116 ..... 119/FIN A
FS 16-117 ..... ⊗ 119/FIN A
FS 16-118 ..... ⊗ 119/FIN A
FS 16-119 ..... 119/FIN A
FS 16-120 ..... 119/FIN A
FS 16-121 ..... ⊗ 119/FIN A
FS 16-122 ..... ⊗ 119/FIN A
FS 16-123 ..... ⊗ 119/FIN A
FS 16-124 ..... 119/FIN A
FS 16-125 ..... ⊗ 119/FIN A
FS 16-126 ..... ⊗ 119/FIN A
FS 16-127 ..... ⊗ 119/FIN A
FS 16-128 ..... ⊗ 119/FIN A
FS 16-129 ..... 119/FIN A
FS 16-130 ..... ⊗ 119/FIN A
FS 16-131 ..... ⊗ 119/FIN A
FS 16-132 ..... ⊗ 119/FIN A
FS 16-133 ..... 119/FIN A
FS 16-134 ..... 119/FIN A
FS 16-135 ..... 119/FIN A
FS 16-136 ..... 119/FIN A
FS 16-137 ..... ⊗ 119/FIN A
FS 16-138 ..... ⊗ 119/FIN A
FS 16-139 ..... 119/FIN A
FS 16-140 ..... 119/FIN A
FS 16-141 ..... 119/FIN A
FS 16-142 ..... 119/FIN A
FS 16-143 ..... 119/FIN A
FS 16-144 ..... 119/FIN A
FS 16-145 ..... 119/FIN A
FS 16-146 ..... 119/FIN A
FS 16-147 ..... 119/FIN A
FS 16-148 ..... 119/FIN A
17-1 ..... * generic
17-2 ..... * generic
FS 18-1 ..... 119/FIN A
FS 18-2 ..... 119/FIN A
FS 18-3 ..... 119/FIN A
FS 18-4 ..... 119/FIN A
FS 18-5 ..... 119/FIN A
FS 18-6 ..... 119/FIN A

⊗ – Flight copies of this page contain color

***** – Omit from flight book

FS 18-7	119/FIN A	FS 18-39 ⊗	119/FIN A
FS 18-8	119/FIN A	FS 18-40 ⊗	119/FIN A
FS 18-9	119/FIN A	FS 18-41 ⊗	119/FIN A
FS 18-10	119/FIN A	FS 18-42 ⊗	119/FIN A
FS 18-11	119/FIN A	FS 18-43 ⊗	119/FIN A
FS 18-12	119/FIN A	FS 18-44 ⊗	119/FIN A
FS 18-13 ⊗	119/FIN A	FS 18-45 ⊗	119/FIN A
FS 18-14	119/FIN A	FS 18-46 ⊗	119/FIN A
FS 18-15 ⊗	119/FIN A	FS 18-47 ⊗	119/FIN A
FS 18-16	119/FIN A	FS 18-48 ⊗	119/FIN A
FS 18-17	119/FIN A	FS 18-49	119/FIN A
FS 18-18	119/FIN A	FS 18-50 ⊗	119/FIN A
FS 18-19	119/FIN A	FS 18-51 ⊗	119/FIN A
FS 18-20	119/FIN A	FS 18-52 ⊗	119/FIN A
FS 18-21	119/FIN A	19-i	generic
FS 18-22	119/FIN A	19-ii	generic
FS 18-23 ⊗	119/FIN A	19-1	generic
FS 18-24	119/FIN A	19-2	generic
FS 18-25	119/FIN A	19-3	generic
FS 18-26	119/FIN A	19-4	generic
FS 18-27	119/FIN A	19-5	generic
FS 18-28 ⊗	119/FIN A	19-6	generic
FS 18-29 ⊗	119/FIN A	19-7	generic
FS 18-30 ⊗	119/FIN A	19-8	generic
FS 18-31 ⊗	119/FIN A	19-9	generic
FS 18-32 ⊗	119/FIN A	19-10	generic
FS 18-33 ⊗	119/FIN A	19-11	generic
FS 18-34 ⊗	119/FIN A	19-12	generic
FS 18-35 ⊗	119/FIN A	19-13	generic
FS 18-36 ⊗	119/FIN A	19-14	generic
FS 18-37	119/FIN A	20-1 *	generic
FS 18-38 ⊗	119/FIN A	20-2 *	generic

EVA CUE CARDS

Title	Ref. Page	Card No.
SAFER CHECKOUT RESULTS (Front)	CC 3-10	generic
SAFER STATUS TROUBLESHOOTING (Back)	CC 3-11	generic
DEPRESS/REPRESS (NOM A/L) (Front)	CC A6-2	generic
FAILED LEAK CHECK (Back of DEPRESS/REPRESS)	CC 6-4	generic
CONSUMABLES TRACKING CUE CARD (Front)	FS CC 10-15	EVA-6a/119/O/B
BATTERY RECHARGE/METOX REGEN CUE CARD (Back)	FS CC 10-16	EVA-6b/119/O/B
EMERGENCY UNDOCKING EVA TRANSFER (Front)	FS CC 12-27	EVA-5a/119/O/A
EXPEDITED SUIT DOFFING CUE CARD (Back)	FS CC 12-28	EVA-5b/119/O/A

⊗ – Flight copies of this page contain color

* – Omit from flight book

CONTENTS PAGE

10.2 PSI CABIN 1-1
MASK PREBREATHE INITIATE 1-2
PREP FOR 10.2 PSI CABIN 1-3
CABIN DEPRESS TO 10.2 PSI 1-4
10.2 PSIA DEPRESS CHART 1-5
10.2 PSI CABIN CONFIG 1-6
MASK PREBREATHE TERMINATE 1-6
10.2 PSI MAINTENANCE 1-7
CABIN REPRESS TO 14.7 PSI 1-8
14.7 PSI CABIN CONFIG 1-9

AIRLOCK CONFIG ..... TEMP FS 2-1
AIRLOCK PREP ..... TEMP FS 2-2
EMU SWAP 2-3
BOOSTER FAN DEACTIVATION/REMOVAL 2-4
BOOSTER FAN INSTALLATION/ACTIVATION 2-4
EMU REMOVAL 2-4
EMU INSTALLATION 2-4
EMU CHECKOUT PREP ..... TEMP FS 2-5
LTA RESTRAINT STRAP REMOVAL ..... TEMP FS 2-6
LTA RESTRAINT STRAP INSTALLATION ..... TEMP FS 2-6
EVA PREP FOR TRANSFER TO ISS ..... FS 2-7
POST-DOCKING EVA TRANSFER AND RECONFIG ..... FS 2-9
EMU RESIZE ..... FS 2-10
EMU SWAP FOR EVA 2 ..... FS 2-11
EMU SWAP FOR EVA 3 ..... FS 2-12
EMU SWAP FOR EVA 4 ..... FS 2-13
POST EVA EMU RECONFIG AND TRANSFER ..... FS 2-14
EVA UNPACK AND STOW ..... FS 2-17

CHECKOUTS 3-1
EMU CHECKOUT 3-2
EMU POWERUP AND COMM CHECK 3-2
PRIMARY REGULATOR/FAN/PUMP CHECK 3-4
SOP CHECK 3-5
BATTERY CHARGE CHECK INIT 3-6
BATTERY CHARGE CHECK TERM 3-6
EMU SWAP DURING CHECKOUT 3-7
POST EMU C/O RECONFIG 3-7
SAFER CHECKOUT 3-8
SELF TEST SEQUENCE 3-9
SAFER CHECKOUT RESULTS ..... CC 3-10
SAFER STATUS TROUBLESHOOTING ..... CC 3-11
REBA POWERED HARDWARE CHECKOUT 3-12

EVA PREP 4-1
MIDDECK PREP 4-2
EVA PREP 4-3
PREP FOR DONNING 4-3
EMU DONNING 4-5
EMU CHECK 4-7
EMU PURGE 4-7
EMU PREBREATHE 4-8
SAFER DONNING 4-8
EVA COMM CONFIG 4-10
EVA COMM DECONFIG 4-10
APPROVED NON-EMU HARDWARE MATRIX 4-11

EMU STATUS 5-1
EMU STATUS 5-2

DEPRESS/REPRESS A6-1
DEPRESS/REPRESS (NOM A/L) ..... CC A6-2
FAILED LEAK CHECK 6-3
FAILED LEAK CHECK (5 PSI) ..... CC 6-4
FAILED LEAK CHECK (14.7/10.2 PSI) ..... CC 6-4

TIMELINES ..... FS 7-1
119 (15A) EVA OV BASELINE ..... FS 7-3
EVA 1
EVA 1 SUMMARY TIMELINE ..... FS 7-5
EVA 1 INHIBIT PAD ..... FS 7-6
EVA 1 NOTES, CAUTIONS, AND WARNINGS ..... FS 7-8
EVA 1 TOOL CONFIG ..... FS 7-13
EVA 1 A/L EGRESS AND SETUP ..... FS 7-15
EVA 1 ATTACH S6 TO S5 ..... FS 7-18
EVA 1 CONNECT S5 TO S6 UMBILICALS ..... FS 7-26
EVA 1 RELEASE SABB RESTRAINTS ..... FS 7-30
EVA 1 PVR RADIATOR CINCHES AND WINCH RELEASE ..... FS 7-34
EVA 1 ROTATE IEA KEEL PIN AND RELEASE SAW BETA GIMBAL RESTRAINTS ..... FS 7-36
EVA 1 UNSTOW SABB, RELEASE MAST, AND REMOVE ECU/SSU SHROUD ..... FS 7-42
EVA 1 S6 MMOD SHIELD BOLT TORQUE RELEASE (GET-AHEAD) ..... FS 7-46
EVA 1 CLEANUP ..... FS 7-48
EVA 1 A/L INGRESS ..... FS 7-49
EVA 2
EVA 2 SUMMARY TIMELINE ..... FS 7-53
EVA 2 INHIBIT PAD ..... FS 7-54
EVA 2 NOTES, CAUTIONS, AND WARNINGS ..... FS 7-57
EVA 2 TOOL CONFIG ..... FS 7-62
EVA 2 A/L EGRESS AND SETUP ..... FS 7-64
EVA 2 BATTERY PREP ..... FS 7-67
EVA 2 P3 NADIR UCCAS DEPLOY ..... FS 7-69
EVA 2 P1 RBVM MLI REPAIR, P1/P3 FLUID JUMPER INSTALL, AND FHRC P-CLAMP RELEASE ..... FS 7-73
EVA 2 S3 OUTBOARD ZENITH PAS DEPLOY ..... FS 7-77
EVA 2 TOOL STANCHION RELOCATE/APFR RETRIEVE ..... FS 7-85
EVA 2 CLEANUP/INGRESS ..... FS 7-86
EVA 3
EVA 3 SUMMARY TIMELINE ..... FS 7-89
EVA 3 INHIBIT PAD ..... FS 7-91
EVA 3 NOTES, CAUTIONS, AND WARNINGS ..... FS 7-93
EVA 3 TOOL CONFIG ..... FS 7-98
EVA 3 EGRESS ..... FS 7-100
EVA 3 SETUP ..... FS 7-102
EVA 3 CETA CART RELOCATION ..... FS 7-103
EVA 3 SPDM COVERS ..... FS 7-108
EVA 3 LEE B REPAIR ..... FS 7-113
EVA 3 S1/S3 SSAS PANEL BBC RECONFIG ..... FS 7-122
EVA 3 S1/S3 FLUID QD JUMPER INSTALL ..... FS 7-123
EVA 3 S1 FHRC P-CLAMP RELEASE ..... FS 7-124
EVA 3 S0 1A_D RPCM REMOVE/REPLACE ..... FS 7-126
EVA 3 P1 1A_A RPCM REMOVE/REPLACE ..... FS 7-131
EVA 3 CLEANUP ..... FS 7-136
EVA 3 A/L INGRESS ..... FS 7-137

EVA 4
EVA 4 SUMMARY TIMELINE ..... FS 7-141
EVA 4 INHIBIT PAD ..... FS 7-142
EVA 4 NOTES, CAUTIONS, AND WARNINGS ..... FS 7-145
EVA 4 TOOL CONFIG ..... FS 7-150
EVA 4 A/L EGRESS ..... FS 7-152
EVA 4 S1/P1 RADIATOR IMAGING ..... FS 7-154
EVA 4 JLP GPS ANTENNA INSTALL ..... FS 7-156
EVA 4 Z1 PATCH PANEL ..... FS 7-158
EVA 4 S3 TASK SETUP ..... FS 7-159
EVA 4 CP1 WETA INSTALL ..... FS 7-160
EVA 4 S3 OUTBOARD NADIR PAS DEPLOY ..... FS 7-164
EVA 4 S3 INBOARD ZENITH PAS DEPLOY ..... FS 7-168
EVA 4 CLEANUP/INGRESS ..... FS 7-175
GET-AHEADS
S3 INBOARD NADIR PAS DEPLOY ..... FS 7-179
CONNECTOR INSULATING SLEEVE – CHANNEL 1/4 (S0) ..... FS 7-183
CONNECTOR INSULATING SLEEVE – MBS ..... FS 7-184
CONNECTOR INSULATING SLEEVE – SSPTS (NODE 1 FWD) ..... FS 7-185
CONNECTOR INSULATING SLEEVE – SSPTS (LAB FWD) ..... FS 7-186
CONNECTOR INSULATING SLEEVE – SSPTS (PMA2 PORT) ..... FS 7-187
CONNECTOR INSULATING SLEEVE – SSPTS (PMA2 STBD) ..... FS 7-188

TOOLS AND STOWAGE ..... TEMP FS 8-1
HW TOOL STOWAGE ASSEMBLY (TSA) ..... TEMP FS 8-2
PGT CHECKOUT 8-3
PGSC-PGT CONNECTION (A31P AND 760XD) 8-4
PROGRAM PGT SETTINGS 8-5
DOWNLOAD/ERASE EVENT LOG 8-5
PGT CONTINGENCIES 8-6
PGT STANDARD SETTINGS 8-7
TOOLBOX STOWAGE – STS-119/15A ..... FS 8-9
APFR MANAGEMENT – STS-119/15A ..... FS 8-10
SAFETY TETHERS – STS-119 (15A) ..... FS 8-11
TOOLBOX PANEL AND SLOT LABELS ..... FS 8-12
Z1 TOOLBOX INTERNAL LAYOUT ..... FS 8-13
AIRLOCK TOOLBOX INTERNAL LAYOUT ..... FS 8-14
APFR THERMAL SHIELD REMOVAL ..... FS 8-15
GREASE GUN NOZZLE MLI MODIFICATION ..... FS 8-16

POST EVA 9-1
POST EVA 9-2
SUIT DOFFING 9-2
SAFER DOFFING 9-2
EMU WATER RECHARGE 9-3
SAFER STOW 9-3
SUIT DRYING/SEAL WIPE 9-4
OXYGEN RECHARGE VERIFICATION 9-4
WATER FILL VERIFICATION 9-4
EMU POWERDOWN/OVERNIGHT STOW 9-5

EMU MAINT/RECHARGE ..... TEMP FS 10-1
WATER RECHARGE ..... TEMP FS 10-2
EMU POWERUP ..... TEMP FS 10-2
WATER FILL ..... TEMP FS 10-2
WATER FILL VERIFICATION ..... TEMP FS 10-2
EMU LiOH CHANGEOUT 10-4

MIDDECK EMU BATTERY RECHARGE (STAND-ALONE) 10-4a
MIDDECK EMU BATTERY RECHARGE/LiOH REPLACEMENT 10-5
INITIATE 10-5
TERMINATE 10-6
IN-SUIT EMU BATTERY RECHARGE/CHARGE VERIFICATION 10-7
INITIATE 10-7
TERMINATE 10-7
EMU POWERDOWN 10-7
HELMET LIGHT/PGT BATTERY RECHARGE 10-8
INITIATE 10-8
TERMINATE 10-9
REBA BATTERY INSTALLATION 10-9
EMU BATTERY REMOVAL/INSTALL 10-10
HELMET LIGHT BULB CHANGEOUT 10-11
REBA BATTERY RECHARGE 10-12
INITIATE 10-12
TERMINATE 10-13
CONSUMABLES TRACKING CUE CARD ..... FS CC 10-15
BATTERY RECHARGE/METOX REGEN CUE CARD ..... FS CC 10-16

POST EVA ENTRY PREP 11-1
POST EVA ENTRY PREP 11-2
SAFER ENTRY STOW 11-2
POST ISS EVA ENTRY PREP 11-3

OFF-NOMINAL PROCEDURES 12-i
EMU CONTINGENCY PROCS ..... TEMP FS 12-1
DISPLAY LOSS DURING POWER TRANSFER
(WARM RESTART) ..... TEMP FS 12-2
VACUUM H2O RECHARGE (MANNED) ..... TEMP FS 12-2
LiOH REPLACEMENT (MANNED) 12-3
BATTERY REPLACEMENT (MANNED) 12-4
WATER DUMP 12-6
SCU SWAP (UNMANNED) 12-7
SCU SWAP (MANNED) 12-7
EMU COLD RESTART (MANNED) 12-7
12.1 STS EVA DECONTAMINATION 12-8
CONTAMINATION TEST 12-15
SAFER BATTERY CHANGEOUT 12-18
BENDS TREATMENT ADAPTER (BTA) INSTALLATION (IN-SUIT) 12-19
BTA PREP 12-19
BTA TREATMENT 12-19
BENDS TREATMENT ADAPTER (BTA) INSTALLATION
(POST SUIT DOFFING) 12-21
BTA PREP 12-21
BTA TREATMENT 12-21
EMU RESIZE 12-24
EMERGENCY UNDOCKING EVA TRANSFER ..... FS CC 12-27
EXPEDITED SUIT DOFFING CUE CARD ..... FS CC 12-28
STS-119 NOMINAL EMU SIZING ..... FS 12-29
EMU CONTINGENCY RESIZE MATRIX (STS-119/15A) ..... FS 12-32

TPS REPAIR ..... FS 13-1

ORBITER CONTINGENCY EVA 14-1
PAYLOAD BAY EVA NOMENCLATURE 14-2
RMS/PRLA CONTINGENCY EVA 14-3
96 BOLT PRE-EVA TOOL CONFIG 14-13
96 BOLT EVA TIMELINE 14-14
CAPTURE LATCH MANUAL RELEASE (ODS/PMA) 14-19
96 BOLT EVA LAYOUT 14-21
PLBD LATCH TOOL PLACEMENT WITH DUAL LATCH GANG FAILURES 14-22

EVA CUFF CHECKLIST (CIL) 15-1
NORMAL EVA STATUS 15-2
DCM CONFIGURATION 15-2
EMU MALFUNCTION INDEX 15-2
DECOMPRESSION SICKNESS (DCS) 15-3
DECOMPRESSION SICKNESS (DCS) (CONT) 15-3
ABORT EVA 15-3
TERMINATE EVA 15-3
SUIT P EMERG 15-4
SOP O2 ON 15-4
BATT AMPS HIGH 15-4
BATT V DECAY OR BATT VDC LOW 15-4
SUIT P LOW 15-5
SUIT P HIGH 15-5
SOP P LOW 15-5
O2 USE HIGH 15-5
SUBLM PRESS 15-6
H2O GP LOW 15-6
RESRV H2O ON 15-6
H2O WP HIGH 15-6
NO VENT FLOW 15-7
CO2 HIGH OR MONITOR CO2 15-7
CO2 SNSR BAD 15-7
COMM FAILURE 15-7
AIR FLOW CONTAMINATION 15-8
LOSS OF COOLING 15-8
RLF V FAIL 15-8
MISC MSGS 1 15-8
MISC MSGS (CONT)/TIME LF 15-9
AIRLOCK LATCH DISCONNECT 15-9
AIRLOCK INGRESS 15-9

FOLLOWING PAGES NOT IN EV CUFF

RADIATOR ACTUATOR DISCONNECT 15-9
PLBD DRIVE CUT 15-10
DOOR DRIVE RESTRAINT 15-10
DOOR DRIVE DISCONNECT 15-10
WINCH OPERATIONS 15-10
WINCH OPERATIONS (CONT) 15-11
3-PT TOOL INSTALLATION 15-11
CL LATCH TOOL 15-11
RMS JOINT ALIGN 15-11
MPM STOW/DEPLOY 15-12
RMS TIEDOWN 15-12
RMS FLIGHT RELEASABLE GRAPPLE FIXTURE RELEASE 15-12
PRLA OPEN/CLOSE 15-12
PRLA OPEN/CLOSE (CONT) 15-13
KU ANTENNA STOW 15-13
KU ANTENNA STOW (CONT) 15-13
AIRLOCK EGRESS 15-13

FLIGHT SPECIFIC REFERENCE 16-i
UNSCHEDULED/CONTINGENCY EVA TASKS ..... TEMP FS 16-1
15A WORKAROUNDS CRIBSHEET
EVA 1 ..... FS 16-3
EVA 2 ..... FS 16-6
EVA 3 ..... FS 16-6
EVA 4 ..... FS 16-9
GENERIC
APFR/IAPFR ..... FS 16-10
BALLSTACK ..... FS 16-10
BRT ..... FS 16-11
CANNON CONNECTOR ..... FS 16-11
EVA WRENCH (TORQUE AND RATCHET) ..... FS 16-11
FLUID QD OPS ..... FS 16-11
MUT EE ..... FS 16-14
MWS ..... FS 16-15
NZGL CONNECTORS ..... FS 16-15
PAD ..... FS 16-17
PGT ..... FS 16-17
SAFETY TETHER ..... FS 16-18
SCOOPS ..... FS 16-19
SOCKET CADDY ..... FS 16-19
TA CLAMP ..... FS 16-19
TETHER SHUTTLE ..... FS 16-19
TORQUE MULTIPLIER ..... FS 16-20
TSA (HWTSA) ..... FS 16-21
S5/S6 ATTACH
16.1a RTAS GAP CLOSURE (CORNER 1 OR 2) ..... FS 16-22
16.1b RTAS GAP CLOSURE (CORNER 3 OR 4) ..... FS 16-24
CAPTURE BAR ROTATION ..... FS 16-25
ATTACH S6 TO S5 USING CONTINGENCY FASTENERS ..... FS 16-27
PRD S5-S6 OVERVIEW ..... FS 16-30
PRD RTAS CORNER 1 (PRIMARY) ..... FS 16-31
PRD RTAS CORNER 1 (PRIMARY) NBL ..... FS 16-32
PRD RTAS CORNER 2 ..... FS 16-33
PRD RTAS CORNER 2 NBL ..... FS 16-34
PRD RTAS CORNER 3 ..... FS 16-35
PRD RTAS CORNER 3 NBL (STRAP ROUTING) ..... FS 16-36
PRD RTAS CORNER 3 NBL ..... FS 16-38
PRD RTAS CORNER 4 (PRIMARY) ..... FS 16-39
PRD RTAS CORNER 4 (PRIMARY) NBL ..... FS 16-40
PRD RTAS CORNER 4 (PRIMARY) (STRAP ROUTING) ..... FS 16-41
PVR
S6 RADIATOR MANUAL OVERRIDE TO DEPLOY/RETRACT ..... FS 16-43
SAW
PRD 4-BAR ROUTING ..... FS 16-48
MANUAL OVERRIDE TO DISENGAGE BETA GIMBAL
ANTI-ROTATION LATCH ..... FS 16-52
BMRRM ANTI-ROTATION LATCH TABLE ..... FS 16-53
MANUAL RELEASE OF SABB RESTRAINT PINS ..... FS 16-54
MANUAL OVERRIDE TO UNLATCH/LATCH (TENSION) SABB ..... FS 16-57
MANUAL OVERRIDE TO EXTEND/RETRACT MAST ..... FS 16-59
ASSISTED SOLAR ARRAY DEPLOY/RETRACT ..... FS 16-62
SABB SPOOL RE-TENSION ..... FS 16-68
MANUAL SAW JETTISON ..... FS 16-74

TIE-DOWN PLAN
GAP CHECK TOOL TIE-DOWN ..... FS 16-80
SABB LAUNCH RESTRAINT TIE-DOWN ..... FS 16-81
UCCAS/PAS TIE-DOWN ..... FS 16-82
RPCM TIE-DOWN ..... FS 16-84
WETA/DUMMY BOX TIE-DOWN ..... FS 16-85
MISC
BMRRM REMOVE/REPLACE ..... FS 16-89
DCSU REMOVE AND REPLACE ..... FS 16-94
DDCU REMOVE AND REPLACE ..... FS 16-99
DLA REMOVE AND REPLACE ..... FS 16-104
MBSU REMOVE/REPLACE ..... FS 16-112
RJMC REMOVE AND REPLACE ..... FS 16-119
SSRMS JOINT DRIVE ..... FS 16-120
SARJ – TBA REMOVE/INSTALL ..... FS 16-124
BCDU REMOVE/REPLACE ..... FS 16-130
GENERIC EVA INHIBIT PAD ..... FS 16-139
GENERIC NOTES, CAUTIONS, & WARNINGS ..... FS 16-144

GENERIC EVA REFERENCE 17-1

FLIGHT SPECIFIC EVA REFERENCE ..... FS 18-1
PAYLOAD BAY CONFIGURATION ..... FS 18-3
S6
S6 OVERVIEW ..... FS 18-4
S6 LONG SPACER ..... FS 18-5
S6 IEA (NON-KEEL SIDE) AND NON-PVR SIDE ..... FS 18-8
S6 IEA (KEEL SIDE) AND NON-PVR SIDE ..... FS 18-9
S6 IEA (KEEL SIDE) AND PVR SIDE ..... FS 18-10
S6 STARBOARD, NON-KEEL UP ..... FS 18-11
S6 STARBOARD, KEEL UP ..... FS 18-12
GAP CHECK TOOL ..... FS 18-13
S5 CAPTURE LATCH ASSEMBLY (CLA) ..... FS 18-14
S6 SSU SHROUD MLI FOLDING SEQUENCE ..... FS 18-15
SAW
BGA PRIMARY POWER CABLE CLAMPS ..... FS 18-16
RELEASE BETA GIMBAL LAUNCH RESTRAINTS ..... FS 18-17
FOUR BAR IN LOCKED POSITION ..... FS 18-18
SABB UNSTOW ..... FS 18-19
4-BAR STOWED AND DEPLOYED CONFIGURATIONS ..... FS 18-22
MAST CANISTER MDA ..... FS 18-23
CETA CART
CETA CART – TOP VIEW ..... FS 18-24
CETA CART – SWING ARMS AND WIF MARKINGS ..... FS 18-25
CETA CART – COUPLERS ..... FS 18-26
CETA CART – WHEEL BOGIES ..... FS 18-27
SPDM/SSRMS
SPDM ASSY ..... FS 18-28
SPDM CAMERA LIGHT ASSY (CLA) ..... FS 18-29
SPDM CAMERA LIGHT PAN TILT ASSY (CLPA) ..... FS 18-31
SPDM ORU TOOL CHANGEOUT MECHANISM (OTCM) ..... FS 18-33
SPDM ELECTRONICS PLATFORM (EP) #1 ..... FS 18-35
SPDM ELECTRONICS PLATFORM 1 (EP1) COVER ..... FS 18-37
LEE SNARE REPAIR ..... FS 18-38
UCCAS/PAS
UCCAS/PAS DEPLOY ..... FS 18-40

JLP
JLP GPS ANTENNA WITH COVER ..... FS 18-43
JLP GPS ANTENNA OVERVIEW ..... FS 18-44
JLP GPS ANTENNA CABLE/CONNECTOR LOCATION AND ID ..... FS 18-46
WETA
WETA ASSY AND S3 CP1 INSTALL BRACKET ..... FS 18-47
CP1 WETA INSTALL ..... FS 18-48
ETVCG DUMMY BOX ..... FS 18-49
MISC
S0 1A_D RPCM ..... FS 18-50
CONNECTOR GROUNDING SLEEVES ..... FS 18-51
ORU CONTINGENCY TIE-DOWN DEFINITIONS ..... FS 18-52

EVA EMERGENCY 19-i
EMERGENCY PROCEDURES 19-1
EMERGENCY AIRLOCK REPRESS 19-3
EMERGENCY AIRLOCK REPRESS 19-4
POST EMERGENCY AIRLOCK REPRESS 19-4
SAFER RESCUE 19-5
SAFER RESCUE 19-6
DAP/EVA RESCUE/RETRIEVE 19-7
EVA ORBITER CONFIG 19-7
EVA RESCUE/RETRIEVE 19-9
19.1 DCS TREATMENT 19-10
CONTINGENCY SHUTTLE AIRLOCK INGRESS FROM ISS 19-13

CUE CARD CONFIGURATION 20-1

AIRLOCK PREP ..... TEMP FS 2-2
EMU SWAP 2-3
BOOSTER FAN DEACTIVATION/REMOVAL 2-4
BOOSTER FAN INSTALLATION/ACTIVATION 2-4
EMU REMOVAL 2-4
EMU INSTALLATION 2-4
EMU CHECKOUT PREP ..... TEMP FS 2-5
LTA RESTRAINT STRAP REMOVAL ..... TEMP FS 2-6
LTA RESTRAINT STRAP INSTALLATION ..... TEMP FS 2-6
EVA PREP FOR TRANSFER TO ISS ..... FS 2-7
POST-DOCKING EVA TRANSFER AND RECONFIG ..... FS 2-9
EMU RESIZE ..... FS 2-10
EMU SWAP FOR EVA 2 ..... FS 2-11
EMU SWAP FOR EVA 3 ..... FS 2-12
EMU SWAP FOR EVA 4 ..... FS 2-13
POST EVA EMU RECONFIG AND TRANSFER ..... FS 2-14
EVA UNPACK AND STOW ..... FS 2-17

AIRLOCK PREP (50 min)

	Retrieve or unstow following equipment:
MF28G	3/8-in breaker bar, 4-in ext w/3/8-in drive
IFM Tool Kit	1/2-in socket w/3/8-in drive
Vol H	EMU Equipment Bag – attach to middeck wall
	EMU Servicing Kit
	Helmet Lights
	EVA Bag
	Contamination Detection Kit (location flight specific)
FDF Locker	Cuff Checklists (2) – stow in EMU Equipment Bag
	DEPRESS/REPRESS Cue Card

AIRLOCK CONFIG

1. √Inner hatch Equal vlv (two) – OFF

AW18A

2. LTG FLOOD (four) – ON
3. Remove from airlock, as reqd:
   - Airlock Stowage Bag
   - Airlock Floor Pallet using 3/8-in breaker bar, 4-in ext w/3/8-in drive, and 1/2-in socket w/3/8-in drive
4. Stow Vol H Bags in Vol H
5. Transfer to airlock:
   - EVA Bag – install on airlock wall
   - DEPRESS/REPRESS Cue Card
   - Helmet Lights
   - Contamination Detection Kit – install on airlock wall
6. Install IVA foot restraint, as reqd
7. Unbuckle SCU straps, Velcro SCU to wall
8. Install EMU lights on helmets (EMU 1,EMU 2)
9. Disconnect helmets from Airlock EMUs, temp stow
10. Remove comm caps from LTA Restraint Bags and connect to electrical harnesses
11. Install helmets (not reqd if proceeding directly to EMU Checkout)
12. Remove LTA Restraint Bags
13. Disconnect waist rings; remove and stow any equipment stowed in HUT/LTA
14. Stow LTA Restraint Bags on AAPs
15. √Thermal cover clear of waist ring
16. Waist ring – engage posn
17. Connect LTA to HUT, lock
18. Remove 20-g Crash Bag from middeck EMU, as reqd

EMU CHECKOUT PREP (30 min)

Airlock

1. LTG FLOOD (four) – on
2. If necessary, remove Airlock Floor Bag from Airlock
3. Unstow from Airlock Floor Bag:
   - Sw 1 LCVG
   - An 1 LCVG

   Temp stow in Airlock
4. Unbuckle SCU straps, Velcro SCU to wall
5. Disconnect helmets from EMUs, temp stow
6. √DIDB restraint bags installed
7. Remove comm caps (4) from LTA Restraint Bags (kangaroo pouches)

   <u>For EMU 3017 (Sw)</u>
   - Connect comm cap Sw 1 to EMU electrical harness
   - Temp stow comm cap Sw 2 (for Sw ECOK, step 10)

   <u>For EMU 3006 (An)</u>
   - Adjust An 1 earcups ~ 1/2 inch lower
   - Connect comm cap An 1 to EMU electrical harness
   - Stow comm cap Ac 1 in Airlock Floor Bag
8. Disconnect LTA Restraint Bag straps from AAP; temp stow
9. Disconnect waist rings; remove Sw, An ECOKs
10. Stow comm cap Sw 2 in Sw ECOK
11. Temp stow Sw, An ECOKs in Airlock
12. Temp stow LTA Restraint Bags on AAPs (bottom)
13. √Thermal cover clear of waist rings
14. Waist rings – engage position
15. Connect LTAs to HUTs, lock

Middeck Vol H (MD23R)

16. Unstow:
    - Inboard Bag:
      - From EMU Equipment Bag (Danny Bag)
        - Temp stow for EMU Checkout
          - SCOFs (2)
          - LTA Donning Handles (2)
      - EMU Servicing Kit s/n 5004
17. Stow Inboard Bags in Vol H

    (<u>NOTE</u>: SCOFs (2) and LTA Donning Handles (2) will be stowed back in EMU Equipment Bag after EMU Checkout)

Airlock

18. As required, temp stow Airlock Floor Bag, ECOKs, EMU Servicing Kit s/n 5004 (for EVA Prep for Transfer to ISS)
19. Remove 85-ft Safety Tethers (2) from Bag C, stow on EMUs
20. Unstow ISS EVA Cuff C/L (3) from SODF locker

    Stow Sw, An C/L on EMUs, left arm

    Stow Ac C/L in Airlock Floor Bag

LTA RESTRAINT STRAP REMOVAL (15 min)

NOTE
May be performed on EMU 1 and 2 simultaneously.
Perform steps as reqd for current EMU config

1. As reqd, remove comm cap from LTA Restraint Bag; temp stow
2. Remove EMU from AAP
3. Disconnect all restraint attachments from SAFER mount brackets (two)
4. Loosen cinch strap mechanism, remove SAFER mount brackets
5. Remove strap from PLSS
6. Stow strap in LTA Restraint Bag Pouch with D-rings (three) connected
7. Engage EMU in AAP
8. Stow LTA Restraint Bag/strap

LTA RESTRAINT STRAP INSTALLATION (15 min)

NOTE
May be performed on EMU 1 and 2 simultaneously. Perform steps as reqd for current EMU config. Procedure written to install in Launch/Landing config shown below

1. Unstow LTA Restraint Bag/strap
2. Remove EMU from AAP
3. Install SAFER mount brackets (two)
4. Install elastic band of strap around SOP
5. Tighten cinch strap mechanism
6. Attach strap French hooks (two) to SAFER mount brackets
7. Engage EMU in AAP
8. Stow LTA, suit arms inside LTA Restraint Bag
9. Connect upper spring hooks (two) over suit shoulders to upper AAP attachment rings (two)
10. Connect lower spring hooks (two) around suit arms to SAFER mount brackets (two)
11. Tighten all LTA bag straps with bag as high as possible on EMU

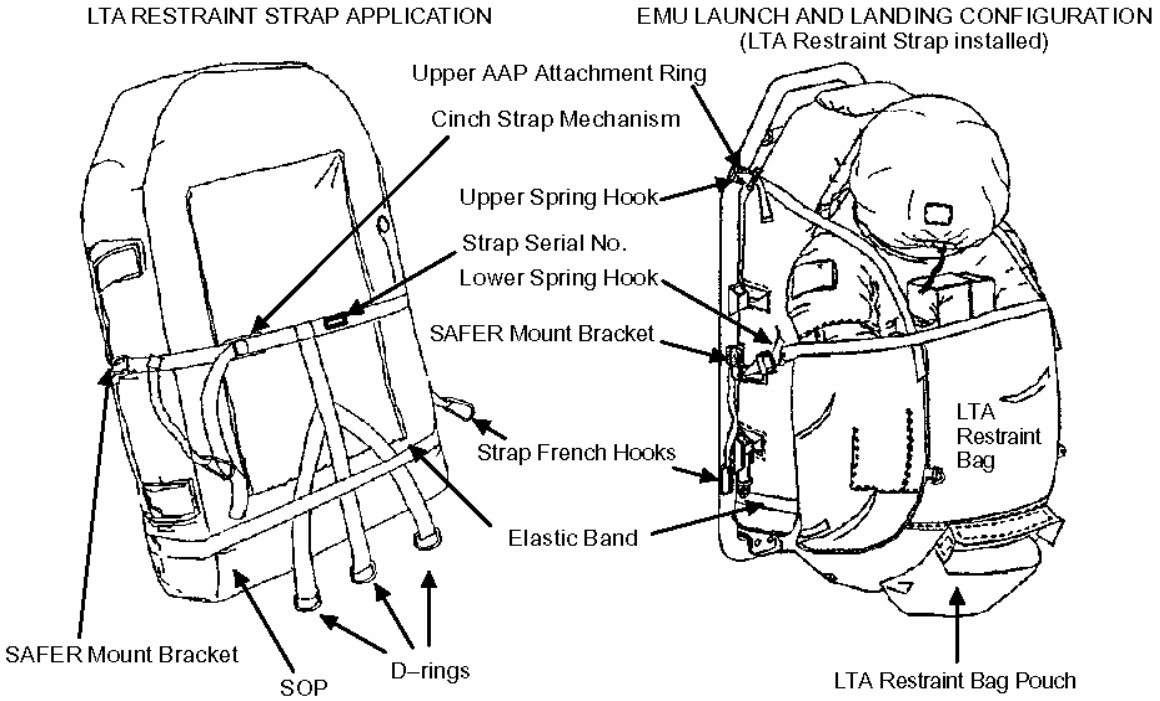

NOTE
French hooks should be attached to SAFER mount brackets for launch and landing

EVA PREP FOR TRANSFER TO ISS (90 min)

BOTH EMUs/ DCM

1. √SCOFs and Donning Handles stowed
2. √PWR – SCU
3. √PURGE vlv – op (up)
4. √WATER – OFF, switch guard installed
5. √O2 ACT – OFF
6. Retrieve the following:

Airlock Floor Bag
EMU Servicing Kit

7. Configure/verify items according to tables below:

EMU 3017 (Sw)	**EMU 3006 (An)**
☐ DIDB Restraint Bag (verified during EMU CO) ☐ Comm Cap (Sw 1) (installed during EMU CO) ☐ Helmet (√sun shade down, cover installed) ☐ Valsalva ☐ EMU Gloves (Sw 1) ☐ Cuff C/L ☐ Wrist Mirror (2) ☐ EMU Battery (verify s/n at REBA Installation) ☐ CCC (LiOH, verify s/n at REBA Installation) ☐ LTA ☐ ECOK ☐ LTA Restraint and Strap ☐ 85-ft Safety Tether	☐ DIDB Restraint Bag (verified during EMU CO) ☐ Comm Cap (An 1) (installed during EMU CO) ☐ Helmet (√sun shade down, cover installed) ☐ Valsalva ☐ EMU Gloves (An 1) ☐ Cuff C/L ☐ Wrist Mirror (2) ☐ EMU Battery (verify s/n at REBA Installation) ☐ CCC (LiOH, verify s/n at REBA Installation) ☐ LTA ☐ ECOK ☐ LTA Restraint and Strap ☐ 85-ft Safety Tether
EMU Crew Options Kit (Sw)	**EMU Crew Options Kit (An)**
☐ ECOK – Mesh Bag ☐☐ Sw EVA 1, 2 & 4 Ziplock Bags ☐☐☐ 2 per EVA, MAGs (w/Ziplock Bags) ☐☐☐ TCUs (top, bottom) ☐☐☐ Socks ☐☐☐ Wristlets ☐☐☐ Comfort Gloves ☐☐☐ 3, 7/8-in dia Velcro loop ☐☐☐ 3, 7/8-in dia Velcro hook EVA 2 bag only: ☐ EV identifier stripes (EV1) ☐ Mission patch (STS-119) ☐ US flag ☐ Mesh Bags (2) ☐ Comm Cap (Sw 2) ☐ Crew personal items for Campout (as reqd)	☐ ECOK – Mesh Bag ☐☐ An EVA 1, 3 & 4 Ziplock Bags ☐☐☐ 2 per EVA, MAGs (w/Ziplock Bags) ☐☐☐ TCUs (top, bottom) ☐☐☐ Socks ☐☐☐ Wristlets ☐☐☐ Comfort Gloves ☐☐☐ 3, 7/8-in dia Velcro loop ☐☐☐ 3, 7/8-in dia Velcro hook EVA 3 bag only: ☐ EV identifier stripes (EV2) ☐ Mission patch (STS-119) ☐ US flag ☐ Crew personal items for Campout (as reqd)

EVA PREP FOR TRANSFER TO ISS (90 min) (Cont)

Airlock Floor Bag ☐ EMU Battery s/n 2076 ☐ EMU Gloves – 4 pair (Ac 1, Ac 2, An 2, Sw 2) ☐ Comm Cap – 2 (Ac 1, Ac 2) ☐ LCVG – 3 (Sw 1, An 1, Ac 1) ☐ Cuff C/L ☐ Wrist Mirrors (2) ☐ ECOK (Ac) – Mesh Bag ☐☐ Ac EVA 2 & 3 Ziplock Bags ☐☐ 2 per EVA, MAGs (w/Ziplock Bags) ☐☐ TCUs (top, bottom) ☐☐ Socks ☐☐ Wristlets ☐☐ Comfort Gloves ☐☐ 3, 7/8-in dia Velcro loop ☐☐ 3, 7/8-in dia Velcro hook ☐☐ EV identifier stripes (EV3) ☐☐ Mission patch (STS-119) ☐☐ US flag ☐ Crew personal items for Campout (as reqd) ☐ Crewlock Bag ☐ Adjustable Equipment Tethers (2) Gap Spanners (6) ☐ 4 – 307 (72 in) ☐ 2 – 305 (45 in) Connector Sleeve (8) ☐ 4 – Cnctr Sleeve 21/25 ☐ 4 – Cnctr Sleeve 33/37 <u>(Not Planned for Use)</u> ☐ EMU LiOH Canister (2) ☐ Crack Repair Pallet (2)	☐ EMU Servicing Kit s/n 5004

POST-DOCKING EVA TRANSFER AND RECONFIG (60 min)

NOTE

This procedure assumes that transfer items were preconfigured per EVA PREP FOR TRANSFER TO ISS

1. Transfer the following EVA equipment to ISS:

Item	**Final Destination**	**Transfer Status**
EMU 3017 (Sw)	E-Lk aft EDDA	
EMU 3006 (An)	E-Lk fwd EDDA	
EMU Servicing Kit	E-Lk	
Airlock Floor Bag	E-Lk	

2. Stow EMU Servicing Kit s/n 5004 in E-Lk (for ISS CDR)

BOTH EMUs

3. Remove LTA Restraint Strap and LTA Restraint Bag
   Perform LTA restraint removal
   Stow LTA Restraint Strap and LTA Restraint Bag in EVA Systems Transfer Bag

4. Install Helmet Lights/EMU TV assembly per STS-119 EVA CONSUMABLES TRACKING CUE CARD

During REBA INSTALLATION:

5. Verify expected LiOH and EMU Battery s/n's installed per STS-119 EVA CONSUMABLES TRACKING CUE CARD

EMU RESIZE (30 min)

EMU 3005 CONFIGURATION FOR ACABA

NOTE

Procedure assumes Expedition 18 has already completed the following:

- REBA, METOX canister and EMU Battery installed in EMU 3005
- EMU 3005 resized for Ac (sizing cams verified per Ac NOMINAL RESIZE)
- EMU 3005 installed on forward EDDA, aft EDDA empty

Airlock Floor Bag

☐ 1. Unstow Ac 1 Comm Cap from Airlock Floor Bag

EMU 3005 (Ac)

☐ 2. Disconnect helmet
Connect Comm Cap Ac 1 to EMU electrical harness
√DIDB restraint bag installed
Connect Helmet, √locked and cover installed

☐ 3. Retrieve EV3 cuff checklist from Airlock Floor Bag
Install on left arm

☐ 4. Remove lower arm covers, stow in Ac ECOK
Unstow Ac 1 gloves from Airlock Floor Bag
Connect Ac 1 gloves to lower arms
√Glove heater cable connected at upper arm
√Arms aligned
Connect glove heater cables
√Lower arms cams in S - S position

☐ 5. Install Wrist Mirrors (2) from Airlock Floor Bag

☐ 6. Retrieve EVA 2 ziplock bag from Ac ECOK
Install the following items on EMU 3005:
- ☐ STS-119 Mission patch
- ☐ US flag
- ☐ EV3 Crew Identifier stripes (PLSS/LTA)

Return EVA 2 ziplock to Ac ECOK

☐ 7. Stow Ac ECOK in Airlock Floor Bag

☐ 8. √Helmet PV closed/locked
√LTA locked

☐ 9. √METOX, EMU Battery, REBA Installed
Reference STS-119 EVA CONSUMABLES CUE CARD

☐ 10. Remove EMU 3005 from fwd EDDA
Install LTA Restraint Strap and LTA Restraint Bag
Perform LTA Restraint installation

☐ 11. Transfer EMU 3005 to Node 1

EMU SWAP FOR EVA 2 (30 min)

NOTE

This procedure assumes the following procedures have been completed following EVA 1:
{1.240 POST EVA} (SODF: ISS EVA SYS: EVA PREP/POST)
{1.605 BSA BATTERY RECHARGE - term} (SODF: ISS EVA SYS: BATTERY OPS)

EMU 3006 (An)

☐ 1. √Helmet installed, sun shades down, sun visor retracted
Remove helmet cover, temp stow
Remove helmet lights/EMU TV assembly
Temp stow helmet lights/TV assembly

☐ 2. √Used EV2 undergarments (TCUs, socks, wristlets, comfort gloves) stowed for return on Shuttle

☐ 3. Connect waist ring to HUT

☐ 4. Connect An 1 gloves to lower arms

☐ 5. √LiOH (used) installed, EMU Battery removed

☐ 6. Retrieve LTA Restraint Strap and LTA Restraint Bag from Airlock Floor Bag
Perform LTA Restraint installation

☐ 7. Remove EMU from fwd EDDA
Transfer EMU to Node 1

☐ 8. Gather EV2 (An) EMU crew-specific items and place in An ECOK
Stow An ECOK and LCVG in Airlock Floor Bag

EMU 3005 (Ac)

☐ 9. Transfer EMU to E-Lk
Perform LTA Restraint removal
Install EMU on fwd EDDA
Stow LTA Restraint Bag and LTA Restraint Strap in Airlock Floor Bag

☐ 10. Install Helmet Lights/EMU TV assembly
√Sun shades down. Install helmet cover

☐ 11. Unstow Ac ECOK and LCVG from Airlock Floor Bag

During 1.515 EMU METOX/LiOH/BATTERY REPLACEMENT:

EMU 3017 (Sw)

☐ 12. When LiOH (used) removed, cover canister ports with METOX caps or Kapton tape

☐ 13. Temp stow LiOH (used) in Airlock Floor Bag

EMU SWAP FOR EVA 3 (30 min)

NOTE

This procedure assumes the following procedures have been completed following EVA 2:
{1.240 POST EVA} (SODF: ISS EVA SYS: EVA PREP/POST)
{1.605 BSA BATTERY RECHARGE - term} (SODF: ISS EVA SYS: BATTERY OPS)

CONFIGURE SWANSON'S EMU FOR STOWAGE

EMU 3017 (Sw)

☐ 1. √Helmet installed, sun shades down, sun visor retracted
Remove helmet cover, temp stow
Remove helmet lights/EMU TV assembly
Temp stow helmet lights/TV assembly

☐ 2. √Used EV1 undergarments (TCUs, socks, wristlets, comfort gloves) stowed for return on Shuttle

☐ 3. Connect waist ring to HUT

☐ 4. Connect Sw 1 gloves to lower arms

☐ 5. Retrieve LTA Restraint Strap and LTA Restraint Bag from Airlock Floor Bag
Perform LTA Restraint installation

☐ 6. Remove EMU from aft EDDA
Transfer EMU 3017 to Node 1

☐ 7. Gather EV1 (Sw) EMU crew-specific items and place in Sw ECOK
Stow Sw ECOK and LCVG in Airlock Floor Bag

CONFIGURE ARNOLD'S EMU FOR EVA 3

EMU 3006 (An)

☐ 8. Transfer EMU 3006, An ECOK and LCVG to E-Lk
Perform LTA Restraint removal
Install EMU on aft EDDA
Stow LTA Restraint Bag and LTA Restraint Strap in Airlock Floor Bag

☐ 9. Install Helmet Lights/EMU TV assembly
√Sun visors down, cover installed

☐ 10. √Wrist Mirrors (two) installed

During 1.515 EMU METOX/LiOH/BATTERY REPLACEMENT:

EMU 3006 (An)

☐ 11. When LiOH (used) removed, cover canister ports with METOX caps or Kapton tape

☐ 12. Temp stow LiOH (used) in Airlock Floor Bag

EMU 3005 (Ac)

☐ 13. Stow EMU Battery s/n 2037 in Airlock Floor Bag

EMU SWAP FOR EVA 4 (90 min)

NOTE

This procedure assumes the following prcedures have been completed following EVA 3:
{1.240 POST EVA} (SODF: ISS EVA SYS: EVA PREP/POST)
{1.605 BSA BATTERY RECHARGE - term} (SODF: ISS EVA SYS: BATTERY OPS)

EMU 3005 (Ac)

☐ 1. Remove Helmet Lights/EMU TV assembly; temp stow

☐ 2. Disconnect Comm Cap (Ac 1), stow in Airlock Floor Bag

☐ 3. Install helmet, √sun shades down and visor up; install helmet cover

☐ 4. Connect waist ring to HUT

☐ 5. Remove Wrist Mirrors (2); temp stow in Airlock Floor Bag

☐ 6. Remove Ac 1 gloves and install lower arm covers
Stow gloves and LCVG in Airlock Floor Bag

☐ 7. Remove Cuff C/L
If desired, remove crew notes pages and stow pages in Ac ECOK
Stow Cuff C/L in Airlock Floor Bag

☐ 8. Remove mission patch, US flag and stripes
Stow in Ac ECOK

☐ 9. Gather EV3 (Ac) EMU crew-specific items and place in Ac ECOK
Stow Ac ECOK in Airlock Floor Bag

☐ 10. √Used EV3 undergarments (TCUs, socks, wristlets, comfort gloves) stowed for return on Shuttle

☐ 11. Retrieve LTA Restraint Strap and Bag from Airlock Floor Bag
Remove EMU from fwd EDDA
Perform LTA Restraint installation
Stow EMU in Node 1

EMU 3006 (An)

☐ 12. Remove EMU from aft EDDA
Install in fwd EDDA

EMU 3017 (Sw)

☐ 13. Transfer EMU 3017 (Sw) from Node 1 to E-Lk
Perform LTA Restraint removal
Install EMU in aft EDDA
Stow LTA Restraint Bag and LTA Restraint Strap in Airlock Floor Bag
Unstow Sw ECOK and LCVG from Airlock Floor Bag

☐ 14. Remove helmet cover, install Helmet Lights and EMU TV
√Sun shades down, visor up and install cover

POST EVA EMU RECONFIG AND TRANSFER (90 min)

This procedure configures an ISS suit 3004 for Arnold's return EMU (leaving his Shuttle EMU 3006 and helmet on ISS) and leaves Swanny's LTA on ISS (swapping LTAs with EMU 3004). Also, this procedure assumes EMUs have been left disassembled (helmet, gloves, LTA loose) post EVA 4 for overnight suit dry-out

EMU 3017/ (Sw) 1. Remove Comm Caps, stow in Airlock Floor Bag
EMU 3006 (An)

2. Remove Cuff C/Ls
   If desired, remove crew notes pages and stow pages in your ECOK
   Stow Cuff C/Ls in Airlock Floor Bag

3. Remove mission patch, US flag and stripes (DCM/PLSS/LTA)
   Stow in Sw, An ECOKs

4. Remove Sw 2 comm cap from Sw ECOK
   Stow in Airlock Floor Bag

5. Inspect and compare all on-orbit EMU wrist mirrors (12) – 2 Ac Airlock Floor Bag, 2 each on Sw, An suits
   Stow best quality wrist mirrors (6) in ISS A/L MO2 bag, s/n 1038
   Report serial numbers and final stowage locations to MCC

   Install remaining wrist mirrors (6) in Airlock Floor Bag

EMU 3017 (Sw) 6. Remove METOX canister, EMU Battery and REBA
   Stow in ISS A/L MO2 Bag, s/n 1038

7. Install expended LiOH canister from Airlock Floor Bag
   Install designated EMU battery for return (use Return ↓Config) per <u>STS-119 CONSUMABLES TRACKING CUE CARD</u>

DCMs 8. √PWR – SCU
   √PURGE vlv – op (up)
   √O2 ACT – OFF
   √WATER – OFF, switch guard installed

<u>EMU 3006 Config for ISS</u>

EMU 3006 (An↑) 9. Install lower arm covers (from EMU 3004)
   √DIDB Restraint Bag in HUT
   Install An helmet, s/n 1078, with helmet lights/EMU TV installed
   √Helmet locked, sun shades down, cover installed
   Connect Sw LTA s/n 2076 (bladder 045)
   Remove EMU 3006 from fwd EDDA, temp stow

<u>Arnold EMU Return Config</u>

EMU 3004 (An↓) 10. Install EMU 3004 in fwd EDDA, remove LTA Restraint Bag if required
   Install gloves, An 1
   Remove LTA s/n 2057 (bladder 007), install on Sw EMU 3017
   √DIDB Restraint Bag in HUT
   Stow An ECOK and LCVG in HUT
   Install An LTA s/n 2081 (bladder s/n 018)

11. Unzip rear PLSS TMG, remove vent port plugs and stow in Danny Bag
   Install expended LiOH canister from Airlock Floor Bag
   Install designated EMU battery for return (use Return ↓Config) per <u>STS-119 CONSUMABLES TRACKING CUE CARD</u>

POST EVA EMU RECONFIG AND TRANSFER (90 min) (Cont)

EMU 3004 12. Retrieve LTA Restraint strap and bag from Airlock Floor Bag
Remove EMU 3004 from fwd EDDA
Perform LTA Restraint installation
Stow EMU 3004 in Node 1 pending transfer

<u>Swanson EMU Config</u>

EMU 3017 13. √DIDB Restraint Bag in HUT
Install Sw helmet, s/n 1071
Remove Helmet lights/TV assembly; stow on ISS
√Helmet locked, sun shades down, cover installed

14. Stow Sw ECOK and LCVG in HUT
Install LTA s/n 2057 (bladder s/n 007)

15. Retrieve LTA Restraint strap and bag
Remove EMU 3017 from aft EDDA
Perform LTA Restraint installation
Stow EMU 3017 in Node 1 pending transfer

<u>EMU 3006 Config for ISS</u>

EMU 3006 16. Install EMU 3006 in fwd EDDA

17. Install 3005 in aft EDDA

18. Stow following in Airlock Floor Bag:
Transfer to Shuttle mesh bag
85-ft Safety Tethers – 2 (s/n 1001, 1004)
EMU Servicing Kit (s/n 5005)

19. Verify all items for transfer per table (next page):

POST EVA EMU RECONFIG AND TRANSFER (90 min) (Cont)

EMU 3017 (Sw)	**EMU 3004 (An)**
☐ DIDB Restraint Bag ☐ Sw ECOK ☐ Sw LCVG ☐ Helmet s/n 1071 ☐ EMU Gloves (Sw 1) ☐ EMU Battery ☐ CCC (LiOH) (used) ☐ LTA ☐ LTA Restraint and Strap	☐ DIDB Restraint Bag ☐ An ECOK ☐ An LCVG ☐ Helmet s/n 1069 ☐ EMU Gloves (An 1) ☐ EMU Battery ☐ CCC (LiOH) (used) ☐ LTA ☐ LTA Restraint and Strap
ECOK (Sw) ☐☐☐ EVA 1, 2, & 4 Ziplock Bags (less used items) ☐ MAGs ☐ TCUs (top, bottom) ☐ Socks ☐ Wristlets ☐ Comfort Gloves ☐ Flag, patch and EV1 stripes	ECOK (An) ☐☐☐ EVA 1, 3, & 4 Ziplock Bags (less used items) ☐ MAGs ☐ TCUs (top, bottom) ☐ Socks ☐ Wristlets ☐ Comfort Gloves ☐ Flag, patch and EV2 stripes
Airlock Floor Bag ☐ EMU Battery s/n 2037 ☐ Ac ECOK: ☐☐ EVA 2 & 3 Ziplock Bags (less used items) ☐ MAGs ☐ TCUs (top, bottom) ☐ Socks ☐ Wristlets ☐ Comfort Gloves ☐☐ Flag, patch and EV3 stripes ☐ LCVG (Ac 1) ☐ Comm Cap – 5 (Ac 1, Ac 2, Sw 1, Sw 2, An 1) ☐ EMU Gloves 4 pair (Ac 1, Ac 2, Sw 2, An 2) ☐ Cuff C/L – 3 (Ac, An, Sw) ☐ Wrist Mirrors (6) ☐ 85-ft Safety Tether (2) (s/n 1001, 1005) ☐ EMU Servicing Kit (s/n 5005) (Not Planned for Use) ☐ EMU LiOH Canister (2) ☐ Crack Repair Pallet (2)	Transfer to Shuttle Bag ☐ Torque wrench s/n 1007 ☐ 4 locking strut aids

20. Transfer following EVA equipment to Shuttle:

Item	Destination	Transfer Status
EMU 3017 (Sw)	Temp stow in Middeck	
EMU 3004 (An)	Temp stow in Middeck	
Airlock Floor Bag	Temp stow in Middeck	

21. Report transfer status to MCC

EVA UNPACK AND STOW (60 min)

NOTE
This procedure assumes that transfer items were preconfigured per EVA PREP FOR TRANSFER TO SHUTTLE

1. Unpack and stow items per table below; report status to MCC when complete:

Current Location	Item	Final Stowage Location	Status
Middeck	EMU 3017 (Sw)	External A/L (Stbd AAP)	
	EMU 3004 (An)	External A/L (Port AAP)	
Middeck (Airlock Floor Bag)	Comm Cap (Sw 1 & Sw 2)	EMU 3017 LTA Restraint Bag (kangaroo pouch)	
	Comm Cap (An 1 & Ac 1)	EMU 3004 LTA Restraint Bag (kangaroo pouch)	
	EMU Servicing Kit (s/n 5005)	Vol H Inboard (MD23R)	

This Page Intentionally Blank

119 (15A) EVA OV BASELINE ..... FS 7-3
EVA 1
EVA 1 SUMMARY TIMELINE ..... FS 7-5
EVA 1 INHIBIT PAD ..... FS 7-6
EVA 1 NOTES, CAUTIONS, AND WARNINGS ..... FS 7-8
EVA 1 TOOL CONFIG ..... FS 7-13
EVA 1 A/L EGRESS AND SETUP ..... FS 7-15
EVA 1 ATTACH S6 TO S5 ..... FS 7-18
EVA 1 CONNECT S5 TO S6 UMBILICALS ..... FS 7-26
EVA 1 RELEASE SABB RESTRAINTS ..... FS 7-30
EVA 1 PVR RADIATOR CINCHES AND WINCH RELEASE ..... FS 7-34
EVA 1 ROTATE IEA KEEL PIN AND RELEASE SAW BETA GIMBAL RESTRAINTS ..... FS 7-36
EVA 1 UNSTOW SABB, RELEASE MAST, AND REMOVE ECU/SSU SHROUD ..... FS 7-42
EVA 1 S6 MMOD SHIELD BOLT TORQUE RELEASE (GET-AHEAD) ..... FS 7-46
EVA 1 CLEANUP ..... FS 7-48
EVA 1 A/L INGRESS ..... FS 7-49
EVA 2
EVA 2 SUMMARY TIMELINE ..... FS 7-53
EVA 2 INHIBIT PAD ..... FS 7-54
EVA 2 NOTES, CAUTIONS, AND WARNINGS ..... FS 7-57
EVA 2 TOOL CONFIG ..... FS 7-62
EVA 2 A/L EGRESS AND SETUP ..... FS 7-64
EVA 2 BATTERY PREP ..... FS 7-67
EVA 2 P3 NADIR UCCAS DEPLOY ..... FS 7-69
EVA 2 P1 RBVM MLI REPAIR, P1/P3 FLUID JUMPER INSTALL, AND FHRC P-CLAMP RELEASE ..... FS 7-73
EVA 2 S3 OUTBOARD ZENITH PAS DEPLOY ..... FS 7-77
EVA 2 TOOL STANCHION RELOCATE/APFR RETRIEVE ..... FS 7-85
EVA 2 CLEANUP/INGRESS ..... FS 7-86
EVA 3
EVA 3 SUMMARY TIMELINE ..... FS 7-89
EVA 3 INHIBIT PAD ..... FS 7-91
EVA 3 NOTES, CAUTIONS, AND WARNINGS ..... FS 7-93
EVA 3 TOOL CONFIG ..... FS 7-98
EVA 3 EGRESS ..... FS 7-100
EVA 3 SETUP ..... FS 7-102
EVA 3 CETA CART RELOCATION ..... FS 7-103
EVA 3 SPDM COVERS ..... FS 7-108
EVA 3 LEE B REPAIR ..... FS 7-113
EVA 3 S1/S3 SSAS PANEL BBC RECONFIG ..... FS 7-122
EVA 3 S1/S3 FLUID QD JUMPER INSTALL ..... FS 7-123
EVA 3 S1 FHRC P-CLAMP RELEASE ..... FS 7-124
EVA 3 S0 1A_D RPCM REMOVE/REPLACE ..... FS 7-126
EVA 3 P1 1A_A RPCM REMOVE/REPLACE ..... FS 7-131
EVA 3 CLEANUP ..... FS 7-136
EVA 3 A/L INGRESS ..... FS 7-137
EVA 4
EVA 4 SUMMARY TIMELINE ..... FS 7-141
EVA 4 INHIBIT PAD ..... FS 7-142
EVA 4 NOTES, CAUTIONS, AND WARNINGS ..... FS 7-145
EVA 4 TOOL CONFIG ..... FS 7-150
EVA 4 A/L EGRESS ..... FS 7-152
EVA 4 S1/P1 RADIATOR IMAGING ..... FS 7-154

EVA 4 JLP GPS ANTENNA INSTALL ..... FS 7-156
EVA 4 Z1 PATCH PANEL..... FS 7-158
EVA 4 S3 TASK SETUP..... FS 7-159
EVA 4 CP1 WETA INSTALL..... FS 7-160
EVA 4 S3 OUTBOARD NADIR PAS DEPLOY ..... FS 7-164
EVA 4 S3 INBOARD ZENITH PAS DEPLOY ..... FS 7-168
EVA 4 CLEANUP/INGRESS..... FS 7-175
GET-AHEADS
S3 INBOARD NADIR PAS DEPLOY ..... FS 7-179
CONNECTOR INSULATING SLEEVE – CHANNEL 1/4 (S0) ..... FS 7-183
CONNECTOR INSULATING SLEEVE – MBS ..... FS 7-184
CONNECTOR INSULATING SLEEVE – SSPTS (NODE 1 FWD) ..... FS 7-185
CONNECTOR INSULATING SLEEVE – SSPTS (LAB FWD)..... FS 7-186
CONNECTOR INSULATING SLEEVE – SSPTS (PMA2 PORT) ..... FS 7-187
CONNECTOR INSULATING SLEEVE – SSPTS (PMA2 STBD)..... FS 7-188

119 (15A) EVA OV BASELINE

00:00 | 01:00 | 02:00 | 03:00 | 04:00 | 05:00 | 06:00 | 07:00

EVA 1

Egr	Setup	Attach S6 to S5	Connect S5 to S6 Umbilicals	PVR Cinches & Winch Release	Keel Pin	BGA Release	Unstow Nadir (1B) SABB	SSU ECU MLI	Cleanup	Ing
Egr	Setup	Attach S6 to S5	Connect S5 to S6 Umbilicals	Release SABB Restraints			Unstow Zenith (3B) SABB	SSU ECU MLI	Cleanup	Ing

EVA 2

Egr	Setup	P6 Battery Prep	P3 Nadir UCCAS	P1 RBVM MLI	P1 FHRC P-Clamps	S3 Outboard/Zenith PAS	Tool Stanchion Relocate	Cleanup	Ing
Egr	Setup	P6 Battery Prep	P3 Nadir UCCAS	P1/P3 Fluid Jumper	P1 FHRC P-Clamps	S3 Outboard/Zenith PAS	APFR Retrieve	Cleanup	Ing

EVA 3

Egr	Setup	CETA Cart Relocation	SPDM Covers	LEE B Repair		Cleanup	Ing
Egr	Setup	CETA Cart Relocation	S1 Tasks	S0 1A_D RPCM	P1 1A_D RPCM	Clea nup	Ing

EVA 4

Egr	Set-up	JLP GPS Antenna B Install	Z1 Patch Panel	S3 Task Setup	CP1 WETA Install	S3 Outboard/Nadir PAS	S3 Inboard/Zenith PAS	Cleanup	Ing
Egr	Set-up	S1/P1 Radiator Imaging		S3 Task Setup	CP1 WETA Install	S3 Outboard/Nadir PAS	S3 Inboard/Zenith PAS	Cleanup	Ing

119 (15A) EVA OV BASELINE (Cont)

Get-Aheads	Applicable EVAs:				Constraints:	Completed On:
	EVA 1	EVA 2	EVA 3	EVA 4		
S6 MMOD Shield Bolt Torque Release	X				Stbd SARJ locked	
Nadir/Inboard PAS Deploy		X	X	X	Stbd TRRJ & SARJ locked	
Return Adj Tether to Port Z1 TB	X	X	X	X	None	
Grounding Sleeve Install:						
SSPTS Node 1 FWD		X	X	X	Inhibits: RPCM Z1 3B_A2 and Z1 4B_A2	
SSPTS Lab FWD		X	X	X		
SSPTS PMA2 Port		X	X	X	Inhibits: RPCM LA 1A4A-D3 and Z1 4B_A2	
SSPTS PMA2 Starboard		X	X	X	Inhibits: RPCM LA 2A3B-D1 and Z1 3B_A2	
MBS Cables		X	X	X	For WS4: RPC S0 4B_A1 and S0 3A_A1	
Channel 1/4 CR 8018 Cable (W4148)			X		DDCU S0 1A; MT is over Bay 0 if access is through Face 1 then task not possible	

EVA 1 SUMMARY TIMELINE

PET HR : MIN	IV/SSRMS	EV1 – Swanson	EV2 – Arnold	PET HR : MIN
00:00	SSRMS: S6 Pre-Install setup	**EVA 1 POST DEPRESS, EGRESS & SETUP (00:50)** • Post Depress/Egress (00:20) • Setup (00:30) • Translate to S5 (retrieve APFR from CETA cart) • Install APFR in S5 WIF 11	**EVA 1 POST DEPRESS, EGRESS & SETUP (00:50)** • Post Depress/Egress (00:20) • Setup (00:30) • Translate to S5 • Temp stow crewlock bag on S5	00:00
	SSRMS: S6 Pre-install Position			
01:00	SSRMS: GCA to first contact SSRMS: Limp after initial CLA contact	**ATTACH S6 to S5 (01:05)** • RTAS Bolt 1 & 2 Check at 150 cm • GCA at 30 cm • GCA at 15 cm • GCA to first contact • Verify Impending CLA contact • Bolt initial torque • Bolt 1 and 3 final torque	**ATTACH S6 to S5 (01:05)** • RTAS Bolt 3 & 4 Check at 150 cm • GCA at 30 cm • GCA at 15 cm • GCA to first contact • Drive CLA • Ground strap install • Bolt 2 and 4 final torque • Release CLA	01:00
02:00	√**MCC-H** GO for S5 to S6 umbilicals √**MCC-H** in CMG Control	**CONNECT S5 to S6 UMBILICALS (00:55)** • Connect umbilicals (4) • Move APFR to S6	**CONNECT S5 to S6 UMBILICALS (00:55)** • Connect umbilicals (assist EV1)	02:00
03:00	SSRMS: S6 ungrapple	**PVR CINCHES AND WINCH RELEASE (00:45)** • Release cinches (6) • Release winch PIP pin (2)	**RELEASE SABB RESTRAINTS (01:35)** • Release Nadir/Inboard SABB • Release Nadir/Outboard SABB • Release Zenith/Inboard SABB • Release Zenith/Outboard SABB	03:00
		KEEL PIN ROTATION (00:15)		
04:00		**BGA RELEASE (00:30)** • Release TA Clamps, Zenith BGA Bolts (00:15) • Release TA Clamps, Nadir BGA Bolts (00:15)		04:00
		UNSTOW NADIR (1B) SABB (01:00) • Deploy Nadir SABB Wing • Release Mast Tip Fasteners	**UNSTOW ZENITH (3B) SABB (01:00)** • Deploy Zenith SABB Wing • Release Mast Tip Fasteners	
05:00				05:00
		SSU AND ECU COVER REMOVAL (00:10) **CLEANUP AND A/L INGRESS (00:55)**	**SSU AND ECU COVER REMOVAL (00:10)** **CLEANUP AND A/L INGRESS (00:55)**	
06:00		**PRE-REPRESS (00:05)**	**PRE-REPRESS (00:05)**	06:00
	EVA 1 PET = 06:30 hr			

EVA 1 INHIBIT PAD

Orbiter

ALL EVAs

TCS
L12 1. √TCS POWER – OFF

KU-BAND ANTENNA
{Performed during egress}
MCC-H 1. √KU-BAND Mask – active
2. √KU-BAND EVA Protect Box – active

Ground

ALL EVAs

Ground Radar
MCC-H 1. √TOPO console, ground radar restrictions in place of EVA

USOS (1)

ALL EVAs

PCU

NOTE
PCUs may require up to a 1-hr warmup period before they are operational

MCC-H 1. √PCUs (two) operational in discharge mode and one of the following:
a. CCS PCU EVA hazard control FDIR enabled
b. No more than two arrays unshunted and oriented < 105º from velocity vector

If one or both PCUs failed
2. No more than two arrays unshunted and oriented < 105º from velocity vector

EuTEF
COL-CC Verify PLEGPay Power Status (ETF_PLEGPAY_Pwr_Stat) – OFF

LOCATION DEPENDENT INHIBITS

Lab Window
{On call, EV crew not expected to be in this area}
IV If EV crew less than 10 ft from window or in window FOV, close window shutter

KU-Band (SGANT) Antenna
{On call, EV crew not expected to be in this area}
MCC-H If EV crew < 3.3 ft from KU-BAND antenna
1. Park KU-BAND:
1.1 Pointing Mode – Inhibit
1.2 PLC – Reset
1.3 Autotrack Continuous Retry – Inhibit

Mobile Transporter
MCC-H 1. √MT latched

EVA 1 INHIBIT PAD (Cont)

USOS (2)

EVA 1 SPECIFIC INHIBITS

S6 TO S5 MATE
{Expect inhibits in place prior to egress}

MCC-H
1. MBSU 1 RBI 8 – Open, Close Cmd Inhibit
2. MBSU 3 RBI 8 – Open, Close Cmd Inhibit

MCC-H For EV crew working outboard of starboard SARJ:
Lock starboard SARJ at 110 deg and port SARJ at desired angle:
1. √DLA (1) – LOCKED
2. All motor set points set to zero
3. All motors deselected

OR

4. Both DLAs – LOCKED

STBD TRRJ
MCC-H
1. √DLA (1) – LOCKED

RSOS (1)

ALL EVAs

SM Antennas
IV
1. GTS – Deactivate
2. ARISS (Ham Radio) – Deactivate or VHF (144-146 MHz) TX only

USOS (3)

EVA LOCATION DEPENDENT INHIBITS

S-Band (SASA) Antennas
{On call, EV crew not expected to be in this area}
MCC-H If EV crew < 3.6 ft from S1 SASA [P1 SASA]
1. P1 SASA (S1 SASA) – Active
2. S1 SASA [P1 SASA] – Powered down

FPMU
{On call, EV crew not expected to be in this area}
MCC-H If EV crew working within 5 ft of Floating Potential Measurement Unit
1. FPMU power – Off

SSPTS
{On call, EV crew not expected to be in this area}
MCC-H If EV crew working within 2 ft of SSPTS cables
1. RPCM LA1A4A D RPC 3 – Open, Close Cmd Inhibit
2. RPCM LA2A3B D RPC 1 – Open, Close Cmd Inhibit
3. RPCM Z14B A RPC 2 – Open, Close Cmd Inhibit
4. RPCM Z13B A RPC 2 – Open, Close Cmd Inhibit

BGA
MCC-H S4 BGAs will be locked at the following angles:
*1. 1A Solar Array – +125 thru +230 deg
2. 3A Solar Array – +270 deg

*Pre-flight analysis determined any angle in this range is compatible with Phalcon, ROBO and EVA operations

EVA 1 NOTES, CAUTIONS, AND WARNINGS

NOTES

1. Bolt install: Report torque and turns
   Bolt release: Report torque and turns
   (if different from published range)

2. EVA connectors: After dis-connection and prior to connection; verify pin and EMI band integrity. Verify connector free of FOD

3. Inspect Fluid QDs for damage, prior to mating

4. Toolbox doors must be closed with one latch per door, when EV crew not in immediate vicinity

5. Avoid contact with OBSS striker bars (Vitrolube coating)

CAUTION

ISS Constraints

A. Avoid inadvertent contact with
   1. Grapple fixture shafts (drylube)
   2. PIP pins
   3. EVA Crane [PMA1]
   4. TCS Reflectors [PMA2,PMA3]
   5. APAS hardware [PMA2,PMA3]
   6. CETA Lights (Z-93 paint) [LAB,S1,Node 1]
   7. Deployed MISSEs [Columbus EPF]
   8. Passive UMAs
   9. MBS/SSRMS/SPDM/JEMRMS taped radiative surfaces: VDU, ACU, JEU, LEU, MCU, CRPCMs, and Cameras
   10. Deployed TUS cable [Nadir CETA rail]
   11. S0 aft face Radiator
   12. GPS Antennas (S13 paint) [S0,JLP]
   13. UHF Antennas [LAB,P1]
   14. ETCS Radiator flexhoses and panels [S1,P1]
   15. EETCS/PV Radiator flexhoses, bellows and panels [P6,P4,S4,S6]
   16. SASA RF Group [S1,P1]
   17. Heat pipe radiators [Z1]
   18. PCU cathode and HCA ports [Z1]
   19. Ku-Band Antenna (SGANT) dish [Z1]
   20. CMG cover/shells [Z1]
   21. SPDM SJEU, EP, OTCM, LEU, and LEE VDU Radiator surfaces
   22. Open CBM petal covers, LAB window shutter, and JPM window shutter
   23. FPMU [S1]
   24. OTSD
   25. COL HAM radio antennas [COL-Nadir]
   26. JTVE Cameras [JEM]
   27. JEM A/L Target and Pins
   28. S0/Node 2 Fluid Tray Hardlines at Node 2 end are limited to 25 lb

CAUTION (Cont)

ISS Constraints (Cont)

B. Electrical cables
   1. Avoid bend radii < 10 times cable diameter

C. Fiber optic cables
   1. Avoid bend radii < 10 times cable diameter
   2. Avoid pulling on cable during mate/demate

D. Fluid line flex hoses and QDs
   1. Avoid bend radii < 5 in for hoses with diameter < 1 in on LAB, S0, S1, P1, and 10-in for hoses with diameter < 1 in on all other elements
   2. Avoid bend radii < 14 in for hoses with a diameter ≥ 1 in
   3. Additional care should be taken to not exceed bend radii when applying loads at the flexible hose to rigid tube stub interfaces
   4. Ensure fluid QD booties are fully closed prior to leaving worksite; wire tie if reqd

E. For structural reasons
   1. Avoid vigorous body motions, quick grabs and kickoffs against tether restraints
   2. Avoid performing shaking motions (sinusoidal functions) more than four cycles
   3. Avoid kicking S1/P1 radiator beam
      If any of these occur, wait 2 to 5 min to allow structural response to dissipate

EVA 1 NOTES, CAUTIONS, AND WARNINGS (Cont)

CAUTION (Cont)

ISS Constraints (Cont)

F. Other
1. ITT Cannon connector: On demated connectors, do not rotate collar or manipulate cable/connector using collar or connector tool
2. WIS Antennas: Do not use as handholds [Node 1,P6,Z1]
3. Lubricant from Ku-Band SGANT gimbals [Z1], CMGs [Z1], and RTAS Ground Strap fasteners [P6,P4,S4] can contaminate EMU
4. MLI handholds are not rated for crewmember translation loads
5. CBM petal covers may not be used as handholds unless both launch restraint pins are engaged
6. Prevent inadvertent contact of the tether shuttle with ETRS when the P3/S3 Tether Shuttle Stop is raised away from the rail

CAUTION (Cont)

Shuttle Constraints

A. Avoid inadvertent contact with
1. OBSS and SRMS Composite Sections, Joint Torque Arms, Grapple Fixture Shafts, and Cable Harnesses
2. LCS (silver Teflon) and LDRI (silver Teflon) and ITVC (gold foil) [OBSS]
3. WVS Antenna [ODS Truss & PLB Sill]
4. Payload Bay and Camera wire harnesses, cables, cable guides, and connectors

B. No touch
1. LDRI diffuser [OBSS]
2. OBSS saddle contacts (when OBSS unberthed) [OBSS]
3. Monkey fur [PLB]
4. Cameras: Metallic surfaces [PLB]
5. Ku-Band Antenna black dish and gold thermal blankets [PLB]

EVA 1 NOTES, CAUTIONS, AND WARNINGS (Cont)

WARNING

ISS Constraints

A. Avoid inadvertent contact with
1. Grapple fixture targets and target pins
2. SSU, ECU, beta gimbal platform, mast canister, SAW blanket boxes unless the beta gimbal is locked and the motor is turned off
3. Stay inboard of SARJ when active
4. Stay 2 ft from S1/P1 radiator beam rotational envelope when beam is free to rotate
5. Stay 5 ft from moving MT on face 1
6. SOLAR and EuTEF [COL EPF]

B. Handrails
1. Handrails previously used for MISSE attachment may not be used as a safety tether point [A/L endcone 564 & 566, A/L Tank 2 nad/fwd & port/fwd, P6 5389]

C. Pinch
1. NZGL connector linkage. Use caution when mating/locking
2. ITT Cannon Connector rotating housing
3. EV side of IV Hatch during Hatch operation (also snag hazard) [A/L]
4. LAB window shutter and CBM petal cover and JPM window shutter linkages during operation
5. JEMRMS HRM capture latches
6. JEM Cameras (JTVEs, EVE, WVE)
7. JEM EFBM capture latches

D. QDs
1. If QD is in FID when valve is opened (bail fwd), QD will leak and fluid line may whip
2. Do not rotate if in mated/valve open config

WARNING (Cont)

ISS Constraints (Cont)

E. RF radiation exposure
1. Stay 3.6 ft from S-Band (SASA) high gain Antenna when powered [S1,P1]
2. Stay 1.3 ft from S-Band (SASA) low gain Antenna when powered [S1,P1]
3. Stay 1 ft from UHF Antenna when powered [LAB,P1]
4. Stay 0.3 ft from fwd/aft JPM PROX antenna

F. Sharp Edges
1. Inner edges of WIF sockets
2. APFR active WIF probes
3. Mating surfaces of EVA connectors Avoid side loads during connector mating
4. Back side of MMOD shield fasteners
5. Spring loaded captive EVA fasteners (e.g., 6B-boxes, BMRRM, RTAS, SARJ Covers); the end of the spring may protrude
6. PMA umbilical launch restraints-exposed bolt threads
7. Adjustable Fuse Tether (Fish Stringer) buckles stowed in Node Bag
8. Nickel coated braided copper Ground Straps may contain frayed wires [P6,P4,S4,S6]
9. SPDM OTCM gripper jaws

WARNING (Cont)

ISS Constraints (Cont)

F. Sharp Edges (Cont)
10. Solar Array Blanket Box [P6,S6]
11. Keep hands away from SSRMS LEE/POA/SPDM LEE/JEMRMS EE opening, snares, and PDGF curvic coupling (teeth)
12. Fastener threads on back of Z1 U-jumper male FQD panel, if nutplate cap missing
13. Outboard MT rail attachment lug near P6 handrail 5333 and gap spanner
14. P2 connector on EWIS box TAA-06 [Zenith/Forward Corner 1 of P5 – SARJ at 0 deg]
15. Port/Aft portion of A/L circular HR [HR 0506]
16. Interior of JEMRMS HRMs
17. JEM A/L hatch corners

G. Thermal
1. EVA connectors with booties may become hot if left uncovered. Handling may need to be limited
2. PMA handrails may be hot. Handling may need to be limited
3. Turn off glove heaters when comfortable temp reached to prevent bladder damage. Do not pull fingers out of gloves when heaters are on
4. Uncovered trunnion pins may be hot
5. SSRMS/MBS/SPDM/JEMRMS/JTV operating cameras and lights may radiate large amounts of heat

WARNING (Cont)

ISS Constraints (Cont)

G. Thermal (Cont)

6. Stay ≥ 1 ft away from PMAs and MMOD shields > 270 degF if EMU sun visor up; limit time to 15 min or less if > 300 degF
7. Stay at least 0.5 ft away from PMA and MMOD shields > 325 degF
8. Do not touch EMU protective visor if temp has been < -134 degF for > 15 min
9. No EMU TMG contact with PMAs and MMOD shields > 320 degF
10. No EMU boot contact with foot restraint when temp < -120 degF or > 200 degF
11. Columbus end cones may violate touch temperature constraints when $-75 \leq \beta \leq -60$ or $60 \leq \beta \leq 75$
12. PDGF surfaces may not meet touch temperature requirements for unlimited contact when $\beta \leq -70$ or $\beta \geq 70$
13. JPM port end cones and JLP port nadir may violate touch temperature constraints when $\beta > 60$ deg

WARNING (Cont)

ISS Constraints (Cont)

H. Electrical Shock

1. Stay ≥ 2 ft from ungrounded floating connectors if not unpowered
   - SSPTS connectors include NOD1 Stbd/Fwd HR 0130, Lab Stbd/Fwd HR 0273, PMA2 Stbd and Port
   - MBS Cross-Connect jumpers (translate past these using UMA handrails) Include S0 EVA Power Cables (inside S0 Bay 00 Face 4, Bay 01 Face 3) ESP2 jumper (inside S0 Bay 03 Face 4)
2. Do not touch SPDM CLPA 1 electrical connector prior to camera installation

WARNING (Cont)

Shuttle Constraints

A. Arcing/Molten Debris

1. Stay ≥ 2 ft from exposed EFGF connector when OBSS berthed, powered, and EFGF not grappled [PLB]
2. Stay ≥ 2 ft from exposed Stbd Fwd MPM contacts [PLB]
3. Stay above PLB sill when within 1 ft of powered ROEU connector [PLB]

B. Pinch

1. PRLA operation [PLB]

C. RF radiation exposure

1. Stay 3.28 ft from S-Band Antenna when powered
2. Stay 1 ft from top and side of UHF PLB Antenna radome surface when in high powered mode [ODS truss]
3. Stay 0.33 ft from top and side of UHF PLB Antenna radome surface when in low powered mode [ODS truss]
4. Remain below the level of the PLB door mold line for first 20 in Aft of Fwd bulkhead when S-Band Antenna powered [PLB]
5. Remain on the inboard side of the Stbd slidewire (sill handrails if slidewire not installed) for first 20 ft Aft of Fwd bulkhead when Ku-Band Antenna powered [PLB]

EVA 1 NOTES, CAUTIONS, AND WARNINGS (Cont)

WARNING (Cont)

Shuttle Constraints (Cont)

D. Sharp Edges
1. PRLA grounding wipers [PLB]
2. LDRI baffles (also an entrapment hazard) [OBSS]
3. Keep hands away from SRMS EE opening and snares
4. TCS connector backshells have exposed threads [ODS]

E. Thermal
1. Illuminated PLB lights; do not touch
2. OBSS grapple fixture shafts/cams may be hot. Limit handling if required
3. Stay 27 ft from PRCS when powered
4. Stay 3 ft from VRCS when powered
5. Stay 3 ft from APU when operating

F. Contamination
1. Stay out of the immediate vicinity of leaking jet or APU

G. Lasers
1. Do not look at LDRI diffuser or LCS laser aperture window

EVA 1 TOOL CONFIG (00:30)

EV1

EMU D-rings

- ❑❑ 2 – D-ring Tether Extenders
- ❑❑ 1 – Waist Tethers [right D-ring extender]
- ❑❑ 1 – 85-ft Safety Tether [right D-ring extender]

MWS

- ❑❑ Small trash bag [right inside]
- ❑❑ 1 – Adj tether
- ❑❑ 1 – RET (sm-sm) [left]
- ❑❑ 1 – 5/8-7.8-in socket ext
  - ❑❑ 1 – RET w/PIP pin
- ❑❑ 2 – Wire ties
- ❑❑ Swing Arm [right side]
  - ❑❑ PGT (no socket installed) s/n _____
    - ❑❑ 1 – RET (sm-sm)
- ❑❑ BRT [left side]
  - ❑❑ 2 – Wire ties (short)
  - ❑❑ 1 – RET (sm-sm)

❑❑ SAFER

EV2

EMU D-rings

- ❑❑ 2 – D-ring Tether Extenders
- ❑❑ 1 – Waist Tethers [right D-ring extender]
- ❑❑ 1 – 85-ft Safety Tether [right D-ring extender]

MWS

- ❑❑ Small trash bag [right inside]
- ❑❑ 1 – RET (sm-sm) [left]
- ❑❑ 1 – RET(w/PIP pin) [right]
- ❑❑ 2 – Wire ties
- ❑❑ Swing Arm [right side]
  - ❑❑ PGT w/7/16-6-in wobble ext s/n _____
    - ❑❑ 1 – RET (sm-sm)
- ❑❑ BRT [left side]
  - ❑❑ 2 – Wire ties (short)
  - ❑❑ 1 – RET (sm-sm)

❑❑ SAFER

CREWLOCK

❑❑ RET (Lg-Sm) [between Crewlock Bag outside TP and Crewlock internal HR]

- ❑❑ Crewlock Bag #1
  - ❑❑ 2 – Adjustable Tethers to outside TPs [tethers used to secure Torque Wrench MLI Bag to outside of Crewlock Bag]
    - ❑❑ Torque Wrench (preset to 57 ft-lb) [int RET #1 to Torque Wrench handle]
      - ❑❑ Torque Wrench Bag
  - ❑❑ EV1 spare 85-ft ST [outside TPs]
  - ❑❑ EV2 spare 85-ft ST [outside TPs]
  - ❑❑ Ratchet Wrench [int RET #2]
    - ❑❑ 5/8-7.8-in extension
  - ❑❑ Socket Caddy [int RET #3]
    - ❑❑ 7/16-6-in wobble extension
    - ❑❑ 7/16-2-in rigid ext
  - ❑❑ Round TM w/5/8 Prd Socket [int RET #4]
  - ❑❑ Cannon connector tools (2)
    - ❑❑ 2 – RET (sm-sm) to int TPs
  - ❑❑ EVA Camera w/bracket & int RET
    - ❑❑ 1 – RET (sm-sm) to int TP
  - ❑❑ Adj tether on outside of bag (temp stow)

❑❑ Tether ext on A/L D-ring

NOTE: Prior to use, inspect the following hardware:

- ❑ RET cords for fraying
- ❑ Safety Tether & Waist Tether load alleviating straps: No red visible
- ❑ Sm Trash Bag: Bristle deformation/damage, after stowing tools in trash bag

Use Blue RETs only		(total)
RET Counts (blue group):	used	(ISS qty)
RETs (sm-sm)	= 10	(16)
RETs (PIP pin)	= 2	(5)
RETs (lg-sm)	= 1	(8)
Adj Eq Tethers	= 4	(10)
8 Adj (sm-sm) on ISS, 2 from STS		
D-ring Tether Extenders	= 5	(6)

Bag Color Key: 119 EVA Tools, Staging, Crewlock MWS Shuttle

EVA 1 TOOL CONFIG (00:30) (Cont)

CREWLOCK (Cont)

Staging Bag
- ❑❑ Fish Stringer #1
  - ❑❑ Wire Tie Caddy (hook #1)
    - ❑❑ 9 wire ties
  - ❑❑ Velcro/Tape Caddy (hook #2)
  - ❑❑ PGT (hook #3) s/n 1008
    - ❑❑ PGT Battery s/n _____
    - ❑❑ 7/16-in (wobble) Socket-6 ext
  - ❑❑ Vise Grips (hook #4)
  - ❑❑ Ratchet Wrench (hook #5)
    - ❑❑ 7/16-in (rigid) Socket-9 ext
  - ❑❑ Cheater Bar (hook #6)
  - ❑❑ Hammer (hook #7)
  - ❑❑ Spare 55-ft Safety Tether (to strap)
- ❑❑ Fish Stringer #2
  - ❑❑ Connector Cleaner Tool Kit (hook #1)
  - ❑❑ Pin Straightener Assy (hook #2)
  - ❑❑ Probe (hook #3)
  - ❑❑ Pry Bar (hook #4)
  - ❑❑ Needle Nose Pliers (hook #5)
  - ❑❑ Spare Torque Wrench w/bag (set @ 57 ft-lb) (hook #6)
  - ❑❑ Locking Strut Aid #1 s/n _____ (hook #7)
    - ❑❑ RET (between Locking Strut Aid TPs)
      - ❑❑ Locking Strut Aid #2 s/n _____
  - ❑❑ 2 Long-Duration Tie-Down Tethers (to strap)
  - ❑❑ MWS Key Strap Assy (on wire tie, to strap)

IV Bag
- ❑❑ 2 – Towels
- ❑❑ Contamination Detection Kit
- ❑❑ 2 – GP Caddy
  - ❑❑ 2 – Adjustable Thermal Mittens
- ❑❑ Socket Caddy (hatch cont) w/RET (sm-sm, blck)
  - ❑❑ 1/2-in Socket-8 ext
  - ❑❑ 7/16-in (wobble) Socket-6 ext (spare)
- ❑❑ 2 – DCM Plug (SAFER Hardmount)
- ❑❑ 2 – RET (sm-sm, black)

Mesh Bag #1 (119 EVA Tools)
- ❑ WIF Adapter
- ❑ 4 – EVA Wipes
- ❑ Ratchet Wrench
  - ❑ 7/16-in x 2 ext socket
- ❑ RCC Gap Gauge
- ❑ Gap Spanner (72-in)
- ❑ Sm Trash bag
- ❑ Grease Gun
  - ❑ EVA Wipe & WireTie
- ❑ Ziplock Bag w/grease gun caps
- ❑ 2 – Wire Ties (short)
- ❑ 2 – Wire Ties (long)
- ❑ BRS Pin Tool
  - ❑ BRS Pin Tool Sheath

Mesh Bag #2 Done Tools
Empty

Mesh Bag #3 Transfer to Shuttle
- ❑ Locking Strut Aids (2)

Crewlock Bag #2
- ❑ Round Scoop
  - ❑ RPCM s/n C326597

Crewlock Bag #3
- ❑ Ratchet Wrench
  - ❑ 7/16-in x 2 ext socket
- ❑ RET w/PIP pin
  - ❑ 7/16-in x 18 ext socket
- ❑ Gap Spanner 72 (2)
- ❑ Gap Spanner 45 (2)

Crewlock Bag #4
- ❑ Round Scoop
  - ❑ RPCM s/n C235299

❑ Review PGT ops
- Report "green light" (for torque down ops)
- Report torque and turns
- Expect LOTORQ fault msg, Fault LED and Red LED for bolt release ops

Medium ORU Bag
Empty

Medium ORU Bag
- ❑ Fish Stringer
  - ❑ JLP GPS Antenna

Small ORU Bag
Empty

❑ WETA

Bag Color Key: 119 EVA Tools, Staging, Crewlock MWS Shuttle

EVA 1 A/L EGRESS AND SETUP (00:50)

IV	EV1 – Swanson (FF)	EV2 – Arnold (FF)
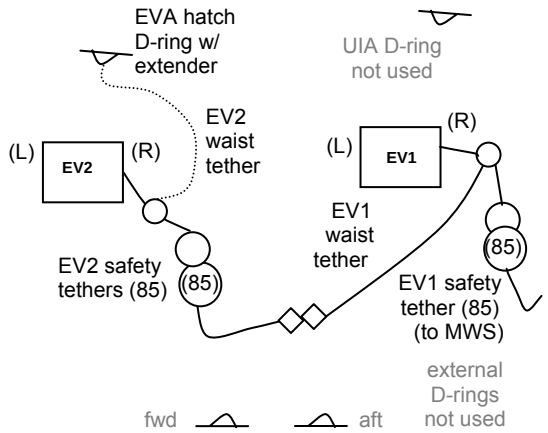 1 – 85-ft A/L tether – EV1 1 – 85-ft A/L tether – EV2 > EMU 1 – 85-ft TS tether – EV1 1 – 85-ft TS tether – EV2 > Crewlock Bag EVA PET = ____ : ____ Start Torque Wrench thermal clock (03:30 hr max): GMT = ____ : ____ : ____ 1. Post crew egress: WVS Software: Select page – RF Camera sel 'Advanced controls' S-Band level (two) – max	<u>INITIAL CONFIG</u> Verify: ❑ EV1 right waist tether connected to EV2's 85-ft safety tether ❑❑ √Gate closed (both hooks) ❑❑ √Hook locked (both hooks) ❑ √Safety Tether Reel unlocked <u>EGRESS</u> (00:20) 1. Open hatch thermal cover 2. Egress crewlock 3. Verify EV2 SAFER Configuration: ❑ √R Handle down (HCM door – Closed) ❑ √L Handle down (MAN ISO Valve – Open) 4. Translate to S1/S3 tether swap location (S1 nadir-forward, near CP3; fairlead safety tether forward of CETA Light) 5. Attach EV1 85-ft safety tether hook to S1 HR 3215 (position up and out of the way for EV2 translation) ❑ √Gate closed ❑ √Hook locked ❑ √Safety Tether Reel unlocked 6. Attach EV2 85-ft safety tether hook to S1 HR 3222 ❑ √Gate closed ❑ √Hook locked ❑ √Safety Tether Reel unlocked	<u>INITIAL CONFIG</u> Verify: ❑ EV2 right waist tether connected to Airlock D-ring extender ❑ √Gate closed ❑ √Hook locked <u>EGRESS</u> (00:20) 1. RET and attach Crewlock Bag to BRT 2. Egress crewlock (IV records GMT start of Torque Wrench thermal clock) 3. Verify EV1 SAFER Configuration: ❑ √R Handle down (HCM door – Closed) ❑ √L Handle down (MAN ISO Valve – Open)

EVA 1 A/L EGRESS AND SETUP (00:50) (Cont)

IV	EV1 – Swanson (FF)	EV2 – Arnold (FF)
NOTE Sunrise/Sunset checks • √Helmet lts, visor, as reqd • √Gloves, gauntlets • √Tool, MWS tethers • √MWS, BRT latches	EGRESS (00:30) (Cont) 7. Release EV1 waist tether from EV2 safety tether 8. Give EV2 GO to release EV2 waist tether from airlock D-ring	EGRESS (00:30) (Cont) 4. On EV1 GO, release right waist tether from airlock D-ring 5. Close hatch thermal cover 6. Perform translation adaptation, as reqd
	WARNING 2-ft Keep-Out Zone for floating cables between MT and MBS. Stay on UMA handrails during translation underneath MT	

EVA 1 A/L EGRESS AND SETUP (00:50) (Cont)

IV	EV1 – Swanson (FF)	EV2 – Arnold (FF)
	SETUP (00:30)	SETUP (00:30)
❑ IV verify with **MCC-H**: • All required EVA 1 inhibits are in place • 3A Solar Array @ +270 deg • 1A Solar Array @ +125 to +230 deg (provides clearance for EVA and ROBO ops)	WARNING Collision hazard. Stay inboard of the S5 stbd plane to avoid interference/contact w/S6 and SSRMS unless needed to work Ready to Mate Verification	
	1. Translate to CETA Cart #2 (outboard cart)	1. Translate to S5 safety tether swap location (EV1 anchored EV2 safety tether hook at S1 HR 3222)
	2. Retrieve APFR w/ingress aid from CETA Cart 2 WIF 01 (port-nadir corner): Pre-configure **APFR** [**QQ**,**C**,**11**] Before release, attach APFR to BRT RET	2. Temp stow Crewlock Bag at S5 HR 2122 – HR 2125 (located zenith-aft)
	3. Translate to S5 umbilical connector loc (S5 stbd-fwd)	3. Retrieve spare 85-ft safety tether, stow on MWS
	4. Release Utility Panel TA clamps on cables J159 and J160, as reqd (up to 6) ☐ ☐ ☐ ☐ ☐ ☐	4. Configure EVA camera on outside of Crewlock Bag
	5. Install APFR in S5 WIF 5 (near S5 HR 2117): **APFR** [**10**,**QQ**,**C**,**11**] ❑ √Blk-Blk, pull/twist test	5. Translate to S5 RTAS Bolt 3 location (zenith-aft) Verify S6 is at the 150 cm pre-install position
	6. Translate zenith to Crewlock Bag, stowed at S5 HR 2122 – HR 2125	6. Perform READY TO MATE VERIFICATION steps (5) on next page for **Bolt 3** (aft)
	7. Retrieve spare 85-ft safety tether, stow on MWS	
	8. Translate to S4/S5 tether swap location (near S5 HR 2102 – aft-nadir-middle HR)	7. Translate forward to S4/S5 tether swap location (near S5 HR 2108 – port-zenith-forward HR)
	9. Attach spare 85-ft safety tether to S5 HR 2114 Leave primary 85-ft safety tether at S5 HR 2107	8. Attach spare 85-ft safety tether to S5 HR 2116 Leave primary 85-ft safety tether at S4 HR 2116
	10. Perform Safety Tether swap. Verify tether config: ❑❑ √Gate closed ❑❑ √Hook locked ❑❑ √Safety Tether Reel unlocked	9. Perform Safety Tether swap. Verify tether config: ❑❑ √Gate closed ❑❑ √Hook locked ❑❑ √Safety Tether Reel unlocked
	11. Translate to S5 aft-nadir, Bolt 1 then Bolt 2 location (fairlead, as reqd)	10. Translate to S5 zenith-forward (RTAS Bolt 4)

EVA 1 ATTACH S6 TO S5 (01:05)

IV

Current S6 location: 150 cm stbd (away) from S5
(Pre-Install Setup Position)

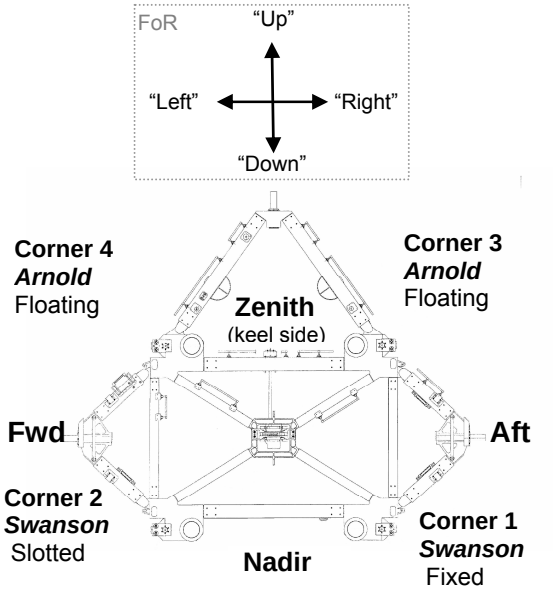

S6 Port End as Viewed from S5 Looking Starboard
(RTAS bolts are on the S5 side)

1. Notify M1 approaching S6 mate (on ICOM)
2. Obtain glove inspection report from EV1 and EV2

EV1 – Swanson (FF)

READY TO MATE VERIFICATION
1. Translate to **Corner 1** (may go to **Corner 2** first)
2. Verify S6 is at the 150 cm pre-install position
3. Perform **READY TO MATE VERIFICATION** steps (5) for **Bolts 1** and **2**:

READY TO MATE VERIFICATION	EV1		EV2	
	Bolt 1	**Bolt 2**	**Bolt 3**	**Bolt 4**
1. √S5 RTAS Primary bolt below fine alignment cone plane	❑	❑	❑	❑
2. √S5 RTAS 2-7 threads visible by bolt shoulder	❑	❑	❑	❑
3. √S6 RTAS Contingency ball/nuts (2) centered	❑	❑	❑	❑
4. √S5-S6 mating interface free of debris	❑	❑	❑	❑

4. Remain at **Corner 1**
5. EV1 perform glove/gauntlet inspection, report status

EV2 – Arnold (FF)

READY TO MATE VERIFICATION
1. Translate to **Corner 4**
2. Verify S6 is at the 150 cm pre-install position
3. Perform **READY TO MATE VERIFICATION** steps (5) for **Bolt 4:** (also perform for **Bolt 3**, if not done)

4. Remain at **Corner 4**
5. EV2 perform glove/gauntlet inspection, report status

IV	EV1 – Swanson (FF)	EV2 – Arnold (FF)
❑ √EV1, EV2 ready for mnvr from 150 cm to 30 cm position 3. Hand over comm. to M1/M2 for "Alignment 1" maneuver pre-brief	CLEARANCE AND ALIGNMENT VERIFICATIONS 1. Monitor clearances as required (S5 FRGF to S6) Install 5/8-7.8-in socket on PGT (stowed in trash bag) 2. Participate in M2 maneuver pre-brief, acknowledge items 3. Verify tools and tethers clear from S5/S6 interface Give M1/M2 GO to maneuver SSRMS to alignment position: 4. 30 cm position. Monitor motion and clearances. At 30 cm: Give M1/M2 alignment corrections, as reqd 5. 15 cm position. Monitor motion and clearances. At 15 cm: Give M1/M2 alignment corrections, as reqd 6. Give M1/M2 GO to maneuver to first contact. Monitor motion and clearances, and call at first contact. (If alignment correction needed, backout to 15 cm position. Monitor motion and clearances. Repeat step 6) 7. √All four alignment pins are within alignment cups	
NOTE Check periodically with EV2 for clearance between nadir-pointed S5 FRGF and S6. When SSRMS is in limp mode and EV2 is driving the CLA, M2 will report "good comm." at ~10 sec intervals. EV2 will stop driving the CLA immediately if he fails to receive the "good comm." report from M2 after 2 turns of the PGT (~12 sec), or if "Cease Drive" is called	ENGAGE S5 CAPTURE LATCH	ENGAGE S5 CAPTURE LATCH
	WARNING EV crewmembers must remain clear of S6/S5 mating interface. Pinch Hazard. Area between S6 and S5 must be clear prior to latch actuation to prevent crew injury	
❑ √M1 GO to drive CLA to point just prior to contact [SSRMS is in standby] (CLA drive interface access from zenith-stbd end of S5)	8. Position to monitor capture latch motion (plan is to make call, just prior to first contact)	6. BRT to S5 HR 2122, as reqd (head in first, for access to CLA drive) 7. Drive S5 CLA: **PGT**, 7/16-6-in ext: [**A6** 8.3 ft-lb,**CW2** 30 rpm, MTL **30.5**]; until EV1 call "CLA Impending Contact" (~20 turns) Turns: _____
4. Verify Topological capture with EV1 5. Give M1/M1 GO for Limp mode. ❑ √SSRMS in Limp mode 6. Give CLA closure Prebrief to indicate "All Stop" protocol 7. Give EV GO to drive CLA to hard stop	9. Prior to contact, report "CLA About To Touch" 10. Monitor CLA motion	On IV GO, confirming SSRMS is in Limp Mode 8. Drive S5 CLA: **PGT**, 7/16-6-in ext: [**A6** 8.3 ft-lb, **CW1** 10 rpm, MTL **30.5**]; to hard stop (~106 turns) Turns/Torque: Turns: _____ Torque: _____
NOTE Gap between all four S6 and S5 housing surfaces must be < 0.6 in prior to primary bolt driving	11. √Gap with small equip hook on corners 1 and 2 Corner 1 ❑ Corner 2 ❑	9. √Gap with small equip hook on corners 3 and 4 Corner 3 ❑ Corner 4 ❑

IV

NOTE
Gap between all four S6 and S5 housing surfaces must be < 0.478 inch after primary bolt seating

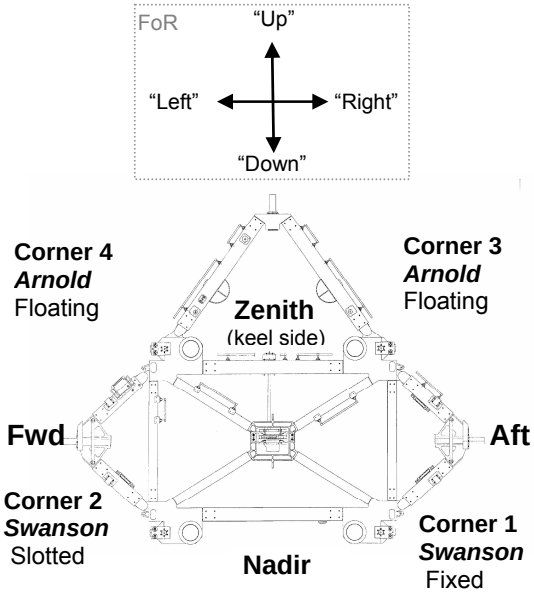

S6 Port End as Viewed from S5 Looking Starboard
(RTAS bolts are on the S5 side)

NOTE
Once 4 of 4 RTAS bolts are tightened to initial torque, EV1 and EV2 are GO for translation on S6 truss

EV1 – Swanson (FF)

RTAS BOLTS INITIAL TORQUE

CAUTION
Primary bolt hardware sensitive to crew loads. Do not apply a push force on the RTAS primary bolt. Damage to self feeding nut may result

NOTE
EV1: Bolt 1 must be fastened first, followed by Bolt 2. The order of Bolt 3 and 4 is not critical
EV1 & EV2: S6 is not approved for translation during bolting

1. ❑ Install 5/8-7.8-in socket on PGT (stowed in trash bag)

2. Drive **RTAS Bolt 1:**
   PGT, 5/8-7.8-in ext: [**B7** 25.5 ft-lb, **CW2** 30 rpm, MTL **30.5**], ~27 turns to hard stop
   ❑ √Bolt shoulder is seated against housing
3. Drive **RTAS Bolt 2:**
   PGT, 5/8-7.8-in ext: [**B7** 25.5 ft-lb, **CW2** 30 rpm, MTL **30.5**], ~27 turns to hard stop
   ❑ √Bolt shoulder is seated against housing
   (Fairlead safety tether inboard of APFR)
4. Drive **RTAS Bolts 4 and 3**:
   PGT, 5/8-7.8-in ext: [**B7** 25.5 ft-lb, **CW2** 30 rpm, MTL **30.5**]; ~27 turns to hard stop (reset PGT)
5. After Bolt 4 is driven:
   ❑ √Bolt shoulder is seated against housing
   (fairlead EV2 safety tether inboard of HR 2125)

Bolt Order	BRT HR	Turns	Torque	√Seated
Bolt 1 – aft/nadir	2126 2103			❑
Bolt 2 – fwd/nadir	2123 2140			❑
Bolt 4 – fwd/zenith	2131 2132			❑
Bolt 3 – aft/zenith	2138 2135			❑

EV2 – Arnold (FF)

RTAS GROUND STRAPS

CAUTION
Due to fault currents and EMI, 2 ground straps are required prior to activation, all 4 are required for activation

WARNING
Exposed braided wire on ground straps and protruding spring on ground strap bolt may present sharp edge hazard

1. Release **Corner 4** S6 Grounding Strap from S6:
   PGT, 7/16-6-in ext: [**B1** 12.0 ft-lb,**CCW2** 30 rpm, MTL **30.5**]; ~11-13.5 turns to release
2. Install **Corner 4** S6 Grounding Strap on S5:
   Start by hand (to avoid cross-threading), then:
   PGT, 7/16-6-in ext: [**A6** 8.3 ft-lb, **CW2** 30 rpm, MTL **30.5**]; ~6 turns to hard stop
3. Reset **PGT** [**B1** 12.0 ft-lb, **CCW2** 30 rpm]
   (for Grounding Strap Release)
4. Repeat steps 1 and 2 for **Corners 3, 1,** and **2**

Ground Strap Order	BRT HR	Turns	Torque
Corner 4 – fwd/zenith	2142		
Corner 3 – aft/zenith	2138 2135		
Corner 1 – aft/nadir	2103		
Corner 2 – fwd/nadir	2123 2140		

EVA 1 ATTACH S6 TO S5 (01:05) (Cont)

IV

Torque wrench out of bag GMT: ____ : ____

8. Give EV1 and EV2 GO for translation on S6 truss

Once all RTAS bolts (4) at final torque and verified tools and tethers clear, give SSRMS GO for S6 ungrapple

9. Obtain glove inspection report from EV1

Torque wrench re-stowed GMT: ____ : ____

EV1 – Swanson (FF)

6. Retrieve torque wrench from Crewlock Bag
7. Transfer 5/8-7.8-in ext from PGT to torque wrench

8. On IV call: EV1 has GO for translation on S6 truss

RTAS BOLT 3 AND 4 FINAL TORQUE

9. Torque RTAS **Bolts 3** and **4 (any order)**
   Torque Wrench, 5/8-7.8-in ext: 57 ft-lb cw, to torque
   √Gap with small equip hook

Bolt Order	BRT HR	*Turns to Torque	Gap Check
Bolt 3 – zenith/aft	2138 2135	_____ ❑	❑
Bolt 4 – zenith/fwd	2129 2131	_____ ❑	❑

*Turn count record reqd only when not ~27 turns to hard stop

10. Transfer torque wrench to EV2

11. Retrieve tools from Crewlock Bag and stow on MWS:
    - ❑ 7/16-6-in ext from socket caddy (for PVR)
      Install wobble socket on PGT
    - ❑ Canon Connector Tools (2)
      (Use MWS RETs on connector tools.
      Leave crewlock RETs on connector tool)

12. EV1 perform glove/gauntlet inspection, report status to IV
13. Translate to S5/S6 umbilical worksite (radiator side)

EV2 – Arnold (FF)

5. On IV call: EV2 has GO for translation on S6 truss

RTAS BOLT 2 AND 1 FINAL TORQUE

6. Receive torque wrench from EV1
   Attach torque wrench to left MWS RET
7. Torque **RTAS Bolts 2** and **1 (any order):**
   Torque Wrench, 5/8-7.8-in ext: 57 ft-lb cw, to torque
   √Gap with small equip hook

NOTE: Once 3 of 4 RTAS bolts at final torque, inform M1/M2 on RTAS bolt status

Bolt Order	BRT HR	Turns to Torque	Gap Check
Bolt 2 – nadir/fwd	2128 2140	_____ ❑	❑
Bolt 1 – nadir/aft	2126 2103	_____ ❑	❑

8. Translate to crewlock bag
9. Remove 5/8-7.8-in socket; stow in trash bag
10. Stow torque wrench in torque wrench bag on Crewlock Bag with RET

EVA 1 ATTACH S6 TO S5 (01:05) (Cont)

IV	EV1 – Swanson (FF)	EV2 – Arnold (FF)
10. Obtain glove inspection report from EV2		<u>RELEASE S5 CAPTURE LATCH PRE-LOAD</u> 1. Once all 4 RTAS bolts are torqued, drive S5 CLA: **PGT**, 7/16-6-in ext: [**A6** 8.3 ft-lb, **CCW3** 60 rpm, MTL **30.5**], ~60 turns 2. EV2 perform glove/gauntlet inspection, report status to IV 3. Translate to S5/S6 umbilical worksite (radiator side)

EVA 1 ATTACH S6 TO S5 – TASK DATA

Tools:

EV1 (FF)	EV2 (FF)
PGT	PGT
5/8-7.8-in ext	5/8-7.8-in ext
Torque Wrench	Torque Wrench
7/16-6-in ext	7/16-6-in ext

EVA Fasteners:

Fastener Name	Label	Head Size	Install Torque (ft-lb)	Release Torque (ft-lb)	Failure Torque (ft-lb)	Turns	RPM
S5 capture latch		7/16-in	3.3 (to close)	7.5 (to open)	14.6	126 – close 60 – open	60 initial, 30 – close 60 – open
S5 RTAS bolts (Initial)	1,2,3,4	5/8-in	w/RAD: 9.2 w/o RAD: 25.5	N/A	119.7	24 turns min, 36 turns max	30
S5 RTAS bolts (Final)	1,2,3,4	5/8-in	57	N/A	119.7	Until torque reached	N/A
S6 Grounding Strap	N/A	7/16-in	8.3	12.0	Inst: 11.8 Rel: 31.1	Inst: 5-8 Rel: 11-13.5	30
Gap Check Tool	N/A	7/16-in		8.3	12.2	12-14	30

EVA Connectors: None

Foot Restraints:

Task	WIF	APFR Setting	NOTE
Capture CLA drive	S5-09	4, SS, B, 11	
RTAS bolt 1	S5-04	5, LL, L, 9	
RTAS bolt 2	S5-05	8, PP, B, 1	APFR position is within sweep of SSU for beta angles 240-15 deg on S4 SA 3A; SSU – footplate is w/in inches of contact
RTAS bolt 3	S5-03	7, PP, A, 2	
RTAS bolt 4	S5-06	3, PP, K,12	

Cautions:

1. Primary bolt hardware sensitive to crew loads. Do not apply push force on bolt or damage to self feeding nut could occur
2. Due to fault currents and EMI, 2 ground straps are required prior to activation, all 4 are required for activation

Warnings:

1. Exposed braided wire on ground straps and protruding spring on ground strap bolt may present sharp edge hazard
2. EMU collision hazard. EV1 and EV2 must stay below the plane defined by S5/S6 interface until needed for verification of ready to latch condition
3. Pinch Hazard. Area between S6 and S5 must be clear prior to latch actuation to prevent crew injury

Notes:

RTAS GAP CHECK:
Minimum: 0.330 inches
Nominal: 0.406 inches
Maximum before primary bolt driving: 0.576 inches
Maximum after primary bolt seating: 0.478 inches
RET hook: 0.43 inches
7/16-6 in ext drop-proof tether end: 0.66 inches

1. Gap Check Tools (2) are located on S5 inboard and outboard Corner 1
2. Translation on S6 not permitted during bolting (however, no requirement on number of RTAS bolts for limited activities)

Thermal Constraints:

1. Torque wrench thermal clock: 3.5 hr

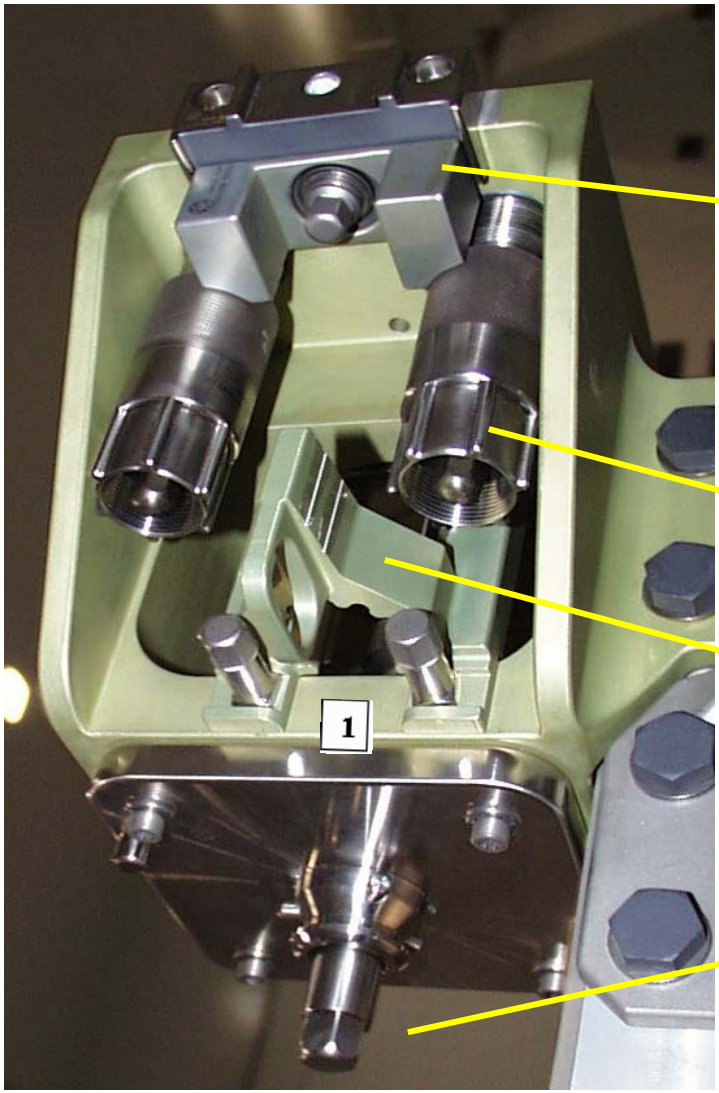
1

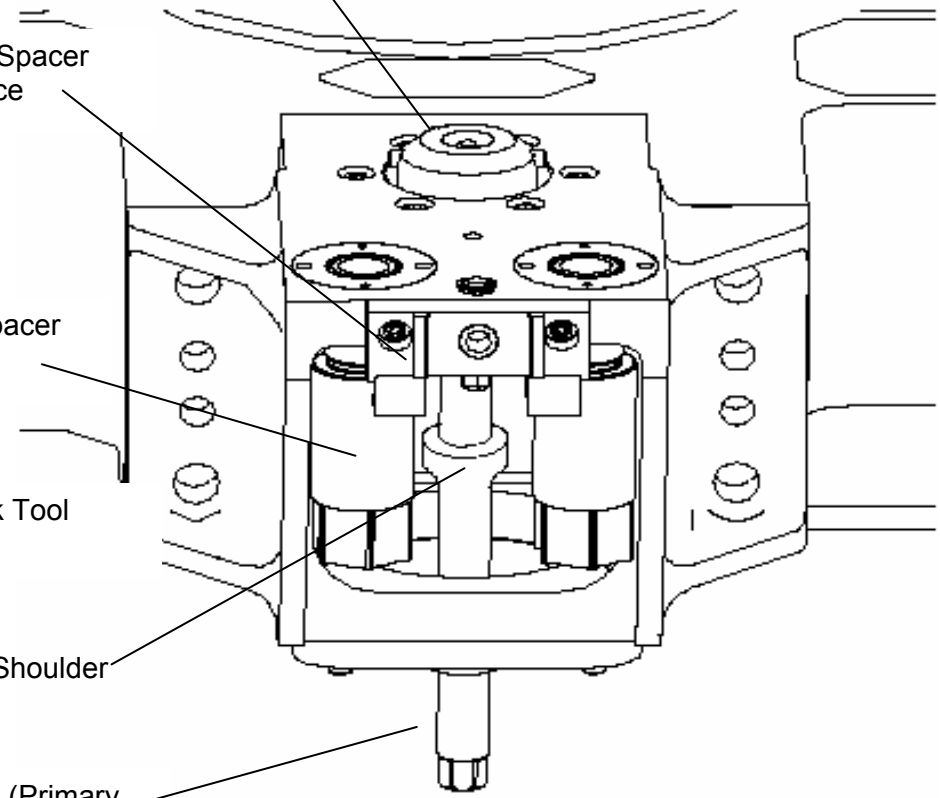
Fine Alignment Cone (Shear Cylinder)
Contingency Spacer Locking Device
Contingency Spacer Sleeve/Bolt
Gap Check Tool
Bolt Shoulder
RTAS Bolt (Primary Attachment Bolt)

RTAS S5 SIDE

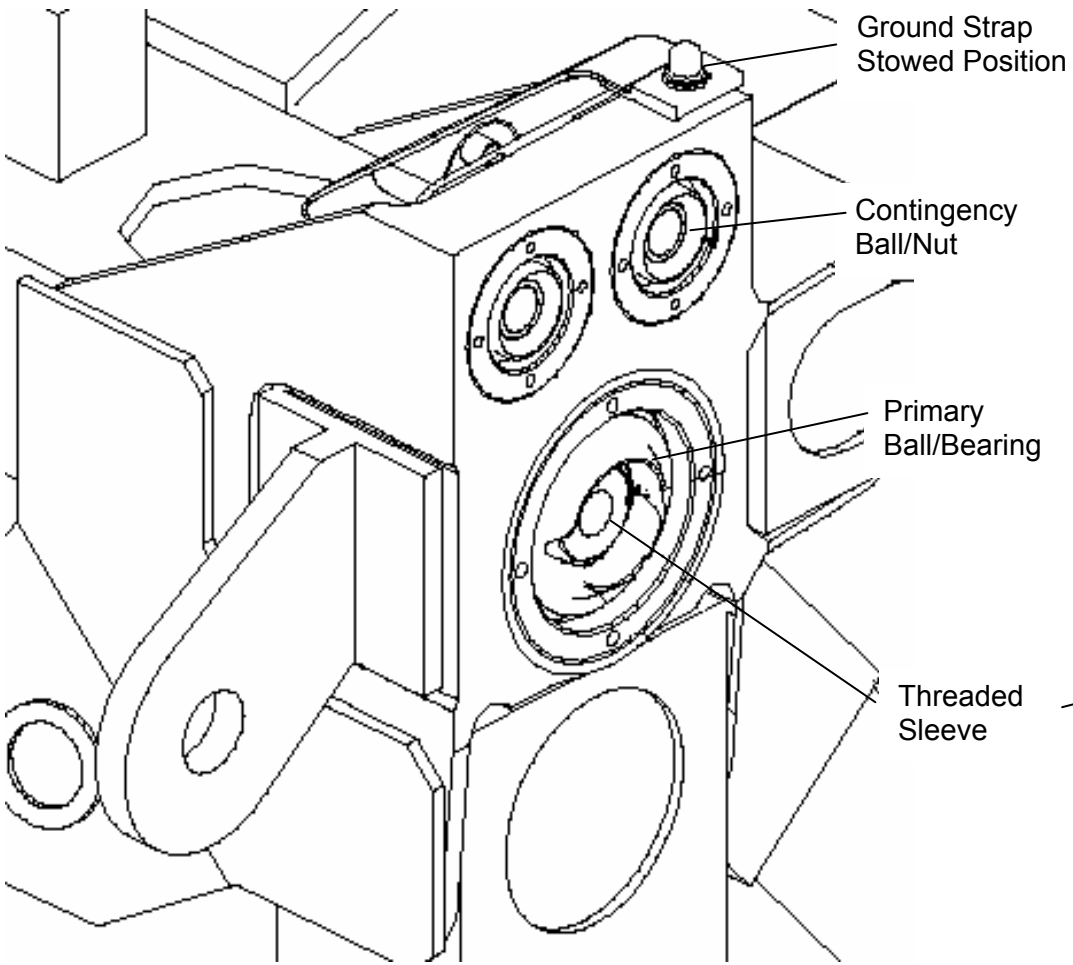
Ground Strap
Stowed Position
Contingency
Ball/Nut
Primary
Ball/Bearing
Threaded
Sleeve

RTAS S6 SIDE

EVA 1 CONNECT S5 TO S6 UMBILICALS (00:55)

IV	EV1 – Swanson (FF)	EV2 – Arnold (FF)
S6 TO S5 INHIBITS {see Task Data for reqd inhibits}	CONNECT S6 UMBILICALS 1. Stow cannon connector tools on HR 2140 and HR 2142 2. Open TA clamps (10): P253 (2) ❑ ❑, P254 (2) ❑ ❑, P259 (3) ❑ ❑ ❑, P260 (3) ❑ ❑ ❑	CONNECT S6 UMBILICALS 1. Assist EV1, as reqd
	NOTE √Connectors for straight pins, no FOD, EMI band intact, and good bend radius. RET to caps when both connector tools are in use, as reqd	
1. ❑ IV verify with **MCC-H** S5-S6 inhibits in place 2. Give EV GO for P253 demate	3. On IV GO, perform the following 1553 Bus A demate/mates and swap connector cap from S5 to S6 dummy connector:	

EV2 – Demate cap from S6	EV1 – Demate cable from S5	EV2 – Insp/Mate cable to S6	EV1 – Insp/Mate cap on S5
❑ S6 cap ←|→ S6 J153	❑ S5 P253 ←|→ S5 J153	❑ S5 P253 →|← S6 J153	❑ S6 cap →|← S5 J153

3. ❑ Notify **MCC-H** P253 mated to S6: Give **MCC-H** GO to reconfigure S6/S5 – 1553 buses to Bus A. Reconfiguration to Bus A must be completed prior to performing 1553 bus reconfiguration in EV1 step 7	4. Give IV/**MCC-H** GO for 1553 bus reconfiguration. Continue with power cap/connector demates:

EV2 – Demate cap from S6	EV1 – Demate cable from S5	EV1 – Insp and mate cable to S6
❑ S6 cap ←|→ S6 J160	❑ S5 P260 ←|→ S5 J160	❑ S5 P260 →|← S6 J160
EV2: Keep cap on tool		

	5. Ingress APFR, as reqd. Continue with power cap/connector swap:

EV2 – Demate cap from S6	EV1 – Demate cable from S5	EV1 – Insp/Mate cable to S6
❑ S6 cap ←|→ S6 J159	❑ S5 P259 ←|→ S5 J159	❑ S5 P259 →|← S6 J159
EV2: Keep cap on RET/tool		

4. ❑ IV verify with **MCC-H**, GO for P254 demate (EV1 step 7)	6. Mate connector caps (2) to S5 P260 ❑ and S5 P259 ❑
5. Give EV1 GO to demate P254	7. Egress APFR, as reqd. On IV GO, perform 1553 Bus B cap/connector swap:

EV2 – Demate cap from S6	EV1 – Demate cable from S5	EV2 – Insp/Mate cable to S6	EV1 – Insp/Mate cap on S5
❑ S6 cap ←|→ S6 J154	❑ S5 P254 ←|→ S5 J154	❑ S5 P254 →|← S6 J154	❑ S6 cap →|← S5 J154

6. ❑ Notify **MCC-H** P254 mated (Give GO for S6 activation)	8. Retrieve APFR 9. Stow APFR on BRT (preset **APFR** [**NN**,**E**,**1**])	2. Verify TA clamps closed, as reqd 3. Cleanup worksite. Retrieve connector tools (2)

EVA 1 CONNECT S5 TO S6 UMBILICALS (00:55) (Cont)

IV	EV1 – Swanson (FF)	EV2 – Arnold (FF)
	10. Translate to S6 Nadir SABB Inboard Restraint location 11. Install **APFR** [**9**,**NN**,**E**,**1**] in S6 WIF 27 12. Place RET on S6 HR 2061 to six-pack clamp 13. EV1 perform glove/gauntlet inspection, report status to IV	4. Translate to Crewlock Bag 5. Stow Cannon Connector Tools and EVA Camera in Crewlock Bag 6. Remove 7/16-6-in wobble from PGT and stow 6-in wobble on socket caddy 7. Retrieve Rd TM, stow on MWS 8. Attach Crewlock Bag to BRT 9. EV2 perform glove/gauntlet inspection, report status to IV
7. Obtain glove inspection report from EV1 8. Obtain glove inspection report from EV2		
	CAUTION Avoid imparting loads into cables under the S6 gap spanners	
9. After both EV1 & EV2 clear of S4 BGAs, gve **MCC-H** GO to rotate S4 BGAs	14. Translate to PVR worksite (fairlead safety tether, to minimize radiator contact)	10. Translate to S6 Nadir SABB Inboard Restraint

EVA 1 CONNECT S5 TO S6 UMBILICALS – TASK DATA

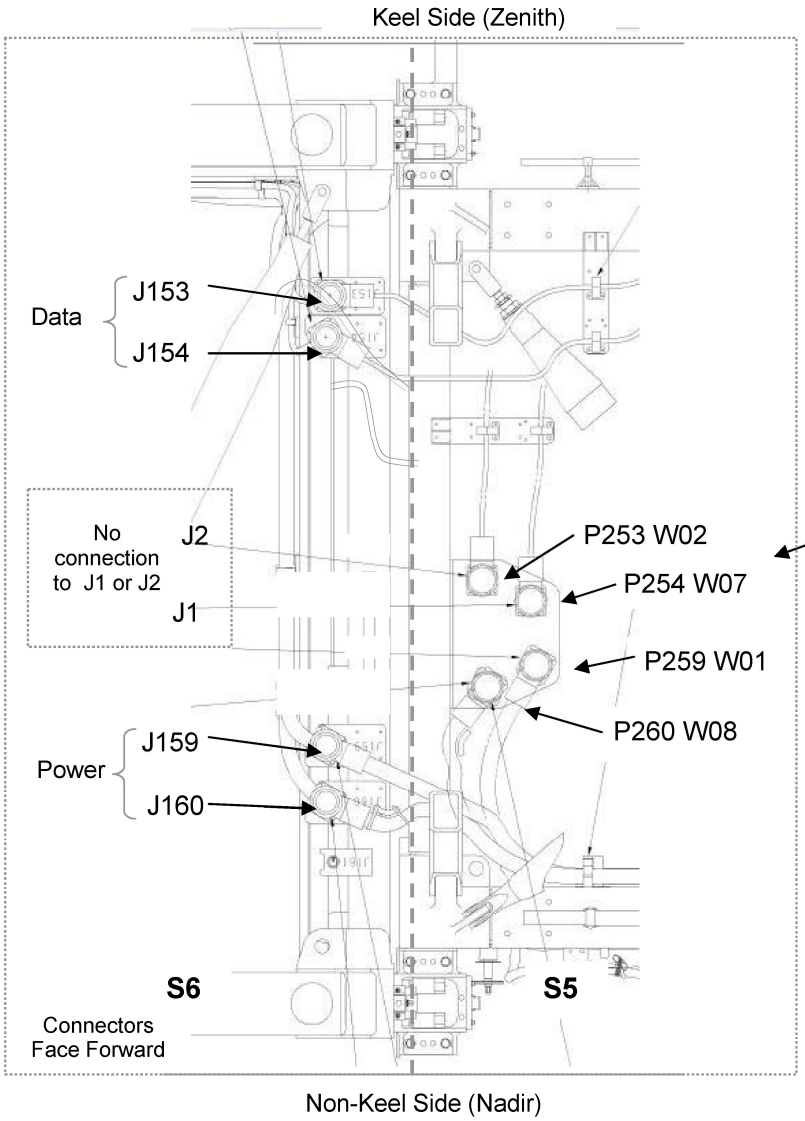

View of Umbilical Panels
Radiator Side (Forward Face)

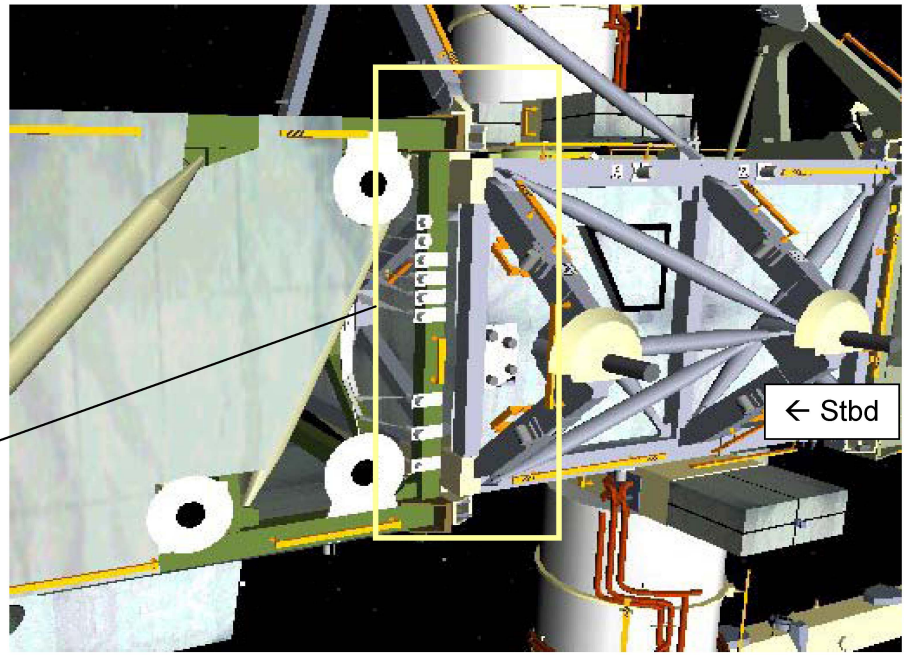

View Radiator (Fwd) Side

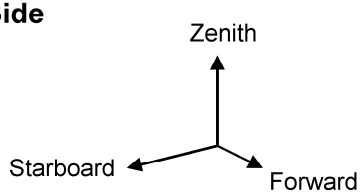

EVA 1 CONNECT S5 TO S6 UMBILICALS – TASK DATA (Cont)

Tools:

EV1 (FF)	EV2 (FF)
Cannon Connector tool	Cannon Connector tool
APFR	

EVA Fasteners: None

EVA Connectors:

Harness	From (S5)	To (S6)	Clamps	Size	Inhibit	Function
P253-W02	J153	J153 – sockets	1	37	N/A	1553 Bus A (Data)
P254-W07	J154	J154 – sockets	1	37	N/A	1553 Bus B (Data)
P259-W01	J159	J159 – sockets	4	37	MBSU 1 RBI 8 – Open, Close Cmd Inh	Power to/from Ch 1B
P260-W08	J160	J160 – sockets	4	37	MBSU 3 RBI 8 – Open, Close Cmd Inh	Power to/from Ch 3B

Foot Restraints:

Task	WIF	APFR Setting
Power connector mate	S5-05	10, QQ, C, 11
Data connector mate (optional)	S5-06	9, SS, A, 11

Cautions:

Warnings:

Timeline Considerations:

1. Due to cable interference, P260 must be demated from S5 prior to P259. P260 must also be mated to S6 prior to P259

Notes:

1. Tool interference exists on the S5 P260 connector
2. In order to prevent side-loads on connectors, will need to react cable stiffness

EVA 1 RELEASE SABB RESTRAINTS (01:35)

IV	EV2
Clam Shell Nadir Inboard Bolt Release Tracking 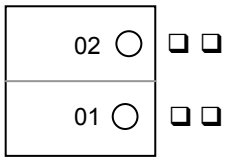 Six-Pack Nadir Outboard Bolt Release Tracking 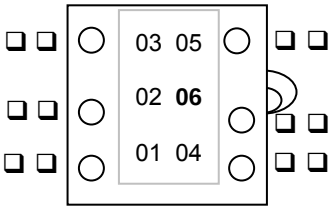 	**<u>RELEASE NADIR (NON-KEEL SIDE) SABB (1B) RESTRAINTS</u> (00:45)** 1. Temp stow Crewlock Bag on S6 HR 2040 (near WIF 19, non-keel/inboard corner) or HR 2028 (fairlead along truss to stay clear of SABBs) 2. **APFR:** S6 WIF 27 [**9,NN,E,1**] ❑ √Blk-Blk, pull/twist test 3. Ingress APFR <u>RELEASE NADIR INBOARD RESTRAINTS</u> 4. **PGT** [**B7** 25.5 ft-lb, **CCW2** 30 rpm, MTL **30.5**]-Rd TM with 5/8-in: √Anti-Backlash in Neutral: Break torque on Inboard SABB fasteners (2), ~5 turns 5. **PGT** [**B7** 25.5 ft-lb, **CCW2** 30 rpm, MTL **30.5**]-5/8-7.8-in socket ext: Release Inboard SABB fasteners (2), ~9 turns 6. Stow 5/8-7.8-in socket in trash bag 7. Egress APFR 8. Open clam shell hinge until detent engages <u>CAUTION</u> Unfasten jack bolt (#06) last <u>RELEASE NADIR OUTBOARD RESTRAINTS</u> 9. √Six-pack clamp secured to S6 HR 2061 w/RET 10. **APFR**: S6 WIF 27 [**2,NN,E,11**] ❑ √Blk-Blk, pull/twist test 11. Ingress APFR 12. **PGT** [**B7** 25.5 ft-lb, **CCW2** 30 rpm, MTL **30.5**]-Rd TM with 5/8-in socket: √Anti-Backlash Neutral: Break torque on Outboard SABB fasteners (6), ~5 turns each <u>WARNING</u> Sharp edge hazard. Avoid contact with exposed threads on jack bolt #06 after SABB six-pack shell restraint released 13. **PGT** [**B7** 25.5 ft-lb, **CCW2** 30 rpm, MTL **30.5**]**-5/8-7.8-in ext:** Release Outboard SABB fasteners (6), ~9 turns each 14. Temp stow six-pack clamp on S6 HR 2060 using RET 15. Temp stow 5/8-7.8-in socket in trash bag 16. Egress APFR 17. Retrieve APFR [**NN**,**E**,**1**], stow on BRT 18. Translate to ZENITH (Keel Side) INBOARD RESTRAINTS location (translate inboard)

IV	EV2
Clam Shell Zenith Inboard Bolt Release Tracking 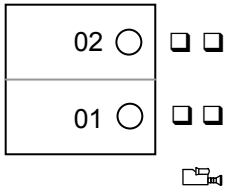 Six-Pack Zenith Outboard Bolt Release Tracking 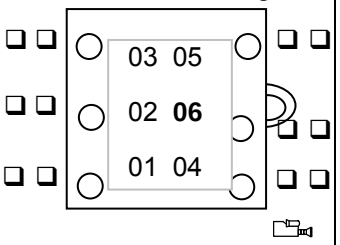 	**<u>RELEASE ZENITH (KEEL SIDE) SABB (3B) RESTRAINTS</u> (00:45)** 1. **APFR** S6 WIF 25 [**9,NN,E,1**] ❑ √Blk-Blk, pull/twist test 2. Ingress APFR <u>RELEASE ZENITH INBOARD RESTRAINTS</u> 3. **PGT** [**B7** 25.5 ft-lb, **CCW2** 30 rpm, MTL **30.5**]-RAD, TM with 5/8-in socket: Anti-Backlash in Neutral: Break torque on Inboard SABB fasteners (2), ~5 turn 4. **PGT** [**B7** 25.5 ft-lb, **CCW2** 30 rpm, MTL **30.5]**-5/8-in socket 7.8-ext: Release Inboard SABB fasteners (2), ~9 turns 5. Stow 5/8-7.8-in socket in trash bag. Egress APFR. Open clam shell hinge until detent engages <u>CAUTION</u> Unfasten jack bolt (#06) last <u>RELEASE ZENITH OUTBOARD RESTRAINTS</u> 6. √Six-pack clamp to secured S6 HR 2072 or HR 2071 using RET from BRT (located near keel side/outboard corner of MMOD shield) 7. **APFR**: S6 WIF 25 [**2,NN,E,11**]. ❑ √Blk-Blk, pull/twist test Ingress APFR 8. **PGT** [**B7** 25.5 ft-lb, **CCW2** 30 rpm, MTL **30.5**]-Rd TM with 5/8: √Anti-Backlash Neutral: Break torque on Outboard SABB fasteners (6), ~5 turns each <u>WARNING</u> Sharp edge hazard. Avoid contact with exposed threads on jack bolt #06 after SABB six-pack shell restraint is released 9. **PGT [B7** 25.5 ft-lb, **CCW2** 30 rpm, MTL **30.5]**-7.8-5/8-in ext: Release Outboard SABB fasteners (6), ~9 turns each 10. Temp stow six-pack clamp on HR S6 2072 (zenith-aft) 11. Egress AFPR. Remove APFR (RET to MWS) 12. Translate to WIF 34 (PVR face, near trunnion pin) 13. Temp stow APFR in WIF 34 14. Translate to Crewlock Bag (S6 HR 2040 or HR 2028). Preposition EVA Camera for EV1 retrieval 15. Transfer tools to Crewlock Bag: Rd TM, integral RET and 5/8-7.8-in ext socket from PGT to socket caddy 16. Retrieve 7/16-6-in ext socket from socket caddy and install on PGT (for Mast Tip Fastener release) 17. If time permits: Retrieve six-pack clamp and RET, previously temp stowed at HR 2072 Translate port-nadir to S6 external stow bin and stow six-pack clamp. √RET is now stowed on MWS

EVA 1 RELEASE SABB RESTRAINTS – TASK DATA

Estimated Task Duration:

	With RMS	Without RMS
One EV Crew	N/A	02:00
Two EV Crew	N/A	01:00

Tools:

EV1 (FF)	EV2 (FF)
N/A	PGT
	Rd TM with 5/8 PRD socket
	5/8-7.8-in ext socket (rigid)
	APFR

EVA Fasteners:

Fastener Name	Label	Head Size	Qty	Install Torque (ft-lb)	Release Torque (ft-lb)	Failure Torque (ft-lb)	Turns	RPM
Inboard SABB Launch Restraint	N/A	5/8	2	98	119	389	10 [1]	30
Outboard SABB Launch Restraint (Six-Pack Clamp)	1-6	5/8	6	97	118	390	10 [1]	30

[1] – Turn count measured on flight hardware 5/27/03

EVA Connectors:

Harness	From	To	Clamps (#)	Conn Size	Function
N/A					

Foot Restraints:

Task		WIF	APFR Setting
Release nadir-inboard	SABB Launch Restraint	S6-27	[9,NN,E,1] or [9,NN,E,12]
Release nadir-outboard	SABB Launch Restraint	S6-27	[2,NN,E,11] or {2,NN,F,12]
Release forward-inboard	SABB Launch Restraint	S6-25	[9,NN,E,1] or [9,NN,E,12]
Release forward-outboard	SABB Launch Restraint	S6-25	[2,NN,E,11] or [2,NN,F,12]

Notes:

1. If outboard SABB launch restraint tether point is not accessible prior to removal, Rd TM may be installed and locked onto a bolt to provide a tether point until the launch restraint is removed and the tether point is better accessible

Cautions:

1. Unfasten Jack bolt #6 (nearest the tether point) last. Fasteners #1-5 can be released in any order

Warnings:

1. Sharp edge hazard. Avoid contact with exposed threads on jack bolt #6 after SABB six-pack restraint released

EVA 1 RELEASE SABB RESTRAINTS – TASK DATA (Cont)

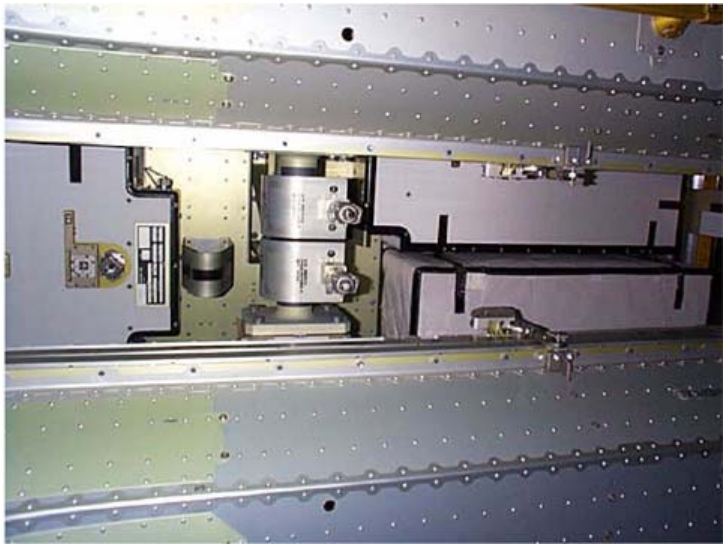

SABB Inboard Launch Restraint

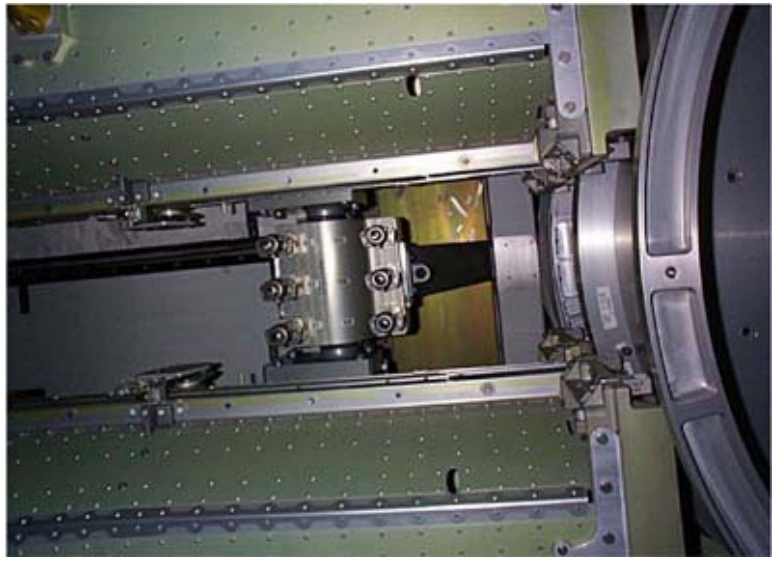

SABB Outboard Launch Restraint

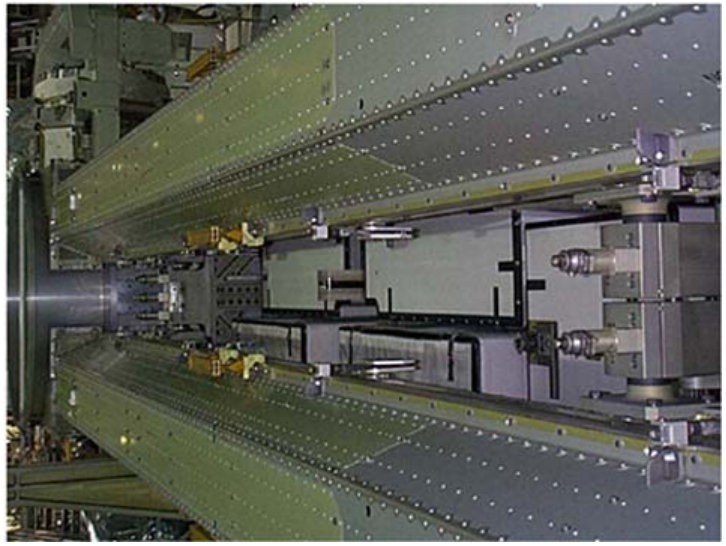

SABB Outboard and Inboard Restraints (left to right in view)

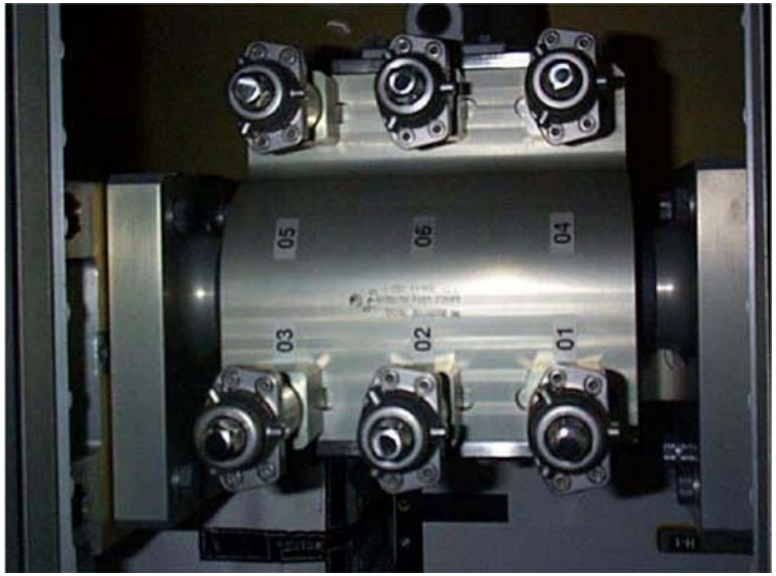

EVA 1 PVR RADIATOR CINCHES AND WINCH RELEASE (00:45)

IV

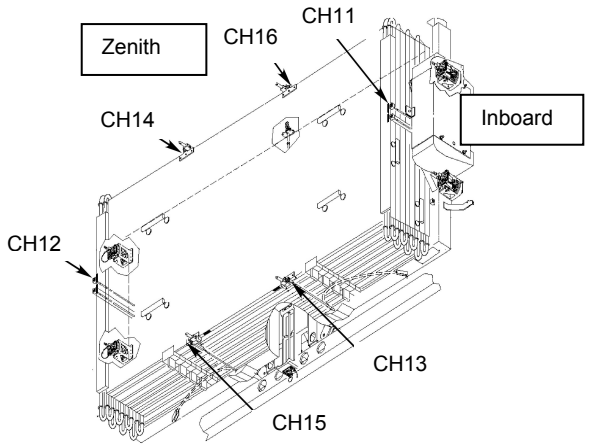

1. ❑ IV verify with **MCC-H**, vehicle in CMG control (thrusters inhibited) prior to PIP pin release

> WARNING
> ISS must be CMG-Thruster inhibited during partial deployment when unwinched to avoid damage to PV radiator

2. IV give EV1 GO to pull winch bar PIP pins

3. IV inform **MCC-H** when cinches and winch are released

EV1 – Swanson (FF)

RELEASE PVR CINCHES

> CAUTION
> Avoid contact with radiator bellows and thermal outer coating

1. Release **PVR Cinches H11 and H12, followed by H13** – **H16 (any order)**
   PGT [**B7** 25.5 ft-lb, **CCW2** 30 RPM, MTL **30.5**] – 7/16-6-in ext: 8-14 turns, as reqd to disengage
2. Stow cinch in clip. Verify positive retention

√	Cinch	BRT – HR	√	Cinch	BRT – HR
❑	H12 outboard	2063	❑	*H11 inboard	2042 (head zenith, feet nadir)
❑	H16 zenith	2009	❑	H15 nadir	2052
❑	H14 zenith	2053	❑	H13 nadir	2046

*NOTE: For efficiency, stow Crewlock Bag when able to new location.
Crewlock Bag stowage location is on S6 HR 2073 and HR 2074/HR 2072 (MMOD shield)

RELEASE OUTBOARD AND INBOARD PVR WINCH PIP PIN

> WARNING
> Moving hardware hazard. PVR panels are free to move after winch release

3. ❑ Verify tools and tethers clear of deploy envelope

4. On IV GO, release Outboard and Inboard winch bar PIP pin from winch clevis:
   ❑ Outboard PIP Pin (H34) ❑ Inboard PIP Pin (H33)

5. Remove winch bar from radiator panel, reinsert PIP pin into winch clevis
6. ❑ Verify PIP pin, lanyard and winch bar clear of radiator deploy envelope

7. Translate to Keel Pin location (S6 zenith-outboard)
   (Leave PGT 7/16-6-in ext on PGT – for Keel Pin Rotation)

EVA 1 PVR RADIATOR CINCHES AND WINCH RELEASE – TASK DATA

Tools:

EV1 (FF)	EV2 (FF)
PGT	PGT
7/16-6-in ext	7/16-6-in ext

EVA Fasteners:

Fastener Name	Label	Head Size	Qty	Release Torque (ft-lb)	Failure Torque (ft-lb)	Turns
Cinch	H11-H16	7/16-in	6	H11-H12: 15.8 H13-H16: 24.6	H11-H12: 35.7 H13-H16: 39.7	8-14

EVA Connectors: None

Foot Restraints:

Task	WIF	APFR Setting
Cinch H12 (CH12)	S6-32	6, WW, D, 11
Cinch H14 (CH14)	S6-24	6, UU, C, 1
Cinch H16 (CH16)	S6-20	6, SS, D, 1
Cinch H11 (CH11)	S6-20	6, WW, G, 1
Cinch H15 (CH15)	S6-23	6, TT, J, 11
Cinch H13 (CH13)	S6-19	6, TT, J, 11

PVR FQDC

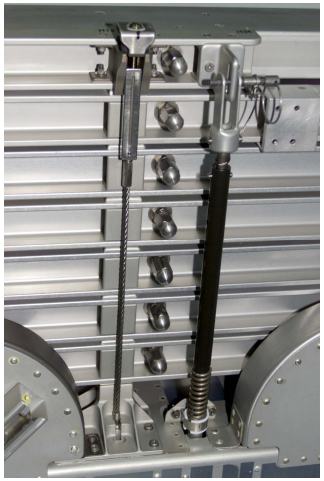

RADIATOR CINCH AND WINCH PIP PIN

Warnings:

1. Moving hardware hazard. Radiators are free to move after winches released
2. ISS must be CMG-Thruster inhibited during partial deployment when unwinched to avoid damage to PV radiator

Notes:

1. Incidental contact with silver radiator surface is acceptable
2. H11 and H12 must be released prior to the others

Constraints:

1. APFR ingress/egress cannot happen concurrently with radiator deploy

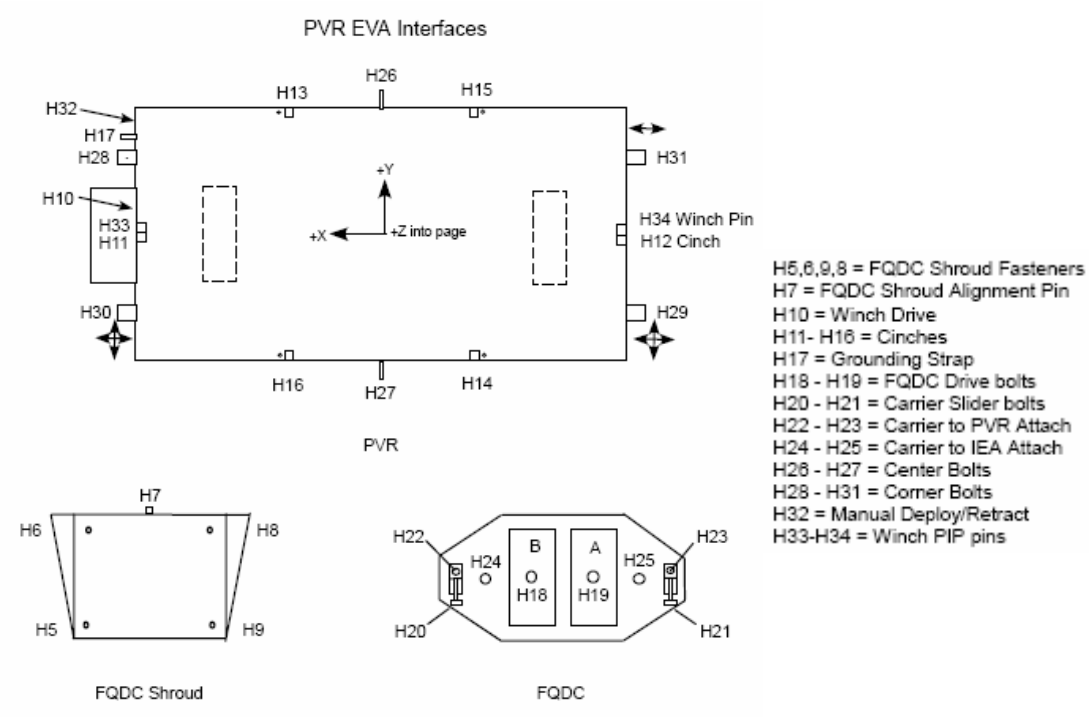

EVA 1 ROTATE IEA KEEL PIN AND RELEASE SAW BETA GIMBAL RESTRAINTS (00:45)

IV	EV1	EV2
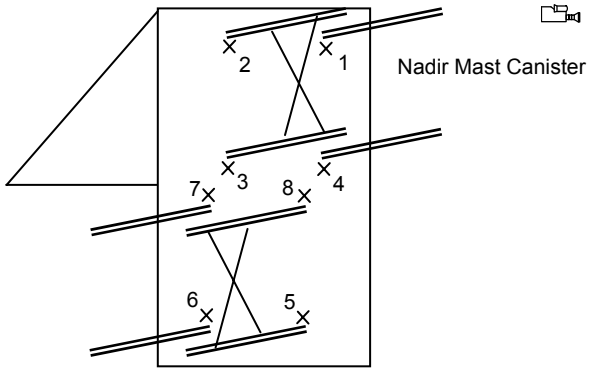 × denotes side of 4-bar hinge to inspect for lock indicator IEA Bulkhead looking inboard	WARNING Sharp edge. The Keel fastener has exposed bolt threads when removed from the Keel body ROTATE IEA KEEL PIN (ZENITH) (00:15) 1. BRT to keel structure handrail (S6 HR 2067) 2. **PGT [B7** 25.5 ft-lb, **CCW2** 30 rpm, MTL **30.5**]-7/16-6-in ext: Release fastener (~43 turns) 3. Remove the keel fastener completely from keel body 4. Rotate keel pin until hard dock detent capture 5. Verify alignment marks (view from side) 6. Re-install keel fastener into keel body 7. **PGT [B7** 25.5 ft-lb, **CW2** 30RPM, MTL **30.5**]-7/16-6-in ext: Engage fastener, 10 turns 8. Translate to Crewlock Bag (keep tether aft and clear of SABB) 9. Attach BRT RET from HR 2071 or 2072 to zenith six-pack clamp 10. Retrieve Ratchet Wrench from Crewlock Bag 11. Temp stow wrench on MWS (If MMOD Bolt Rel Get-Ahead complete, finish PVR Cinch Rel) WARNING Stored energy and collision hazard. Entire area behind the IEA bulkhead, Beta Gimbal/Solar Array Wing must be clear prior to Beta Gimbal Restraint disengagement Verify that Beta Gimbal/Solar Array motion has stopped before exiting worksite RELEASE NADIR WING (1B) BGA RESTRAINTS (00:15) 12. Release Primary Power Cable TA clamps (3) ❑ ❑ ❑ 13. Remove PIP pins (2) from launch restraint assembly Fwd ❑ Aft ❑ 14. Verify EV2 is clear of stored energy hazard 15. Ratchet Wrench – 5/8-7.8-in ext: Release Nadir Wing Beta Gimbal restraints (2), 11 turns ❑ ❑ If PGT w/Rd TM required to break torque: **PGT [B7** 25.5 ft-lb, **CCW2** 30 rpm, MTL **30.5]-**Rd TM with 5/8: √Anti-Backlash in Neutral: 5 turns 16. Re-insert Beta Gimbal Restraint PIP pins (2) Fwd ❑ Aft ❑	

EVA 1 ROTATE IEA KEEL PIN AND RELEASE SAW BETA GIMBAL RESTRAINTS (00:45) (Cont)

IV	EV1	EV2
	17. Stow ratchet wrench and return RET to MWS 18. Inspect 4-bar linkages to verify they are fully deployed and locked. Minimum 3 of 4 locked required (Perform manual assist to fully deploy/lock, as reqd. 4-bar linkage inspection may be deferred to later step for better view of indicators)	
1. Receive glove inspection report from EV1	19. Close TA clamps (3) ❑ ❑ ❑ 20. Perform glove/gauntlet inspection. Report glove status to IV 21. Translate to zenith wing BGA restraints worksite (Follow previous safety tether routing)	

4-BAR STOWED AND DEPLOYED CONFIGURATIONS

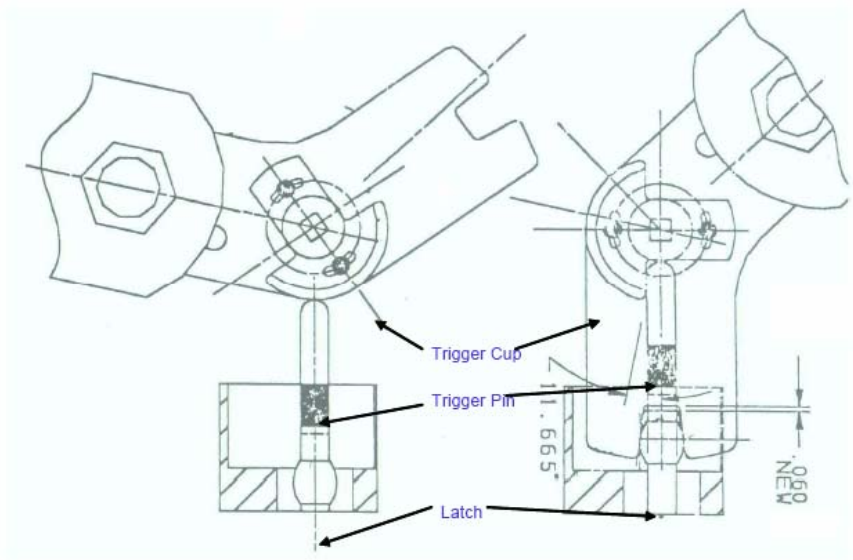

Stowed (Launch Configuration) **Deployed (On-Orbit Configuration)**

EVA 1 ROTATE IEA KEEL PIN AND RELEASE SAW BETA GIMBAL RESTRAINTS (00:45) (Cont)

IV	EV1	EV2
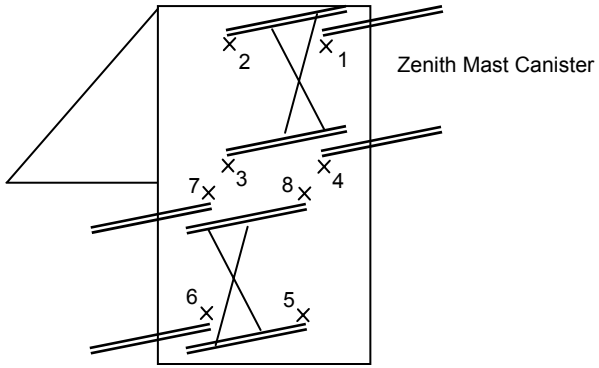 × denotes side of 4-bar hinge to inspect for lock indicator IEA Bulkhead looking inboard 1. IV, verify EV1 and EV2 tool inventories	CAUTION IEA Keel Pin must be rotated prior to the release of the Beta Gimbal Restraints WARNING Stored energy and collision hazard. Entire area behind the IEA bulkhead, Beta Gimbal/Solar Array Wing must be clear prior to Beta Gimbal Restraint disengagement Verify that Beta Gimbal/Solar Array motion has stopped before exiting worksite RELEASE ZENITH WING (3B) BGA RESTRAINTS (00:15) 1. Release Primary Power Cable TA clamps (3) ❑ ❑ ❑ (if TA clamps not released earlier) 2. Remove PIP pins (2) from launch restraint assy Fwd ❑ Aft ❑ If time permits: 3. Retrieve nadir six-pack and stow in external Stow Bin 4. Perform UNSTOW NADIR WING (3B) SABB, next proc 5. Verify EV2 is clear of stored energy hazard 6. Verify tools, TA clamps, PIP pins, and 4-bar linkages locked 7. Ratchet Wrench w/5/8-7.8-in ext: Release fasteners (2), 11 turns ❑ ❑ 8. Re-insert Beta Gimbal Restraint PIP pins (2) Fwd ❑ Aft ❑ 9. Translate to Crewlock Bag 10. Stow Ratchet Wrench in Crewlock Bag 11. Retrieve EVA Camera and stow on swing arm 12. Perform glove check and report status to IV 13. Translate to nadir SABB wing for unstow, as reqd	1. Inspect to verify 4-Bar linkages have been fully deployed and locked (min 3 of 4 locks reqd, both nadir and zenith) 2. Perform manual assist to fully deploy/lock, as reqd 3. Close TA clamps (3) ❑ ❑ ❑ 4-Bar Linkage Deploy Nadir Zenith ❑ ❑ 4. Perform glove/gauntlet check and report status 5. Translate to zenith SABB wing for unstow, as reqd

EVA 1 ROTATE IEA KEEL PIN AND RELEASE SAW BETA GIMBAL RESTRAINTS – TASK DATA

Aft Beta Gimbal Restraints and IEA Keel Structure

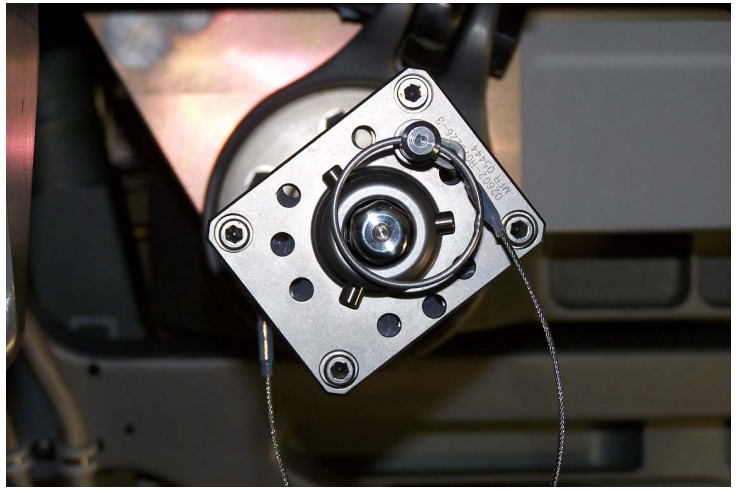

EVA 1 ROTATE IEA KEEL PIN AND RELEASE SAW BETA GIMBAL RESTRAINTS – TASK DATA (Cont)

Estimated Task Duration:

	With RMS	Without RMS
One EV Crew	N/A	00:30
Two EV Crew	N/A	N/A

Tools:

EV1	EV2
PGT (prime)	N/A
7/16 wobble socket-6 ext	

EVA Fasteners:

Fastener Name	Label	Head Size	Qty	Install Torque (ft-lb)	Release Torque (ft-lb)	Failure Torque (ft-lb)	Turns	RPM
IEA Keel Pin Restraint Bolt	N/A	7/16	1	4 gnd	38	168 removal 44 install	43	60

EVA Connectors:

Harness	From	To	Clamps (#)	Conn Size	Function
N/A					

Foot Restraints:

Task	WIF	APFR Setting
Rotate IEA Keel Pin	S6-32	11,MM,G,2
Rotate IEA Keel Pin	S6-40	12,QQ,G,12 (1B 4-bar must be deployed)

Notes:

None

Cautions:

None

Warnings:

1. Sharp edge. The Keel fastener has exposed bolt threads when removed from the Keel body

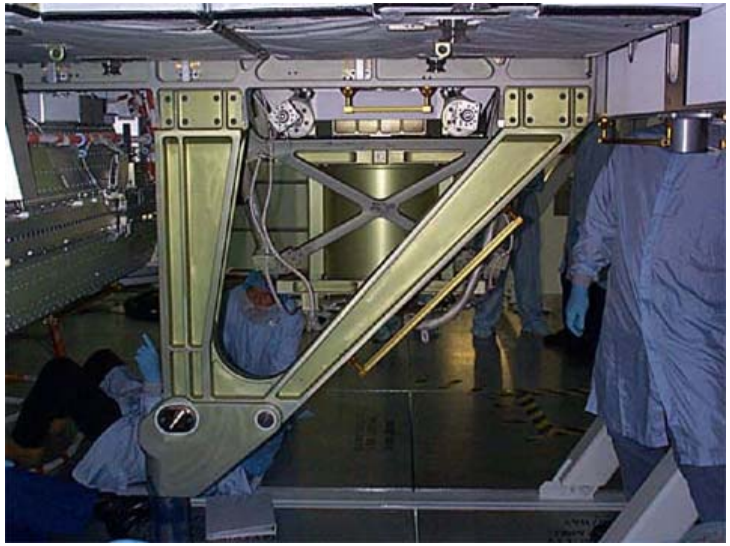

Beta Gimbal Restraints and IEA Keel Pin

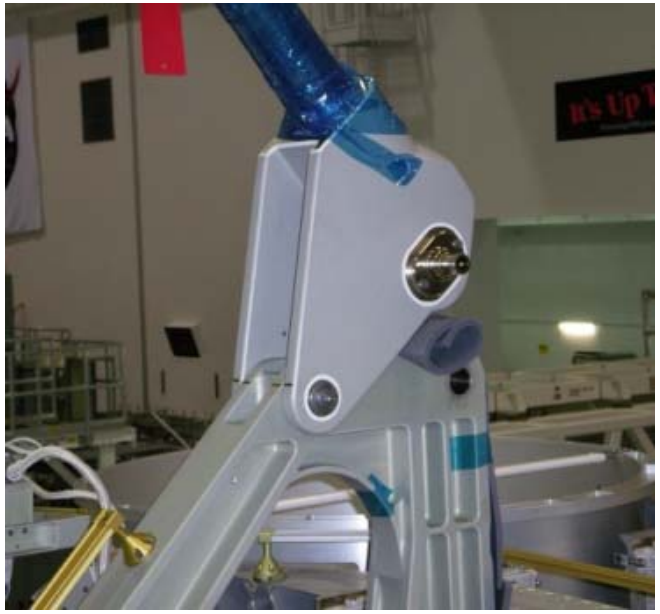

Beta Gimbal Restraints and IEA Keel Pin

EVA 1 ROTATE IEA KEEL PIN AND RELEASE SAW BETA GIMBAL RESTRAINTS – TASK DATA (Cont)

Estimated Task Duration:

	With RMS	Without RMS
One EV Crew	N/A	00:40
Two EV Crew	N/A	N/A

Tools:

EV1	EV2
Ratchet wrench	N/A
5/8 (rigid) Socket-7.8 ext	
BRT	
Rd TM with 5/8 prd (backup)	
PGT (backup)	

EVA Fasteners:

Fastener Name	Label	Head Size	Qty	Install Torque (ft-lb)	Release Torque (ft-lb)	Failure Torque (ft-lb)	Turns	RPM
Beta Gimbal Launch Restraint Bolts	N/A	5/8	2	60 gnd	60 @ 70F, 118 @200F	496	10-12	60

EVA Connectors:

Harness	From	To	Clamps (#)	Conn Size	Function
N/A					

Foot Restraints:

Task	WIF	APFR Setting
Release Nadir Beta Gimbal Restraints		
Release Zenith Wing Beta Gimbal Restraints		

Notes:

1. Do not release the third clamp from the BMRRM. This is a sliding clamp which the Primary power cable is intended to slide through

Cautions:

The following must be complete prior to release of BGA Restraints:

1. SABB Restraints Released (2 per wing)
2. Primary Power cable TA clamps released (3 per wing)
3. APFR relocated from SABB Restraint location
4. IEA Keel Pin rotated prior to BGA Restraint release

Warnings:

1. Entire area behind the IEA bulkhead, Beta Gimbal/Solar Array wing, must be clear prior to fastener disengagement
2. Verify that Beta Gimbal/Solar Array wing motion has stopped before exiting worksite

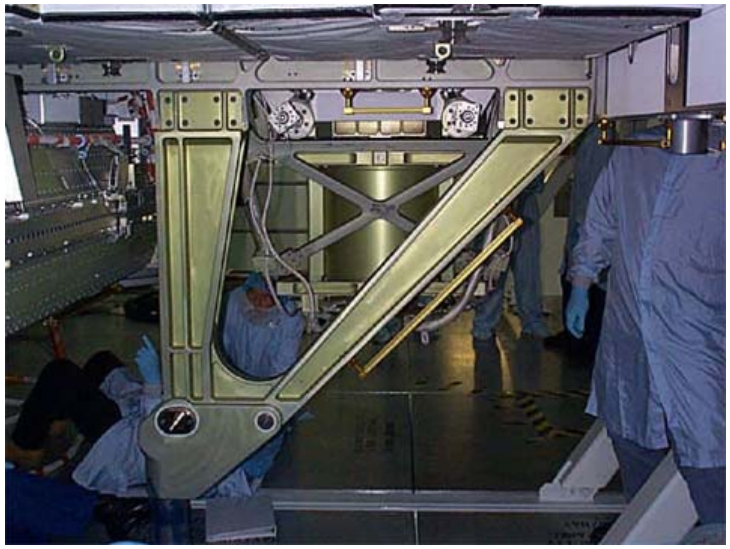

Beta Gimbal Restraints (Aft Wing)

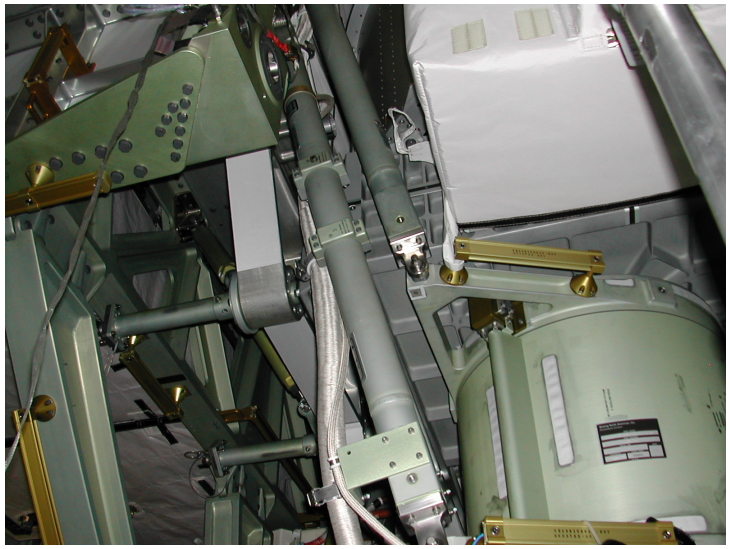

Primary Power Cable TA Clamps (Aft Wing)

EVA 1 UNSTOW SABB, RELEASE MAST, AND REMOVE ECU/SSU SHROUD (01:10)

IV	EV1 – SWANSON	EV2 – ARNOLD
	WARNING Pinch Point – Stay clear of pivot fitting and lockout arm during SABB rotation	WARNING Pinch Point – Stay clear of pivot fitting and lockout arm during SABB rotation
	UNSTOW NADIR WING (1B) SABB 1. Remove PIP pin from Lockout arm 2. Rotate blanket box to deploy position 3. Verify pivot arm is locked with locking sleeve over joint 4. Install PIP pin through the Lockout arm 5. Repeat steps 2-5 for other blanket box	UNSTOW ZENITH WING (3B) SABB 1. Remove PIP pin from Lockout arm 2. Rotate blanket box to deploy position 3. Verify pivot arm is locked with locking sleeve over joint 4. Install PIP pin through the Lockout arm 5. Repeat steps 2-5 for other blanket box
	WARNING When captive EVA fasteners are released, the pop-up spring could protrude out between the bolt head and housing producing a puncture hazard	WARNING When captive EVA fasteners are released, the pop-up spring could protrude out between the bolt head and housing producing a puncture hazard
	6. **PGT [A7** 9.2 ft-lb, **CCW2** 30 rpm, MTL **30.5]-7/16-6-in ext:** Release Mast Tip fasteners (3), ~14 turns 7. Verify Mast Tip Fasteners are released ❑ ❑ ❑	6. **PGT [A7** 9.2 ft-lb, **CCW2** 30 rpm, MTL **30.5]**-7/16-6-in ext: Release Mast Tip fasteners (3), ~14 turns 7. Verify Mast Tip Fasteners are released ❑ ❑ ❑
	NADIR (1B) ECU/SSU SHROUD REMOVAL AND JETTISON 8. Translate to position near nadir ECU/SSU (zenith-forward-outboard)	ZENITH (3B) ECU/SSU SHROUD REMOVAL AND JETTISON 8. Translate to position near zenith ECU/SSU (nadir-aft-outboard)
1. ❑ IV verify **MCC-H** is GO for ECU/SSU shroud jettison	9. Release SSU long strap on cover 10. Release ECU short straps (2) ❑ ❑ 11. Remove ECU shroud 12. Release ECU ground strap PIP pin	9. Release SSU long strap on cover 10. Release ECU short straps (2) ❑ ❑ 11. Remove ECU shroud 12. Release ECU ground strap PIP pin Stow PIP pin in ECU shroud pocket
2. IV inform **MCC-H** of impending shroud jettison 3. IV give EV GO for shroud jettison	13. Time permitting, take photos	13. Time permitting, take photos
4. IV receive shroud speed/direction report from EV crew	14. Translate to shroud jettison location (retrograde, forward-nadir)	14. Translate to shroud jettison location (retrograde, forward-nadir)
	On IV GO: 15. Jettison ECU shroud 16. EV1 report speed/direction to IV	On IV GO: 15. Jettison ECU shroud 16. EV1 report speed/direction to IV

	Nadir (1B) Shrouds	Zenith (3B) Shrouds
ECU	____ ft/s _____	____ ft/s _____
SSU	____ ft/s _____	____ ft/s _____

EVA 1 UNSTOW SABB, RELEASE MAST, AND REMOVE ECU/SSU SHROUD (01:10) (Cont)

IV

Tool Inventory List

EV1	EV2
□ PGT w/7/16-6-in ext + RET □ 2 – RETs (1 w/PIP pin) □ 1 – BRT w/RET □ 1 – Trash Bag □ 1 – Adj Tether □ 2 – Wire Ties	□ PGT w/7/16-6-in ext + RET □ 2 – RETs (1 w/PIP pin) □ 1 – BRT w/RET □ 1 – Trash Bag □ 2 – Wire Ties

Crewlock Bag

- □ 1 – Adjustable Tethers (on outside of bag)
- □ 1 – Torque Wrench (on outside of bag) w/adj tethers (2)
- □ EVA Camera w/bracket + RET
- □ 2 – Cannon Connector Tools w/RETs (2)
- □ Rnd TM w/5/8-in prd socket
- □ 1 – Socket caddy w/2-in socket + 5/8-7.8-in socket
- □ Ratchet Wrench w/5/8-7.8-in socket

EV1

17. Release SSU short straps (2) ❑ ❑
18. Remove SSU shroud
19. Release SSU ground strap PIP pin
    Stow PIP pin in SSU shroud pocket
20. Time permitting, take photos
21. Translate to shroud jettison location (retrograde, forward-nadir)

On IV GO:

22. Jettison SSU shroud
23. EV1 report speed/direction to IV
24. Verify both six-pack clamps are stowed in ext Stow Bin
    If six-pack clamps not already stowed in ext Stow Bin:
    - ❑❑ Retrieve clamp(s) from temp stow location(s) (nadir at HR 2060 and zenith at HR 2072)
    - ❑❑ Stow clamp(s) in external Stow Bin
    - ❑❑ Verify Stow Bin MLI is secured (Velcro covered)
25. Translate to Crewlock Bag (S6 HR 2073 and HR 2074/HR 2072)
26. Transfer EVA Camera to EV2
27. Translate to APFR (S6 WIF 34)
28. Retrieve APFR. Stow APFR on BRT
29. Perform tool inventory
30. Perform glove/gauntlet inspection

EV2

17. Release SSU short straps (2) ❑ ❑
18. Remove SSU shroud
19. Release SSU ground strap PIP pin
    Stow PIP pin in SSU shroud pocket
20. Time permitting, take photos
21. Translate to shroud jettison location (retrograde, forward-nadir)

On IV GO:

22. Jettison SSU shroud
23. EV1 report speed/direction to IV
24. Translate to Crewlock Bag (S6 HR 2073 and HR 2074/HR 2072)
25. Receive EVA Camera from EV1
26. Stow EVA Camera in Crewlock Bag
27. BRT to Crewlock Bag
28. Perform tool inventory
29. Perform glove/gauntlet inspection

EVA 1 UNSTOW SABB, RELEASE MAST TIP – TASK DATA

Estimated Task Duration:

	With RMS	Without RMS
One EV Crew	N/A	00:45
Two EV Crew	N/A	00:20

Tools:

EV1	EV2
PGT	
7/16 (wobble) Socket-6 ext	

EVA Fasteners:

Fastener Name	Label	Head Size	Qty	Install Torque (ft-lb)	Release Torque (ft-lb)	Failure Torque (ft-lb)	Turns	RPM
Mast Canister Tip Fitting	Yes	7/16	3	7	8	12.8	14	30

EVA Connectors:

Harness	From	To	Clamps (#)	Conn Size	Function
N/A					

Foot Restraints:

Task	WIF	APFR Setting
N/A		

Notes:

1. Mast Tip Fasteners will pop-up when disengaged

Cautions:

1. Deploy SABB no faster than 6 degrees/second (15 seconds minimum for complete deployment)
2. 4-bar linkage must be deployed and SABBs rotated into the deployed position before Mast Canister Tip Fitting restraints can be disengaged

Warnings:

1. Pinch point hazard – Stay clear of pivot fitting and lockout arm during SABB rotation
2. When captive EVA fasteners are released, the pop-up spring could protrude out between the bolt head and housing producing a puncture hazard

EVA 1 UNSTOW SABB, RELEASE MAST TIP – TASK DATA (Cont)

EVA Tools:

EV1 (FF)	EV2 (FF)
N/A	N/A

EVA Fasteners: None

EVA Connectors: None

Foot Restraints: None

Notes:
1. If only one shroud set is removed, 1B covers are preferred
2. If only one shroud of a set is removed, ECU is preferred

Left Side of SSU Shroud – 2 Short Straps

Right Side of SSU Shroud – 1 Long Strap

EVA 1 S6 MMOD SHIELD BOLT TORQUE RELEASE (00:20) (GET-AHEAD)

IV	EV1/2 – Swanson/Arnold (FF)
1. Verify with **MCC-H**, station configuration good for MMOD Shield bolts release (SARJ DLA locked) 2. Give EV GO for MMOD shield bolt release	<u>IEA MMOD SHIELD BOLT RELEASE</u> (00:20) (GET-AHEAD) 1. On IV GO, translate to S6 MMOD shield 2. **PGT[B7** 25.5 ft-lbs, **CCW1** 10 RPM, MTL **30.5]-6ext 7/16:** Release IEA MMOD Shield bolts, ~1 turn ❑ Zenith (Keel side) – Inboard (#1) ❑ Zenith (Keel side) – Outboard (#2) ❑ Nadir (Non-Keel side) – Outboard (#3) ❑ Nadir (Non-Keel side) – Inboard (#4) 3. Report to IV when MMOD Shield bolts (4) are released (Retrieve ratchet wrench and stow at Keel Pin location, as reqd)

EVA 1 S6 MMOD SHIELD BOLT TORQUE RELEASE – TASK DATA (GET-AHEAD)

Estimated Task Duration:

	With RMS	Without RMS
One EV Crew	N/A	01:00
Two EV Crew	N/A	00:30

Tools:

EV1	EV2
PGT	PGT
7/16 (wobble) Socket-6 ext	7/16 (wobble) Socket-6 ext
	EVA Temp Rail Stop

EVA Fasteners:

Fastener Name	Label	Head Size	Qty	Install Torque (ft-lb)	Release Torque (ft-lb)	Failure Torque (ft-lb)	Turns	RPM
MMOD Shield Bolt	Yes	7/16	4	37.5 gnd	42.2	93.5	1	10
SVS Target bolts	No	7/16	4	3.3-4.2	3.8	7.5	11.5	60
ETRS Bolts	No	7/16	2	4.2-6.6	NA	12.8	4-6	30

EVA Connectors:

Harness	From	To	Clamps (#)	Conn Size	Function
N/A					

Foot Restraints:

Task	WIF	APFR Setting
Zenith (Keel side) Inboard (#1)		
Zenith (Keel side) Outboard (#2)		
Nadir (Non-Keel side) Outboard Bolt (#3)		
Nadir (Non-Keel side) Inboard Bolt (#4)		

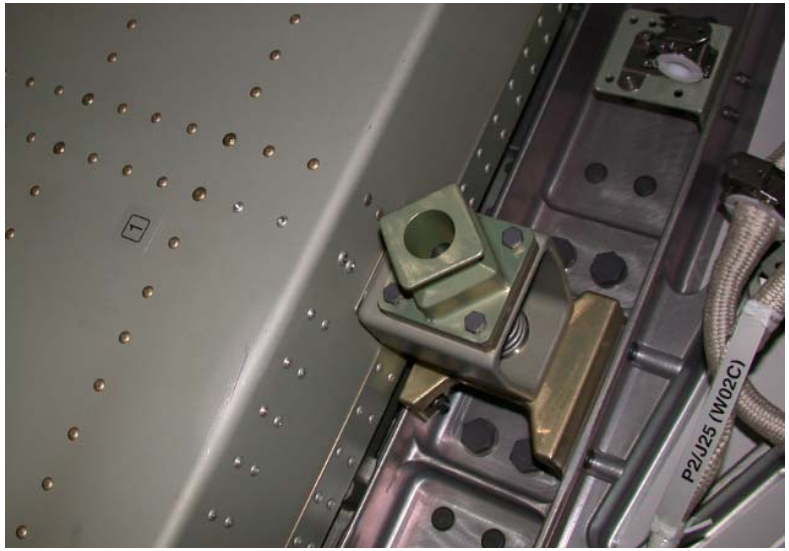

IEA MMOD Shield Bolt

Notes:

1. Requirement for releasing torque on IEA MMOD Shield Bolts is within 1 year of launch

Cautions:

1. ETRS bolts are not captive. Bolts may be lost if released more than 15 turns
2. During removal of SVS fasteners:
   - Limit turn count to minimum required for fastener release
   - Minimize side loading bolt head
   - Maintain axial force on fastener to compress spring during rotation

Warnings:

None

EVA 1 CLEANUP (00:40)

IV	EV1 – Swanson (FF)	EV2 – Arnold (FF)
	CLEANUP 1. Translate to spare safety tether stow location (S5 HR 2114) 2. Tether swap back to primary 85-ft safety tether ❑ √Gate closed ❑ √Hook locked ❑ √Safety Tether Reel unlocked	CLEANUP 1. Translate to spare safety tether temp stow location (S5 HR 2116) 2. Tether swap back to primary 85-ft safety tether ❑ √Gate closed ❑ √Hook locked ❑ √Safety Tether Reel unlocked
	3. Stow spare Safety Tether on Crewlock Bag	3. Stow spare Safety Tether on Crewlock Bag
1. Record APFR settings _____	4. Translate to CETA Carts 5. Stow APFR at CETA Cart 2 (outboard) WIF 04 (zenith-outboard); report settings	4. Translate to Airlock
2. IV verify both EV crew are inboard of the starboard SARJ. Then, give **MCC-H** GO to rotate starboard SARJ, as reqd	6. Translate to EV2 prime Safety Tether anchor point (S1 HR 3222) 7. EV1 remain at S1 HR 3222 until EV2 gives GO for Safety Tether swap 8. EV1 give GO to IV for starboard SARJ rotation, when inboard of SARJ	

EVA 1 A/L INGRESS (00:15)

IV	EV1 – Swanson (FF)	EV2 – Arnold (FF)
1. Perform prior to ingress: WVS PWRDN (PHOTO/TV, WVS CUE CARD)	INGRESS 1. On EV2 GO, connect right waist tether to EV2 safety tether hook and release EV1 Safety Tether and attach to MWS	INGRESS 1. Open hatch thermal cover 2. Ingress Airlock 3. Attach right waist tether to EVA hatch D-ring extender 4. Give EV1 GO to attach right waist tether to EV2 safety tether 5. Release Crewlock Bag from BRT, stow bag in Airlock
2. EV1 and EV2 – begin cold soak, as reqd	2. Adjust TCV to begin cold soak, as reqd 3. Translate to Airlock 4. Ingress Airlock 5. Close thermal cover. Attach Velcro straps	6. Adjust TCV to begin cold soak, as reqd 7. Perform EVA Camera ops, as reqd
	DCM 6. Retrieve SCU, remove DCM cover 7. Connect SCU to DCM. √SCU locked 8. WATER – OFF (fwd), expect H2O IS OFF msg	DCM 8. Retrieve SCU, remove DCM cover 9. Connect SCU to DCM. √SCU locked 10. WATER – OFF (fwd), expect H2O IS OFF msg
	CAUTION Do not close hatch until EMU WATER – OFF for 2 min	
	9. Verify outer hatch clear of hardware 10. EV Hatch – verify handle position per hatch decal. Close and lock hatch 11. Go to PRE REPRESS portion of {CREWLOCK DEPRESS/REPRESS CUE CARD} (SODF: ISS EVA SYS: EVA PREP/POST)	11. Go to PRE REPRESS portion of {CREWLOCK DEPRESS/REPRESS CUE CARD} (SODF: ISS EVA SYS: EVA PREP/POST)

This Page Intentionally Blank

NOTES

NOTES

EVA 2 SUMMARY TIMELINE

PET HR : MIN	IV	15A EVA 2 EV1 – Swanson	EV3 – Acaba	PET HR : MIN
00:00		**EVA 2 POST DEPRESS, EGRESS & SETUP (00:50)** • Post Depress/Egress (00:20) • Setup (00:30)	**EVA 2 POST DEPRESS, EGRESS & SETUP (00:50)** • Post Depress/Egress (00:20) • Setup (00:30)	00:00
01:00		**P6 BATTERY PREP (01:10)** • APFR Install • Gap Spanner Install • Break Torque on P6 Batteries	**P6 BATTERY PREP (01:10)** • APFR Install • Gap Spanner Install • Break Torque on P6 Batteries	01:00
02:00		**P3 NADIR UCCAS (01:15)**	**P3 NADIR UCCAS (01:15)**	02:00
03:00		**P1 RBVM MLI (00:15)** **P1 FHRC P-CLAMPS (00:50)**	**P1/P3 FLUID JUMPER (00:30)** **P1 FHRC P-CLAMPS (00:35)**	03:00
04:00		**S3 OUTBOARD/ZENITH PAS (01:00)**	**S3 OUTBOARD/ZENITH PAS (01:00)**	04:00
05:00		**TOOL STANCHION RELOCATE (00:25)**	**APFR RETRIEVE (00:25)**	05:00
06:00		**EVA 2 CLEANUP & INGRESS (00:40)** • Cleanup (00:15) • Ingress (00:25)	**EVA 2 CLEANUP & INGRESS (00:40)** • Cleanup (00:15) • Ingress (00:25)	06:00
06:30	**EVA 2 PET = 06:30 hr**	**PRE-REPRESS (00:05)**	**PRE-REPRESS (00:05)**	06:30

EVA 2 INHIBIT PAD

Orbiter (1)

ALL EVAs

TCS
L12 1. √TCS POWER – OFF

KU-BAND ANTENNA
MCC-H 1. √KU-BAND Mask – active
2. √KU-BAND EVA Protect Box – active

Ground

ALL EVAs

Ground Radar
MCC-H 1. √TOPO console, ground radar restrictions in place for EVA

USOS (1)

TASK SPECIFIC INHIBITS

P6 Battery Prep
MCC-H 1. BGA 2B locked
2. BGA 4A locked (Will be unlocked once EV on P6 IEA)

USOS (2)

ALL EVAs

PCU

NOTE
PCUs may require up to a 1-hr warmup period before they are operational

MCC-H 1. √PCUs (two) operational in discharge mode and one of the following:
a. CCS PCU EVA hazard control FDIR enabled
b. No more than two arrays unshunted and oriented < 105º from velocity vector

If one or both PCUs failed
2. No more than two arrays unshunted and oriented < 105º from velocity vector

EuTEF
COL-CC Verify PLEGPay Power Status (ETF_PLEGPAY_Pwr_Stat) – OFF

LOCATION DEPENDENT INHIBITS

Lab Window
{For APFR relocation}
IV When EV crew less than 10 ft from window or in window FOV, close window shutter

KU-Band (SGANT) Antenna
{On call, EV crew not expected to be in this area}
MCC-H If EV crew < 3.3 ft from KU-BAND antenna
1. Park KU-BAND:
1.1 Pointing Mode – Inhibit
1.2 PLC – Reset
1.3 Autotrack Continuous Retry – Inhibit

Mobile Transporter
MCC-H 1. √MT latched

EVA 2 INHIBIT PAD (Cont)

USOS (3)

LOCATION DEPENDENT INHIBITS

S-Band (SASA) Antennas
{On call, EV crew not expected to be in this area}
MCC-H If EV crew < 3.6 ft from S1 SASA [P1 SASA]
1. P1 SASA (S1 SASA) – Active
2. S1 SASA [P1 SASA] – Powered down

SARJ
{P6 Battery Prep & P3 Nadir UCCAS}
MCC-H When EV crew working within 2 ft or outboard of Port SARJ
1. √DLA (1) – LOCKED
2. All motor setpoints set to zero
3. All motors deselected

{S3 Outboard/Zenith PAS}
MCC-H When EV crew working within 2 ft or outboard of Stbd SARJ
1. √DLA (1) – LOCKED
2. All motor setpoints set to zero
3. All motors deselected

TRRJ
{EVA Start through P1 FHRC P-Clamps}
MCC-H When EV crew working or safety tether within 2 ft of P1 TRRJ rotation envelope
1. √DLA (1) – LOCKED

{S3 Outboard/Zenith PAS}
MCC-H When EV crew working or safety tether within 2 ft of S1 TRRJ rotation envelope
1. √DLA (1) – LOCKED

FPMU
{On call, EV crew not expected to be in this area}
MCC-H If EV crew working within 5 ft of Floating Potential Measurement Unit
1. FPMU power – Off

SSPTS
{On call, EV crew not expected to be in this area}
MCC-H If EV crew working within 2 ft of SSPTS cables
1. RPCM LA1A4A D RPC 3 – Open, Close Cmd Inhibit
2. RPCM LA2A3B D RPC 1 – Open, Close Cmd Inhibit
3. RPCM Z14B A RPC 2 – Open, Close Cmd Inhibit
4. RPCM Z13B A RPC 2 – Open, Close Cmd Inhibit

EVA 2 INHIBIT PAD (Cont)

RSOS (1)

ALL EVAs

SM Antennas

IV
1. GTS – Deactivate
2. ARISS (Ham Radio) – Deactivate or VHF (144-146 MHz) TX only

EVAs ON PMA1 OR RSOS (LOCATION DEPENDENT)

FGB Thrusters
{APFR Relocate}

MCC-M
1. √FGB MCS unpowered
2. √All FGB Attitude Control Thruster Valves (eighty) – closed
3. √FGB Attitude Control Manifold Valves – closed КШК1, КШК2, КШК4, КШК5, КШК9,ОКО3, ОКГ3, ОКО6, ОКГ6, ОКО7, ОКГ 7, ОКО8, ОКГ8

Soyuz Thrusters
{APFR Relocate}

MCC-M
1. √Soyuz manifolds (four) – closed ЭКО1, ЭКО2, ЭКГ1, ЭКГ2
2. √Soyuz MCS unpowered
3. √Soyuz Attitude Control Thruster Valves (fifty-two) – closed
4. √Soyuz Main Engine Valves (K1, K2, K3, K4, K5, K6) – closed

FGB Antennas
{APFR Relocate}

MCC-M
1. √FGB KURS P [КУРС P] – Deactivated

Soyuz Antennas
{APFR Relocate}

MCC-M
1. √Soyuz KURS A [КУРС A] – Deactivated

EVA 2 NOTES, CAUTIONS, AND WARNINGS

NOTES

1. Bolt install: Report torque and turns
2. Bolt release: Report torque and turns (if different from published range)
3. EVA connectors: After dis-connection and prior to connection; verify pin and EMI band integrity. Verify connector free of FOD
4. Inspect Fluid QDs for damage, prior to mating
5. Toolbox doors must be closed with one latch per door, when EV crew not in immediate vicinity
6. Avoid contact with OBSS striker bars (Vitrolube coating)

CAUTION

ISS Constraints

A. Avoid inadvertent contact with
1. Grapple fixture shafts (drylube)
2. PIP pins
3. EVA Crane [PMA1]
4. TCS Reflectors [PMA2,PMA3]
5. APAS hardware [PMA2,PMA3]
6. CETA Lights (Z-93 paint) [LAB,S1,Node 1]
7. Deployed MISSEs [Columbus EPF]
8. Passive UMAs
9. MBS/SSRMS/SPDM/JEMRMS taped radiative surfaces: VDU, ACU, JEU, LEU, MCU, CRPCMs, and Cameras
10. Deployed TUS cable [Nadir CETA rail]
11. S0 aft face Radiator
12. GPS Antennas (S13 paint) [S0,JLP]
13. UHF Antennas [LAB,P1]
14. ETCS Radiator flexhoses and panels [S1,P1]
15. EETCS/PV Radiator flexhoses, bellows and panels [P6,P4,S4,S6]
16. SASA RF Group [S1,P1]
17. Heat pipe radiators [Z1]
18. PCU cathode and HCA ports [Z1]
19. Ku-Band Antenna (SGANT) dish [Z1]
20. CMG cover/shells [Z1]
21. SPDM SJEU, EP, OTCM, LEU, and LEE VDU Radiator surfaces
22. Open CBM petal covers, LAB window shutter, and JPM window shutter
23. FPMU [S1]
24. OTSD
25. COL HAM radio antennas [COL-Nadir]
26. JTVE Cameras [JEM]
27. JEM A/L Target and Pins
28. S0/Node 2 Fluid Tray Hardlines at Node 2 end are limited to 25 lb

CAUTION (Cont)

ISS Constraints (Cont)

B. Electrical cables
1. Avoid bend radii < 10 times cable diameter

C. Fiber optic cables
1. Avoid bend radii < 10 times cable diameter
2. Avoid pulling on cable during mate/demate

D. Fluid line flex hoses and QDs
1. Avoid bend radii < 5 in for hoses with diameter < 1 in on LAB, S0, S1, P1, and 10-in for hoses with diameter < 1 in on all other elements
2. Avoid bend radii < 14 in for hoses with a diameter ≥ 1 in
3. Additional care should be taken to not exceed bend radii when applying loads at the flexible hose to rigid tube stub interfaces
4. Ensure fluid QD booties are fully closed prior to leaving worksite; wire tie if reqd

E. For structural reasons
1. Avoid vigorous body motions, quick grabs and kickoffs against tether restraints
2. Avoid performing shaking motions (sinusoidal functions) more than four cycles
3. Avoid kicking S1/P1 radiator beam
If any of these occur, wait 2 to 5 min to allow structural response to dissipate

EVA 2 NOTES, CAUTIONS, AND WARNINGS (Cont)

CAUTION (Cont)

ISS Constraints (Cont)

F. Other
1. ITT Cannon connector: On demated connectors, do not rotate collar or manipulate cable/connector using collar or connector tool
2. WIS Antennas: Do not use as handholds [Node 1,P6,Z1]
3. Lubricant from Ku-Band SGANT gimbals [Z1], CMGs [Z1], and RTAS Ground Strap fasteners [P6,P4,S4] can contaminate EMU
4. MLI handholds are not rated for crewmember translation loads
5. CBM petal covers may not be used as handholds unless both launch restraint pins are engaged
6. Prevent inadvertent contact of the tether shuttle with ETRS when the P3/S3 Tether Shuttle Stop is raised away from the rail

CAUTION (Cont)

Shuttle Constraints

A. Avoid inadvertent contact with
1. OBSS and SRMS Composite Sections, Joint Torque Arms, Grapple Fixture Shafts, and Cable Harnesses
2. LCS (silver Teflon) and LDRI (silver Teflon) and ITVC (gold foil) [OBSS]
3. WVS Antenna [ODS Truss & PLB Sill]
4. Payload Bay and Camera wire harnesses, cables, cable guides, and connectors

B. No touch
1. LDRI diffuser [OBSS]
2. OBSS saddle contacts (when OBSS unberthed) [OBSS]
3. Monkey fur [PLB]
4. Cameras: Metallic surfaces [PLB]
5. Ku-Band Antenna black dish and gold thermal blankets [PLB]

EVA 2 NOTES, CAUTIONS, AND WARNINGS (Cont)

WARNING

ISS Constraints

A. Avoid inadvertent contact with
1. Grapple fixture targets and target pins
2. SSU, ECU, beta gimbal platform, mast canister, SAW blanket boxes unless the beta gimbal is locked and the motor is turned off
3. Stay inboard of SARJ when active
4. Stay 2 ft from S1/P1 radiator beam rotational envelope when beam is free to rotate
5. Stay 5 ft from moving MT on face 1
6. SOLAR and EuTEF [COL EPF]

B. Handrails
1. Handrails previously used for MISSE attachment may not be used as a safety tether point [A/L endcone 564 & 566, A/L Tank 2 nad/fwd & port/fwd, P6 5389]

C. Pinch
1. NZGL connector linkage. Use caution when mating/locking
2. ITT Cannon Connector rotating housing
3. EV side of IV Hatch during Hatch operation (also snag hazard) [A/L]
4. LAB window shutter and CBM petal cover and JPM window shutter linkages during operation
5. JEMRMS HRM capture latches
6. JEM Cameras (JTVEs, EVE, WVE)
7. JEM EFBM capture latches

D. QDs
1. If QD is in FID when valve is opened (bail fwd), QD will leak and fluid line may whip
2. Do not rotate if in mated/valve open config

WARNING (Cont)

ISS Constraints (Cont)

E. RF radiation exposure
1. Stay 3.6 ft from S-Band (SASA) high gain Antenna when powered [S1,P1]
2. Stay 1.3 ft from S-Band (SASA) low gain Antenna when powered [S1,P1]
3. Stay 1 ft from UHF Antenna when powered [LAB,P1]
4. Stay 0.3 ft from fwd/aft JPM PROX antenna

F. Sharp Edges
1. Inner edges of WIF sockets
2. APFR active WIF probes
3. Mating surfaces of EVA connectors Avoid side loads during connector mating
4. Back side of MMOD shield fasteners
5. Spring loaded captive EVA fasteners (e.g., 6B-boxes, BMRRM, RTAS, SARJ Covers); the end of the spring may protrude
6. PMA umbilical launch restraints-exposed bolt threads
7. Adjustable Fuse Tether (Fish Stringer) buckles stowed in Node Bag
8. Nickel coated braided copper Ground Straps may contain frayed wires [P6,P4,S4,S6]
9. SPDM OTCM gripper jaws

WARNING (Cont)

ISS Constraints (Cont)

F. Sharp Edges (Cont)
10. Solar Array Blanket Box [P6,S6]
11. Keep hands away from SSRMS LEE/POA/SPDM LEE/JEMRMS EE opening, snares, and PDGF curvic coupling (teeth)
12. Fastener threads on back of Z1 U-jumper male FQD panel, if nutplate cap missing
13. Outboard MT rail attachment lug near P6 handrail 5333 and gap spanner
14. P2 connector on EWIS box TAA-06 [Zenith/Forward Corner 1 of P5 – SARJ at 0 deg]
15. Port/Aft portion of A/L circular HR [HR 0506]
16. Interior of JEMRMS HRMs
17. JEM A/L hatch corners

G. Thermal
1. EVA connectors with booties may become hot if left uncovered. Handling may need to be limited
2. PMA handrails may be hot. Handling may need to be limited
3. Turn off glove heaters when comfortable temp reached to prevent bladder damage. Do not pull fingers out of gloves when heaters are on
4. Uncovered trunnion pins may be hot
5. SSRMS/MBS/SPDM/JEMRMS/JTVE operating cameras and lights may radiate large amounts of heat

WARNING (Cont)

ISS Constraints (Cont)

G. Thermal (Cont)

6. Stay ≥ 1 ft away from PMAs and MMOD shields > 270 degF if EMU sun visor up; limit time to 15 min or less if > 300 degF
7. Stay at least 0.5 ft away from PMA and MMOD shields > 325 degF
8. Do not touch EMU protective visor if temp has been < -134 degF for > 15 min
9. No EMU TMG contact with PMAs and MMOD shields > 320 degF
10. No EMU boot contact with foot restraint when temp < -120 degF or > 200 degF
11. Columbus end cones may violate touch temperature constraints when $-75 \leq \beta \leq -60$ or $60 \leq \beta \leq 75$
12. PDGF surfaces may not meet touch temperature requirements for unlimited contact when $\beta \leq -70$ or $\beta \geq 70$
13. JPM port end cones and JLP port nadir may violate touch temperature constraints when $\beta > 60$ deg

WARNING (Cont)

ISS Constraints (Cont)

H. Electrical Shock

1. Stay ≥ 2 ft from ungrounded floating connectors if not unpowered
   - SSPTS connectors include NOD1 Stbd/Fwd HR 0130, Lab Stbd/Fwd HR 0273, PMA2 Stbd and Port
   - MBS Cross-Connect jumpers (translate past these using UMA handrails) Include S0 EVA Power Cables (inside S0 Bay 00 Face 4, Bay 01 Face 3) ESP2 jumper (inside S0 Bay 03 Face 4)
2. Do not touch SPDM CLPA 1 electrical connector prior to camera installation

WARNING (Cont)

Shuttle Constraints

A. Arcing/Molten Debris

1. Stay ≥ 2 ft from exposed EFGF connector when OBSS berthed, powered, and EFGF not grappled [PLB]
2. Stay ≥ 2 ft from exposed Stbd Fwd MPM contacts [PLB]
3. Stay above PLB sill when within 1 ft of powered ROEU connector [PLB]

B. Pinch

1. PRLA operation [PLB]

C. RF radiation exposure

1. Stay 3.28 ft from S-Band Antenna when powered
2. Stay 1 ft from top and side of UHF PLB Antenna radome surface when in high powered mode [ODS truss]
3. Stay 0.33 ft from top and side of UHF PLB Antenna radome surface when in low powered mode [ODS truss]
4. Remain below the level of the PLB door mold line for first 20 in Aft of Fwd bulkhead when S-Band Antenna powered [PLB]
5. Remain on the inboard side of the Stbd slidewire (sill handrails if slidewire not installed) for first 20 ft Aft of Fwd bulkhead when Ku-Band Antenna powered [PLB]

WARNING (Cont)

Shuttle Constraints (Cont)

D. Sharp Edges
1. PRLA grounding wipers [PLB]
2. LDRI baffles (also an entrapment hazard) [OBSS]
3. Keep hands away from SRMS EE opening and snares
4. TCS connector backshells have exposed threads [ODS]

E. Thermal
1. Illuminated PLB lights; do not touch
2. OBSS grapple fixture shafts/cams may be hot. Limit handling if required
3. Stay 27 ft from PRCS when powered
4. Stay 3 ft from VRCS when powered
5. Stay 3 ft from APU when operating

F. Contamination
1. Stay out of the immediate vicinity of leaking jet or APU

G. Lasers
1. Do not look at LDRI diffuser or LCS laser aperture window

EVA 2 TOOL CONFIG

EV1

EMU D-rings
- ❑❑ Ext on left side
- ❑❑ Ext on right side
- ❑❑ Waist Tether [right D-ring extender]
- ❑❑ 85-ft Safety Tether [right D-ring extender]

MWS
- ❑❑ Small Trash Bag [right inside]
- ❑❑ Adj tether
- ❑❑ RET (sm-sm) [left]
- ❑❑ RET(w/PIP pin) [right]
- ❑❑ 2 – Wire ties

- ❑❑ Swing Arm [right side]
  - ❑❑ PGT w/7/16-6-in ext s/n _____
    - ❑❑ RET (sm-sm)

- ❑❑ BRT [left side]
  - ❑❑ 2 – Wire ties (short)
  - ❑❑ RET (sm-sm)

❑❑ SAFER

EV3

EMU D-rings
- ❑❑ Ext on left side
- ❑❑ Ext on right side
- ❑❑ Waist Tether [right D-ring extender]
- ❑❑ 85-ft Safety Tether [right D-ring extender]

MWS
- ❑❑ Small Trash Bag [left inside]
  - ❑❑ Adj tether
    - ❑❑ Gap Spanner, 72-in
      - ❑❑ Adj tether
- ❑❑ Small Trash Bag [right inside]
- ❑❑ RET (sm-sm) [left]
- ❑❑ RET(w/PIP pin) [right]
- ❑❑ 2 – Wire ties

- ❑❑ Swing Arm [right side]
  - ❑❑ PGT w/7/16-6-in ext s/n _____
    - ❑❑ RET (sm-sm)

- ❑❑ BRT [left side]
  - ❑❑ 2 – Wire ties (short)
  - ❑❑ RET (sm-sm)

❑❑ SAFER

CREWLOCK

❑❑ Tether Ext on A\L D-ring

❑❑ RET (Lg-sm)
- ❑❑ Crewlock Bag #3
  - ❑❑ Adj tether [to outside of bag]
  - ❑❑ EV1 spare 85-ft ST [outside TPs]
  - ❑❑ EV3 spare 85-ft ST [outside TPs]
  - ❑❑ Ratchet Wrench (int RET #1)
    - ❑❑ 7/16-2-in rigid ext
  - ❑❑ Ratchet Wrench (int RET #2)
    - ❑❑ 7/16-2-in rigid ext
  - ❑❑ RET (w/PIP pin)
    - ❑❑ 7/16-18-in ext
  - ❑❑ RET (sm-sm or int RET #3)
    - ❑❑ EVA Camera w/bracket
  - ❑❑ RET (w/PIP pin) (for 6-in wobble)
  - ❑■ Gap Spanners, 72-in
    - ❑■ Gap Spanners, 45-in
  - ❑■ Gap Spanners, 72-in
    - ❑■ Gap Spanners, 45-in (buckles in the middle)

❑❑ RET (Lg-sm) (Attach to A/L D-ring ext)
- ■❑ APFR

NOTE: Prior to use, inspect the following hardware:
- ❑ RET cords for fraying
- ❑ Safety Tether & Waist Tether load alleviating straps: No red visible
- ❑ Sm Trash Bag: Bristle deformation/damage, after stowing tools in trash bag

Use Blue RETs Only

Tether Count:	(used)	(total) ISS qty
RET (sm-sm)	7	16
RET (w/PIP pin)	4	5
RET (Lg-sm)	2	8
Adj Tethers (sm-sm)	4	10
Adj Tethers (Lg-sm)	0	2
D-ring Extenders	5	6

Bag Color Key: 119 EVA Tools, Staging, Crewlock MWS

EVA 2 TOOL CONFIG (Cont)

CREWLOCK (Cont)

Staging Bag
- ❑❑ Fish Stringer #1
  - ❑❑ Wire Tie Caddy (hook #1)
    - ❑❑ 9 wire ties
  - ❑❑ Velcro/Tape Caddy (hook #2)
  - ❑❑ PGT (hook #3) s/n 1008
    - ❑❑ PGT Battery s/n _____
    - ❑❑ 7/16-in (wobble) Socket – 6 ext
  - ❑❑ Vise Grips (hook #4)
  - ❑❑ Ratchet Wrench (hook #5)
    - ❑❑ 7/16-in (rigid) Socket – 9 ext
  - ❑❑ Cheater Bar (hook #6)
  - ❑❑ Hammer (hook #7)
  - ❑❑ 55-ft Safety Tether (to strap)

- ❑❑ Fish Stringer #2
  - ❑❑ Connector Cleaner Tool Kit (Hook #1)
  - ❑❑ Pin Straightener Tool (Hook #2)
  - ❑❑ Probe (Hook #3)
  - ❑❑ Prybar (Hook #4)
  - ❑❑ Needle Nose Pliers (Hook #5)
  - ❑❑ Torque Wrench w/bag
  - ❑ (set to 31) (Hook #6)
  - ❑❑ Right Angle Drive (Hook #7)
  - ❑❑ Long-Duration Tie-Down Tether (to strap)
  - ❑❑ Long-Duration Tie-Down Tether (to strap)
  - ❑❑ MWS Key Strap Assy (on Wire Tie to strap)
  - ❑❑ EVA Camera (Int RET to strap)

- ❑❑ RET (Lg-sm)
  - ❑❑ Sm ORU Bag
    - ❑❑ Fish Stringer #3 (May be in Staging Bag)
      - ❑❑ Cnctr Insulating Sleeve Size 21/25 (Hook #1)
      - ❑❑ Cnctr Insulating Sleeve Size 21/25 (Hook #2)
      - ❑❑ Cnctr Insulating Sleeve Size 21/25 (Hook #3)
      - ❑❑ Cnctr Insulating Sleeve Size 21/25 (Hook #4)
      - ❑❑ Cnctr Insulating Sleeve Size 33/37 (Hook #5)
      - ❑❑ Cnctr Insulating Sleeve Size 33/37 (Hook #6)

CREWLOCK (Cont)

IV Bag
- ❑❑ 2 – Towel
- ❑❑ Contamination Detection Kit
- ❑❑ 2 – GP Caddy
  - ❑❑ Thermal Mittens (1 pair)
- ❑❑ RET (sm-sm) (Black)
  - ❑❑ Socket Caddy
  - ❑❑ 1/2-in (wobble) Socket – 8 ext
  - ❑❑ 7/16-in (wobble) Socket – 6 ext
- ❑❑ 2 – DCM Plug (SAFER Hardmount)
- ❑❑ 2 – RET (sm-sm, black)

EQUIPMENT LOCK

Med ORU Bag
Empty

Med ORU Bag
- ❑ Fish Stringer
  - ❑ JLP GPS Ant B

- ❑ WETA

> ❑ Review PGT ops
> - Report "green light" (for torque down ops)
> - Report torque and turns
> - Expect LOTORQ fault msg, Fault LED and Red LED for bolt release ops

EQUIPMENT LOCK(Cont)

Mesh Bag #1 (119 EVA Tools)
- ❑ WIF Adapter
- ❑ 2 – EVA Wipes
- ❑ Grease Gun
  - ❑ EVA Wipe & Wire Tie
- ❑ 2 – Wire Ties (short)
- ❑ 2 – Wire Ties (long)
- ❑ BRS Pin Tool w/Sheath
- ❑ Ziplock w/Grease Gun Caps

Mesh Bag #2 (Done Tools)
- ❑ 5/8-7.8-in extension
- ❑ 5/8-7.8-in extension
- ❑ Round TM w/5/8-in Prd Socket
- ❑ Socket Caddy
- ❑ Torque Wrench Bag
- ❑ Cannon Connector Tool
- ❑ Cannon Connector Tool
- ❑ Cnctr Insulating Sleeve Size 33/37

Mesh Bag #3 (Transfer to Shuttle)
- ❑ Locking Strut Aid
- ❑ Locking Strut Aid
- ❑ Locking Strut Aid
- ❑ Locking Strut Aid
- ❑ Torque Wrench (s/n 1007)

Crewlock Bag #1 (EVA 3)
- ❑ RCC Gap Gauge (Int RET #1)
- ❑ Adj tether (Int RET #2)
  - ❑ EVA Wipe
  - ❑ EVA Wipe

Crewlock Bag #2 (EVA 3)
- ❑ RPCM (Int RET #1)
- ❑ Round Scoop (Int RET #2)

Crewlock Bag #4 (EVA 3)
- ❑ RPCM (Int RET #1)
- ❑ Round Scoop (Int RET #2)

Bag Color Key: 119 EVA Tools, Staging, Crewlock MWS Shuttle

EVA 2 A/L EGRESS AND SETUP (00:50)

IV	EV1 – Swanson (FF)	EV3 – Acaba (FF)
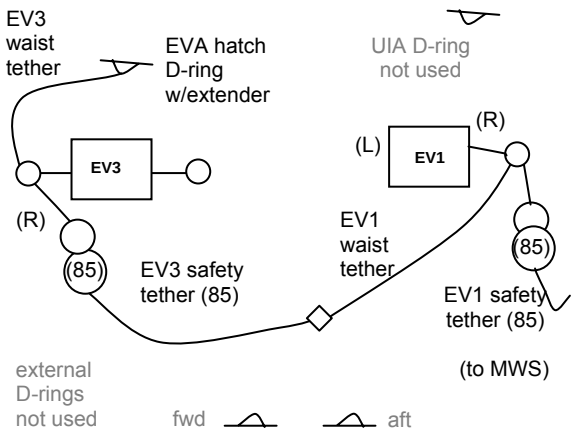 1 – 85-ft A/L tether – EV1 1 – 85-ft A/L tether – EV3 > EMU 1 – 85-ft tether – EV1 1 – 85-ft tether – EV3 > Crewlock Bag 3 1. Post crew egress: WVS Software: Select page – RF Camera sel 'Advanced controls' S-Band level (two) – max (Required after A/L egress) NOTE Sunrise/Sunset checks • √Helmet lts, visor, as reqd • √Gloves & Gauntlets • √Tool, MWS tethers • √MWS, BRT latches	INITIAL CONFIG Verify: ❑ EV1 right waist tether connected to EV3's 85-ft safety tether ❑❑ √Gate closed (both hooks) ❑❑ √Hook locked (both hooks) ❑ √Reel unlocked EGRESS (00:20) 1. Open hatch thermal cover 2. Egress crewlock 3. Receive C/L bag #3 from EV3 and attach to BRT 4. Verify EV3 SAFER Configuration: ❑ √R Handle down (HCM door – Closed) ❑ √L Handle down (MAN ISO Valve – Open) 5. Translate to P1/P3 tether swap location (P1 nadir-outboard, near CP9) 6 Attach EV1 85-ft safety tether hook to P1 HR 3652 out of EV3s translation path (nadir of P1 FHRC) ❑ √Gate closed ❑ √Hook locked ❑ √Reel unlocked 7. Attach EV3 85-ft safety tether hook to P1 HR 3651 ❑ √Gate closed ❑ √Hook locked 8. Release EV1 waist tether from EV3 safety tether 9. Give EV3 GO to release EV3 waist tether from Airlock D-ring 10. Translate to LAB WIF 7	INITIAL CONFIG Verify: ❑ EV3 right waist tether connected to Airlock D-ring extender ❑ √Gate closed ❑ √Hook locked EGRESS (00:20) 1. Transfer C/L bag #3 to EV1; RET(Lg-sm) to A/L D-ring ext 2. Egress crewlock 3. Verify EV1 SAFER Configuration: ❑ √R Handle down (HCM door – Closed) ❑ √L Handle down (MAN ISO Valve – Open) 4. Perform translation adaptation as reqd 5. ❑ √Reel unlocked 6. On EV1 GO, release right waist tether from Airlock D-ring 7. Close hatch thermal cover

EVA 2 A/L EGRESS AND SETUP (00:50) (Cont)

IV

View of P6 IEA (Non-Keel Side)

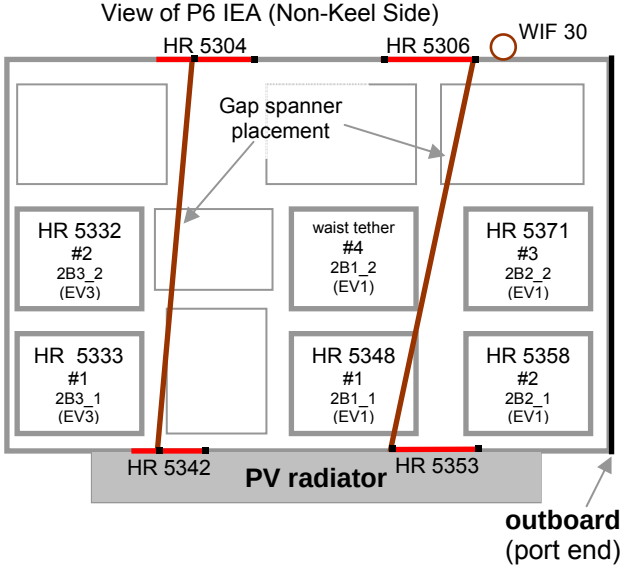

Inspect bolts on Adapter Plate not WIF (2 of 4 shown)

EV1 – Swanson (FF)

SETUP (00:30)

1. Attach C/L bag #3 to APFR
2. Retrieve **APFR [RR,D,12]** and install on BRT
3. Fairlead at P1 HR 3654
4. Translate zenith to P5 HR 5202
5. Tether swap to spare 85-ft ST
   - ❑ ❑ √Gate closed (both hooks)
   - ❑ ❑ √Hook locked (both hooks)
   - ❑ √Reel unlocked
6. Attach old ST to HR 5202 and unlock reel
7. Retrieve EV3 spare 85-ft ST, stow on P5 HR 5226

WARNING
Outboard MT rail attachment lug near P6 handrail 5333 and gap spanner may be sharp

8. Translate to P6 (non-keel side IEA), WIF 30
9. Install **APFR [12,RR,D,12]** in WIF 30
   - ❑ √Blk-Blk, pull/twist test
10. Remove C/L bag #3 from APFR
11. Temp stow C/L bag #3 on HR 5306 & HR 5305

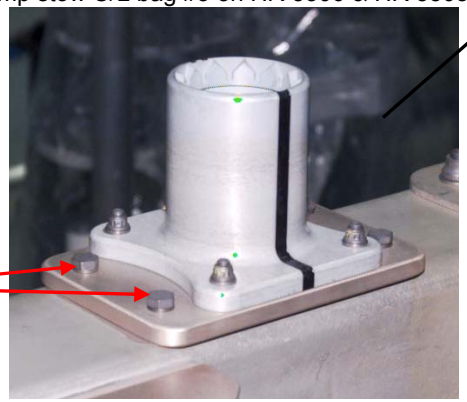

EV3 – Acaba (FF)

SETUP (00:30)

1. Translate to LAB WIF 11
2. Retrieve **APFR [GG,F,6]** from LAB WIF 11
3. Translate nadir to P5 HR 5226
4. Perform safety tether swap on P5 HR 5218
   - ❑ ❑ √Gate closed (both hooks)
   - ❑ ❑ √Hook locked (both hooks)
   - ❑ √Reel unlocked
5. Attach old ST to HR 5218 and unlock reel
6. Translate to P6 (long spacer) WIF 10
7. Inspect P6 WIFs 9 and 10 baseplates
   - ❑ √4 fasteners present and flush with WIF baseplate
   - ❑ √No visible gap at WIF/structural interface
8. Install **APFR [12,GG,F,6]** in P6 WIF 10
   - ❑ √Blk-Blk, pull/twist test
   - ❑ √WIF for any motion
9. Translate to P6 (non-keel side IEA)

EVA 2 A/L EGRESS AND SETUP (00:50) (Cont)

IV	EV1 – Swanson (FF)	EV3 – Acaba (FF)
2. Inform **MCC-H** EV crew ready for BGA 4A rotation	12. Inform IV when ready for BGA 4A rotation (EV on P6 IEA)	10. Inform IV when ready for BGA 4A rotation (EV on P6 IEA)
	NOTE Loop gap spanners around HR and hook back onto strap	
	13. Retrieve ratchet wrench from C/L bag #3 14. Retrieve gap spanner from C/L bag #3 and fully extend. Fairlead on APFR as reqd 15. Install Gap Spanner across IEA, HR 5306-5353 (Route strap around inboard stanchion of HR 5353, and outboard stanchion of HR 5306) (Rotate buckle of gap spanner 180 deg to ensure proper tension)	11. Retrieve ratchet wrench from C/L bag #3 12. Retrieve gap spanner from C/L bag #3 and fully extend 13. Install Gap Spanner across IEA, HR 5304-5342 (Route strap around inboard stanchion of HR 5342, and around inboard stanchion of HR 5304) (Rotate buckle of gap spanner 180 deg to ensure proper tension)
	16. Check gloves and gauntlets	14. Check gloves and gauntlets

EVA 2 BATTERY PREP (01:10)

IV	EV1 – Swanson (FF)	EV3 – Acaba (FF)
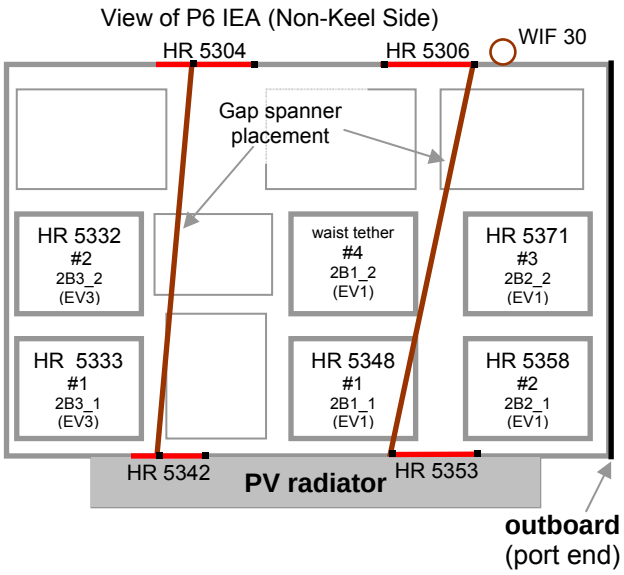	CAUTION • When breaking torque, release H1 before H2 (jacking bolt) • Do not exceed more turns on H2 than H1 • When re-torquing bolts, H2 must be tightened before H1 RELEASE TORQUE ON BATTERY BOLTS [EV1 Battery List (4): 2B1_1, 2B2_1, 2B2_2, 2B1_2] 1. Break torque on H1 and H2: Ratchet wrench, ccw: a. Release torque on H1 bolt (expect ~31.7 ft-lb), 1 turn b. Release torque on H2 bolt (expect ~33.5 ft-lb), ½ turn 2. Re-torque H2 and H1: Ratchet wrench, cw (Set between 1 & 60 ft-lb): a. Tighten H2 bolt b. Tighten H1 bolt 2B1_1: Release ☐ H1 ☐ H2 (use HR 5348) Tighten ☐ H2 ☐ H1 2B2_1: Release ☐ H1 ☐ H2 (use HR 5358) Tighten ☐ H2 ☐ H1	RELEASE TORQUE ON BATTERY BOLTS [EV3 Battery List (2): 2B3_1, 2B3_2] 1. Break torque on H1 and H2 (assist EV1, as reqd): 2. Re-torque H2 and H1: 2B3_1: Release ☐ H1 ☐ H2 (use HR 5333) Tighten ☐ H2 ☐ H1 2B3_2: Release ☐ H1 ☐ H2 (use HR 5331) Tighten ☐ H2 ☐ H1

EVA 2 BATTERY PREP (01:10) (Cont)

IV	EV1 – Swanson (FF)	EV3 – Acaba (FF)
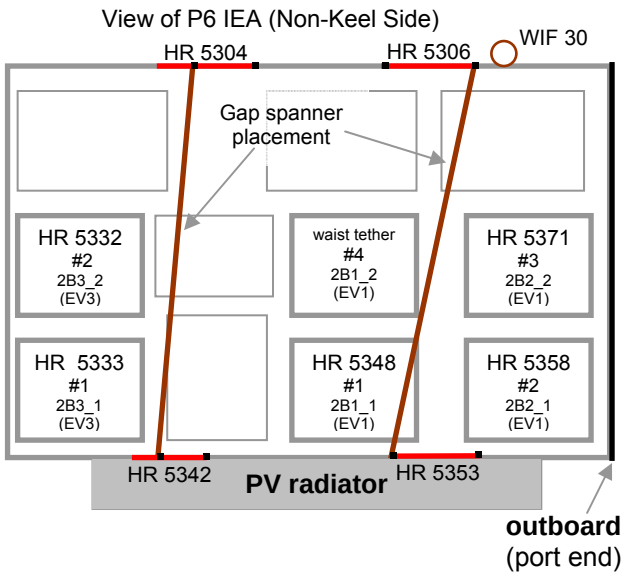 1. Inform **MCC-H** EV crew ready for BGA 2B rotation <u>Crewlock Bag #3 Inventory</u> ❑ Adj tether [to outside of bag] ❑ Ratchet Wrench (int RET #1) ❑ 7/16-2-in rigid ext ❑ Ratchet Wrench (int RET #2) ❑ 7/16-2-in rigid ext ❑ RET (w/PIP pin) ❑ 7/16-18-in ext ❑ RET (sm-sm or int RET #3) ❑ EVA Camera w/bracket ❑ RET (w/PIP pin) (for 6-in wobble)	2B2_2: Release ☐ H1 ☐ H2 (HR 5371) Tighten ☐ H2 ☐ H1 2B1_2: Release ☐ H1 ☐ H2 (waist tether) Tighten ☐ H2 ☐ H1 3. Stow ratchet in C/L bag #3 4. Reconfigure **APFR [12,QQ,F,12]** 5. Check gloves and gauntlets 6. Retrieve C/L bag #3 and stow on BRT 7. Inform IV when ready for BGA 2B rotation (EV clear of P6 IEA) 8. Translate to P5 HR 5202 and swap to A/L 85-ft ST ❑ √Gate closed ❑ √Hook locked ❑ √Reel unlocked 9. Attach safety tether to MWS 10. Temp stow C/L bag #3 inboard of UCCAS on P3 HR 3800 (Inboard Stanchion) 11. Attach safety tether to C/L bag #3 12. Translate to P3 Nadir UCCAS	3. Stow ratchet in C/L bag #3 4. Inventory C/L bag #3 5. Check gloves and gauntlets 6. Inform IV when ready for BGA 2B rotation (EV clear of P6 IEA) 7. Translate to P5 HR 5218 and swap to A/L 85-ft ST ❑ √Gate closed ❑ √Hook locked ❑ √Reel unlocked 8. Attach safety tether to MWS 9. Translate to C/L bag #3 at P3 HR 3800 10. Attach safety tether to C/L bag #3 11. Translate to P3 Nadir UCCAS

EVA 2 P3 NADIR UCCAS DEPLOY (01:15)

IV	EV1 – Swanson/EV3 – Acaba
1. Verify CP9 camera group aimed at UCCAS Deploy Clevis Bracket Bolts Released [ ] 1 [ ] 2 [ ] 3 [ ] 4 Bolt [ ] [ ] [ ] [ ]	P3 Nadir UCCAS DEPLOY CAUTION Avoid inadvertent contact with grapple fixture shafts and target pins. ❑ Swivel Deploy Clevis Bracket/Release Pins (EV1) 1. RET to Deploy Clevis Bracket 2. Swivel Deploy Clevis Bracket: (4 bolts) 10 turns on all bolts except pivot bolt, 8 turns ❑ **PGT [B7** 25.5 ft-lb, **CCW2** 30 RPM, 30.5**]**-7/16-6-in ext 3. Temp stow Deploy Clevis Bracket
	❑ Install Gap Spanner (EV3) 4. Attach gap spanner to yoke 5. Attach Adj/Gap Spanner/Adj tether to hinge line HR 3851 NOTE: Route under braces and attach to outboard portion of yoke
	❑ Release Yoke ADP and PIP Pin (EV1) CAUTION When attempting to remove the Yoke PIP pin and ADP, do not impart more than 10 lbf Yoke ADP does not have a stowage hole. Do not close ADP lock bracket when ADP is not inserted in a stowage/clevis hole 6. Release yoke PIP pin, secure using pre-installed wire tie → If unsuccessful, go to step 8, else skip 8 7. Release yoke ADP, secure using pre-installed wire tie → If unsuccessful, go to step 8, else skip 8
	❑ ADP/PIP Pin Contingency Removal 8. Complete step 8 only if step 6 and/or 7 were no joy: ❑ Loosen Stow Clevis Bracket bolts (4) **PGT [B7** 25.5 ft-lb, **CCW2** 30 RPM, 30.5**]**-7/16-6-in ext, approx 4 turns each ❑ Re-attempt removal of yoke PIP pin and/or yoke ADP; secure using pre-installed wire tie
	❑ Hinge Line Prep (EV3) 9. Remove hinge line ADPs (2), insert in stowage hole (toward station forward), confirm ADP closed ❑ Inboard ❑ Outboard

EVA 2 P3 NADIR UCCAS DEPLOY (01:15) (Cont)

IV	EV1 – Swanson/EV3 – Acaba
	❑ Reposition Braces (EV3) 10. Release SARJ Launch Bolt by hand, approx 3 turns ccw necessary If reqd, **PGT** [**B6** 24.0 ft-lb, **CCW2** 30 RPM, 30.5] 11. Release SARJ Brace (cup-cone bolt), stop on turns; 35 turns, do not exceed 37 ❑ **PGT [B6** 24.0 ft-lb, **CCW3** 60 RPM, 30.5**]**-7/16-6-in ext (use **A7, CCW2** if desired to go to hardstop) 12. Attach SARJ Brace to Diagonal Strut, hand tighten SARJ Launch Bolt 1 turn cw 13. Release Diagonal Brace (cup-cone bolt), stop on turns; 35 turns, do not exceed 37 ❑ **PGT [B6** 24.0 ft-lb, **CCW3** 60 RPM, 30.5**]**-7/16-6-in ext (use **A7, CCW2** if desired to go to hardstop) CAUTION Do not lift diagonal brace more than ~7 deg out of rotation plane to prevent damage to hinge end 14. Guide Diagonal Brace and temp stow with tether to HR 3844 15. Swing yoke inside to provide room for removal of stow clevis bracket
Stow Clevis Bracket Bolts Released | | 5 | 6 | 7 | 8 | | Bolt | | | | |	❑ Swivel Stow Clevis Bracket (EV1) 16. RET to Stow Clevis Bracket 17. Swivel Stow Clevis Bracket: (4 bolts) 10 turns on all bolts except pivot bolt, 8 turns ❑ **PGT [B7** 25.5 ft-lb, **CCW2** 30 RPM, 30.5**]**-7/16-6-in ext 18. Temp stow Stow Clevis Bracket
SYNC POINT	❑ Deploy UCCAS to Detent (EV3) 19. Deploy UCCAS to detent, Tend with Adj/Gap Spanner/Adj Lead with yoke (10 deg past vertical) 20. Reposition Adj/Gap Spanner/Adj, at hinge end to take up slack
SYNC POINT Stow Clevis Bracket: | Bolt # | 5 | 6 | 7 | 8 | | Torque | | | | | | Turns | | | | |	❑ Reinstall Stow Clevis Bracket (EV1) ** THIS MUST BE DONE BEFORE UCCAS IS MOVED FROM DETENT TO FINAL DEPLOY** 21. Finger start Stow Clevis Bracket bolts (4), approx 1-2 turns 22. Engage Stow Clevis Bracket bolts (4) to hard stop, expect 10 turns ❑ **PGT [B2** 16.0 ft-lb, **CW2** 30 RPM, 30.5**]**-7/16-6-in ext ← Report torque and turns 23. Retrieve RET from bracket

IV	EV1 – Swanson/EV3 – Acaba
Record Torque and Turns for the Brace Bolts: Bolt | Diagonal | SARJ Brace Torque | | Turns | |	❑ Reposition Braces (EV3) ****** THIS MUST BE DONE BEFORE UCCAS IS MOVED FROM DETENT TO FINAL DEPLOY****** CAUTION Do not lift diagonal brace more than ~7 deg out of rotation plane to prevent damage to hinge end 24. Move Diagonal Brace into position for re-installation 25. Engage Diagonal Brace (cup-cone bolt) to hard stop, approx 35 turns ❑ **PGT [B2** 16.0 ft-lb, **CW2** 30 RPM, 30.5**]**-7/16-6-in ext ← Report torque and turns 26. Release SARJ Brace via SARJ Launch Bolt by hand, approx 1 turn ccw necessary 27. Engage SARJ Brace (cup-cone bolt) to hard stop, approx 38 turns ❑ **PGT [B2** 16.0 ft-lb, **CW2** 30 RPM, 30.5**]**-7/16-6-in ext ← Report torque and turns 28. Re-engage SARJ Launch Bolt bolt for temp stow; hand tighten cw 2-3 turns 29. Retrieve tether from brace temp stow location
Record Torque and Turns of Deploy Clevis Brackets: Bolt # | 1 | 2 | 3 | 4 Initial Torque | | | | Turns | | | | Final Torque | | | |	❑ Re-install Deploy Clevis Bracket (EV1) ****** THIS MUST BE DONE BEFORE UCCAS IS MOVED FROM DETENT TO FINAL DEPLOY****** 30. Finger start Deploy Clevis Bracket bolts (4), approx 1-2 turns 31. Engage Deploy Clevis Bracket bolts (4) to hard stop, expect 10 turns ❑ **PGT [B5** 22.0 ft-lb, **CW2** 30 RPM, 30.5**]**-7/16-6-in ext ← Report torque and turns 32. Apply Final Torque to Deploy Clevis Bracket bolts (4) in Ratchet Mode ❑ **PGT [RCW**, 30.5**]**-7/16-6-in ext, two clicks each bolt 33. Retrieve RET from bracket
	❑ Move UCCAS From Detent to Final Deploy Position 34. Move platform from detent into install position, tend with Adj/Gap Spanner/Adj 35. Install yoke into Deploy Clevis Bracket ❑ Release wire tie securing PIP pin and ADP to yoke CAUTION When attempting to install the Yoke PIP pin and ADP, do not impart more than 10 lbf ❑ Install yoke ADP, √lock bracket engaged → If unsuccessful, go to step 36, else skip 36 ❑ Install yoke PIP pin → If unsuccessful, go to step 36, else skip 36

EVA 2 P3 NADIR UCCAS DEPLOY (01:15) (Cont)

<table>
<tr><th>IV</th><th>EV1 – Swanson/EV3 – Acaba</th></tr>
<tr><td>IV: Obtain GO from MCC-H for RTL checkout

<table>
<tr><td>RTL #</td><td>1</td><td>2</td><td>3</td></tr>
<tr><td>PIP Pin</td><td></td><td></td><td></td></tr>
<tr><td>Test Complete</td><td></td><td></td><td></td></tr>
</table>

<u>EV1</u>
❑ Small Trash Bag [right inside]
❑ Adj tether
❑ RET (sm-sm) [left]
❑ RET(w/PIP pin) [right]
❑ Swing Arm [right side]
❑ PGT w/7/16-6-in ext
❑ RET (sm-sm)
❑ BRT [left side]
❑ RET (sm-sm)

<u>EV3</u>
❑ Small Trash Bag [left inside]
❑ Adj tether
❑ Gap Spanner, 72-in
❑ Adj tether
❑ Small Trash Bag [right inside]
❑ RET (sm-sm) [left]
❑ RET(w/PIP pin) [right]
❑ Swing Arm [right side]
❑ PGT w/7/16-6-in ext
❑ RET (sm-sm)
❑ BRT [left side]
❑ RET (sm-sm)

2. Inform MCC-H EV crew ready for Port SARJ rotation</td>
<td>❑ <u>ADP/PIP Pin Contingency Install</u>
36. Complete step 36 only if step 35 was no joy:
❑ Loosen Deploy Clevis Bracket bolts (4), approx 4-6 turns
❑ Some bolts will require Torque Wrench 2-in ext at 31 ft-lb
❑ Remaining bolts, PGT [RCW, 30.5]-7/16-6-in ext
❑ Re-attempt ADP installation
❑ Re-attempt PIP pin installation
❑ Engage Deploy Clevis Bracket bolts (4) to hard stop, approx 4-6 turns
❑ Some bolts will require RAD (attempt w/fingers first) PGT [A7 9.2 ft-lb, CW2 30 RPM, 30.5]-RAD w/7/16-2-in ext (count turns at bolt head)
❑ Remaining bolts, PGT [B5 22.0 ft-lb, CW2 30 RPM, 30.5]-7/16-6-in ext
❑ Apply Final Torque
❑ Some bolts will require Torque Wrench 2-in ext at 31 ft-lb
❑ Remaining bolts, PGT [RCW, 30.5]-7/16-6-in ext</td></tr>
<tr><td></td><td>❑ <u>Clean Up/Prep UCCAS</u>
37. Translate under UCCAS UMA
38. Tether to hitch pin from EVA OVERRIDE anti-rotation cap, remove hitch pin
39. ❑ Remove anti-rotation cap and stow in trash bag
40. Translate to each Guide Vane (3) and perform:
❑ Remove launch restraint PIP pin from guide vane; stow in trash bag
❑ On MCC-H GO, depress and hold RTL lever for 15 sec, then release
❑ Verify with MCC-H good checkout, move to next guide vane
41. Release Adj/Gap Spanner/Adj fully extend and stow in trash bag
42. Translate to EBCS Target and perform:

<u>CAUTION</u>
EBCS target has finished surface that is susceptible to damage by contact

❑ Verify both EV crewmembers are clear of target area
❑ Remove target cover, stow on backside of target assembly
43. Glove check
44. Perform tool inventory
45. Inform IV when ready for port SARJ rotation (Crew, tools, and tethers clear of SARJ and braces installed)
46. EV3 – Translate to P1/P3 location for FLUID JUMPER INSTALL
EV1 – Translate to P1 RBVM MLI REPAIR location</td></tr>
</table>

EVA 2 P1 RBVM MLI REPAIR, P1/P3 FLUID JUMPER INSTALL, AND FHRC P-CLAMP RELEASE (01:05)

IV	EV1 – Swanson (FF)	EV3 – Acaba (FF)
DEMATE QD 1. √Forward white band visible, button up 2. Demate QD (pull back on release ring) MATE QD 1. Inspect QDs for FOD or damage 2. √Detent button is up 3. √Forward white band is NOT visible 4. Assess side loads 5. Mate QD. √Forward white band is visible 6. Perform snap back test (√Fwd white band is visible) 7. Perform pull test 8. Perform gap check (visual) 1. Request EV3 to perform survey of jumper connections OPEN VALVE 1. Press button, move bail forward (open valve) 2. √Aft white band visible, button up 3. Verify detent button can be depressed	P1 RBVM MLI REPAIR (00:15) CAUTION Do not impart loads into radiator beam when greater than 130 inches from TRRJ center (outboard edge of the outboard trunnion scuff plate). If inadvertent kick load is applied anywhere along the radiator beam, wait 2 min to allow the response to dissipate 1. Translate to P1 outboard 2. Translate to P1 outboard RBVM; go zenith at Bay 18 (Y_0 9795) 3. BRT to P3 HR 3804 or 3805 4. Reinstall FQD MLI on M1/F151 5. Install wire tie around FQD MLI 6. Perform WVS survey of RBVM 7. Check gloves and gauntlets 8. If Crewlock Bag #3 is by fluid jumper, retrieve and place on BRT 9. Translate to P1 FHRC for P-Clamp Release if PET < 04:30	P1/P3 FLUID JUMPER INSTALL (00:30) 1. Translate to P1/P3 Face 6 (nadir) interface 2. Open shroud on P1 nadir umbilical tray CAUTION QDs exposed to direct sunlight can overtemp in 20 min. Shading by EMU or thermal shroud can lengthen acceptable time with bootie removed 3. For QD F187, perform DEMATE QD steps (F187 is on M1 panel A504) 4. BRT to HR 3688 5. Open thermal bootie and remove QD cap from M3 on P1 panel A503. Stow cap in trash bag 6. BRT to HR 3810 7. Open thermal bootie and remove QD cap from M1 on P3 panel A501. Stow cap in trash bag 8. Open TA clamp 9. BRT to HR 3688 10. RET to jumper 11. For QDs F186, perform DEMATE QD steps (F186 is on M2 panel A503) 12. Perform MATE QD steps to mate QD F186 to M3 on P1 panel A503 13. For QD F186, perform OPEN VALVE steps 14. Reinstall thermal bootie 15. BRT to HR 3810 16. Perform MATE QD steps to mate QD F187 to M1 on P3 panel A501 17. For QD F187, perform OPEN VALVE steps 18. Reinstall thermal bootie 19. Close TA clamps, as reqd 20. Perform WVS survey of jumper connections 21. Replace P1 nadir umbilical tray shroud 22. Check gloves and gauntlets 23. Retrieve C/L bag #3, if reqd 24. Translate to P1 for FHRC P-Clamp Release if PET < 04:30

EVA 2 P1 RBVM MLI REPAIR, P1/P3 FLUID JUMPER INSTALL, AND FHRC P-CLAMP RELEASE (01:05) (Cont)

IV

P1 FHRC P-Clamps:

Hose Box

√	P-Clamp	Tool	Socket
	1	PGT	6-in ext
	2	PGT	6-in ext
	3	Ratchet	2-in ext
	4	PGT	6-in ext
	5	PGT	6-in ext
	6	Ratchet	2-in ext

Stinger

√	P-Clamp	Tool	Socket
	1	PGT	6 or 18-in ext
	2	PGT	6 or 18-in ext
	3	PGT	6 or 18-in ext
	4	PGT	6 or 18-in ext
	*5	PGT	18-in ext
	^6	PGT	6 or 18-in ext

*18-in required for this bolt
^18-in ext doable w/difficulty

- ❑ Crewlock Bag #3
  - ❑ Adj tether [to outside of bag]
  - ❑ EV1 spare 85-ft ST [outside TPs]
  - ❑ EV3 spare 85-ft ST [outside TPs]
  - ❑ Ratchet Wrench (int RET #1)
    - ❑ 7/16-2-in rigid ext
  - ❑ Ratchet Wrench (int RET #2)
    - ❑ 7/16-2-in rigid ext
  - ❑ RET (w/PIP pin)
    - ❑ 7/16-18-in ext
  - ❑ RET (sm-sm or int RET #3)
    - ❑ EVA Camera w/bracket
  - ❑ RET (w/PIP pin) (for 6-in wobble)

1. Check with **MCC-H**: S1 TRRJ locked

EV1 – Swanson (FF)

RELEASE FHRC P-CLAMPS (00:50)
Hose Box (Outboard)

1. Temp stow C/L Bag #3 on Nadir FHRC HR, if reqd
2. Retrieve ratchet wrench from C/L bag
3. **PGT [A7** 9.2 ft-lb, **CCW2** 30 rpm, 30.5**]**-7/16-6-in ext: Release Hose Box P-clamps (6). Start at end furthest from QD, ~7-12.5 turns
4. Check gloves and gauntlets

PORT SIDE CLEANUP

5. Stow ratchet wrench in C/L bag
6. Retrieve Crewlock Bag #3 and attach to BRT
7. Perform tool inventory
8. Translate P1 HR 3652
9. Prepare Safety Tether for S3 PAS deploy
   - ❑ On EV3 GO: Connect EV1 Waist Tether to EV3 Safety Tether (while EV3 safety tether anchor remains on HR)
   - ❑ On EV3 GO: Release EV3 Safety Tether from P1 HR (3651)
   - ❑ ❑ √Gate closed (both hooks)
   - ❑ ❑ √Hook locked (both hooks)
   - ❑ Release EV1 Safety Tether from P1 HR (3652)
10. On IV GO: Translate to S1 HR (3214)

EV3 – Acaba (FF)

RELEASE FHRC P-CLAMPS (00:35)
Stinger/Torque Box (Inboard)

1. Temp stow C/L bag #3 on Nadir FHRC HR, if reqd
2. Retrieve PGT and install 18-in ext from crewlock bag
3. **PGT [A7** 9.2 ft-lb, **CCW2** 30 rpm, 30.5**]**-7/16-18-in ext: Release Torque Box P-clamps (6), ~7-12.5 turns
4. Stow 7/16-18-in ext in Crewlock Bag
5. Install 6-in extension on PGT
6. Check gloves and gauntlets

PORT SIDE CLEANUP

7. Translate to Airlock
8. Complete safety tether re-config at A/L
   - ❑ Connect EV3 waist tether to A/L D-ring ext
   - ❑ √Gate closed
   - ❑ √Hook locked
9. Give EV1 GO to attach Waist Tether to EV3 Safety Tether
10. Give GO to EV1 to release EV3 safety tether anchor

EVA 2 P1 RBVM MLI REPAIR, P1/P3 FLUID JUMPER INSTALL, AND FHRC P-CLAMP RELEASE (01:05) (Cont)

IV	EV1 – Swanson (FF)	EV3 – Acaba (FF)
	11. Set safety tether anchor (for both EV1/2): ❑ Attach EV1 safety tether anchor to S1 HR (3214) ❑ √Gate closed ❑ √Hook locked ❑ √Reel unlocked ❑ Attach EV3 safety tether anchor to S1 HR (3215) ❑ √Gate closed ❑ √Hook locked 12. Release EV1 waist tether from EV3 safety tether 13. Give EV3 GO to release EV3 waist tether from A/L D-ring	11. ❑ √Reel Unlocked 12. On EV1 GO, release waist tether from A/L D-ring 13. Close hatch thermal cover
	WARNING 2-ft Keep-Out Zone for floating cables between MT and MBS. Stay on UMA handrails during translation underneath MT	
	14. Translate to S3 Outboard Zenith PAS 15. Temp stow C/L bag on S3 HR 3056	14. Translate to S3 Outboard Zenith PAS

EVA 2 P1 FHRC P-CLAMP RELEASE – TASK DATA

FHRC P-Clamps – Hose Box (Outboard)

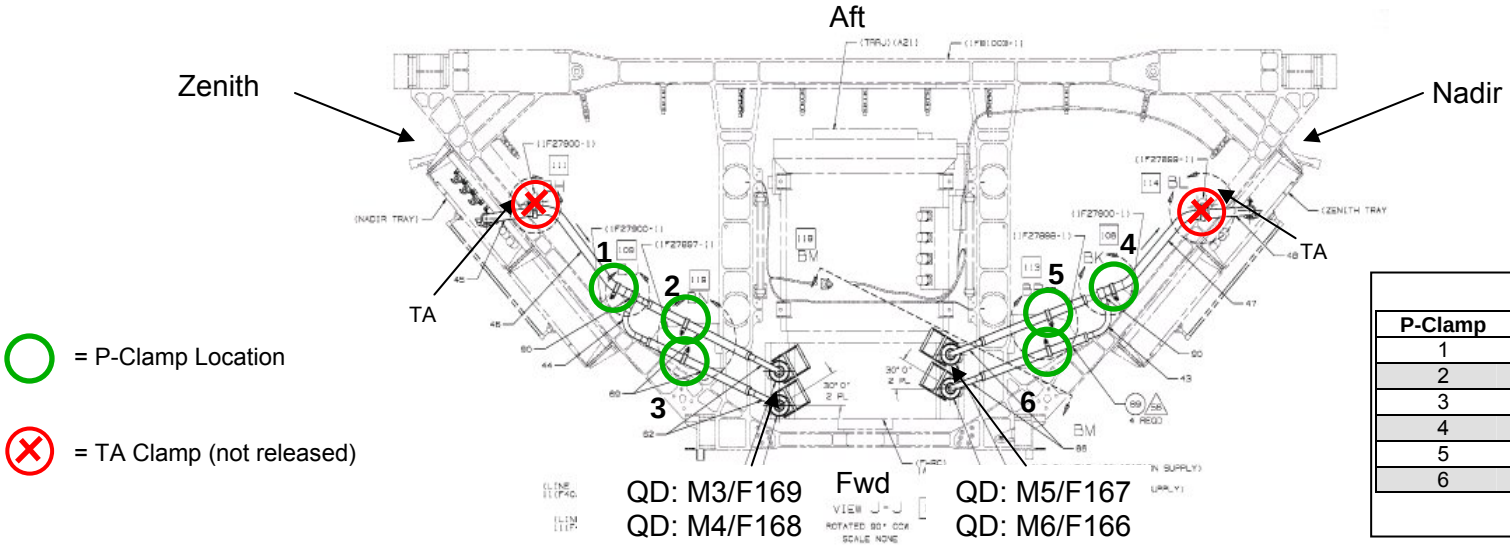

Hose Box

P-Clamp	Tool	Socket
1	PGT	6-in ext
2	PGT	6-in ext
3	Ratchet	2-in ext
4	PGT	6-in ext
5	PGT	6-in ext
6	Ratchet	2-in ext

FHRC P-Clamps – Stinger (Inboard)

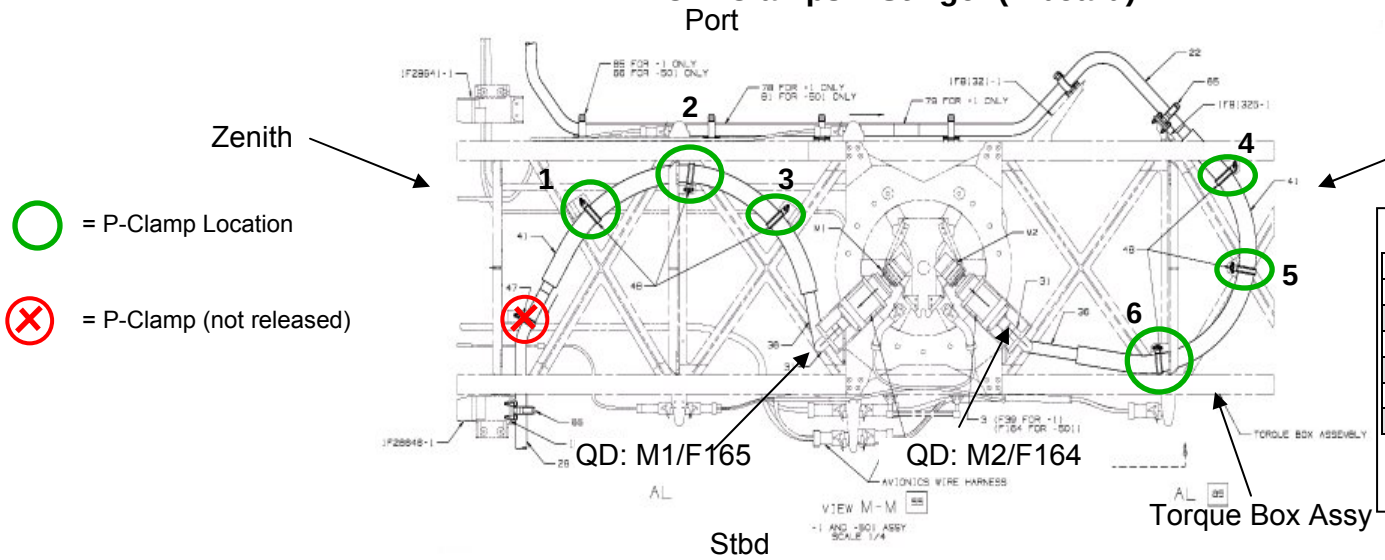

Stinger

P-Clamp	Tool	Socket
1	PGT	6 or 18-in ext
2	PGT	6 or 18-in ext
3	PGT	6 or 18-in ext
4	PGT	6 or 18-in ext
*5	PGT	18-in ext
^6	PGT	6 or 18-in ext

*18-in required for this bolt
^18-in ext doable w/difficulty

EVA 2 S3 OUTBOARD ZENITH PAS DEPLOY (01:00)

<table>
<tr><th>IV</th><th>EV1/2</th></tr>
<tr><td>1. Verify S3/S4 SARJ locked with MCC-H

2. Verify SSRMS Camera aimed at PAS

Deploy Clevis Bracket Bolts Released
<table>
<tr><td></td><td>1</td><td>2</td><td>3</td><td>4</td></tr>
<tr><td>Bolt</td><td></td><td></td><td></td><td></td></tr>
</table></td><td>On IV GO: <u>S3 PAS DEPLOY – OUTBOARD ZENITH</u>

<u>CAUTION</u>
Avoid inadvertent contact with grapple fixture shafts and target pins.

❑ <u>Swivel Deploy Clevis Bracket/Release Pins</u> (EV1)
1. RET to Deploy Clevis Bracket
2. Swivel Deploy Clevis Bracket: (4 bolts) 10 turns on all bolts except pivot bolt, 8 turns
❑ PGT [B7 25.5 ft-lb, CCW2 30 RPM, 30.5]-7/16-6-in ext
3. Temp stow Deploy Clevis Bracket with RET on HR 3056</td></tr>
<tr><td></td><td>❑ <u>Install Gap Spanner</u> (EV3)
4. Attach gap spanner to yoke
5. Attach Adj/Gap Spanner/Adj tether to hinge line HR 3047
<u>NOTE</u>: Route under braces and attach to outboard portion of yoke</td></tr>
<tr><td></td><td>❑ <u>Release Yoke ADP and PIP Pin</u> (EV1)

<u>CAUTION</u>
When attempting to remove the Yoke PIP pin and ADP, do not impart more than 10 lbf
Yoke ADP does not have a stowage hole. Do not close ADP lock bracket when ADP is not inserted in a stowage/clevis hole

6. Release yoke PIP pin, secure using pre-installed wire tie → If unsuccessful go to step 8, else skip 8
7. Release yoke ADP, secure using pre-installed wire tie → If unsuccessful go to step 8, else skip 8</td></tr>
<tr><td></td><td>❑ <u>ADP/PIP Pin Contingency Removal</u>
8. Complete step 8 only if step 6 and/or 7 were no joy:
❑ Loosen Stow Clevis Bracket bolts (4)
PGT [B7 25.5 ft-lb, CCW2 30 RPM, 30.5]-7/16-6-in ext, approx 4 turns each
❑ Re-attempt removal of yoke PIP pin and/or yoke ADP, secure using pre-installed wire tie</td></tr>
<tr><td></td><td>❑ <u>Hinge Line Prep</u> (EV3)
9. Remove hinge line ADPs (2), insert in stowage hole (toward station forward), confirm ADP closed
❑ Inboard
❑ Outboard</td></tr>
</table>

EVA 2 S3 OUTBOARD ZENITH PAS DEPLOY (01:00) (Cont)

IV	EV1/2
	❑ Reposition Braces (EV3) 10. Release SARJ Launch Bolt by hand, approx 3 turns ccw necessary If reqd, **PGT** [**B6** 24.0 ft-lb, **CCW2** 30 RPM, 30.5] 11. Release SARJ Brace (cup-cone bolt), stop on turns; 35 turns, do not exceed 37 turns ❑ **PGT [B6** 24.0 ft-lb, **CCW3** 60 RPM, 30.5**]**-7/16-6-in ext (use **A7, CCW2** if desired to go to hardstop) 12. Attach SARJ Brace to Diagonal Strut, hand tighten SARJ Launch Bolt 1 turn cw 13. Release Diagonal Brace (cup-cone bolt), stop on turns; 35 turns, do not exceed 37 turns ❑ **PGT [B6** 24.0 ft-lb, **CCW3** 60 RPM, 30.5**]**-7/16-6-in ext (use **A7, CCW2** if desired to go to hardstop) CAUTION Do not lift diagonal brace more than ~7 deg out of rotation plane to prevent damage to hinge end 14. Guide Diagonal Brace and temp stow with tether to HR 3040 15. Swing yoke inside to provide room for removal of stow clevis bracket
Stow Clevis Bracket Bolts Released | | 5 | 6 | 7 | 8 | | Bolt | | | | | **SYNC POINT**	❑ Swivel Stow Clevis Bracket (EV1) 16. RET to Stow Clevis Bracket 17. Swivel Stow Clevis Bracket: (4 bolts) 10 turns on all bolts except pivot bolt, 8 turns ❑ **PGT [B7** 25.5 ft-lb, **CCW2** 30 RPM, 30.5**]**-7/16-6-in ext 18. Temp stow Stow Clevis Bracket ❑ Deploy PAS to Detent (EV3) 19. Deploy PAS to detent, tend with Adj/Gap Spanner/Adj, lead with yoke – (10 deg past vertical) 20. Reposition Adj/Gap Spanner/Adj at hinge end to take up slack to on HR 3053
SYNC POINT Record Torque and Turns of Stow Clevis Brackets: | Bolt # | 5 | 6 | 7 | 8 | | Initial Torque | | | | | | Turns | | | | |	❑ Reinstall Stow Clevis Bracket (EV1) ** THIS MUST BE DONE BEFORE PAS IS MOVED FROM DETENT TO FINAL DEPLOY** 21. Finger start Stow Clevis Bracket bolts (4), approx 1-2 turns 22. Engage Stow Clevis Bracket bolts (4) to hard stop, expect 10 turns ❑ **PGT [B2** 16.0 ft-lb, **CW2** 30 RPM, 30.5**]**-7/16-6-in ext ← Report torque and turns 23. Retrieve RET from bracket

IV	EV1/2
Record Torque and Turns for the Brace Bolts: Bolt | SARJ Brace | Diagonal Torque | | Turns | |	❑ Reposition Braces (EV3) ** THIS MUST BE DONE BEFORE PAS IS MOVED FROM DETENT TO FINAL DEPLOY** CAUTION Do not lift diagonal brace more than ~7 deg out of rotation plane to prevent damage to hinge end 24. Move Diagonal Brace into position for re-installation 25. Engage Diagonal Brace (cup-cone bolt) to hard stop, approx 35 turns ❑ **PGT [B2** 16.0 ft-lb, **CW2** 30 RPM, 30.5**]**-7/16-6-in ext ← Report torque and turns 26. Release SARJ Brace via SARJ Launch Bolt by hand, approx 1 turn ccw necessary 27. Engage SARJ Brace (Cup-Cone bolt) to hard stop, approx 38 turns ❑ **PGT [B2** 16.0 ft-lb, **CW2** 30 RPM, 30.5**]**-7/16-6-in ext ← Report torque and turns 28. ❑ Re-engage SARJ Launch Bolt bolt for temp stow; hand tighten cw 2-3 turns 29. Retrieve tether from brace temp stow location
Record Torque and Turns of Deploy Clevis Brackets: Bolt # | 1 | 2 | 3 | 4 Initial Torque | | | | Turns | | | | Final Torque | | | |	❑ Re-Install Deploy Clevis Bracket (EV1) ** THIS MUST BE DONE BEFORE PAS IS MOVED FROM DETENT TO FINAL DEPLOY** 30. Finger start Deploy Clevis Bracket bolts (4), approx 1-2 turns 31. Engage Deploy Clevis Bracket bolts (4) to hard stop, expect 10 turns ❑ **PGT [B5** 22.0 ft-lb, **CW2** 30 RPM, 30.5]-7/16-6-in ext ← Report torque and turns 32. Apply final Torque to Deploy Clevis Bracket bolts (4) in Ratchet Mode ← ❑ **PGT [RCW**, 30.5]-7/16-6-in ext, two clicks each bolt 33. Retrieve RET from bracket
	❑ Move PAS from Detent to Final Deploy Position 34. Disconnect Gap Spanner and Move platform from detent into install position, tend with Adj/Gap Spanner/Adj 35. Install yoke into Deploy Clevis Bracket ❑ Release wire tie securing PIP pin and ADP to yoke CAUTION When attempting to install the Yoke PIP pin and ADP, do not impart more than 10 lbf ❑ Install yoke ADP, √lock bracket engaged → If unsuccessful go to step 36, else skip 36 ❑ Install yoke PIP Pin → If unsuccessful go to step 36, else skip 36

EVA 2 S3 OUTBOARD ZENITH PAS DEPLOY (01:00) (Cont)

<table>
<tr><th>IV</th><th>EV1/2</th></tr>
<tr><td rowspan="2">IV: Obtain GO from MCC-H for RTL Checkout

<table><tr><th>RTL #</th><th>1</th><th>2</th><th>3</th></tr><tr><td>PIP Pin</td><td></td><td></td><td></td></tr><tr><td>Test Complete</td><td></td><td></td><td></td></tr></table></td><td>❑ <u>ADP/PIP Pin Contingency Install</u>
36. Complete step 36 only if step 35 was no joy:
❑ Loosen Deploy Clevis Bracket bolts (4), approx 4-6 turns
❑ Some bolts will require Torque Wrench 2-in ext at 31 ft-lb
❑ Remaining bolts, PGT [RCCW, 30.5]-7/16-6-in ext
❑ Re-attempt ADP Installation
❑ Re-attempt PIP pin Installation
❑ Engage Deploy Clevis Bracket bolts (4) to hard stop, approx 4-6 turns
❑ Some bolts will require RAD (attempt w/fingers first)
PGT [A7 9.2 ft-lb, CW2 30 RPM, 30.5]-RAD w/7/16-2-in ext (count turns at bolt head)
❑ Remaining bolts, PGT [B5 22.0 ft-lb, CW2 30 RPM, 30.5]-7/16-6-in ext
❑ Apply final Torque
❑ Some bolts will require Torque Wrench 2-in ext at 31 ft-lb
❑ Remaining bolts, PGT [RCW, 30.5]-7/16-6-in ext</td></tr>
<tr><td>❑ <u>Clean Up/Prep PAS</u>
37. Release Adj/Gap Spanner/Adj
38. Extend Gap Spanner to full length and stow with Adj in trash bag
39. Translate under PAS UMA
40. Tether to hitch pin from EVA OVERRIDE anti-rotation cap, remove hitch pin
41. ❑ Remove anti-rotation cap and stow in trash bag
42. Translate to each Guide Vane (3) and perform:
❑ Remove launch restraint PIP pin from guide vane, stow in trash bag
❑ On MCC-H GO, depress and hold RTL lever for 15 sec, then release
❑ Verify with MCC-H good checkout, move to next guide vane

43. Translate to EBCS Target and perform:

<u>CAUTION</u>
EBCS target has finished surface that is susceptible to damage by contact

❑ Verify both EV crew are clear of target area
❑ Remove target cover, stow on backside of target assembly

44. Check gloves and gauntlets</td></tr>
</table>

EVA 2 S3 OUTBOARD ZENITH PAS DEPLOY (01:00) (Cont)

IV	EV1 – Swanson (FF)	EV3 – Acaba (FF)
	TETHER RECONFIG 1. Place C/L bag #3 on BRT 2. Translate to S1 Safety Tether Anchor 3. Prepare Safety Tether for return to A/L ❑ On EV3 GO: Connect EV1 Waist Tether to EV3 Safety Tether (while EV3 safety tether anchor remains on HR) ❑ On EV3 GO: Release EV3 Safety Tether from S1 HR (3215) ❑ ❑ √Gate closed (both hooks) ❑ ❑ √Hook locked (both hooks) ❑ Release EV1 Safety Tether from S1 HR (3214) 4. Translate to A/L 5. Hand C/L bag #3 to EV3 6. Anchor EV1 Safety Tether to fwd A/L D-ring ❑ √Gate closed ❑ √Hook locked ❑ √Reel unlocked 7. Anchor EV3 Safety Tether to aft A/L D-ring ❑ √Gate closed ❑ √Hook locked 8. Give EV3 GO to release waist tether	TETHER RECONFIG 1. Translate to A/L 2. Complete safety tether re-config to A/L ❑ Connect EV3 waist tether to A/L D-ring ext ❑ √Gate closed ❑ √Hook locked 3. Give EV1 GO to attach Waist Tether to EV3 Safety Tether 4. Give GO to EV1 to release EV3 safety tether anchor 5. Receive C/L bag #3 from EV1 and stow C/L bag #3 in A/L 6. ❑ √Reel unlocked 7. On EV1 GO: Disconnect waist tether from A/L D-ring ext 8. Close A/L thermal cover

EVA 2 S3 OUTBOARD ZENITH PAS DEPLOY – TASK DATA

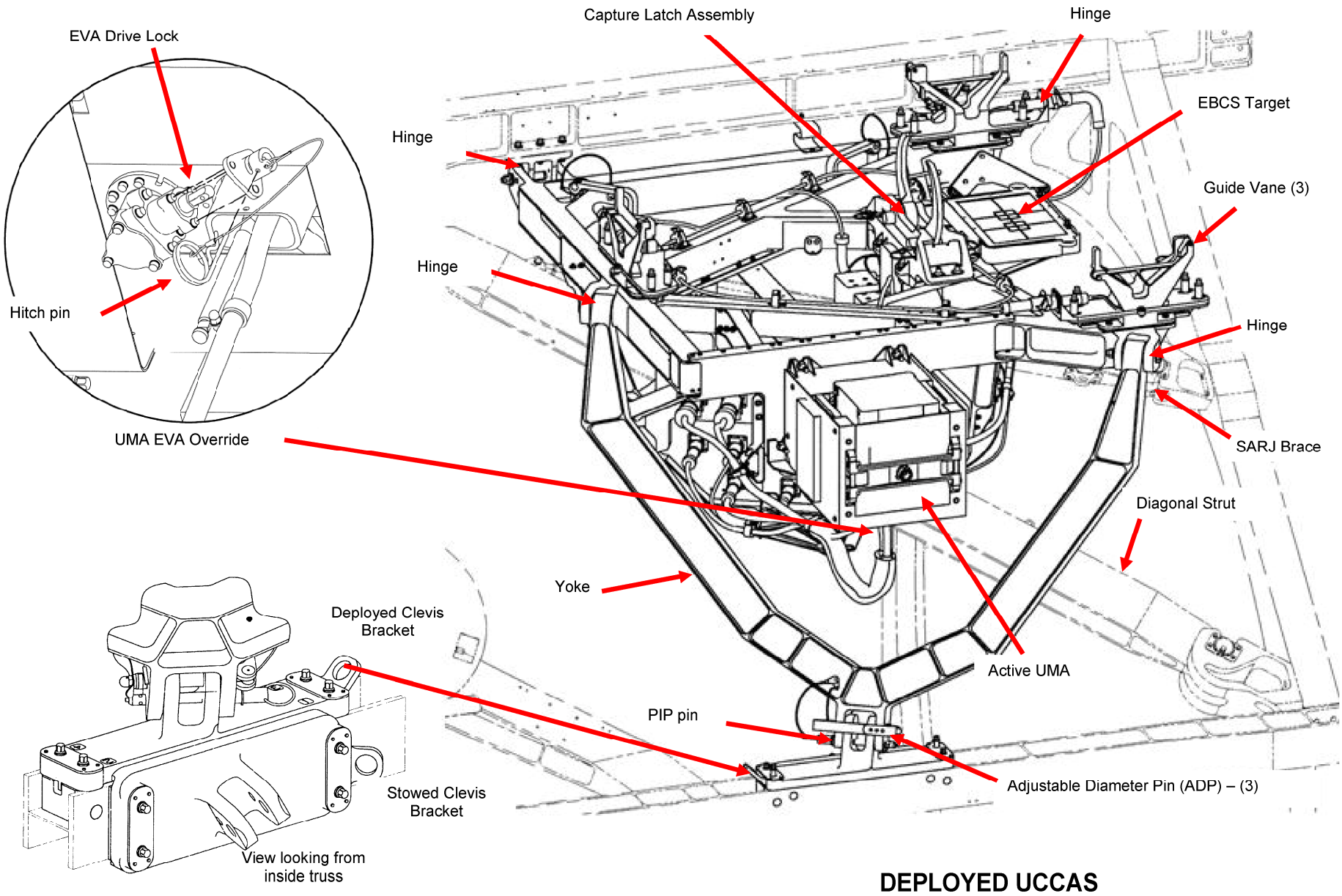

DEPLOYED UCCAS

HINGE LINE ADP ORIENTATION

EVA 2 S3 OUTBOARD ZENITH PAS DEPLOY – TASK DATA (Cont)

Estimated Task Duration:

	Without SSRMS
One EV Crew	N/A
Two EV Crew	01:00

Tools:

EV1	EV3
PGT	PGT
7/16-6-in socket ext	7/16-6-in socket ext
	Adj – 45-72-in Gap Spanner (Large) – Adj

EVA Fasteners:

Fastener Name	Head Size	Qty	Install Torque (ft-lb)	Release Torque (ft-lb)	Failure Torque (ft-lb)	Turns
SARJ Brace Launch Lock Bolt	7/16	1	16.0	21.5	32.3	9-13.5
SARJ Brace cup/cone Bolt	7/16	1	16.0	28.8	14.0 and 31.6	37-40
Diagonal cup/cone bolt	7/16	1	16.0	22.7	14.0 and 31.6	37-40
Stowage Clevis	7/16	4	16.0	25.5	46.7	9-16.5
Deploy Clevis	7/16	4	30.5	25.5	106.6	7-10.5

Inhibits:

Inhibit
S3/S4 SARJ Locked

Foot Restraints (Contingency Yoke Alignment):

Task	WIF	APFR Setting
Zenith/Outboard PAS	S3-11	5, PP, G, 12
Zenith/Inboard PAS	S3-15	3, RR, F, 10
Nadir/Outboard PAS	S3-17	3, PP, F, 12
Nadir/Inboard PAS	S3-25	11, PP, F, 12
Nadir UCCAS	P3-11	3, PP, H, 12

Notes:

1. UMA EVA Override anti-rotation cap must be removed prior to first use of UMA on PAS
2. EBCS target cover must be removed prior to cargo attachment to PAS. Protects target from MMOD and inadvertent contact. Remove as last activity
3. RAD may be needed for re-install of deployed clevis bracket. It will likely exceed RAD limits and need to be returned for refurb

Cautions:

1. Do not lift diagonal brace greater than 7 deg out of rotation plane when rotating to temp stowage location so as to not bend hinge end
2. Do not close ADP lock bracket when ADP is not inserted in a stowage/clevis hole. The pin can fall apart
3. EBCS target has finished surface that is susceptible to damage by contact

Warnings:

EVA 2 TOOL STANCHION RELOCATE/APFR RETRIEVE

IV	EV1 – Swanson (FF)	EV3 – Acaba (FF)
	RELOCATE TOOL STANCHION 1. Translate to Z1 WIF 8 2. Retrieve Tool Stanchion, place on BRT 3. Translate to LAB WIF 4 4. Reconfigure APFR to [1,MM,C,11] 5. Rotate TS collar to nadir 6. Install Tool Stanchion on APFR with tool head fwd, then pitch TS toward Lab 7. Adjust TCV to begin cold soak, as reqd 8. Translate to A/L	RETRIEVE APFR 1. Translate to Z1 WIF 8 2. Retrieve APFR, place on BRT 3. Adjust TCV to begin cold soak, as reqd 4. Translate to A/L 5. Open A/L thermal cover 6. Stow APFR in A/L

EVA 2 CLEANUP/INGRESS

IV	EV1 – Swanson (FF)	EV3 – Acaba (FF)
Prior to Ingress: 1. Perform WVS PWRDN (PHOTO/TV, WVS CUE CARD)	INGRESS 1. Prepare Safety Tether for ingress ❑ On EV3 GO: Connect EV1 Waist Tether to EV3 Safety Tether (while EV3 safety tether anchor remains achored) ❑ On EV3 GO: Release EV3 Safety Tether from aft A/L D-ring ❑ ❑ √Gate Closed (both hooks) ❑ ❑ √Hook Locked (both hooks) ❑ Release EV1 Safety Tether from fwd A/L D-ring 2. Ingress A/L 3. Remove SCU from stowage pouch 4. Remove DCM cover; Velcro to DCM 5. Connect SCU to DCM; √SCU Locked 6. WATER – OFF (fwd), expect H2O IS OFF msg 7. Close thermal cover; attach Velcro strap	INGRESS 1. Complete safety tether re-config for ingress ❑ Connect EV3 waist tether to A/L D-ring ext ❑ √Gate Closed ❑ √Hook Locked 2. Give EV1 GO to attach Waist Tether to EV3 Safety Tether 3. Give GO to EV1 to release EV3 safety tether anchor 4. Ingress A/L 5. Remove SCU from stowage pouch 6. Remove DCM cover; Velcro to DCM 7. Connect SCU to DCM; √SCU Locked 8. WATER – OFF (fwd), expect H2O IS OFF msg
	CAUTION Do not close hatch until EMU Water OFF for 2 min. Verify outer hatch clear of hardware	
	8. √EV hatch clear of FOD and obstructions 9. Verify EV hatch handle position per hatch decal; close and lock Go to PRE-REPRESS (DEPRESS/REPRESS Cue Card)	Go to PRE-REPRESS (DEPRESS/REPRESS Cue Card)

NOTES

NOTES

EVA 3 SUMMARY TIMELINE

PET HR : MIN	IV/SSRMS	EV2 – Arnold	EV3 – Acaba	PET HR : MIN
00:00		**EVA 3 POST DEPRESS, EGRESS & SETUP (00:50)** • Post Depress/Egress (00:25) • Setup (00:20) Egress w/Med ORU Bag [Crewlock Bags (2) inside]	**EVA 3 POST EGRESS & SETUP (00:50)** • Post Depress/Egress (00:25) • Setup (00:20) Egress w/APFR, Crewlock Bag, WIF adapter	00:00
01:00	EV3 – Acaba (SSRMS) for CETA Cart Ops	**CETA CART RELOCATION (01:00)** • CETA Cart (01:00)	**CETA CART RELOCATION (01:00)** • CETA Cart (01:00)	01:00
02:00		**SPDM COVERS (01:30)** • OTCM Cover Reconfiguration (00:30) • EP1 Cover Removal (00:40) • SPDM Cover Cleanup (00:20)	**S1 TASKS (02:10)** • S1/S3 SSAS BBC PNL RECONFIG (00:30) • S3 FLUID QD JUMPER INSTALL (00:35) • S1 FHRC P CLAMP RELEASE (01:05) o Torque Box (00:30) o Hose Box [Stinger] (00:25) o FHRC Cleanup (00:10)	02:00
03:00	EV2 – Arnold (SSRMS) for SPDM & LEE B Lube (EV2 egresses SSRMS prior to LEE REPAIR) **EV2 bingo time to start LEE REPAIR: PET= 03:45**	**LEE B REPAIR (01:45)** • LEE B Snare Repair (01:15)		03:00
04:00	**Begin S0/P1 RPCM powerdown commanding when EV3 completes S1 TASKS** **EV3 must complete or break out of S1 TASKS to start S0 RPCM R&R by a PET = 04:00**	• LEE B Cleanup (00:30)	**S0 1A_D RPCM R&R (00:45)**	04:00
05:00		**CLEANUP AND INGRESS (00:50)**	**P1 1A_A RPCM R&R (00:45)** **CLEANUP AND INGRESS (00:25)**	05:00
06:00	**EVA 3 PET = 06:00 hr**	**PRE-REPRESS (00:05)**	**PRE-REPRESS (00:05)**	06:00
-06:30				-06:30

EVA 3 SUMMARY TIMELINE (Cont)

EVA 3 Constraints and Bingo Times Summary

1. Powerdown required to put inhibits in place for S0-1A_D and P1-1A_A RPCM R&Rs will take approximately 15-20 min of ground commanding to execute; thus, **MCC-H** will begin powerdown operations when EV3/Acaba completes the S1 tasks and starts translation to the RPCM R&R location.
2. The maximum amount of time that the powerdown can be in place is 3:00 hr due to thermal constraints on S-Band ORUs. Thus, the DDCU that provides inhibits for the RPCMs must be powered up within 3:00 hr of powerdown.
3. Some of the ISS cameras that will be powered down in support of the RPCM R&Rs are required to verify that the SSRMS is in a good configuration for the LEE B Lube task and that EV2/Arnold is in good position to begin the EVA task. The cameras will not be de-routed for powerdown until the SSRMS operator verifies the arm is in a good configuration and EV2/Arnold has egressed the APFR.
4. **MCC-H** will proactively make a call to ISS and Discovery that the cameras are about to be de-routed and powered down before it is executed.
5. Per their procedure, crewmembers will confirm w/**MCC-H** that inhibits are in place prior to beginning the RPCM R&R.
6. Per their procedure, crewmembers will notify **MCC-H** that the RPCM R&Rs are complete.
7. **MCC-H** will make a call to the crewmembers confirming that DDCU powerup is beginning, once the RPCM R&Rs are complete.
8. To manage the timeline and ensure LEE B Lube and RPCM R&R tasks are completed, EV2/Arnold needs to stop the SPDM Covers and start the LEE B Lube at an EVA PET of NLT 3:45 hr, and EV3/Acaba needs to stop the S1 Tasks and start the first RPCM R&R at an EVA PET of NLT 4:00 hr.
9. The bingo time to begin the second RPCM R&R is EVA PET of NLT 5:00 hr, to support a nominal EVA PET of 6:30 hr total.
10. If only one RPCM R&R is performed, the priority is the S01A_D RPCM, per the Flight Priorities. Per their procedure, crewmembers will R&R the S0 RPCM first.

EVA 3 INHIBIT PAD

Orbiter (1)

ALL EVAs

TCS
L12 1. √TCS POWER – OFF

KU-BAND ANTENNA
{Performed during egress}
MCC-H 1. √KU-BAND Mask – active
2. √KU-BAND EVA Protect Box – active

Ground

ALL EVAs

Ground Radar
MCC-H 1. √TOPO console, ground radar restrictions in place for EVA

USOS (1)

ALL EVAs

PCU

NOTE
PCUs may require up to a 1-hr warmup period before they are operational

MCC-H 1. √PCUs (two) operational in discharge mode and one of the following:
a. CCS PCU EVA hazard control FDIR enabled
b. No more than two arrays unshunted and oriented < 105º from velocity vector

If one or both PCUs failed
2. No more than two arrays unshunted and oriented < 105º from velocity vector

EuTEF
COL-CC Verify PLEGPay Power Status (ETF_PLEGPAY_Pwr_Stat) – OFF

LOCATION DEPENDENT INHIBITS

Lab Window
{On call, EV crew not expected to be in this area}
IV If EV crew less than 10 ft from window or in window FOV, close window shutter

KU-Band (SGANT) Antenna
{On call, EV crew not expected to be in this area}
MCC-H If EV crew < 3.3 ft from KU-BAND antenna
1. Park KU-BAND:
1.1 Pointing Mode – Inhibit
1.2 PLC – Reset
1.3 Autotrack Continuous Retry – Inhibit

Mobile Transporter
MCC-H 1. √MT latched

EVA 3 INHIBIT PAD (Cont)

USOS (2)

EVA 3 SPECIFIC INHIBITS

RPCM R&R
{Prior to performing RPCM P1 1A_A and S0 1A_D R&R}

NOTE
Phalcon plan is to take DDCU S01A Converter – Off, prior to the first RPCM R&R task, and leave in off until both RPCM R&Rs are complete

RPCM S01A_D
MCC-H 1. Verify DDCU S01A Converter – Off

RPCM P11A_A
MCC-H 1a. Verify RPCM S01A_A RPC 01 Open, Close Inhibited
Or
MCC-H 1b. Verify DDCU S01A Converter – Off

S1-S3 SSAS Panel BBC Inhibits (16)

1. RPCM S13A G: RPC 01 – Open, Close Cmd Inhibit
   RPC 02 – Open, Close Cmd Inhibit
   RPC 13 – Open, Close Cmd Inhibit
   RPC 14 – Open, Close Cmd Inhibit
   RPC 15 – Open, Close Cmd Inhibit
2. RPCM S12B A: RPC 05 – Open, Close Cmd Inhibit
   RPC 11 – Open, Close Cmd Inhibit
   RPC 13 – Open, Close Cmd Inhibit
3. RPCM S14B G: RPC 01 – Open, Close Cmd Inhibit
   RPC 05 – Open, Close Cmd Inhibit
   RPC 13 – Open, Close Cmd Inhibit
   RPC 14 – Open, Close Cmd Inhibit
   RPC 15 – Open, Close Cmd Inhibit
4. RPCM S11A A: RPC 03 – Open, Close Cmd Inhibit
   RPC 04 – Open, Close Cmd Inhibit
   RPC 13 – Open, Close Cmd Inhibit

RSOS (1)

ALL EVAs

SM Antennas
IV
1. GTS – Deactivate
2. ARISS (Ham Radio) – Deactivate or VHF (144-146 MHz) TX only

USOS (3)

LOCATION DEPENDENT INHIBITS

S-Band (SASA) Antennas
{On call, EV crew not expected to be in this area}
MCC-H If EV crew < 3.6 ft from S1 SASA [P1 SASA]
1. P1 SASA (S1 SASA) – Active
2. S1 SASA [P1 SASA] – Powered down

SARJ
{On call, EV crew not expected to be in this area}
MCC-H If EV crew working within 2 ft or outboard of SARJ
1. √DLA (1) – LOCKED
2. All motor setpoints set to zero
3. All motors deselected

TRRJ For S1/S3 Fluid QD Jumper & FHRC P-Clamps:
MCC-H While EV crew working within 2 ft of S1 TRRJ rotation envelope
1. √DLA (1) – LOCKED (locked at 0 deg for FHRC P-Clamps)

FPMU
{On call, EV crew not expected to be in this area}
MCC-H If EV crew working within 5 ft of Floating Potential Measurement Unit
1. FPMU power – Off

SSPTS
{On call, EV crew not expected to be in this area}
MCC-H If EV crew working within 2 ft of SSPTS cables
1. RPCM LA1A4A D RPC 3 – Open, Close Cmd Inhibit
2. RPCM LA2A3B D RPC 1 – Open, Close Cmd Inhibit
3. RPCM Z14B A RPC 2 – Open, Close Cmd Inhibit
4. RPCM Z13B A RPC 2 – Open, Close Cmd Inhibit

EVA 3 NOTES, CAUTIONS, AND WARNINGS

NOTES

1. Bolt install: Report torque and turns
   Bolt release: Report torque and turns
   (if different from published range)

2. EVA connectors: After dis-connection and prior to connection; verify pin and EMI band integrity. Verify connector free of FOD

3. Inspect Fluid QDs for damage, prior to mating

4. Toolbox doors must be closed with one latch per door, when EV crew not in immediate vicinity

5. Avoid contact with OBSS striker bars (Vitrolube coating)

CAUTION

ISS Constraints

A. Avoid inadvertent contact with
   1. Grapple fixture shafts (drylube)
   2. PIP pins
   3. EVA Crane [PMA1]
   4. TCS Reflectors [PMA2,PMA3]
   5. APAS hardware [PMA2,PMA3]
   6. CETA Lights (Z-93 paint) [LAB,S1,Node 1]
   7. Deployed MISSEs [Columbus EPF]
   8. Passive UMAs
   9. MBS/SSRMS/SPDM/JEMRMS taped radiative surfaces: VDU, ACU, JEU, LEU, MCU, CRPCMs, and Cameras
   10. Deployed TUS cable [Nadir CETA rail]
   11. S0 aft face Radiator
   12. GPS Antennas (S13 paint) [S0,JLP]
   13. UHF Antennas [LAB,P1]
   14. ETCS Radiator flexhoses and panels [S1,P1]
   15. EETCS/PV Radiator flexhoses, bellows and panels [P6,P4,S4,S6]
   16. SASA RF Group [S1,P1]
   17. Heat pipe radiators [Z1]
   18. PCU cathode and HCA ports [Z1]
   19. Ku-Band Antenna (SGANT) dish [Z1]
   20. CMG cover/shells [Z1]
   21. SPDM SJEU, EP, OTCM, LEU, and LEE VDU Radiator surfaces
   22. Open CBM petal covers, LAB window shutter, and JPM window shutter
   23. FPMU [S1]
   24. OTSD
   25. COL HAM radio antennas [COL-Nadir]
   26. JTVE Cameras [JEM]
   27. JEM A/L Target and Pins
   28. S0/Node 2 Fluid Tray Hardlines at Node 2 end are limited to 25 lb

CAUTION (Cont)

ISS Constraints (Cont)

B. Electrical cables
   1. Avoid bend radii < 10 times cable diameter

C. Fiber optic cables
   1. Avoid bend radii < 10 times cable diameter
   2. Avoid pulling on cable during mate/demate

D. Fluid line flex hoses and QDs
   1. Avoid bend radii < 5 in for hoses with diameter < 1 in on LAB, S0, S1, P1, and 10-in for hoses with diameter < 1 in on all other elements
   2. Avoid bend radii < 14 in for hoses with a diameter ≥ 1 in
   3. Additional care should be taken to not exceed bend radii when applying loads at the flexible hose to rigid tube stub interfaces
   4. Ensure fluid QD booties are fully closed prior to leaving worksite; wire tie if reqd

E. For structural reasons
   1. Avoid vigorous body motions, quick grabs and kickoffs against tether restraints
   2. Avoid performing shaking motions (sinusoidal functions) more than four cycles
   3. Avoid kicking S1/P1 radiator beam
      If any of these occur, wait 2 to 5 min to allow structural response to dissipate

EVA 3 NOTES, CAUTIONS, AND WARNINGS (Cont)

CAUTION (Cont)

ISS Constraints (Cont)

F. Other
1. ITT Cannon connector: On demated connectors, do not rotate collar or manipulate cable/connector using collar or connector tool
2. WIS Antennas: Do not use as handholds [Node 1,P6,Z1]
3. Lubricant from Ku-Band SGANT gimbals [Z1], CMGs [Z1], and RTAS Ground Strap fasteners [P6,P4,S4] can contaminate EMU
4. MLI handholds are not rated for crewmember translation loads
5. CBM petal covers may not be used as handholds unless both launch restraint pins are engaged
6. Prevent inadvertent contact of the tether shuttle with ETRS when the P3/S3 Tether Shuttle Stop is raised away from the rail

CAUTION (Cont)

Shuttle Constraints

A. Avoid inadvertent contact with
1. OBSS and SRMS Composite Sections and Cable Harnesses, Joint Torque Arms, Grapple Fixture Shafts,
2. LCS (silver Teflon) and LDRI (silver Teflon) and ITVC (gold foil) [OBSS]
3. WVS Antenna [ODS Truss & PLB Sill]
4. Payload Bay and Camera wire harnesses, cables, cable guides and connectors

B. No touch
1. LDRI diffuser [OBSS]
2. OBSS saddle contacts (when OBSS unberthed) [OBSS]
3. Monkey fur [PLB]
4. Cameras: Metallic surfaces [PLB]
5. Ku-Band Antenna black dish and gold thermal blankets [PLB]

EVA 3 NOTES, CAUTIONS, AND WARNINGS (Cont)

WARNING

ISS Constraints

A. Avoid inadvertent contact with
1. Grapple fixture targets and target pins
2. SSU, ECU, beta gimbal platform, mast canister, SAW blanket boxes unless the beta gimbal is locked and the motor is turned off
3. Stay inboard of SARJ when active
4. Stay 2 ft from S1/P1 radiator beam rotational envelope when beam is free to rotate
5. Stay 5 ft from moving MT on face 1
6. SOLAR and EuTEF [COL EPF]

B. Handrails
1. Handrails previously used for MISSE attachment may not be used as a safety tether point [A/L endcone 564 & 566, A/L Tank 2 nad/fwd & port/fwd, P6 5389]

C. Pinch
1. NZGL connector linkage. Use caution when mating/locking
2. ITT Cannon Connector rotating housing
3. EV side of IV Hatch during Hatch operation (also snag hazard) [A/L]
4. LAB window shutter and CBM petal cover and JPM window shutter linkages during operation
5. JEMRMS HRM capture latches
6. JEM Cameras (JTVEs, EVE, WVE)
7. JEM EFBM capture latches

D. QDs
1. If QD is in FID when valve is opened (bail fwd), QD will leak and fluid line may whip
2. Do not rotate if in mated/valve open config

WARNING (Cont)

ISS Constraints (Cont)

E. RF radiation exposure
1. Stay 3.6 ft from S-Band (SASA) high gain Antenna when powered [S1,P1]
2. Stay 1.3 ft from S-Band (SASA) low gain Antenna when powered [S1,P1]
3. Stay 1 ft from UHF Antenna when powered [LAB,P1]
4. Stay 0.3 ft from fwd/aft JPM PROX antenna

F. Sharp Edges
1. Inner edges of WIF sockets
2. APFR active WIF probes
3. Mating surfaces of EVA connectors Avoid side loads during connector mating
4. Back side of MMOD shield fasteners
5. Spring loaded captive EVA fasteners (e.g., 6B-boxes, BMRRM, RTAS, SARJ Covers); the end of the spring may protrude
6. PMA umbilical launch restraints-exposed bolt threads
7. Adjustable Fuse Tether (Fish Stringer) buckles stowed in Node Bag
8. Nickel coated braided copper Ground Straps may contain frayed wires [P6,P4,S4,S6]
9. SPDM OTCM gripper jaws

WARNING (Cont)

ISS Constraints (Cont)

F. Sharp Edges (Cont)
10. Solar Array Blanket Box [P6,S6]
11. Keep hands away from SSRMS LEE/POA/SPDM LEE/JEMRMS EE opening, snares, and PDGF curvic coupling (teeth)
12. Fastener threads on back of Z1 U-jumper male FQD panel, if nutplate cap missing
13. Outboard MT rail attachment lug near P6 handrail 5333 and gap spanner
14. P2 connector on EWIS box TAA-06 [Zenith/Forward Corner 1 of P5 – SARJ at 0 deg]
15. Port/Aft portion of A/L circular HR [HR 0506]
16. Interior of JEMRMS HRMs
17. JEM A/L hatch corners

G. Thermal
1. EVA connectors with booties may become hot if left uncovered. Handling may need to be limited
2. PMA handrails may be hot. Handling may need to be limited
3. Turn off glove heaters when comfortable temp reached to prevent bladder damage. Do not pull fingers out of gloves when heaters are on
4. Uncovered trunnion pins may be hot
5. SSRMS/MBS/SPDM/JEMRMS/JTVE operating cameras and lights may radiate large amounts of heat

WARNING (Cont)

ISS Constraints (Cont)

G. Thermal (Cont)

6. Stay ≥ 1 ft away from PMAs and MMOD shields > 270 degF if EMU sun visor up; limit time to 15 min or less if > 300 degF
7. Stay at least 0.5 ft away from PMA and MMOD shields > 325 degF
8. Do not touch EMU protective visor if temp has been < -134 degF for > 15 min
9. No EMU TMG contact with PMAs and MMOD shields > 320 degF
10. No EMU boot contact with foot restraint when temp < -120 degF or > 200 degF
11. Columbus end cones may violate touch temperature constraints when $-75 \leq \beta \leq -60$ or $60 \leq \beta \leq 75$
12. PDGF surfaces may not meet touch temperature requirements for unlimited contact when $\beta \leq -70$ or $\beta \geq 70$
13. JPM port end cones and JLP port nadir may violate touch temperature constraints when $\beta > 60$ deg

WARNING (Cont)

ISS Constraints (Cont)

H. Electrical Shock

1. Stay ≥ 2 ft from ungrounded floating connectors if not unpowered
   - SSPTS connectors include NOD1 Stbd/Fwd HR 0130, Lab Stbd/Fwd HR 0273, PMA2 Stbd and Port
   - MBS Cross-Connect jumpers (translate past these using UMA handrails) Include S0 EVA Power Cables (inside S0 Bay 00 Face 4, Bay 01 Face 3) ESP2 jumper (inside S0 Bay 03 Face 4)
2. Do not touch SPDM CLPA 1 electrical connector prior to camera installation

WARNING (Cont)

Shuttle Constraints

A. Arcing/Molten Debris

1. Stay ≥ 2 ft from exposed EFGF connector when OBSS berthed, powered, and EFGF not grappled [PLB]
2. Stay ≥ 2 ft from exposed Stbd Fwd MPM contacts [PLB]
3. Stay above PLB sill when within 1 ft of powered ROEU connector [PLB]

B. Pinch

1. PRLA operation [PLB]

C. RF radiation exposure

1. Stay 3.28 ft from S-Band Antenna when powered
2. Stay 1 ft from top and side of UHF PLB Antenna radome surface when in high powered mode [ODS truss]
3. Stay 0.33 ft from top and side of UHF PLB Antenna radome surface when in low powered mode [ODS truss]
4. Remain below the level of the PLB door mold line for first 20 in Aft of Fwd bulkhead when S-Band Antenna powered [PLB]
5. Remain on the inboard side of the Stbd slidewire (sill handrails if slidewire not installed) for first 20 ft Aft of Fwd bulkhead when Ku-Band Antenna powered [PLB]

EVA 3 NOTES, CAUTIONS, AND WARNINGS (Cont)

WARNING (Cont)

Shuttle Constraints (Cont)

D. Sharp Edges
1. PRLA grounding wipers [PLB]
2. LDRI baffles (also an entrapment hazard) [OBSS]
3. Keep hands away from SRMS EE opening and snares
4. TCS connector backshells have exposed threads [ODS]

E. Thermal
1. Illuminated PLB lights; do not touch
2. OBSS grapple fixture shafts/cams may be hot. Limit handling if required
3. Stay 27 ft from PRCS when powered
4. Stay 3 ft from VRCS when powered
5. Stay 3 ft from APU when operating

F. Contamination
1. Stay out of the immediate vicinity of leaking jet or APU

G. Lasers
1. Do not look at LDRI diffuser or LCS laser aperture window

EVA 3 TOOL CONFIG

EV2

EMU D-rings

- ❑❑ 2 – Tether Extender
- ❑❑ Waist Tether [on right]
- ❑❑ 85-ft Safety Tether [on right]
- ■❑ 55-ft Safety Tether (spare) [on right] [to MWS]

❑❑ MWS

- ❑❑ Small trash bag
- ❑❑ RET (w/PIP pin) [right]
- ❑❑ RET (sm-sm)
- ❑❑ Adj tether [right]
- ❑❑ 2 – Wire ties

❑❑ Swing Arm [right side]

- ■❑ PGT w/6-in wobble s/n _____
  - ■❑ RET (sm-sm)
- ❑❑ Wire tie loop (holster) for Lube Gun

❑❑ BRT [left side]

- ❑❑ 2 – Wire ties, short
- ❑❑ RET (sm-sm)

❑❑ SAFER

Use Blue RETS only

RET Counts:	used	total (ISS qty)
RETs (sm-sm)	= 9	(16)
RETs (PIP pin)	= 4	(5)
RETs (lg-sm)	= 4	(8)
Adj Eq Tethers (sm-sm)	= 6	(10)
Adj Eq Tethers (lg-sm)	= 2	(2)
D-ring Tether Extenders	= 5	(6)

NOTE: Prior to use, inspect the following hardware:

- ❑ RET cords for fraying
- ❑ Safety Tether & Waist Tether load alleviating straps: No red visible
- ❑ Sm Trash Bag: Bristle deformation/damage, after stowing tools in trash bag

EV3

EMU D-rings

- ❑❑ 2 – Tether Extender
- ❑❑ Waist Tether [on right]
- ❑❑ 85-ft Safety Tether [on right]
- ❑■ 55-ft Safety Tether (spare) [on right] [to MWS]

❑❑ MWS

- ❑❑ Small Trash Bag
- ❑❑ RET (w/PIP pin) [right]
- ❑❑ RET (sm-sm)
  - ❑■ WIF Adapter
- ❑❑ 2 – Wire ties

❑❑ Swing Arm [right side]

- ❑❑ PGT w/no socket s/n _____
  - ■❑ 6-in wobble socket
  - ❑❑ RET (sm-sm)

❑❑ BRT [left side]

- ❑❑ 2 – Wire ties, short
- ❑❑ RET (sm-sm)

❑❑ SAFER

CREWLOCK

❑❑ RET (Lg-sm)

- ❑❑ LEE B Lube C-Lk Bag (#1)
  - ❑❑ *Grease Gun w/Straight Nozzle (Int RET #1, outside of bag)
    - ❑❑ EVA Wipe w/Wire Tie (thru wipe TP)
    - ❑❑ Adj tether (around Grease Gun)
  - ❑❑ Adj tether (Int RET #2)
    - ❑❑ 2 – EVA Wipe
  - ❑❑ RCC Gap Gauge (Int RET #3)
  - ❑❑ Needle Nose pliers (Int RET #4)

*Prime grease gun by disengaging plunger and gently pushing fwd on back of triangle until resistance met

CREWLOCK (Cont)

❑❑ RET (Lg-sm)

- ❑❑ Med ORU Bag
  - ❑❑ 2 – Adj Equip Tether to outside of bag
  - ❑❑ RET (sm-sm) (for EP MLI Cover)
    - ■❑ EP MLI Cover
  - ❑❑ RET (sm-sm)
    - ■❑ WIF Adapter
  - ❑❑ 2 – EVA Wipes to bag straps (lid)
  - ❑❑ EVA Camera
    - ❑❑ RET (sm-sm)
  - ❑■ RET (sm-sm)
    - ❑■ PGT w/6-in wobble s/n _____
  - ❑❑ Adj tether (Lg-sm)
    - ❑❑ RPCM P1 1A_A Crewlock Bag (#2)
      - ❑❑ RPCM for P1 1A_A s/n C326597 (Int RET #1)
      - ❑❑ Rnd scoop (Int RET #2)
  - ❑❑ Adj tether (Lg-sm)
    - ❑❑ RPCM S0 1A_D Crewlock Bag (#4)
      - ❑❑ RPCM for S0 1A_D s/n C235299 (Int RET #1)
      - ❑❑ Rnd scoop (Int RET #2)
      - ❑❑ Cnctr Insul. Sleeve, size 33/37 (Int RET #3)
  - ❑❑ Adj tether (sm-sm) (to Med ORU Bag Lid)
    - ❑❑ S1 Tasks Crewlock Bag (#3)
      - ❑❑ RET w/PIP pin
        - ❑■ 6-in ext – 7/16-in wobble socket
      - ❑❑ RET w/PIP pin
        - ❑❑ 18-in ext – 7/16-in
      - ❑❑ Ratchet w/2-in rigid ext (Int RET #1)
      - ❑❑ EVA Camera
        - ❑❑ RET (sm-sm)

❑❑ Tether ext on A/L D-ring

Bag Color Key: 119 EVA Tools, Staging, Crewlock Bag, MWS

EVA 3 TOOL CONFIG (Cont)

CREWLOCK (Cont)

Staging Bag
- ❑❑ Fish Stringer #1
  - ❑❑ Wire Tie Caddy (hook #1)
    - ❑❑ 9 – wire ties
  - ❑❑ Velcro/Tape Caddy (hook #2)
  - ❑❑ PGT s/n _____ (hook #3)
    - ❑❑ PGT Battery s/n _____
    - ❑❑ 7/16-in (wobble) Socket-6 ext
  - ❑❑ Vise Grips (hook #4)
  - ❑❑ Ratchet Wrench (hook #5)
    - ❑❑ 7/16-in (rigid) Socket-9 ext
  - ❑❑ Cheater Bar (hook #6)
  - ❑❑ Hammer (hook #7)
  - ❑❑ Spare 55-ft Safety Tether (to strap)
- ❑❑ Fish Stringer #2
  - ❑❑ Connector Cleaner Tool Kit (hook #1)
  - ❑❑ Pin Straightener Assy (hook #2)
  - ❑❑ Probe (hook #3)
  - ❑❑ Pry Bar (hook #4)
  - ❑❑ Sm Trash Bag (hook #5)
    - ❑❑ 72-in Gap Spanner
  - ❑❑ Torque Wrench (preset to 31 ft-lb) (hook #6)
  - ❑❑ RAD (hook #7)
  - ❑❑ Long-Duration Tie-Down Tether #1 (to strap)
  - ❑❑ Long-Duration Tie-Down Tether #2 (to strap)
  - ❑❑ MWS Key Strap Assy (on wire tie, to strap)

- ❑❑ RET (lg-sm)
  - ❑❑ Sm ORU Bag
    - ❑❑ Fish Stringer #3
      - ❑❑ Cnctr Insulating Sleeve, size 21/25 (hook #1)
      - ❑❑ Cnctr Insulating Sleeve, size 21/25 (hook #2)
      - ❑❑ Cnctr Insulating Sleeve, size 21/25 (hook #3)
      - ❑❑ Cnctr Insulating Sleeve, size 21/25 (hook #4)
      - ❑❑ Cnctr Insulating Sleeve, size 33/37 (hook #5)
      - ❑❑ Cnctr Insulating Sleeve, size 33/37 (hook #6)

EQUIPMENT LOCK

Mesh Bag #1 (119 EVA Tools Bag)
- ❑ Fish Stringer
- ❑ ORU Tether
- ❑ Grease Gun
- ❑ BRS Pin Tool w/sheath
- ❑ Ziploc bag w/grease gun caps

Mesh Bag #2 (EVA Done Bag)
- ❑ Socket ext 5/8-in, 7.8-in #2
- ❑ Rnd TM w/5/8-in prd socket
- ❑ Socket Caddy
- ❑ Torque Wrench Bag
- ❑ Cannon Connector Tool #1
- ❑ Cannon Connector Tool #2
- ❑ Ratchet Wrench
  - ❑ Socket ext 7/16-in, 2-in #1
- ❑ Cnctr Insulating Sleeve 33/37

IV Bag
- ❑❑ 2 – Towels
- ❑❑ Contamination Detection Kit
- ❑❑ 2 – GP Caddy
  - ❑❑ 2 – Adjustable Thermal Mittens
- ❑❑ Skt Caddy (hatch cont) w/RET (sm-sm) (black)
  - ❑❑ 1/2-in Socket-8 ext
  - ❑❑ 7/16-in (wobble) Socket-6 ext (spare)
- ❑❑ 2 – DCM Plug (SAFER Hardmount)
- ❑❑ 2 – RET (sm-sm, black)

Mesh Bag #3 (Transfer to Shuttle)
- ❑ Locking Strut Aid #1
- ❑ Locking Strut Aid #2
- ❑ Locking Strut Aid #3
- ❑ Locking Strut Aid #4
- ❑ Torque Wrench (s/n 1007)

❑ Review PGT ops
- Report "green light" (for torque down ops)
- Report torque and turns
- Expect LOTORQ fault msg, Fault LED and Red LED for bolt release ops

❑ Empty Trash Bag into Ziplock bag
- Place Ziplock bag into EVA Done Bag

❑ Check Trash Bag zipper is closed

Bag Color Key: 119 EVA Tools, Staging, Crewlock Bag, MWS

EVA 3 EGRESS (00:25)

IV	EV2 – Arnold (FF)	EV3 – Acaba (SSRMS)
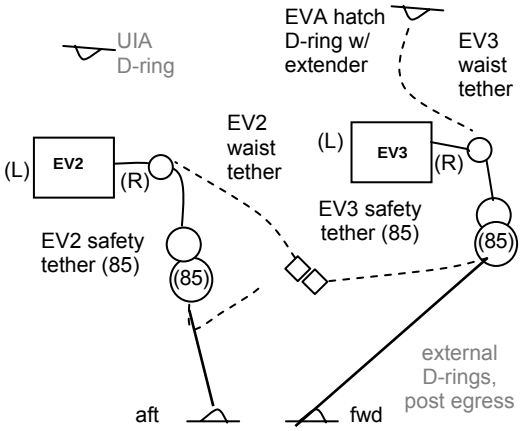 EV2: 1 – 85-ft Safety Tether (to Airlock) EV3: 1 – 85-ft Safety Tether (to Airlock) 1 – 55-ft Safety Tether (spare for SSRMS) NOTE Sunrise/Sunset checks: • √Helmet lts, visor, as reqd • √Glove heaters • √Tool, MWS tethers • √MWS, BRT latches	INITIAL CONFIG Verify Safety Tether configuration: ☐ EV2 right Waist Tether connected to EV3 Safety Tether ☐☐ √Gate closed (both hooks) ☐☐ √Hook locked (both hooks) EGRESS (00:25) 1. Open hatch thermal cover 2. Egress crewlock 3. Attach EV2 85-ft Safety Tether hook to aft D-ring anchor point. Verify Safety Tether configuration: ☐ √Gate closed ☐ √Hook locked ☐ √Safety Tether Reel unlocked 4. Attach EV3 85-ft Safety Tether to forward D-ring anchor point ☐ √Gate closed ☐ √Hook locked ☐ Release EV2 waist tether 5. Give EV3 GO to release waist tether 6. EV2 receive APFR from EV3 Stow APFR in airlock toolbox starboard WIF (Low-profile, record APFR settings: [__,__,__,__]) ☐ √Blk-Blk, pull/twist test 7. EV2 receive med ORU Bag Attach med ORU to BRT 8. EV2 receive LEE Lube Crewlock Bag #1 Hold LEE Lube Crewlock Bag #1 for EV3	INITIAL CONFIG Verify Safety Tether configuration: ☐ EV3 right Waist Tether connected to airlock hatch D-ring extender ☐ √Gate closed ☐ √Hook locked EGRESS (00:25) 1. ☐ √EV3 Safety Tether Reel unlocked 2. On EV2 GO, release waist tether 3. EV3 retrieve APFR and transfer to EV2 4. EV3 retrieve Med ORU Bag Transfer Med ORU Bag to EV2 5. EV3 retrieve LEE Lube Crewlock Bag #1 Transfer LEE Lube Crewlock Bag #1 to EV2 [Keep RET (lg-sm) on bag]

IV	EV2 – Arnold (FF)	EV3 – Acaba (SSRMS)
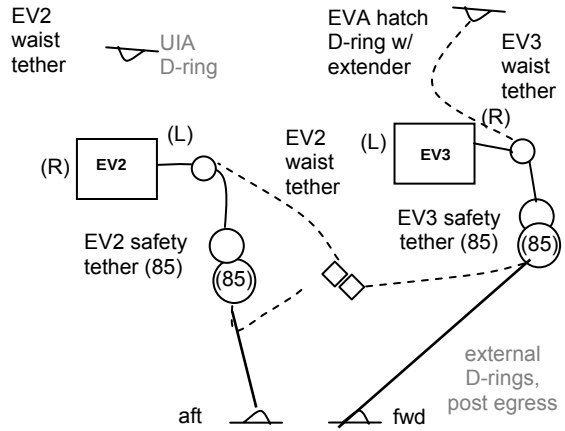 EV2: 1 – 85-ft Safety Tether (to Airlock) EV3: 1 – 85-ft Safety Tether (to Airlock) 1 – 55-ft Safety Tether (spare for SSRMS) 1. Post crew egress: WVS Software: Select page – RF Camera sel 'Advanced controls' S-Band level (two) – max	<u>EGRESS</u> (Cont) (00:25) 9. Verify EV3 SAFER Configuration: ☐ √R Handle down (HCM door – Closed) ☐ √L Handle down (MAN ISO Valve – Open) 10. Close hatch thermal cover 11. Translate to S0 HR 3528	<u>EGRESS</u> (Cont) (00:25) 6. Attach LEE Lube Crewlock Bag #1 to BRT 7. Egress Airlock 8. Verify EV2 SAFER Configuration: ☐ √R Handle down (HCM door – Closed) ☐ √L Handle down (MAN ISO Valve – Open) 9. Translate to CETA Cart 2 location (outboard) (fairlead, as reqd)

<u>WARNING</u>
Maintain a 2-ft Keep-Out-Zone for floating cables between MT and MBS. Stay on UMA handrails during translation underneath MT

EVA 3 SETUP (00:20)

IV	EV2 – Arnold (FF)	EV3 – Acaba (SSRMS)
 CETA Carts starting position – **Port** side of MT 1. IV: Verify SSRMS at EVA 3 Setup position, then, give EV2 GO for APFR Install Use GCA, as reqd	SETUP (00:20) 1. Temp stow med ORU Bag on S0 HR 3528 Time permitting: 2. Deploy Med ORU Bag – adj tethers (2) to HR 3528 3. Deploy S1 Tasks Crewlock Bag #3. Temp stow Crewlock Bag 4. Translate to CETA Cart's location (MT at WS 4) 5. Assist EV3 with GCA/clearances, as reqd 6. Stow EV3 airlock Safety Tether stbd of CETA Cart pickup location at HR S0 3530 stand-off (nadir)	SETUP (00:20) 1. Prep CETA Cart 2 for transfer ❑ CETA Cart 2 coupler to UNLOCK ❑ Translate CETA 2 to Bay 04. Align inboard TFR w/truss marker 8070 ❑ Engage parking brake (left handle) ❑ CETA Cart 2 coupler to CAPTURE ❑ Stow brake handles (4) (forward) ❑ √Swing arms (3) stowed 2. Temp stow LEE Lube Crewlock Bag #1 on S0 HR 3546 3. On IV GO: When SSRMS at the EVA 3 Setup position: Give M1/M2 GO ("ready") for APFR install and ingress. Use GCA, as reqd 4. Install WIF adapter on SSRMS (TP toward EE) ❑ √PIP pin installed ❑ Perform pull test 5. Retrieve APFR from CETA Cart 2 WIF 4 6. Install **APFR** [**12**,**PP**,**F**,**6**] in WIF adapter ❑ √Blk-Blk, pull/twist test 7. Attach 55-ft safety tether to SSRMS EE HR, and perform tether swap. Verify tether configuration: ❑ √Gate closed ❑ √Hook locked ❑ √Safety Tether Reel unlocked ❑ Release EV3 85-ft Safety Tether and transfer to EV2
	CAUTION Do not impart loads into CETA Cart with less than 3 of 4 wheel bogies latches closed	

EVA 3 CETA CART RELOCATION (01:00)

IV/RMS	EV2 – Arnold (FF)	EV3 – Acaba (SSRMS)
MT | CETA Cart **1 (inboard)** | CETA Cart **2 (outbd)** CETA Carts starting position – **Port** side of MT CETA Cart **2 (outbd)** | MT | CETA Cart **1 (outbd)** CETA Cart 2 relocated – **Stbd** side of MT 1. M1/M2: Receive report from EV3 when APFR ingress is complete 2. IV: ❑ Verify good EV3 glove heaters, visor, and TCV configuration 3. M1/M2: On EV3 GO, CETA Cart 2 ready for removal 4. M1/M2: On EV3 GO, maneuver CETA Cart 2 to Port Clearance position 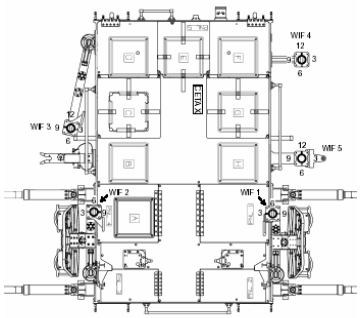 FS 18-34	<u>CETA CART 2 REMOVAL FROM P1</u> 1. Assist EV3 with APFR ingress, as reqd 2. On EV3 GO: Release brake (tap pedal twice) 3. Release wheel bogies (4) ❑ ❑ ❑ ❑ 4. Inform EV3 when brakes/wheel bogies are released, and Safety Tethers are clear 5. EV2: Provide GCA to EV3/M1 for clearances, as reqd 6. Verify CETA Cart 2 is clear of structure before translating 7. Verify CETA Cart 1 brake handles forward and locked 8. Retrieve S1 Crewlock Bag #3 and put on BRT (keep adj tether w/Crewlock Bag) <u>INSTALL CETA CART 2 ON S1</u> 9. Translate to starboard side of MT (via nadir path) 10. Verify MT coupler is in CAPTURE 11. Temp stow S1 Crewlock Bag #3 on S1 FHRC 12. Temp stow EVA camera outboard of CETA Cart 2 install location 13. Perform Get-Aheads (time permitting): ❑ S1 Tasks: SSAS BBC PNL RECONFIG, FLUID QD JUMPER, FHRC P-CLAMP RELEASE	<u>CETA CART 2 REMOVAL FROM P1</u> 1. Ingress SSRMS APFR. Use GCA , as reqd 2. Attach waist tether to ingress aid **<u>WARNING</u>** **Do not touch APFR Ingress Aid shaft for more than 2:30 min (after initial 1:30 hr of exposure)** 3. Inform M1/M2 APFR ingress is complete 4. √Glove heaters, visor, and TCV setting 5. Tether to CETA Cart 2 using RET. Use GCA, as reqd 6. Grasp CETA Cart 2 at grids B & H (recommended) 7. Give EV2 GO for CETA Cart 2 brake release and wheel bogie release 8. Receive report from EV2 that brakes/wheel bogies release 9. Give M1/M2 GO – Ready for CETA Cart 2 removal 10. Remove CETA Cart 2 from rails: Lift CETA Cart 2 from rails (ISS forward), until wheel bogies are clear of structure. Use GCA, as reqd 11. EV3: Inform M1/M2 CETA Cart 2 is separated from rail 12. Give M1/M2 GO for CETA Cart Port Clearance position maneuver <u>INSTALL CETA CART 2 ON S1</u>

EVA 3 CETA CART RELOCATION (01:00) (Cont)

IV/RMS	EV2 – Arnold (FF)	EV3 – Acaba (SSRMS)
	14. Verify safety tethers clear of CETA Cart 2 install area 15. Give M1/M2 GO for maneuver to CETA Cart 2 Delivery position. Use GCA, as reqd	
5. M1/M2: On EV2 GO, maneuver SSRMS to the CETA Cart 2 Delivery position	16. Rotate and lock wheel bogies (4) onto MT rail ❑ ❑ ❑ ❑ 17. Engage CETA Cart 2 Parking Brake 18. Give EV3 GO to release CETA Cart 2 and remove RET	13. Install CETA Cart 2 on rail
6. M1/M2: Receive EV3 report that APFR egress is complete		14. On EV2 GO, release CETA Cart 2 and remove RET 15. Inform M1/M2, EV3 is ready for APFR egress 16. Egress APFR. Use GCA, as reqd 17. EV3: Inform M1/M2 APFR egress for EV3 is complete (APFR ready for EV2 ingress, after tether swap)
7. IV receive glove inspection report from EV2	19. Inspect gloves/gauntlets. Report glove status to IV	
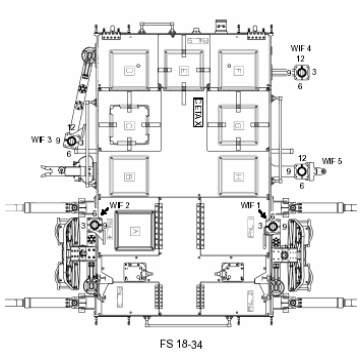	20. Perform prep for Safety Tether swap: Attach Waist Tether to handrail Verify tether configuration: ❑ √Gate closed ❑ √Hook locked 21. Swap to 55-ft SSRMS Safety Tether: ❑ √Gate closed ❑ √Hook locked ❑ √Safety Tether Reel Unlocked	18. Perform prep for Safety Tether swap: Attach Waist Tether to handrail Verify tether configuration: ❑ √Gate closed ❑ √Hook locked 19. Swap to EV2 85-ft airlock Safety Tether: ❑ √Gate closed ❑ √Hook locked ❑ √Safety Tether Reel Unlocked
8. M1/M2: Receive EV2 report that EV2 is ready for ingress and GCA, as reqd	22. Attach Waist Tether to ingress aid 23. EV2: Inform M1/M2, EV2 ready for APFR ingress. Use GCA, as reqd	
9. M1/M2: On EV2 GO, maneuver SSRMS to the Starboard Clearance position	24. Ingress APFR. When ingress complete: Give M1/M2 GO to perform Starboard Clearance maneuver	20. Provide clearance for SSRMS back away

EVA 3 CETA CART RELOCATION (01:00) (Cont)

IV/RMS	EV2 – Arnold (FF)	EV3 – Acaba (SSRMS)
NOTE IV: The next step is for M1/M2 and EV2, and requires no IV action 10. M1/M2: On EV2 GO, begin maneuver to OTCM 2 Blanket Setup position 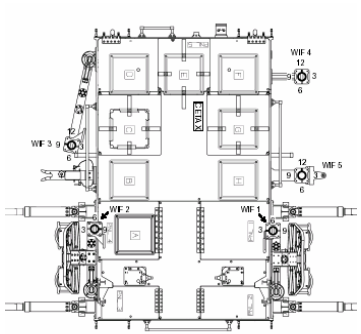 FS 18-34	25. Give M1/M2 GO to begin maneuver to OTCM 2 Blanket Setup position for SPDM COVERS	COUPLE CETA CART 2 TO MT 21. Verify configuration ready for CETA Cart 2 coupling to MT ❑ Brake handles (4) forward ❑ MT coupler in CAPTURE 22. Release brakes (tap pedal twice) 23. Translate CETA Cart 2 to MT 24. Couple CETA Cart 2 to MT ❑ Couple CETA Cart 2 to MT, max rate 0.5 ft/sec ❑ MT coupler to LOCK 25. Verify CETA Cart 2 brakes handles forward and locked 26. Retrieve EVA camera from temp stow location CLEANUP 27. Inspect gloves/gauntlets. Report glove status to IV 28. Translate to S1 for S1 TASKS

EVA 3 CETA CART RELOCATION – TASK DATA

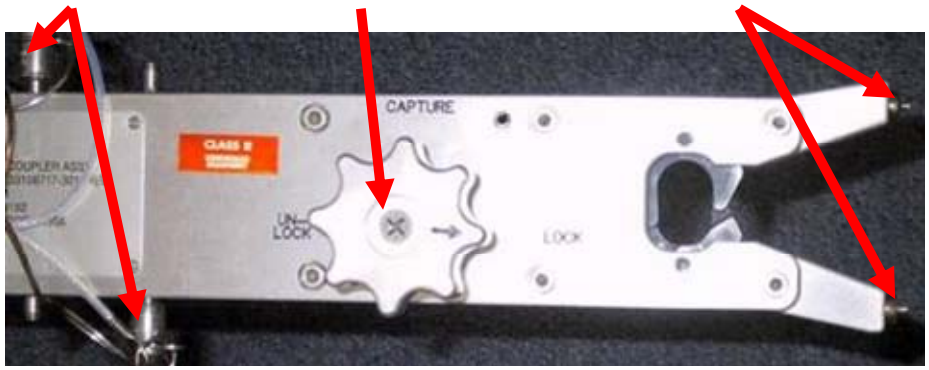

Active coupler

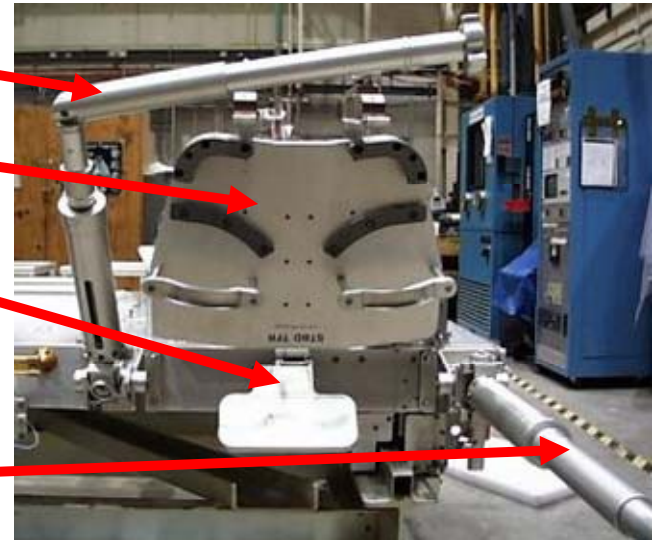

TFR and Brakes

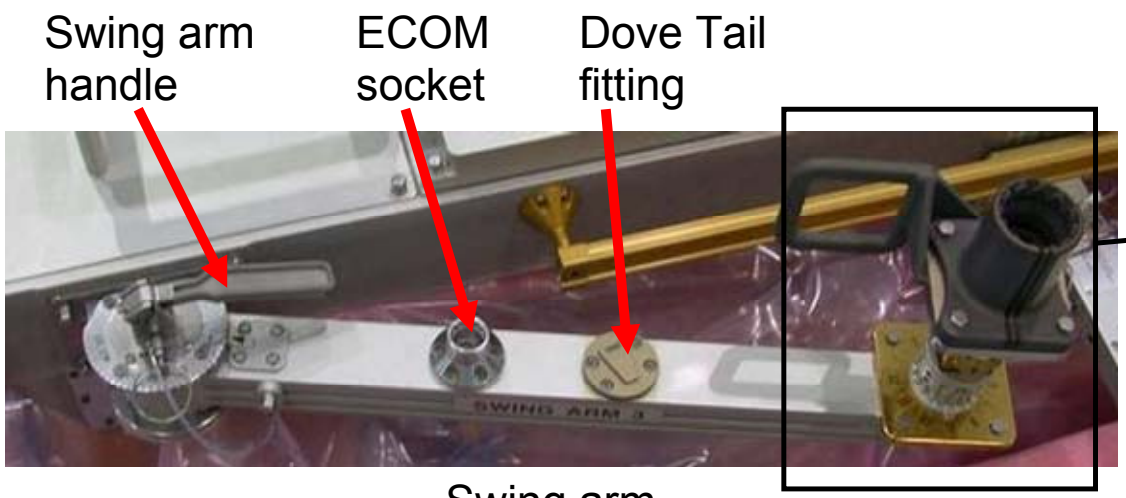

Swing arm

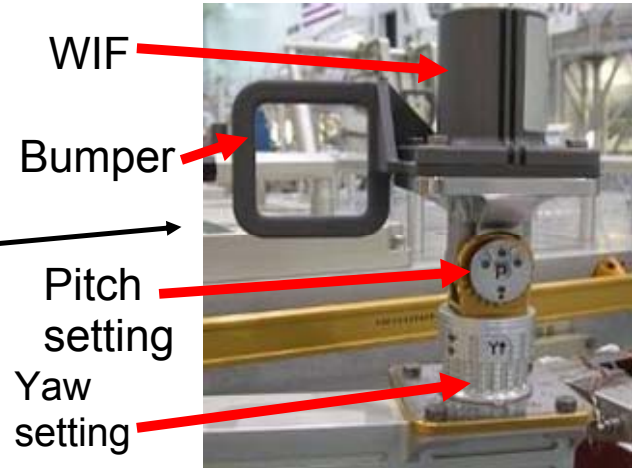

Swing Arm WIF

EVA 3 CETA CART RELOCATION – TASK DATA (Cont)

Tools: None

Foot Restraints:

Task	WIF	APFR Setting
CETA CART Install/Remove	SSRMS	12, PP, F, 6

EVA Fasteners: None

EVA Connectors: None

CETA Cart Mass = 560 lb

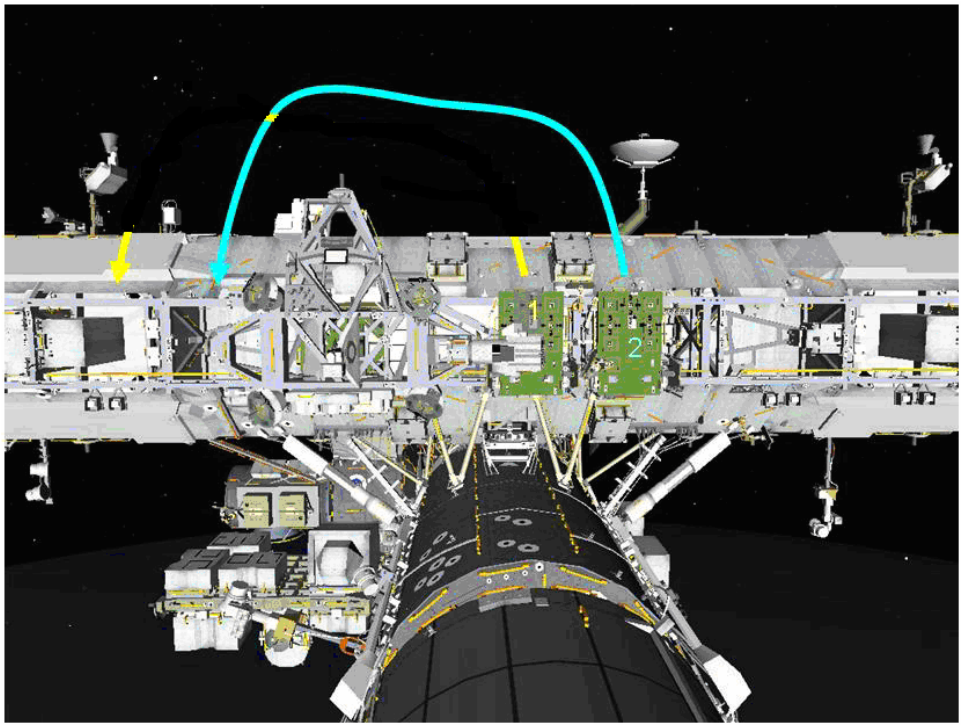

Timeline Considerations:

1. CETA carts must be moved to the starboard side of MT for STS-127 (2J/A) P6 Battery R&R (MT WS 8)

Notes:

1. Ensure safety tethers are clear of CETA cart during safety tether swap, CETA cart relocation, and CETA cart install
2. CETA to MT max coupling rate is 0.5 ft/sec; CETA to CETA max coupling rate is 1 in/sec
3. 3 of 4 wheel bogies are required to be installed prior to un-tethering (from a safety, fault tolerance standpoint). Can leave CETA Carts in this configuration – MT okay to translate

Cautions:

1. Do not impart loads into CETA cart with less than 3 of 4 wheel bogies engaged

Warnings:

1. None

EVA 3 SPDM COVERS (01:30)

IV/SSRMS	EV2 – Arnold (SSRMS)
1. M1/M2: On EV2 GO, maneuver SSRMS to SPDM OTCM 2 Blanket Maintenance position Expect EV2 GCA to position SSRMS for “2.6 Flaps” access 2. M1/M2: Expect EV2 GCA to position SSRMS for “Wrist Roll Flaps”, side 1 access 3. M1/M2: Expect EV2 GCA to position SSRMS/OTCM 2 for “Wrap Blanket” access 4. M1/M2: Expect EV2 GCA to position OTCM 2 for “Wrist Roll Flaps”, side 2 access 5. M1/M2: On EV2 GO, maneuver to OTCM 2 Blanket Setup position 6. M1/M2: Expect EV2 GCA to EP1 Blanket Removal position 7. M1/M2: Expect EV2 GCA to release EP1 quarter-turn fasteners	<u>OTCM COVER RECONFIGURATION</u> (00:30) 1. Adjust MWS down (increase clearance with SPDM), as reqd 2. Give M1/M2 GO to maneuver to OTCM 2 Blanket Maintenance position 3. GCA SSRMS to the “2.6 Flaps” position, as reqd 4. Mate “2.6 Flaps” (2) to corresponding Velcro patches (see “2.6 Flaps” – see detail on task data sheet) 5. GCA SSRMS for “Wrist Roll Flaps,” side 1 access, as reqd 6. Mate “Wrist Roll Flaps” (4) to corresponding Velcro patches (solid line and barber pole side must be closed first) (see task data sheet) 7. GCA SSRMS/OTCM 2 for “Wrap Blanket” access and to reach “Wrap Blanket” edge, as reqd 8. Pull out edge of “Wrap Blanket” which is rolled under itself (see task data sheet) 9. GCA OTCM 2 for “Wrist Roll Flaps,” side 2 access, as reqd 10. Mate “Wrist Roll Flaps” (4) to corresponding Velcro patches (solid line and barber pole side must be closed first) (see task data sheet) 11. When “2.6 Flaps,” “Wrist Roll Flaps,” and “Wrap Blankets” are reconfigured: Give M1/M2 GO to maneuver to OTCM 2 Blanket Setup position (OTCM 2 Blanket maintenance complete) <u>EP1 THERMAL BLANKET REMOVAL</u> (00:40) 12. When maneuver to OTCM 2 Blanket Setup position complete: Expect SSRMS OCAS maneuver to EP 1 Blanket Setup position (zenith) 13. Attach RET to adj tether 14. When maneuver to EP1 Blanket Setup position complete: Use GCA to maneuver SSRMS to the EP 1 Blanket Removal position 15. Release quarter-turn fasteners, as reqd, to fold back nadir end of EP1 cover 16. Attach adj tether to EP1 Blanket tether loop 17. Release quarter-turn fasteners (14 total) and lift corresponding tabs GCA SSRMS into position to reach fasteners, as reqd (see task data sheet) 18. Remove blanket from Electronics Platform 1 19. Wrap EP1 blanket with adjustable tether and stow behind MWS (need hands free for covering grounding patches, in next step) 20. On SPDM, fold over Velcro flaps to cover thermal blanket grounding patches (2) and Velcro patches (3), which are now exposed (see task data sheet for details on grounding patch locations)

EVA 3 SPDM COVERS (01:30) (Cont)

IV/SSRMS	EV2 – Arnold (SSRMS)
8. M1/M2: On EV2 GO, maneuver SSRMS to EP1 Blanket Setup position	SPDM CLEANUP (00:20) 21. When EP1 Blanket Removal complete: Give M1/M2 GO to maneuver to EP1 Blanket Setup position 22. Adjust MWS up, as reqd 23. Perform glove check
9. M1/M2: Inform EV2, maneuvering SSRMS to egress location (S0 HR 3416) Expect EV2 GCA during SSRMS maneuver to APFR egress position (EV2 airlock safety tether located at S0 3530 – port-nadir from HR 3416)	24. Expect M1/M2 to maneuver to EV2 SSRMS egress position Use GCA for maneuver to APFR egress position, as reqd 25. Inform M1/M2: EV2 is ready for APFR egress Egress APFR 26. Translate to S0 HR 3530 27. Perform Safety Tether Transfer to EV3 airlock 85-ft Safety Tether: ❑ √Gate closed ❑ √Hook locked ❑ √Safety Tether Reel unlocked
10. Expect EV2 GCA for APFR Removal	28. Use GCA to position SSRMS for APFR Removal, as reqd 29. Release/remove APFR from WIF adapter 30. Install **APFR [4,HH,F,6]** at WIF S0 WIF 45 (located on Face 6) ❑ √Blk-Blk, pull/twist test 31. RET to and remove WIF adapter from SSRMS 32. Remove 55-ft Safety Tether hook from SSRMS and attach to MWS
11. On EV2 GO: Maneuver SSRMS LEE Lube Clearance position	33. When APFR and Safety Tether removed from LEE: Give M1/M2 GO to maneuver to LEE Lube Clearance position 34. Stow 55-ft Safety Tether on S0 HR 3545 35. Stow EP1 Blanket on RET in med ORU bag 36. Stow WIF adapter on RET in med ORU Bag 37. Retrieve LEE B Lube Crewlock Bag #1 from HR 3546 38. Stow LEE Lube Crewlock Bag #1 on BRT

Post 1JA SPDM Configuration – Overview

Post 1JA SPDM Configuration

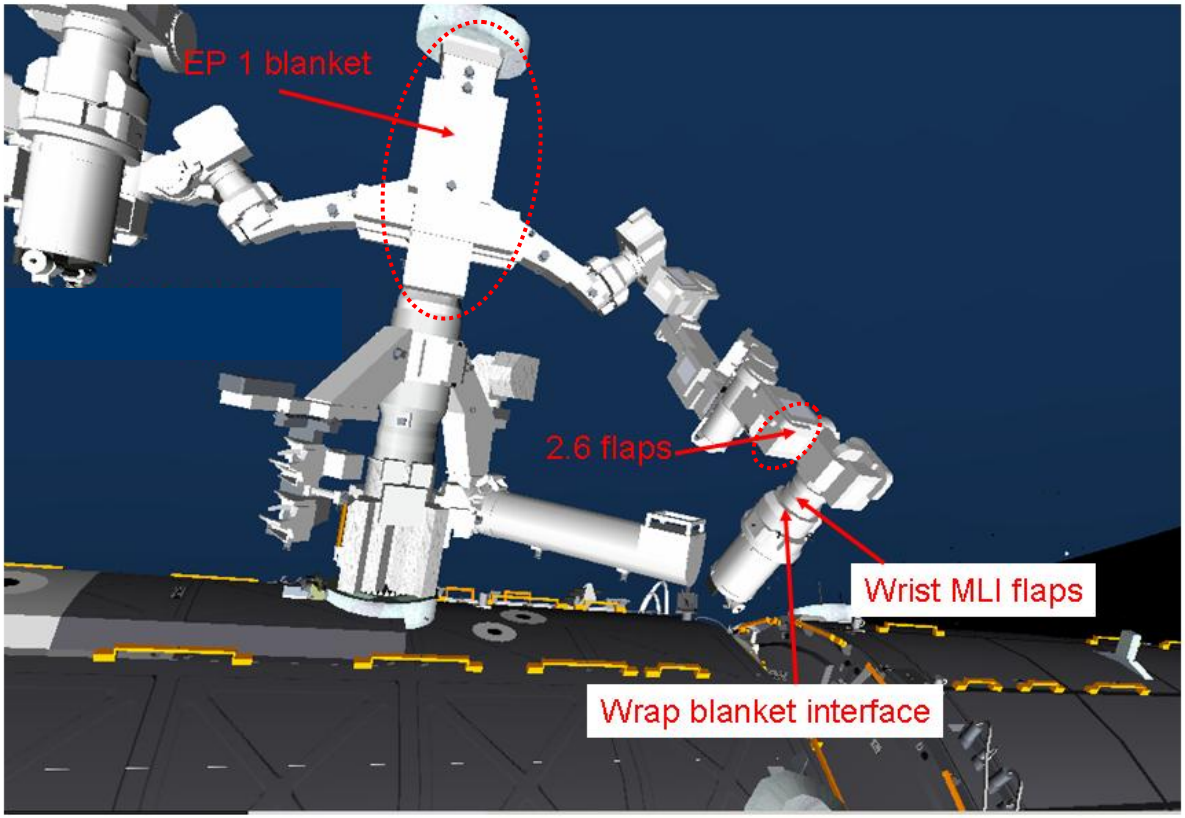

2.6 Flaps (SJEU) – Detail

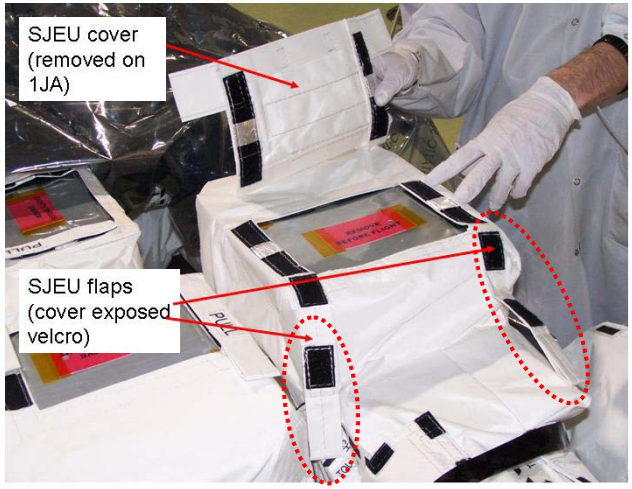

Wrap Blanket – Detail 1

EVA 3 SPDM COVERS – TASK DATA (Cont)

Wrist Roll Flaps – Detail

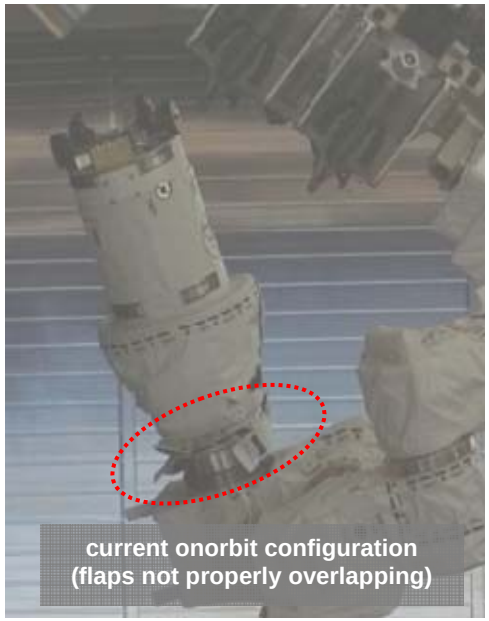

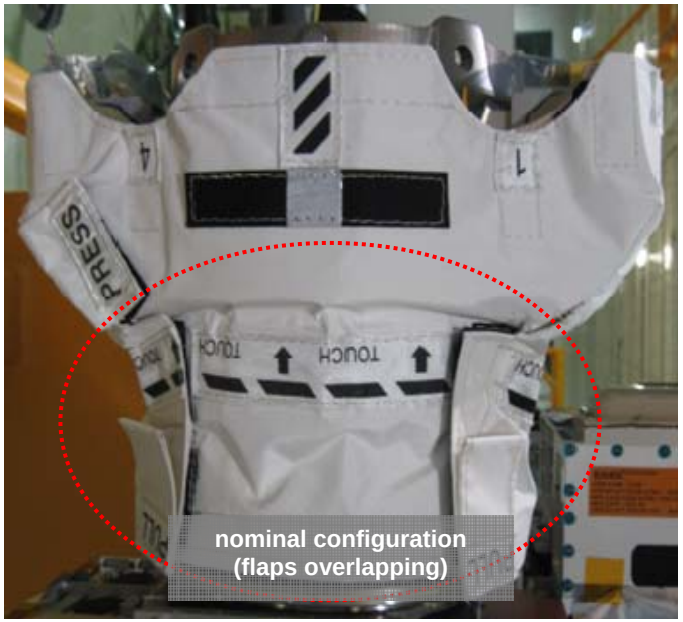

Wrap Blanket – Detail

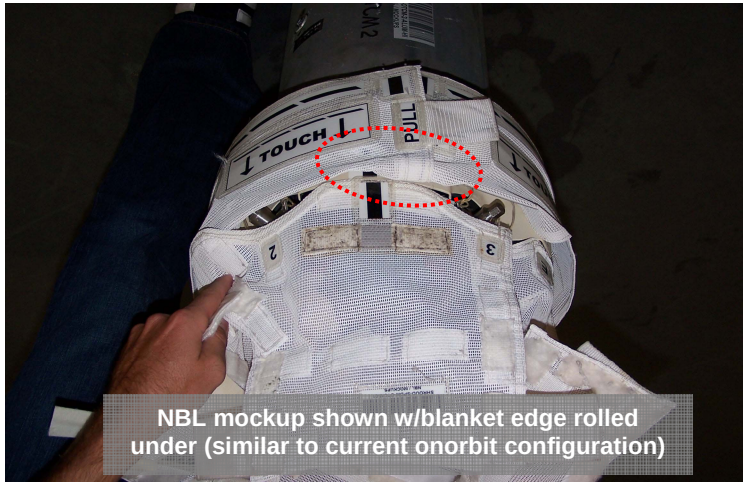

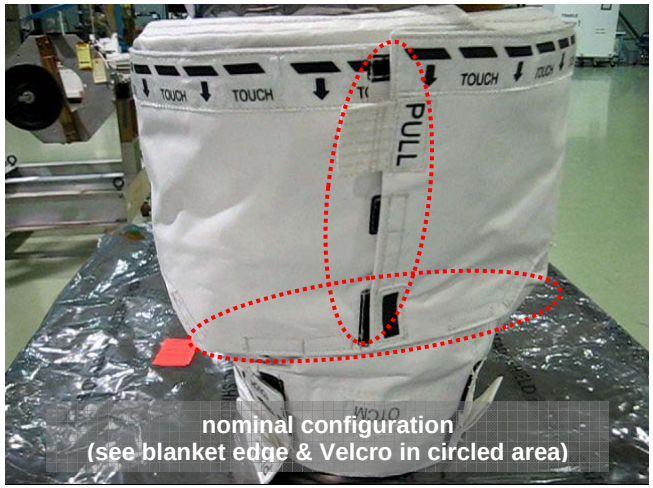

EP 1 Cover – Detail

EV2 head at this end
(nadir)

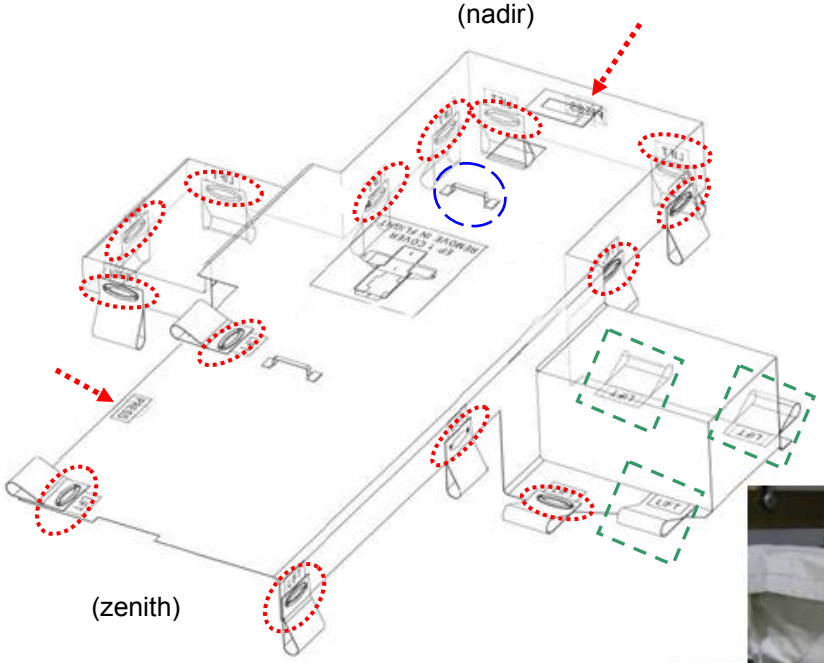

(zenith)

EP 1 Cover – View 1

EP 1 Cover ¼-Turn Fasteners

¼-Turn Fasteners (14) – Rotate to release EP Cover

NOTE: ¼-Turn Fasteners may require effort to complete the rotation to the 90 deg. release orientation

= indicates ¼-turn fastener location (14)

= indicates ground tab location (2)

= indicates tether point location (1)

= indicates Velcro patch location (3)

EP 1 Cover – View 2

EVA 3 LEE B REPAIR (01:45)

IV/SSRMS	EV2 – Arnold (FF)
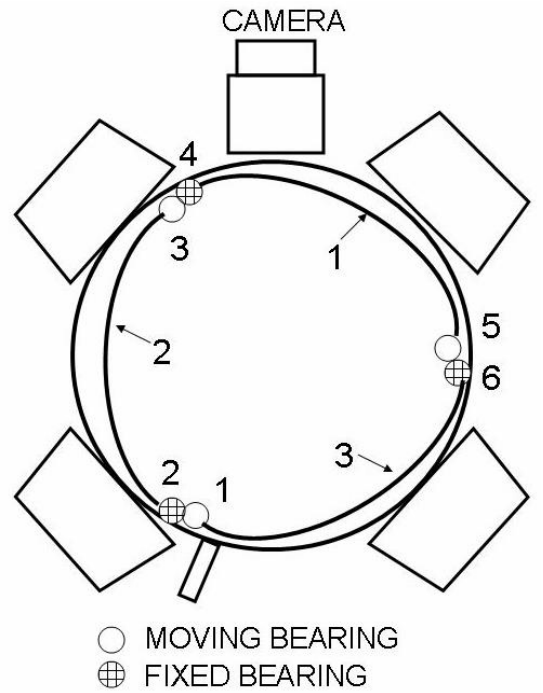	1. Ingress APFR 2. Adjust MWS down (increase clearance with SSRMS) 3. Deploy holster 4. Inform M1/M2, APFR ingress is complete 5. Give M1/M2 GO to maneuver to the LEE Lubrication position Use GCA to maneuver SSRMS to LEE Lubrication position, as reqd 6. Retrieve EVA Camera from Crewlock Bag. Take pictures of LEE: • Bearings #1 & #2 • Bearings #3 & #4 • Bearings #5 & #6 • Overall view of LEE 7. Stow EVA Camera on swing arm WARNING Avoid touching LEE curvic coupling, grounding springs, snares, and internal mechanisms inside LEE with gloved hand CAUTION Avoid inadvertent contact with LEE grounding springs, torsional springs, latch covers, shrouds, and camera Do not stress torsional spring more than 90 deg (rod-end perpendicular to LEE housing) when exercising bearing NOTE Grease should not extend more than ¼ inch from bearing

EVA 3 LEE B REPAIR (01:45) (Cont)

IV/SSRMS	EV2 – Arnold (FF)
1. M1/M2: Receive GO from EV2 for Snare Checkout 2. IV/**MCC-H**: Receive EV2 report on snare condition Prep grease gun: • Engage teeth by rotating plunger 180 deg (black triangle up) • Remove MLI. Stow on gun in way to prevent contact w/LEE • Point tip away from LEE • Rotate shutoff knob such that FLOW points toward nozzle Stow grease gun: • Disengage teeth by rot plunger 180 deg (black triangle down) • Rotate shutoff knob such that FLOW points ⊥ to nozzle • Install MLI tip cover 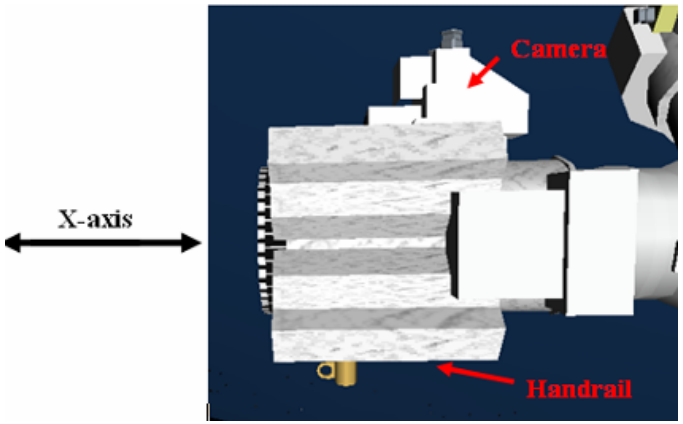	LEE B SNARE REPAIR (00:40) 8. Inform M1/M2, tools and EV crew clear of LEE. Give **SSRMS** GO for Snare Checkout (Close and Open Snares) 9. Report to IV/**MCC-H**: Snare condition (in or out of groove) 10. Push top right and bottom right snares (#1 & #3) into groove with needle nose pliers, as reqd 11. Use gap gauge to get left snare (#2) out of groove, as reqd (form "C" curve) 12. Exercise lower left outer bearing (#2) in x-axis using needle nose pliers [15 sec] 13. Report to IV/**MCC-H**: Bearing mobility (This report is used to calibrate the initial bearing stiffness) 14. Push left snare (#2) into groove with needle nose pliers 15. Prep grease gun 16. Apply grease to lower left bearings (#1 & #2) (use box pattern, apply to inside first). Pack grease using gap gauge, as reqd 17. Give M1/M2 GO to maneuver a +120 deg (ccw) wrist roll 18. Apply grease to lower left bearings (#3 & #4) (use box pattern, apply to inside first). Pack grease using gap gauge, as reqd 19. Give **SSRMS** GO to maneuver a +120 deg (ccw) wrist roll 20. Apply grease to lower left bearings (#5 & #6) (use box pattern, apply to inside first). Pack grease using gap gauge, as reqd 21. Stow grease gun 22. **GCA SSRMS** wrist roll to access both sides of lower right snare (#1), as reqd 23. Pull lower right snare (#1) fully out into C-curve with gap gauge, apply force perpendicular to rod-end 24. Prep grease gun 25. Apply grease to rod-end/fork interface to lower left bearing (#5) 26. Apply grease to rod-end/fork interface to lower right (#4) 27. Stow grease gun 28. Pack grease using gap gauge, as reqd 29. Use gap gauge to get snare out of groove, as reqd (form "C" curve) 30. Exercise lower left bearing (#5) in x-axis using needle nose pliers [1 min/40 cycles] 31. Report to IV/**MCC-H**: Noticeable change in bearing motion 32. Exercise lower right (#4) in x-axis using needle nose pliers [1 min/40 cycles] 33. Report to IV/**MCC-H**: Noticeable change in bearing motion 34. Push lower right snare (#1) into groove with needle nose pliers 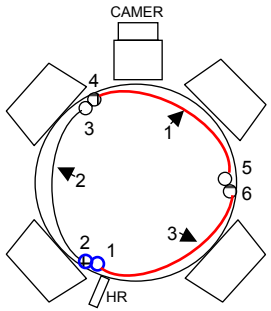 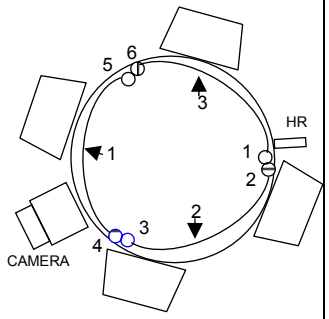 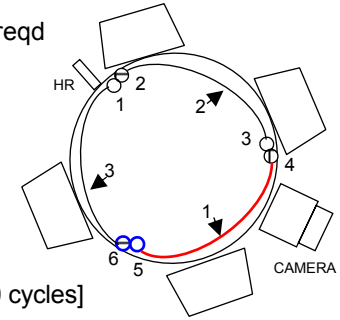

EVA 3 LEE B REPAIR (01:45) (Cont)

IV/SSRMS	EV2 – Arnold (FF)
Prep grease gun: • Engage teeth by rotating plunger 180 deg (black triangle up) • Remove MLI. Stow on gun in way to prevent contact w/LEE • Point tip away from LEE • Rotate shutoff knob such that FLOW points toward nozzle Stow grease gun: • Disengage teeth by rot plunger 180 deg (black triangle down) • Rotate shutoff knob such that FLOW points ⊥ to nozzle • Install MLI tip cover 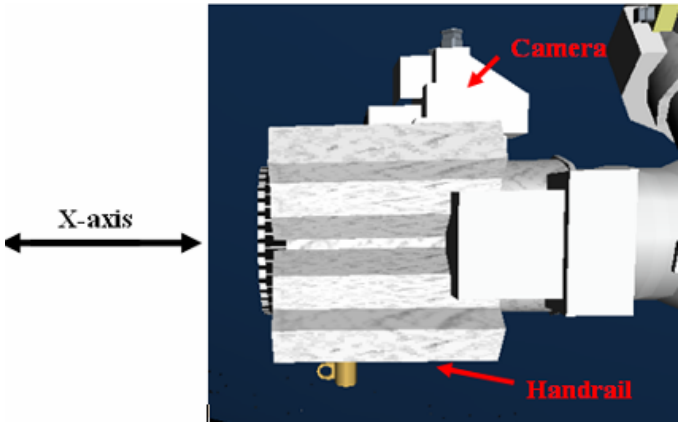	35. Give **SSRMS** GO to maneuver a -120 deg (cw) wrist roll 36. On **SSRMS** GO: Pull lower right snare (#2) fully out into C-curve with gap gauge, apply force perpendicular to rod-end 37. Prep grease gun 38. Apply grease to rod-end/fork interface to lower left bearing (#3) 39. Apply grease to rod-end/fork interface to lower right bearing (#2) 40. Stow grease gun 41. Exercise lower left bearing (#3) in x-axis using needle nose pliers [1 min/40 cycles] 42. Report to IV/**MCC-H**: Noticeable change in bearing motion 43. Exercise lower right bearing (#2) in x-axis using needle nose pliers [1 min/40 cycles] 44. Report to IV/**MCC-H**: Noticeable change in bearing motion 45. Push lower right snare (#2) into groove with needle nose pliers 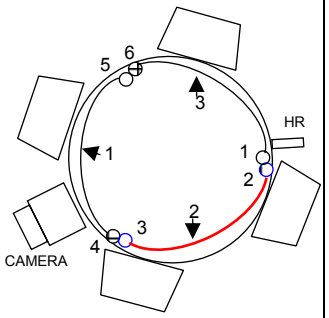 46. Give **SSRMS** GO to maneuver a -120 deg (cw) wrist roll 47. On **SSRMS** GO: Pull lower right snare (#3) fully out into C-curve with gap gauge, apply force perpendicular to rod-end 48. Prep grease gun 49. Apply grease to rod-end/fork interface to lower left bearing (#1) 50. Apply grease to rod-end/fork interface to lower right bearing (#6) 51. Stow grease gun 52. Exercise lower left bearing (#1) in x-axis using needle nose pliers [1 min/40 cycles] 53. Report to IV/**MCC-H**: Noticeable change in bearing motion 54. Exercise lower right bearing (#6) in x-axis using needle nose pliers [1 min/40 cycles] 55. Report to IV/**MCC-H**: Noticeable change in bearing motion 56. Push lower right snare (#3) into groove with needle nose pliers 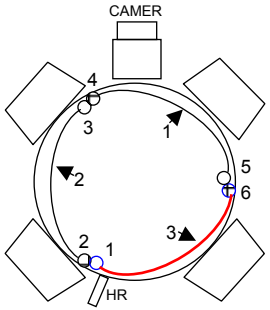 57. Use gap gauge to pack any excess grease into bearings, as reqd 58. Clean tools as necessary with EVA wipe

EVA 3 LEE B REPAIR (01:45) (Cont)

IV/SSRMS	EV2 – Arnold (FF)
3. M1/M2: Receive GO from EV2 for Snare Checkout 4. IV/**MCC-H**: Receive EV2 report on snare condition	LEE B CLEANUP (00:30) 59. Give **SSRMS** GO for Snare Checkout (Close and Open Snares) 60. Report to IV/**MCC-H**: Snare condition (in or out of groove) 61. Retrieve EVA Camera from Crewlock Bag. Take pictures of LEE: • Bearings #1 & #2 • Bearings #3 & #4 • Bearings #5 & #6 • Overall view of LEE 62. Stow EVA Camera in LEE Lube Crewlock Bag #1
5. M1/M2: Receive EV2 report: LEE photos, obs complete 6. M1/M2: On EV2 GO, maneuver SSRMS to LEE Lubrication Clearance position	63. Inform M1/M2, LEE photos and observation complete. Give **SSRMS** GO to maneuver SSRMS to LEE Lubrication Clearance position 64. Adjust MWS up, as reqd 65. Perform tool inventory
Tool Inventory MWS ❑ Small trash bag ❑ RET ❑ RETs w/PIP pin ❑ Adj tether ❑ Wire ties (2) BRT ❑ Wire ties (2) ❑ RET Swingarm ❑ Wire tie loop (holster) ❑ Grease gun ❑ EVA wipe Crewlock Bag ❑ Adj tether ❑ Adj tether ❑ EVA Wipes (2) ❑ EVA wipe w/ wire tie ❑ Needle nose plyers ❑ RCC Gap gauge	
	66. Place EVA wipe over end of grease gun and secure with wire tie 67. Stow grease gun on outside of Crewlock Bag using adj tether 68. Egress APFR 69. Stow APFR ingress aid 70. Relocate APFR to S0 WIF 42 ❑ √Blk-Blk, pull/twist test 71. Adjust APFR to low-profile configuration and report settings to IV
7. IV: Record APFR settings: **[__, __, __, __]** (S0 WIF 42) 8. Receive glove check report from EV2	72. Inspect gloves/gauntlets. Report glove check to IV 73. Translate to med ORU Bag (S0 HR 3528) 74. Stow LEE Lube Crewlock Bag #1 near med ORU Bag location If EV2 performing P1 1A_A REMOVE/REPLACE: 75. Retrieve PGT. Stow PGT on swing arm 76. Go to P1 1A_A RPCM REMOVE/REPLACE

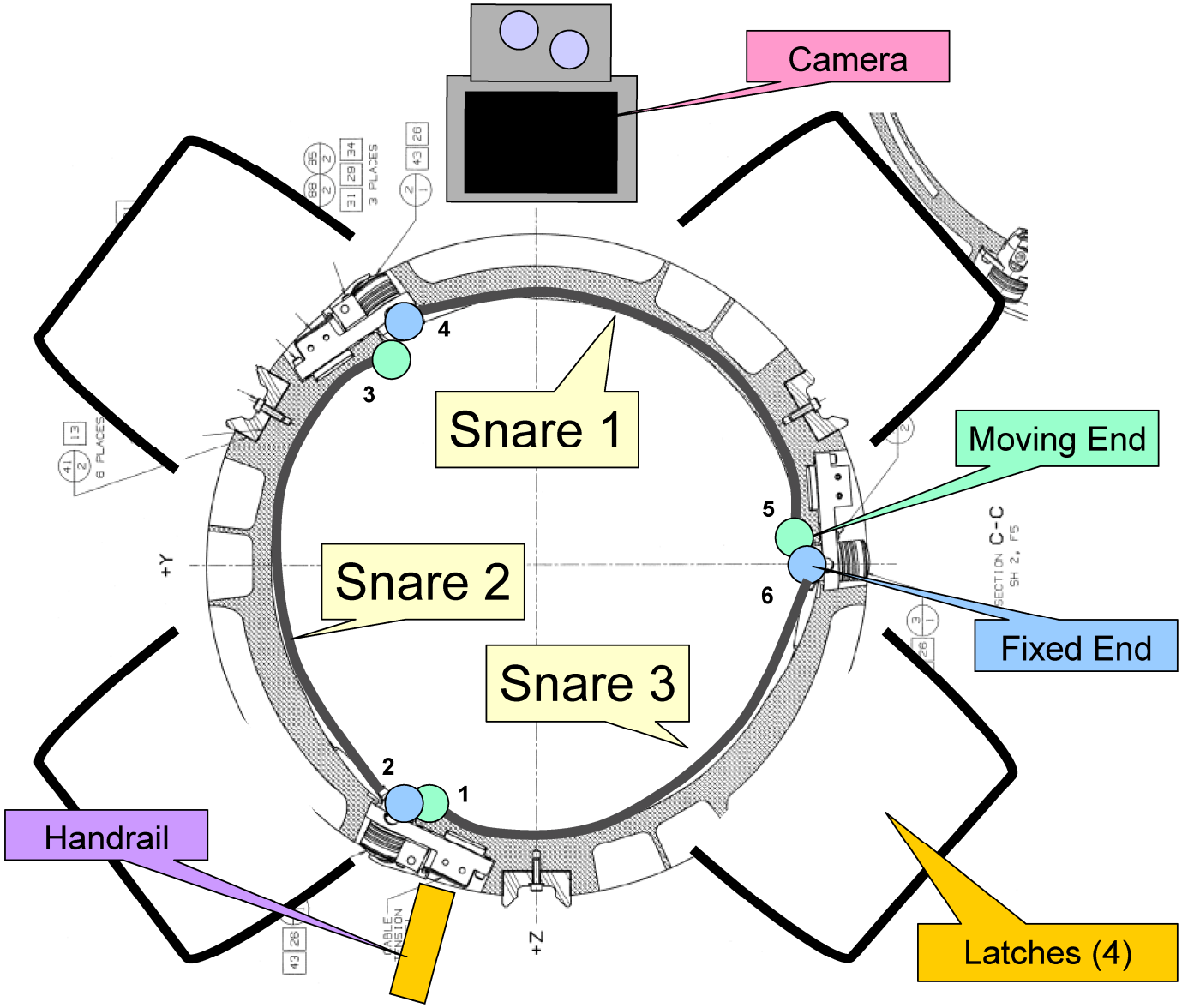

Figure 1. LEE Face – Overview

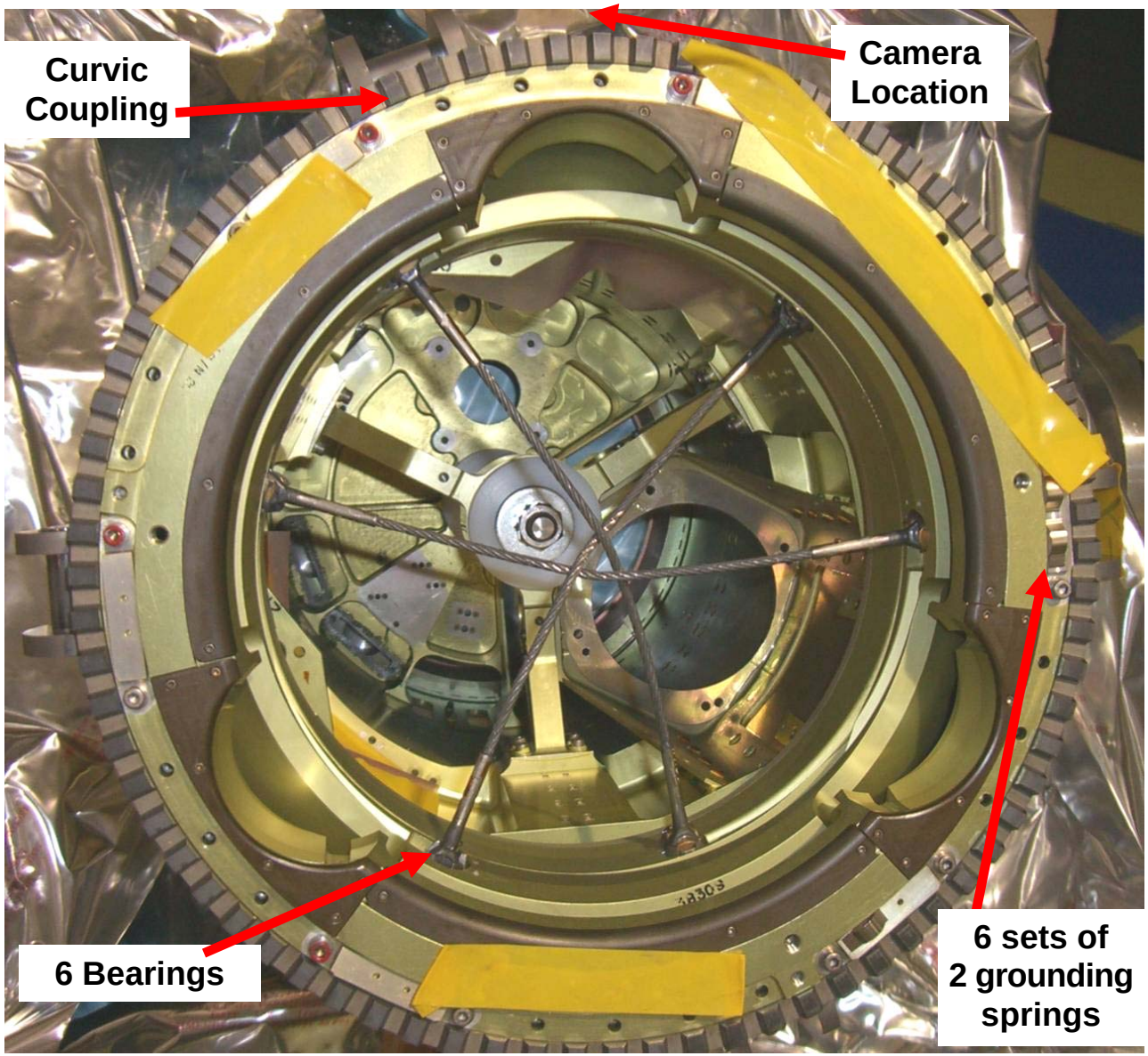

Figure 2. LEE Face – Overview (Cont)

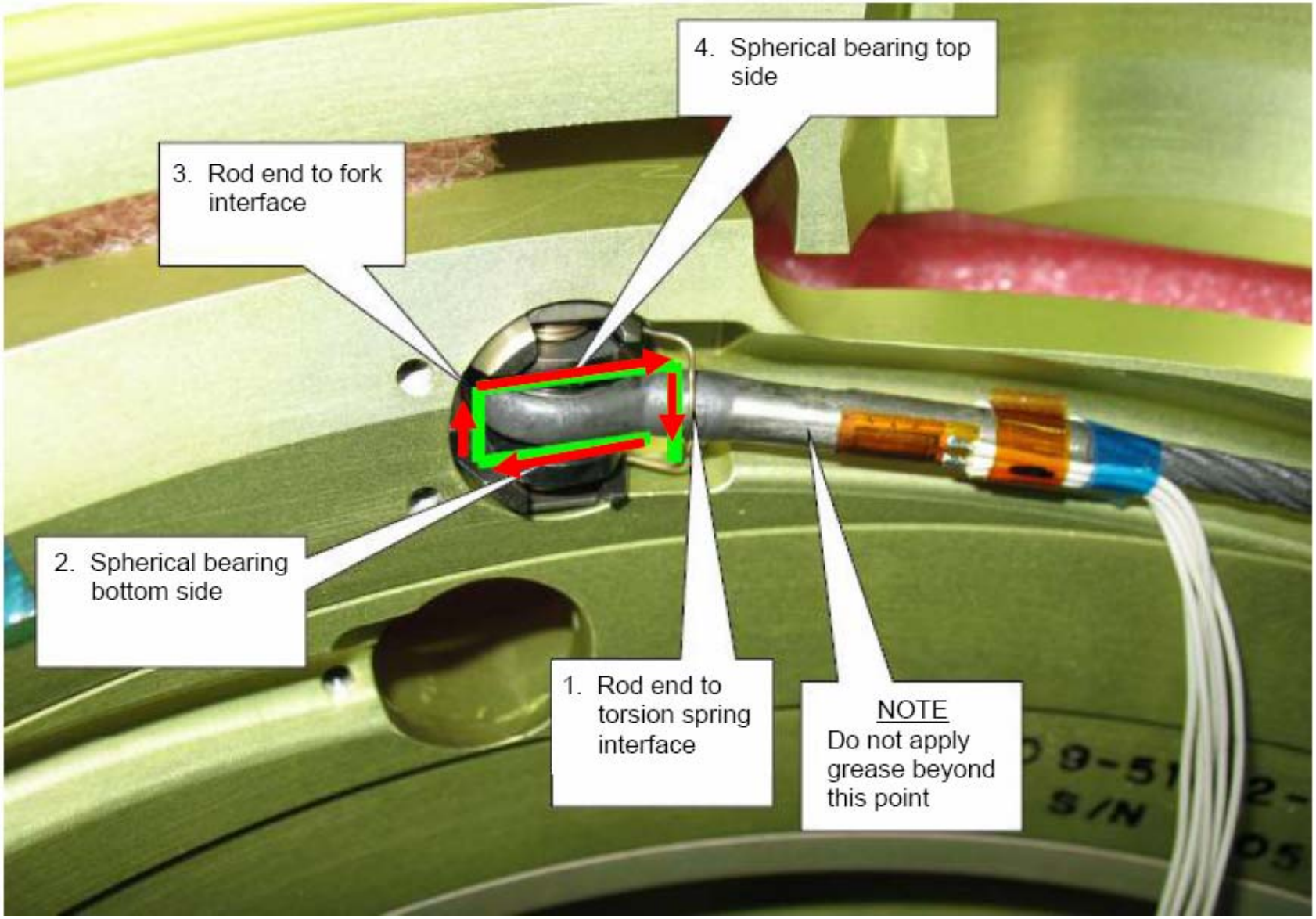

Figure 3. LEE Lubing Pattern

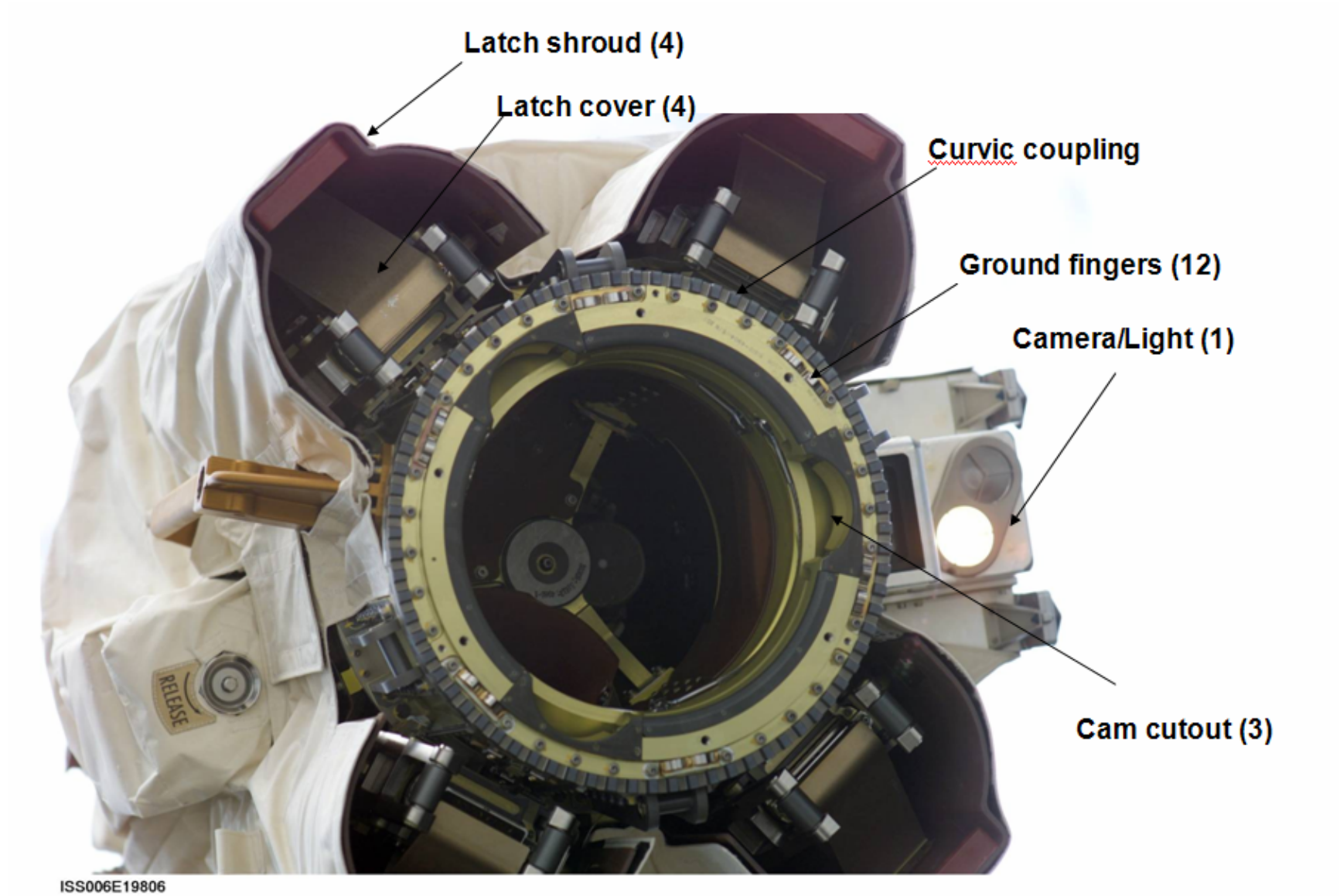

Figure 4. LEE Face

EVA 3 LEE B REPAIR – TASK DATA (Cont)

Estimated Task Duration:

	With SSRMS	Without SSRMS
One EV Crew	01:45	N/A
Two EV Crew	N/A	N/A

Tools:

EV3	
Crewlock Bag	RETs (2)
Gap gauge w/Kapton Tape	Grease Gun w/Straight Nozzle
Needle nose pliers w/ Kapton tape	EVA Wipes (5)
EVA Camera	

Foot Restraints:

Task	WIF	Y/P Setting	APFR Setting
LEE B SNARE REPAIR	S0 WIF 45		4, HH, F, 6

EVA Fasteners: N/A

EVA Connectors: N/A

LEE Mass = ~460 lb/209 kg

Notes:

1. Grease should not extend more than ¼ inch from bearing

Cautions:

1. Avoid inadvertent contact with LEE grounding springs, torsional springs, latch covers, shrouds, and camera
2. Do not stress torsional spring more than 90 deg (rod-end perpendicular to LEE housing) when exercising bearing

Warnings:

1. Avoid touching LEE curvic coupling, grounding springs, snares, and internal mechanisms inside LEE with gloved hand

Timeline Considerations:

1. Photos shall be taken as best effort, noting that it is possible that the LEE may be in an eclipse
2. Inhibits for SSRMS brakes and trigger-safe are controlled in Robotics procedures. SSRMS will give EV2 GO each time inhibits are in place and ready for EVA LEE work
3. Time permitting, **MCC-H** may request additional cycles for sticky bearings

Grease Gun Steps:

Prep grease gun

1. Engage teeth by rotating plunger 180 deg (black triangle up)
2. Remove MLI; stow on gun in way to prevent contact with LEE
3. Point tip away from LEE
4. Rotate shutoff knob such that FLOW points toward nozzle

Stow grease gun

1. Rotate shutoff knob such that FLOW points perpendicular to nozzle
2. Disengage teeth by rotating plunger 180 deg (black triangle down)
3. Install MLI tip cover

EVA 3 S1/S3 SSAS PANEL BBC RECONFIG (00:30)

IV	EV3 – Acaba (FF)
1. Verify with **MCC-H** that inhibits are in place 2. Give EV GO to perform connector swaps S1-S3 SSAS Panel BBC Inhibits (16) A. RPCM S13A G RPC 01 – Open, Close Cmd Inhibit RPC 02 – Open, Close Cmd Inhibit RPC 13 – Open, Close Cmd Inhibit RPC 14 – Open, Close Cmd Inhibit RPC 15 – Open, Close Cmd Inhibit B. RPCM S12B A RPC 05 – Open, Close Cmd Inhibit RPC 11 – Open, Close Cmd Inhibit RPC 13 – Open, Close Cmd Inhibit C. RPCM S14B G RPC 01 – Open, Close Cmd Inhibit RPC 05 – Open, Close Cmd Inhibit RPC 13 – Open, Close Cmd Inhibit RPC 14 – Open, Close Cmd Inhibit RPC 15 – Open, Close Cmd Inhibit D. RPCM S11A A RPC 03 – Open, Close Cmd Inhibit RPC 04 – Open, Close Cmd Inhibit RPC 13 – Open, Close Cmd Inhibit If BRT used on oval HR: 3. Request EV3 to perform inspection of oval HR, after BRT is released 4. Receive inspection report from EV3 5. Request EV3 to perform glove check 6. Receive glove check report from EV3	SSAS BBC CONNECTOR SWAPS (00:30) 1. On IV GO: Demate caps/connectors and swap with terminator caps NOTE √Connectors for straight pins, no FOD, EMI band intact, and good bend radius If BRT on oval HR is required, inspect contact area prior to attaching the BRT and again after the BRT is released Panel A102 (zenith): 2. ❑ Remove cap from J195 3. ❑ Demate P116 from J116 4. ❑ Install cap on J116 5. ❑ Inspect and Mate P116 to J195 6. ❑ Check good bend radius Panel A103 (nadir): 7. ❑ Remove cap from J196 8. ❑ Demate P121 from J121 9. ❑ Install cap on J121 10. ❑ Inspect and Mate P121 to J196 ❑ Check good bend radius 11. If BRT used on oval HR, inspect HR for change at contact area 12. Perform glove check. Report status to IV 13. Translate to S1 – S3 Fluid Jumper Task/worksite

EVA 3 S1/S3 FLUID QD JUMPER INSTALL (00:35)

IV	EV3 – Acaba (FF)
1. Verify with **MCC-H** that TRRJ inhibits are in place for translation to S1/S3 worksite 2. Give GO to EV3 to translate to S1/S3 DEMATE QD 1.√Forward white band visible, button up 2. Demate QD (pull back on release ring) MATE QD 1. Inspect QDs for FOD or damage 2.√Detent button is up 3.√Forward white band is NOT visible 4. Assess side loads 5. Mate QD. √Forward white band is visible 6. Perform snap back test (√Fwd white band is visible) 7. Perform pull test 8. Perform gap check (visual) OPEN VALVE 1. Press button, move bail forward (open valve) 2.√Aft white band visible, button up 3. Verify detent button can be depressed 3. Receive glove check from EV3	S1/S3 FLUID JUMPER INSTALL (00:35) CAUTION QDs exposed to direct sunlight can overtemp in 20 min. Shading by EMU or thermal shroud can lengthen acceptable time with bootie removed On IV GO: 1. Translate to S1/S3 Face 6 (nadir) interface 2. Open shroud on S1 nadir umbilical tray 3. Release TA clamps, as reqd 4. For QDs F56, perform DEMATE QD steps in the IV column 5. Open thermal bootie and remove QD cap from M3 on S1 Panel A503. Stow cap in trash bag 6. Open thermal bootie and remove QD cap from M1 on S3 panel A501. Stow cap in trash bag 7. Attach RET to jumper 8. For QDs F57, perform DEMATE QD steps in the IV column 9. BRT to HR 3010 10. Perform MATE QD steps in IV column to mate QD F57 to M3 on S1 panel A503 11. For QD F57, perform OPEN VALVE steps in IV column 12. Perform MATE QD steps in IV column to mate QD F56 to M1 on S3 panel A501 13. For QD F56, perform OPEN VALVE steps in IV column 14. Reinstall thermal booties (2) 15. Close TA clamps, as reqd 16. Perform WVS survey of jumper connections 17. Replace S1 nadir umbilical tray shroud 18. Inspect EMU gloves/gauntlets. Report glove status to IV 19. Translate to S1 for FHRC P-Clamp Release

EVA 3 S1 FHRC P-CLAMP RELEASE (01:05)

IV		EV3 – Acaba (FF)
S1 FHRC P-Clamps: Bay 11 Stinger (6) – diagram on next page Bay 13 Hose Box (6) – diagram on next page 1. Request EV3 tool inventory Receive EV3 tool inventory report 2. Request EV3 to perform glove inspection Receive EV3 glove inspection report Tool Inventory MWS ❑ Sm Trash bag ❑ RET w/PIP pin ❑ RET ❑ Wire ties (2) Swing Arm ❑ PGT ❑ 6-in wobble ext ❑ RET Crewlock Bag ❑ Ratchet wrench ❑ 2-in socket ext ❑ RET w/PIP pin ❑ 18-in socket ext ❑ RET w/PIP pin ❑ EVA Camera ❑ RET		RELEASE FHRC P-CLAMPS Stinger (Inboard) (00:30) 1. Retrieve 18-in ext from Crewlock Bag #3 and install on PGT 2. **PGT** [**A7** 9.2 ft-lb, **CCW2** 30 rpm, MTL **30.5**] – 7/16-18-in ext: Release Stinger P-Clamps (6), any order, ~7-12.5 turns 3. Stow 7/16-18-in ext in Crewlock Bag #3 4. Install 6-in extension on PGT 5. Retrieve ratchet w/2-in from Crewlock Bag #3 to MWS Hose Box (Outboard) (00:25) 6. **PGT** [**A7** 9.2 ft-lb, **CCW2** 30 rpm, MTL **30.5**] – 7/16-6-in ext: Release Hose Box P-clamps (6). Start at end furthest from QD, ~7-12.5 turns 7. Perform tool inventory 8. Stow EVA Camera in Crewlock Bag #3 9. Inspect gloves/gauntlets. Report glove status to IV 10. Retrieve S1 Tasks Crewlock Bag #3 and attach to BRT FHRC P-CLAMP CLEANUP (00:10) 11. Translate to med ORU Bag (S0 Face 2) 12. Stow S1 Tasks Crewlock Bag #3 at med ORU Bag location 13. Retrieve S0 1A_D RPCM Crewlock Bag #4 Attach S0 RPCM Crewlock Bag #4 to BRT 14. On **MCC-H** GO, translate to S0 outboard for S0 1A_D RPCM REMOVE/REPLACE

EVA 3 S1 FHRC P-CLAMP RELEASE – TASK DATA

FHRC P-Clamps – Hose Box (Outboard)

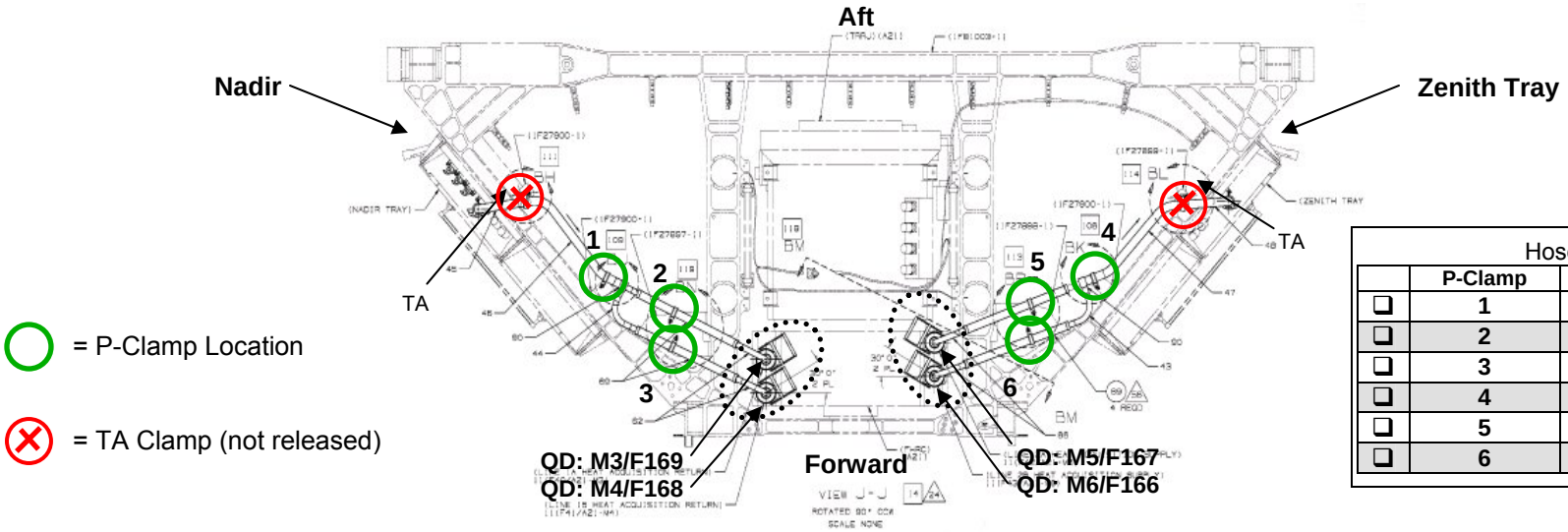

Hose Box

	P-Clamp	Tool	Socket
❑	1	PGT	6-in ext
❑	2	PGT	6-in ext
❑	3	Ratchet	2-in ext
❑	4	PGT	6-in ext
❑	5	PGT	6-in ext
❑	6	Ratchet	2-in ext

FHRC P-Clamps – Stinger (Inboard)

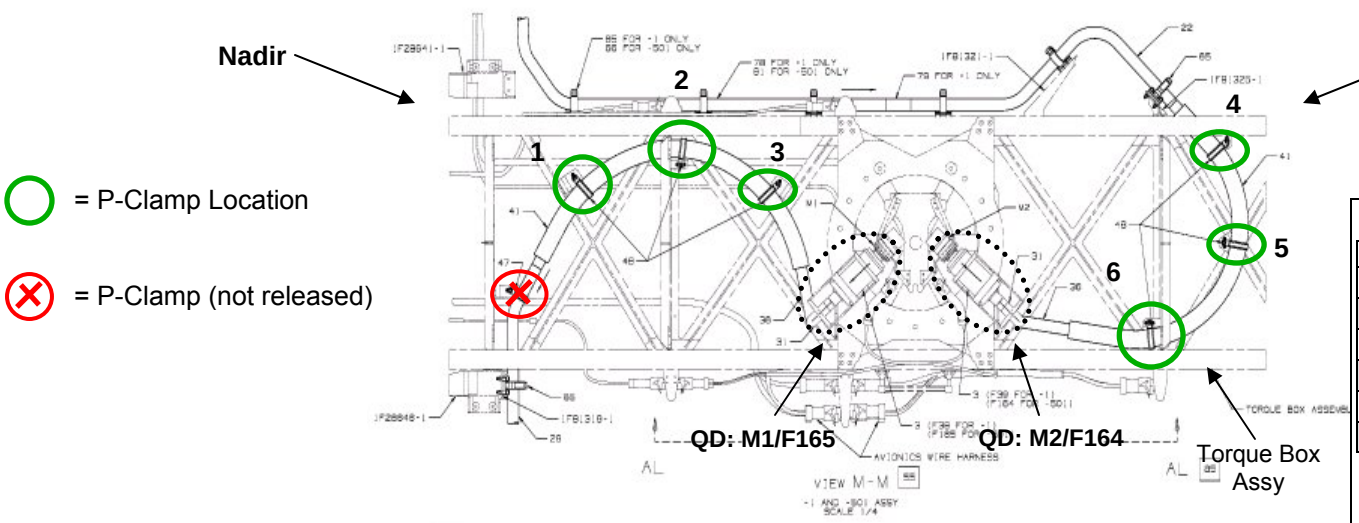

Stinger

	P-Clamp	Tool	Socket
❑	1	PGT	6- or 18-in ext
❑	2	PGT	6- or 18-in ext
❑	3	PGT	6- or 18-in ext
❑	4	PGT	6- or 18-in ext
❑	*5	PGT	18-in ext
❑	^6	PGT	6- or 18-in ext

*18-in required for this bolt
^18-in doable w/difficulty

EVA 3 S0 1A_D RPCM REMOVE/REPLACE (00:45)

IV	EV3 – ACABA (FF)	
NOTE CETA lights will be turned off due to DDCU power-down	CAUTION Avoid contact to SPDA Radiator (Face 3) to prevent hardware damage 1. Translate to S0 RPCM location (HR 3490) (with S0 1A_D RPCM Crewlock Bag #4) 2. Temp stow S0 1A_D RPCM Crewlock Bag #4. Translate to S0 HR 3490 3. Slide port door open but don't open fully to avoid detents from catching 4. BRT to S0 HR 3484 WARNING Edges of RPCM housing may be sharp. Use caution while handling CAUTION Failure to align and fully seat socket until lock springs have released can result in damage to RPCM Drive Screw Assembly Combined linear and rotational motion on the socket while inserting, can result in damage to RPCM Drive Screw Assembly Failure to use wobble socket, or socket with equivalent outer diameter, to release l lock springs can result in damage to the RPCM Drive Screw Assembly Do not operate drive screw with scoop attached to microconical. The wobble socket feature will not extend thru the round scoop	NOTE Equipment Hook shown in correct orientation for R&R Gate away from RPCM

EVA 3 S0 1A_D RPCM REMOVE/REPLACE (00:45) (Cont)

IV	EV3 – ACABA (FF)	
MCC-H: 1. Verify S0 RPCM Inhibits in place (√DDCU S01A Converter – Off), give EV GO for removal 2. Record Failed RPCM s/n _____ (expect s/n C024088) 3. Record Spare RPCM s/n _____ (expect s/n C235299) 4. IV record S0 1A_D RPCM Drive Screw Installation Data Turns: _____ Torque: _____ 5. Receive glove check report from EV2	On IV GO, perform the following RPCM R&R steps: 5. Verify failed RPCM 1A_D is s/n C024088 6. Tether to RPCM with gate pointing away from RPCM 7. **PGT** [**A6** 8.3 ft-lb, **CCW2** 30 RPM, MTL 30.5]-6ext 7/16 ❑ Release Drive Screw, push while turning, ~8 turns 8. √Status Indicator – UNLOCK 9. Install scoop, as reqd 10. Remove failed RPCM (slide off rail) 11. Stow failed RPCM 12. Inspect guide rail for debris/damage 13. Retrieve spare RPCM 14. Verify spare RPCM s/n (expect C235299) 15. Verify proper hook orientation on new RPCM (gate away from RPCM) 16. Install RPCM on guide rail and slide into soft dock 17. √Status Indicator not below UNLOCK 18. **PGT** [**A2** 3.8 ft-lb, **CW2** 30 RPM, MTL 30.5]-6ext 7/16 ❑ Fasten Drive Screw, push while turning, 6-7 turns to hard stop 19. √Status Indicator – LOCK 20. EV3 report torque and turns 21. Slide door closed, verify door does not slide freely and √alignment mark 22. Close S0 1A_D RPCM Crewlock Bag #4. Attach S0 1A_D Crewlock Bag #4 to BRT 23. Inspect gloves/gauntlets. Report glove status to IV 24. Translate to med ORU Bag (S0 HR 3528) 25. Stow S0 1A_D RPCM Crewlock Bag #4 in med ORU Bag If EV3 performing P1 1A_A RPCM R&R: 26. Go to P1 1A_A RPCM R&R	NOTE Equipment Hook shown in correct orientation for R&R Gate away from RPCM

EVA 3 S0 1A_D RPCM REMOVE/REPLACE – TASK DATA

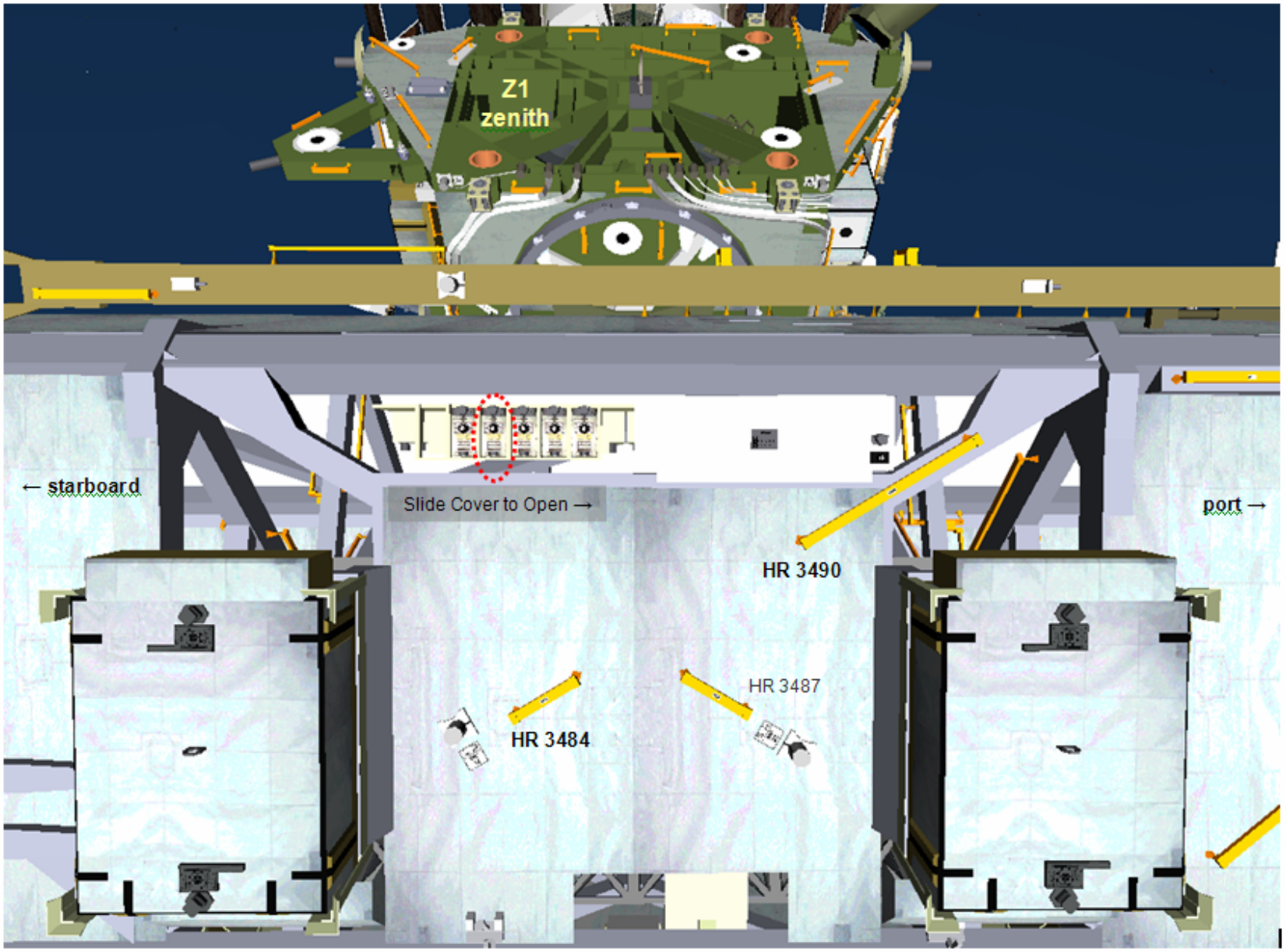

SPDA Radiator – No Contact
(Face 3)

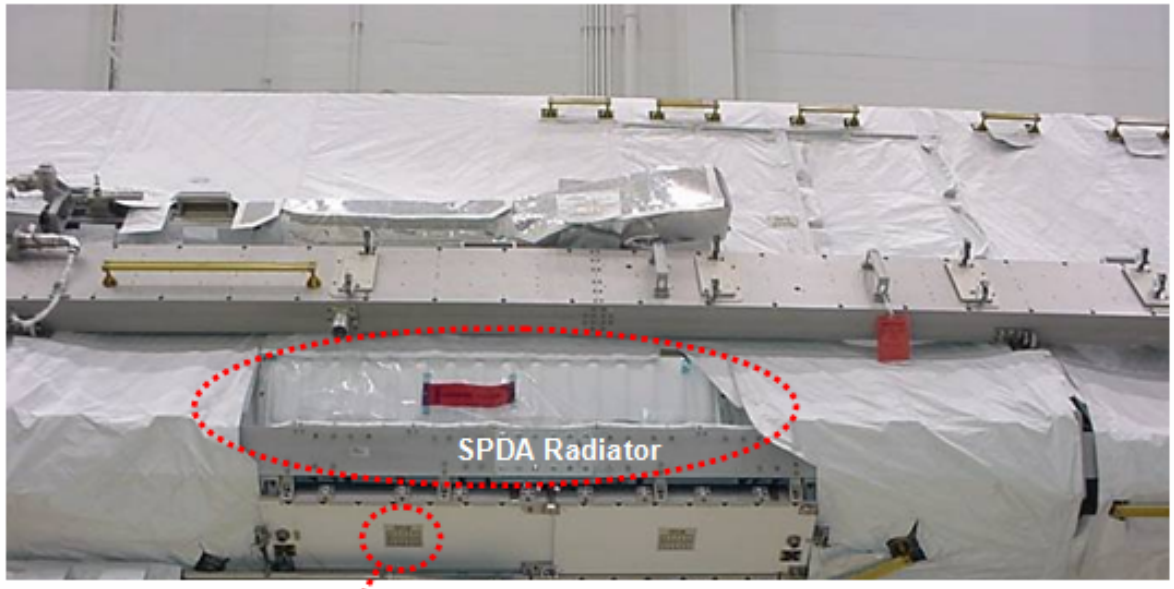

Figure X

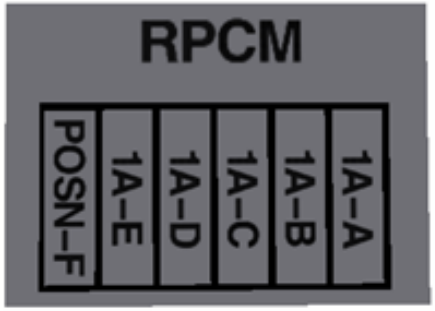

EVA 3 S0 1A_D RPCM REMOVE/REPLACE – TASK DATA (Cont)

Tools:

EV3
PGT
7/16 Socket-9 ext
Round scoop
Russian Tie-down tether

EVA Fasteners:

Fastener Name	Head Size	Qty	Install Torque (ft-lb)	Release Torque (ft-lb)	Failure Torque (ft-lb)	Turns	RPM
RPCM Drive Screw	7/16	1	5.5 (gnd) 3.8 (orbit)	4.5	18.6 (remove) 8.5 (install)	8 (remove) 6-7 (install)	30
SPDA Door Bolts	7/16	2	7.08 (gnd)	8.3	14.27	13	30

EVA Connectors: None

ORU Identification:

	Part Number	Serial Number
Spare RPCM	R077419-61	C235299
Failed RPCM	R077419-61	C024088

Notes:

1. The round scoop is removed for bolt driving operations to allow for visual verification of socket engagement on the drive screw
2. Installation of tether on RPCM tether point must be oriented such that the hook is facing the body of the RPCM. Otherwise, interference between the SPDA frame and the RPCM will not allow hook removal

Cautions:

1. Failure to use wobble socket, or socket with equivalent outer diameter, to release l lock springs can result in damage to the RPCM Drive Screw Assembly
2. Do not operate drive screw with scoop attached to microconical. The wobble socket feature will not extend thru the round scoop
3. Failure to align and fully seat socket until lock springs have released can result in damage to RPCM Drive Screw Assembly
4. Combined linear and rotational motion on the socket while inserting, can result in damage to RPCM Drive Screw Assembly
5. If worksite is left unattended at any time with just Bolt 7 and the tether tie down, the tether must be cinched snug

Warnings:

1. RPCM may have sharp edges; use caution while handling

RPCM Tether Orientation

EVA 3 P1 1A_A RPCM REMOVE/REPLACE (00:45)

IV	EV2/EV3 (FF)	
NOTE CETA lights will be turned off due to DDCU power-down 1. Verify with **MCC-H**: P1 RPCM Inhibits in place (√DDCU S01A Converter – Off) or RPCM S01A_A RPC 01 Open, Close Inhibited), then: IV give EV2 GO for RPCM R&R	WARNING Edges of RPCM housing may be sharp, use caution while handling Maintain minimum 1 ft clearance from P1 antenna (radomes) during translation CAUTION Failure to align and fully seat socket until lock springs have released can result in damage to RPCM Drive Screw Assembly Combined linear and rotational motion on the socket while inserting, can result in damage to RPCM Drive Screw Assembly Failure to use wobble socket, or socket with equivalent outer diameter, to release l lock springs can result in damage to the RPCM Drive Screw Assembly Do not operate drive screw with scoop attached to microconical. The wobble socket feature will not extend thru the round scoop 1. Translate to med ORU Bag at S0 3528, as reqd 2. Retrieve P1 1A_A Crewlock Bag #2 and stow on BRT 3. Translate to 55-ft Safety Tether at S0 3545 4. Perform Safety Tether swap to 55-ft Safety Tether: ❑ √Gate closed ❑ √Hook locked ❑ √Safety Tether Reel unlocked ❑ Remove 85-ft Safety Tether and stow on S0 HR 3545 5. Translate to P1 1A_A RPCM worksite (access via Fwd Face – zenith) 6. Stow P1 1A_A Crewlock Bag #2 on P1 HR 3680 7. Attach BRT to P1 HR 3672	NOTE Equipment Hook shown in correct orientation for R&R Gate away from RPCM

EVA 3 P1 1A_A RPCM REMOVE/REPLACE (00:45) (Cont)

IV	EV2/EV3 (FF)	
2. IV record Failed RPCM s/n _____ (expect s/n C235300)	REMOVE FAILED RPCM On IV GO (inhibits complete), perform the following RPCM removal steps: 8. Verify failed P1 A_A RPCM is s/n C235300 9. Tether to failed RPCM tether point with gate pointed away from RPCM 10. PGT [**A6** 8.3 ft-lb, **CCW2** 30 RPM, MTL **30.5**]-6ext 7/16: Release RPCM drive screw, push slightly while turning, ~8 turns 11. √Status indicator – UNLOCK 12. Remove failed RPCM (slide off of rail) 13. Use scoop, as reqd 14. Stow failed RPCM in P1 A_A Crewlock Bag #2	NOTE Equipment Hook shown in correct orientation for R&R Gate away from RPCM
3. IV record Spare RPCM s/n _____ (expect C326597**)**	INSTALL RPCM 15. Inspect guide rail for debris/damage 16. Remove spare RPCM from P1 1A_A Crewlock Bag #2 (leave RET connected) 17. Report spare RPCM s/n (expect C326597) 18. Verify proper hook orientation on new RPCM (gate away from RPCM) 19. Install scoop, as reqd 20. Install RPCM on guide rail, and slide into soft dock 21. √Status indicator – not below UNLOCK	
4. IV record RPCM Drive Screw installation data: Turns= _____ Torque= _____ NOTE CETA lights may turn on after power-up	22. PGT [A2 3.8 ft-lb, CW2 30 RPM, MTL 30.5]-6ext 7/16: Fasten RPCM drive screw, push slightly while turning, 6-7 turns to hard stop 23. √Status indicator – LOCK 24. EV2 report torque and turns to IV 25. Stow PGT on swing arm	
5. If S0 1A_D RPCM R&R complete: On EV2 GO: Inform **MCC-H**, EV2 clear GO for DDCU S01A Converter power-up and RPCM checkout(s), as reqd	26. EV2 inform IV when clear of worksite. (DDCU S01A Converter power-up and RPCM checkout) 27. Retrieve P1 1A_A RPCM Crewlock Bag #2 Attach P1 1A_A Crewlock Bag #2 to BRT	

EVA 3 P1 1A_A RPCM REMOVE/REPLACE (00:45) (Cont)

IV	EV2/EV3 (FF)	
6. Receive glove check report from EV2	28. Inspect gloves/gauntlets. Report glove status to IV 29. Perform tool inventory 30. Translate to airlock Safety Tether temp stow location (S0 HR 3545) 31. Perform Safety Tether swap to airlock 85-ft Safety Tether: ❑ √Gate closed ❑ √Hook locked ❑ √Safety Tether Reel unlocked ❑ Remove 55-ft Safety Tether and stow on MWS 32. Perform CLEANUP	

EVA 3 P1 1A_A RPCM REMOVE/REPLACE – TASK DATA

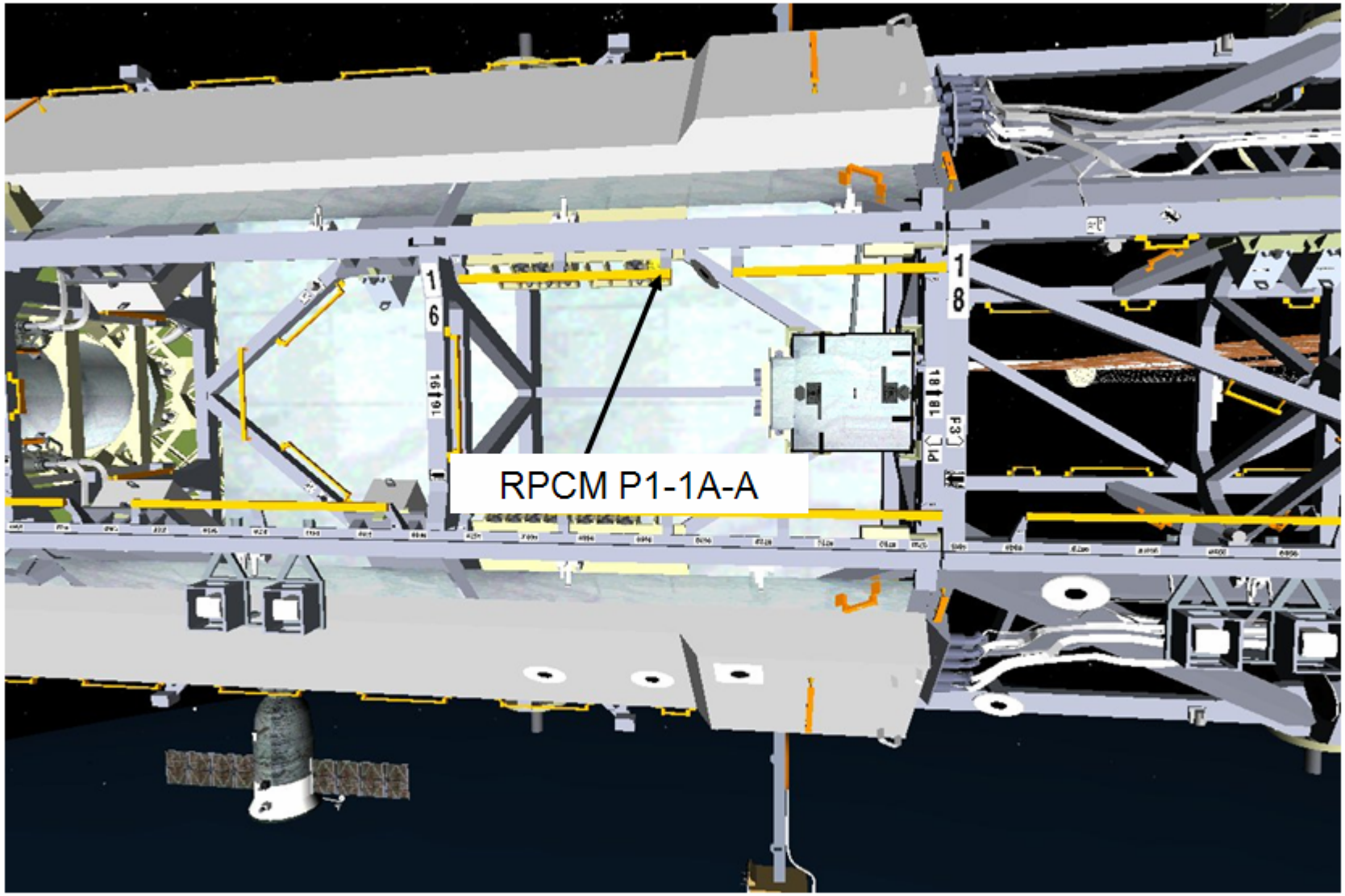

Table 1. Tools

EV2/EV3
PGT
7/16 (wobble) Socket-6 ext
Round scoop

Table 2. EVA Fasteners

Fastener Name	Label	Head Size	Qty	Install Torque (ft-lb)	Release Torque (ft-lb)	Failure Torque (ft-lb)	Turns	RPM
RPCM Drive Screw		7/16	1	5.5 (grnd) 3.8 (orbit)	4.5	18.6 (remove) 8.5 (install)	8 (remove) 6-7 (install)	30

* Fastener torque data is derived from INC-9 S0 RPCM R&R task.
It will be necessary to reverify data prior to performing this task.

Table 3. ORU Identification

	Part Number	Serial Number
Spare RPCM	R077419-61	C326597
Failed RPCM	R077419-61	C235300

RPCM Tether Orientation

EVA 3 CLEANUP (00:50)

IV	EV2 – Arnold (FF)	EV3 – Acaba (FF)
1. Inform EV2/EV3 to begin cold soak, as reqd	CLEANUP (00:50) 1. Retrieve LEE Lube Crewlock Bag #1 and attach to BRT (LEE Lube Crewlock Bag #1 near med ORU Bag) 2. Adjust TCV to begin cold soak, as reqd 3. Translate to Airlock	CLEANUP (00:25) 1. Open med ORU Bag and stow the following items: ❑ P1 1A_A RPCM Crewlock Bag #2 ❑ S0 1A_D RPCM Crewlock Bag #4 ❑ S1 Tasks Crewlock Bag #3 in the med ORU Bag 2. Close med ORU Bag and attach to BRT 3. Adjust TCV to begin cold soak, as reqd 4. Translate to Airlock 5. Stow med ORU Bag at airlock

EVA 3 A/L INGRESS (00:30)

IV	EV2 – Arnold (FF)	EV3 – Acaba (FF)
1. Perform prior to ingress: WVS PWRDN (PHOTO/TV, WVS CUE CARD)	INGRESS (00:30) 1. Transfer LEE Lube Crewlock Bag #1 to EV3 2. On EV3 GO: Attach right waist tether to EV3 Safety Tether hook 3. On EV3 GO: Release EV3 Safety Tether ❑❑ √Gate closed (both hooks) ❑❑ √Hook locked (both hooks) 4. Release EV2 Safety Tether 5. Perform final tool inventory 6. Ingress Airlock 7. Close thermal cover, attach Velcro strap 8. Remove SCU from stowage pouch 9. Remove DCM cover; Velcro to DCM 10. Connect SCU to DCM; √SCU locked 11. WATER – OFF (fwd) (expect H2O off msg)	INGRESS (00:30) 1. Open thermal cover 2. Ingress Airlock 3. Stow med ORU Bag in Airlock 4. Receive LEE Lube Crewlock Bag #1 from EV2 Stow Crewlock Bag in airlock 5. Attach right waist tether to airlock D-ring extender ❑ √Gate closed ❑ √Hook locked 6. Give EV2 GO to attach EV2 right waist tether to EV3 Safety Tether 7. Give EV2 GO to release EV3 Safety Tether 8. Perform final tool inventory 9. Remove SCU from stowage pouch 10. Remove DCM cover; Velcro to DCM 11. Connect SCU to DCM; √SCU locked 12. WATER – OFF (fwd) (expect H2O off msg)
	CAUTION Do not close hatch until WATER is OFF at least 2 min	
	When WATER – OFF for 2 min: 12. Verify hatch clear of hardware 13. EV handle – verify handle posn per hatch decal: Close and lock EV hatch 14. Go to PRE REPRESS portion of {CREWLOCK DEPRESS/REPRESS CUE CARD} (SODF: ISS EVA SYS: EVA PREP/POST)	13. Go to PRE REPRESS portion of {CREWLOCK DEPRESS/REPRESS CUE CARD} (SODF: ISS EVA SYS: EVA PREP/POST)

This Page Intentionally Blank

NOTES

NOTES

EVA 4 SUMMARY TIMELINE

PET HR : MIN	IV/SSRMS	15A EVA 4 EV1 – Swanson	EV2 – Arnold	PET HR : MIN
00:00		EVA 4 POST DEPRESS & EGRESS (00:25)	EVA 4 POST DEPRESS & EGRESS (00:25)	00:00
		JLP GPS ANTENNA B INSTALL (01:00)	S1/P1 RADIATOR IMAGING (01:30)	
01:00				01:00
		Z1 PATCH PANEL (00:30)		
02:00		S3 TASK SETUP (00:30)	S3 TASK SETUP (00:30)	02:00
		CP1 WETA INSTALL (00:40)	CP1 WETA INSTALL (00:40)	
03:00				03:00
		S3 OUTBOARD/NADIR PAS (01:15)	S3 OUTBOARD/NADIR PAS (01:15)	
04:00				04:00
		S3 INBOARD/ZENITH PAS (01:15)	S3 INBOARD/ZENITH PAS (01:15)	
05:00				05:00
		EVA 4 CLEANUP & INGRESS (00:40) • Cleanup (00:25) • • Ingress (00:15)	EVA 4 CLEANUP & INGRESS (00:40) • Cleanup (00:25) • • Ingress (00:15)	
06:00	EVA 4 PET = 06:20 hr			06:00
06:20		PRE-REPRESS (00:05)	PRE-REPRESS (00:05)	06:20

EVA 4 INHIBIT PAD

USOS (1)

ALL EVAs

PCU

NOTE

PCUs may require up to a 1-hr warmup period before they are operational

MCC-H 1. √PCUs (two) operational in discharge mode and one of the following:
   a. CCS PCU EVA hazard control FDIR enabled
   b. No more than two arrays unshunted and oriented < 105° from velocity vector

If one or both PCUs failed
2. No more than two arrays unshunted and oriented < 105° from velocity vector

LOCATION DEPENDENT INHIBITS

Mobile Transporter
MCC-H 1. √MT latched

Lab Window
{JLP GPS Ant}
IV When EV crew less than 10 ft from window or in window FOV, close window shutter

KU-Band (SGANT) Antenna
{On call, EV crew not expected to be in this area}
MCC-H If EV crew < 3.3 ft from KU-BAND antenna
1. Park KU-BAND:
   1.1 Pointing Mode – Inhibit
   1.2 PLC – Reset
   1.3 Autotrack Continuous Retry – Inhibit

USOS (2)

LOCATION DEPENDENT INHIBITS

S-Band (SASA) Antennas
{On call, EV crew not expected to be in this area}
MCC-H If EV crew < 3.6 ft from S1 SASA [P1 SASA]
1. P1 SASA (S1 SASA) – Active
2. S1 SASA [P1 SASA] – Powered down

SARJ
{S1/P1 Radiator Imagery & S3 PAS Deploys} (Stbd SARJ)
MCC-H When EV crew working within 2 ft or outboard of stbd SARJ, truss struts removed, or in APFR on PMA1
1. √DLA (1) – LOCKED
2. All motor setpoints set to zero
3. All motors deselected

{S1/P1 Radiator Imagery} (Port SARJ)
MCC-H When EV crew in APFR on PMA1
1. √DLA (1) – LOCKED
2. All motor setpoints set to zero
3. All motors deselected

TRRJ
{WETA & S3 PAS Deploys}
MCC-H When EV crew working or safety tether within 2 ft of S1 TRRJ rotation envelope
1. √DLA (1) – LOCKED at -115 to -60 or 60 to 115

SSPTS
{On call, EV crew not expected to be in this area}
MCC-H If EV crew working within 2 ft of SSPTS cables
1. RPCM LA1A4A D RPC 3 – Open, Close Cmd Inhibit
2. RPCM LA2A3B D RPC 1 – Open, Close Cmd Inhibit
3. RPCM Z14B A RPC 2 – Open, Close Cmd Inhibit
4. RPCM Z13B A RPC 2 – Open, Close Cmd Inhibit

EVA 4 INHIBIT PAD (Cont)

TASK SPECIFIC INHIBITS

Z1 Patch Panel
MCC-H 1. RPCM Z13B RPC 18 – Open, Close Cmd Inhibit
2. RPCM S02B D RPC 17 – Open, Close Cmd Inhibit

WETA Inhibits, to be performed prior to WETA installation:
MCC-H 1. RPCM S31A_A RPC 15 – Open, Close Cmd Inhibit
RPCM S31A_A RPC 16 – Open, Close Cmd Inhibit
2. RPCM S32B_A RPC 15 – Open, Close Cmd Inhibit
RPCM S32B_A RPC 16 – Open, Close Cmd Inhibit

Orbiter

ALL EVAs

TCS
L12 1. √TCS POWER – OFF

KU-BAND ANTENNA
MCC-H 1. √KU-BAND Mask – active
2. √KU-BAND EVA Protect Box – active

Ground

ALL EVAs

Ground Radar
MCC-H 1. √TOPO console, ground radar restrictions in place for EVA

COL

EuTEF
COL-CC Verify PLEGPay Power Status (ETF_PLEGPAY_ Pwr_Stat) – OFF

JEM

JEMRMS
{JLP GPS Ant}
SSIPC When EV crew working within vicinity of JEMRMS
1. RIP MA Brake – On
2. MDP Main Mode – Stby Mode
or
1. JEMRMS Rack – OFF

JPM PROX Antenna
{JLP GPS Ant}
SSIPC When EV crew working within 0.3 ft JPM PROX Antenna
1. √TRX Power – OFF
2. √TX Power – OFF
or
1. JPM PROX Antennas – OFF

JPM Windows
{JLP GPS Ant}
IV When EV crew translating on JPM port end cone, close window shutters

JLP GPS Antenna Install, to be performed prior to opening MLI
SSIPC 1. PDB A2 RPC4 – OPEN
2. PDB B1 RPC5 – OPEN

EVA 4 INHIBIT PAD (Cont)

RSOS (1)

ALL EVAs

SM Antennas

IV

1. GTS – Deactivate
2. ARISS (Ham Radio) – Deactivate or VHF (144-146 MHz) TX only

EVAs ON PMA1 OR RSOS (LOCATION DEPENDENT)

FGB Thrusters

MCC-M

1. √FGB MCS unpowered
2. √All FGB Attitude Control Thruster Valves (eighty) – closed
3. √FGB Attitude Control Manifold Valves – closed КШК1, КШК2, КШК4, КШК5, КШК9,ОКО3, ОКГ3, ОКО6, ОКГ6, ОКО7, ОКГ 7, ОКО8, ОКГ8

Soyuz Thrusters

MCC-M

1. √Soyuz manifolds (four) – closed ЭКО1, ЭКО2, ЭКГ1, ЭКГ2
2. √Soyuz MCS unpowered
3. √Soyuz Attitude Control Thruster Valves (fifty-two) – closed
4. √Soyuz Main Engine Valves (K1, K2, K3, K4, K5, K6) – closed

FGB Antennas

MCC-M

1. √FGB KURS P [КУРС P] – Deactivated

Soyuz Antennas

MCC-M

1. √Soyuz KURS A [КУРС A] – Deactivated

EVA 4 NOTES, CAUTIONS, AND WARNINGS

NOTES

1. Bolt install: Report torque and turns
2. Bolt release: Report torque and turns (if different from published range)
3. EVA connectors: After dis-connection and prior to connection; verify pin and EMI band integrity. Verify connector free of FOD
4. Inspect Fluid QDs for damage, prior to mating
5. Toolbox doors must be closed with one latch per door, when EV crew not in immediate vicinity
6. Avoid contact with OBSS striker bars (Vitrolube coating)

CAUTION

ISS Constraints

A. Avoid inadvertent contact with
1. Grapple fixture shafts (drylube)
2. PIP pins
3. EVA Crane [PMA1]
4. TCS Reflectors [PMA2,PMA3]
5. APAS hardware [PMA2,PMA3]
6. CETA Lights (Z-93 paint) [LAB,S1,Node 1]
7. Deployed MISSEs [Columbus EPF]
8. Passive UMAs
9. MBS/SSRMS/SPDM/JEMRMS taped radiative surfaces: VDU, ACU, JEU, LEU, MCU, CRPCMs, and Cameras
10. Deployed TUS cable [Nadir CETA rail]
11. S0 aft face Radiator
12. GPS Antennas (S13 paint) [S0,JLP]
13. UHF Antennas [LAB,P1]
14. ETCS Radiator flexhoses and panels [S1,P1]
15. EETCS/PV Radiator flexhoses, bellows and panels [P6,P4,S4,S6]
16. SASA RF Group [S1,P1]
17. Heat pipe radiators [Z1]
18. PCU cathode and HCA ports [Z1]
19. Ku-Band Antenna (SGANT) dish [Z1]
20. CMG cover/shells [Z1]
21. SPDM SJEU, EP, OTCM, LEU, and LEE VDU Radiator surfaces
22. Open CBM petal covers, LAB window shutter, and JPM window shutter
23. FPMU [S1]
24. OTSD
25. COL HAM radio antennas [COL-Nadir]
26. JTVE Cameras [JEM]
27. JEM A/L Target and Pins
28. S0/Node 2 Fluid Tray Hardlines at Node 2 end are limited to 25 lb

CAUTION (Cont)

ISS Constraints (Cont)

B. Electrical cables
1. Avoid bend radii < 10 times cable diameter

C. Fiber optic cables
1. Avoid bend radii < 10 times cable diameter
2. Avoid pulling on cable during mate/demate

D. Fluid line flex hoses and QDs
1. Avoid bend radii < 5 in for hoses with diameter < 1 in on LAB, S0, S1, P1, and 10-in for hoses with diameter < 1 in on all other elements
2. Avoid bend radii < 14 in for hoses with a diameter ≥ 1 in
3. Additional care should be taken to not exceed bend radii when applying loads at the flexible hose to rigid tube stub interfaces
4. Ensure fluid QD booties are fully closed prior to leaving worksite; wire tie if reqd

E. For structural reasons
1. Avoid vigorous body motions, quick grabs and kickoffs against tether restraints
2. Avoid performing shaking motions (sinusoidal functions) more than four cycles
3. Avoid kicking S1/P1 radiator beam
If any of these occur, wait 2 to 5 min to allow structural response to dissipate

EVA 4 NOTES, CAUTIONS, AND WARNINGS (Cont)

CAUTION (Cont)

ISS Constraints (Cont)

F. Other
1. ITT Cannon connector: On demated connectors, do not rotate collar or manipulate cable/connector using collar or connector tool
2. WIS Antennas: Do not use as handholds [Node 1,P6,Z1]
3. Lubricant from Ku-Band SGANT gimbals [Z1], CMGs [Z1], and RTAS Ground Strap fasteners [P6,P4,S4] can contaminate EMU
4. MLI handholds are not rated for crewmember translation loads
5. CBM petal covers may not be used as handholds unless both launch restraint pins are engaged
6. Prevent inadvertent contact of the tether shuttle with ETRS when the P3/S3 Tether Shuttle Stop is raised away from the rail

CAUTION (Cont)

Shuttle Constraints

A. Avoid inadvertent contact with
1. OBSS and SRMS Composite Sections, Joint Torque Arms, Grapple Fixture Shafts, and Cable Harnesses
2. LCS (silver Teflon) and LDRI (silver Teflon) and ITVC (gold foil) [OBSS]
3. WVS Antenna [ODS Truss & PLB Sill]
4. Payload Bay and Camera wire harnesses, cables, cable guides, and connectors

B. No touch
1. LDRI diffuser [OBSS]
2. OBSS saddle contacts (when OBSS unberthed) [OBSS]
3. Monkey fur [PLB]
4. Cameras: Metallic surfaces [PLB]
5. Ku-Band Antenna black dish and gold thermal blankets [PLB]

EVA 4 NOTES, CAUTIONS, AND WARNINGS (Cont)

WARNING

ISS Constraints

A. Avoid inadvertent contact with
1. Grapple fixture targets and target pins
2. SSU, ECU, beta gimbal platform, mast canister, SAW blanket boxes unless the beta gimbal is locked and the motor is turned off
3. Stay inboard of SARJ when active
4. Stay 2 ft from S1/P1 radiator beam rotational envelope when beam is free to rotate
5. Stay 5 ft from moving MT on face 1
6. SOLAR and EuTEF [COL EPF]

B. Handrails
1. Handrails previously used for MISSE attachment may not be used as a safety tether point [A/L endcone 564 & 566, A/L Tank 2 nad/fwd & port/fwd,P6 5389]

C. Pinch
1. NZGL connector linkage. Use caution when mating/locking
2. ITT Cannon Connector rotating housing
3. EV side of IV Hatch during Hatch operation (also snag hazard) [A/L]
4. LAB window shutter and CBM petal cover and JPM window shutter linkages during operation
5. JEMRMS HRM capture latches
6. JEM Cameras (JTVEs,EVE,WVE)
7. JEM EFBM capture latches

D. QDs
1. If QD is in FID when valve is opened (bail fwd), QD will leak and fluid line may whip
2. Do not rotate if in mated/valve open config

WARNING (Cont)

ISS Constraints (Cont)

E. RF radiation exposure
1. Stay 3.6 ft from S-Band (SASA) high gain Antenna when powered [S1,P1]
2. Stay 1.3 ft from S-Band (SASA) low gain Antenna when powered [S1,P1]
3. Stay 1 ft from UHF Antenna when powered [LAB,P1]
4. Stay 0.3 ft from fwd/aft JPM PROX antenna

F. Sharp Edges
1. Inner edges of WIF sockets
2. APFR active WIF probes
3. Mating surfaces of EVA connectors Avoid side loads during connector mating
4. Back side of MMOD shield fasteners
5. Spring loaded captive EVA fasteners (e.g., 6B-boxes, BMRRM, RTAS, SARJ Covers); the end of the spring may protrude
6. PMA umbilical launch restraints-exposed bolt threads
7. Adjustable Fuse Tether (Fish Stringer) buckles stowed in Node Bag
8. Nickel coated braided copper Ground Straps may contain frayed wires [P6,P4,S4,S6]
9. SPDM OTCM gripper jaws

WARNING (Cont)

ISS Constraints (Cont)

F. Sharp Edges (Cont)
10. Solar Array Blanket Box [P6,S6]
11. Keep hands away from SSRMS LEE/POA/SPDM LEE/JEMRMS EE opening, snares, and PDGF curvic coupling (teeth)
12. Fastener threads on back of Z1 U-jumper male FQD panel, if nutplate cap missing
13. Outboard MT rail attachment lug near P6 handrail 5333 and gap spanner
14. P2 connector on EWIS box TAA-06 [Zenith/Forward Corner 1 of P5 – SARJ at 0 deg]
15. Port/Aft portion of A/L circular HR [HR 0506]
16. Interior of JEMRMS HRMs
17. JEM A/L hatch corners

G. Thermal
1. EVA connectors with booties may become hot if left uncovered. Handling may need to be limited
2. PMA handrails may be hot. Handling may need to be limited
3. Turn off glove heaters when comfortable temp reached to prevent bladder damage. Do not pull fingers out of gloves when heaters are on
4. Uncovered trunnion pins may be hot
5. SSRMS/MBS/SPDM/JEMRMS/JTVE operating cameras and lights may radiate large amounts of heat

WARNING (Cont)

ISS Constraints (Cont)

G. Thermal (Cont)

6. Stay ≥ 1 ft away from PMAs and MMOD shields > 270 degF if EMU sun visor up; limit time to 15 min or less if > 300 degF
7. Stay at least 0.5 ft away from PMA and MMOD shields > 325 degF
8. Do not touch EMU protective visor if temp has been < -134 degF for > 15 min
9. No EMU TMG contact with PMAs and MMOD shields > 320 degF
10. No EMU boot contact with foot restraint when temp < -120 degF or > 200 degF
11. Columbus end cones may violate touch temperature constraints when $-75 \leq \beta \leq -60$ or $60 \leq \beta \leq 75$
12. PDGF surfaces may not meet touch temperature requirements for unlimited contact when $\beta \leq -70$ or $\beta \geq 70$
13. JPM port end cones and JLP port nadir may violate touch temperature constraints when $\beta > 60$ deg

WARNING (Cont)

ISS Constraints (Cont)

H. Electrical Shock

1. Stay ≥ 2 ft from ungrounded floating connectors if not unpowered
   - SSPTS connectors include NOD1 Stbd/Fwd HR 0130, Lab Stbd/Fwd HR 0273, PMA2 Stbd and Port
   - MBS Cross-Connect jumpers (translate past these using UMA handrails) Include S0 EVA Power Cables (inside S0 Bay 00 Face 4, Bay 01 Face 3) ESP2 jumper (inside S0 Bay 03 Face 4)
2. Do not touch SPDM CLPA 1 electrical connector prior to camera installation

WARNING (Cont)

Shuttle Constraints

A. Arcing/Molten Debris

1. Stay ≥ 2 ft from exposed EFGF connector when OBSS berthed, powered, and EFGF not grappled [PLB]
2. Stay ≥ 2 ft from exposed Stbd Fwd MPM contacts [PLB]
3. Stay above PLB sill when within 1 ft of powered ROEU connector [PLB]

B. Pinch

1. PRLA operation [PLB]

C. RF radiation exposure

1. Stay 3.28 ft from S-Band Antenna when powered
2. Stay 1 ft from top and side of UHF PLB Antenna radome surface when in high powered mode [ODS truss]
3. Stay 0.33 ft from top and side of UHF PLB Antenna radome surface when in low powered mode [ODS truss]
4. Remain below the level of the PLB door mold line for first 20 in Aft of Fwd bulkhead when S-Band Antenna powered [PLB]
5. Remain on the inboard side of the Stbd slidewire (sill handrails if slidewire not installed) for first 20 ft Aft of Fwd bulkhead when Ku-Band Antenna powered [PLB]

WARNING (Cont)

Shuttle Constraints (Cont)

D. Sharp Edges
1. PRLA grounding wipers [PLB]
2. LDRI baffles (also an entrapment hazard) [OBSS]
3. Keep hands away from SRMS EE opening and snares
4. TCS connector backshells have exposed threads [ODS]

E. Thermal
1. Illuminated PLB lights; do not touch
2. OBSS grapple fixture shafts/cams may be hot. Limit handling if required
3. Stay 27 ft from PRCS when powered
4. Stay 3 ft from VRCS when powered
5. Stay 3 ft from APU when operating

F. Contamination
1. Stay out of the immediate vicinity of leaking jet or APU

G. Lasers
1. Do not look at LDRI diffuser or LCS laser aperture window

EVA 4 TOOL CONFIG

EV1

EMU D-rings
- ❑❑ Ext on left side
- ❑❑ Ext on right side
- ❑❑ Waist Tether [right D-ring extender]
- ❑❑ 85-ft Safety Tether [right D-ring extender]
- ❑❑ 85-ft Safety Tether [MWS]

MWS
- ❑❑ Small Trash Bag
  - ❑■ Adj tether s/n _____
- ❑❑ 2 – Wire ties as tether loops
- ❑❑ RET (w/PIP pin)
- ❑❑ RET (sm-sm)
- ❑❑ Adj Tether
- ■❑ RET (sm-sm) (WETA MLI)

- ❑❑ Swing Arm (right side)
  - ❑❑ PGT w/6-in ext s/n _____
    - ❑❑ RET (sm-sm)

- ❑❑ BRT (left side)
  - ❑❑ RET (sm-sm)
  - ❑❑ 2 – Wire ties

❑❑ SAFER

NOTE: Prior to use, inspect the following hardware:
- ❑ RET cords for fraying
- ❑ Safety Tether & Waist Tether load alleviating straps: No red visible
- ❑ Sm Trash Bag: Bristle deformation/damage, after stowing tools in trash bag

Use Blue RETs Only

Tether Count:	(used)	(total) ISS qty
RET (sm-sm)	11	16
RET (w/PIP pin)	2	5
RET (Lg-sm)	4	8
Adj Tethers (sm-sm)	7	10
Adj Tethers (Lg-sm)	0	2
D-ring Extenders	5	6

EV2

EMU D-rings
- ❑❑ Ext on left side
- ❑❑ Ext on right side
- ❑❑ Waist Tether [right D-ring extender]
- ❑❑ 85-ft Safety Tether [right D-ring extender]

MWS
- ❑❑ Small Trash Bag [left inside]
  - ❑❑ Adj tether
    - ❑❑ Gap Spanner, 72-in
      - ❑❑ Adj tether
- ❑❑ Small Trash Bag [right inside]
- ❑❑ 2 – Wire ties as tether loops
- ❑❑ RET (w/PIP pin)
- ❑❑ RET (sm-sm)

- ❑❑ Swing Arm (right side)
  - ■❑ PGT w/6-in ext s/n _____
  - ❑■ EVA Camera w/bracket & 50mm lens
    - ❑❑ RET (sm-sm)

- ❑❑ BRT (left side)
  - ❑❑ RET (sm-sm)
  - ❑❑ 2 – Wire ties

❑❑ SAFER

CREWLOCK
- ❑❑ RET (Lg-sm)
  - ❑❑ IR Camera w/EHIP Bat

NOTE

Prior to egress, turn IR camera Master Switch ON. Wait until LED on back of camera is solid green (~45 sec). Hold enable switch UP for 5 sec, verify LED – OFF. Cover Master Switch with Kapton Tape.

Remove IVA covers from JLP GPS Antenna and WETA shown in section 18

Bag Color Key: 119 EVA Tools, Staging, Crewlock MWS

CREWLOCK (Cont)
- ❑❑ Tether Ext on A/L D-ring

- ❑❑ RET (Lg-sm)
  - ❑❑ Med ORU Bag
    - ❑❑ Adj Tether (outside – tie down)
    - ❑❑ Adj Tether (outside – tie down)
    - ❑❑ 55-ft Safety Tether
    - ❑❑ RET (sm-sm) (to inside tether point)
      - ❑❑ Round Scoop
        - ❑■ JLP GPS Antenna B
    - ❑❑ Fish Stringer
      - ■❑ 2 – Connector Caps (GPS Ant)
      - ■❑ 2 – Connector Caps (JLP)
      - ■❑ MLI (JLP GPS)
      - ■❑ Long Wiretie

- ❑❑ RET (Lg-sm)
  - ❑❑ Crewlock bag #3
    - ❑❑ Adj Tether (outside – tie down)
    - ■❑ Dummy Box (WETA) (Int RET #1)
    - ■❑ Round Scoop (WETA) (Int RET #2)
    - ❑❑ Adj Tether (Int RET #3)
      - ■❑ MLI (WETA)
    - ❑❑ EVA Camera w/bracket & 28mm lens
      - ❑❑ RET (sm-sm)

- ❑❑ RET (Lg-sm) on Scoop
  - ❑■ WETA (with MLI)
    - ❑■ RET (sm-sm) on opposite tether point (right side when looking at Scoop)
    - ❑■ Round Scoop

- ❑❑ RET (sm-sm) (On UIA D-ring)
  - ❑■ PGT w/6-in ext
  - ■❑ EVA Camera w/bracket & 50mm lens

- ❑❑ RET (sm-sm) (On UIA D-ring)
  - ❑❑ BRS Pin Tool w/Sheath

EVA 4 TOOL CONFIG (Cont)

CREWLOCK (Cont)

Staging Bag
- ❑❑ Fish Stringer #1
  - ❑❑ Wire Tie Caddy (hook #1)
    - ❑❑ 9 wire ties
  - ❑❑ Velcro/Tape Caddy (hook #2)
  - ❑❑ PGT (hook #3) s/n _____
    - ❑❑ PGT Battery s/n _____
    - ❑❑ 7/16-in (wobble) Socket – 6 ext
  - ❑❑ Vise Grips (hook #4)
  - ❑❑ Ratchet Wrench (hook #5)
    - ❑❑ 7/16-in (rigid) Socket – 9 ext
  - ❑❑ Cheater Bar (hook #6)
  - ❑❑ EVA Hammer (hook #7)
  - ❑❑ 55-ft Safety Tether (to strap)

- ❑❑ Fish Stringer #2
  - ❑❑ Connector Cleaner Tool Kit (Hook #1)
  - ❑❑ Pin Straightener Tool (Hook #2)
  - ❑❑ Probe (Hook #3)
  - ❑❑ Prybar (Hook #4)
  - ❑❑ Needle Nose Pliers (Hook #5)
  - ❑❑ Torque Wrench w/bag (set to 31) (Hook #6)
  - ❑❑ Right Angle Drive (Hook #7)
  - ❑❑ Long-Duration Tie-Down Tether (to strap)
  - ❑❑ Long-Duration Tie-Down Tether (to strap)
  - ❑❑ MWS Key Strap Assy (on Wire Tie to strap)

- ❑❑ RET (Lg-sm)
  - ❑❑ Sm ORU Bag
    - ❑❑ Fish Stringer #3
      - ❑❑ Cnctr Insulating Sleeve Size 21/25 (Hook #1)
      - ❑❑ Cnctr Insulating Sleeve Size 21/25 (Hook #2)
      - ❑❑ Cnctr Insulating Sleeve Size 21/25 (Hook #3)
      - ❑❑ Cnctr Insulating Sleeve Size 21/25 (Hook #4)
      - ❑❑ Cnctr Insulating Sleeve Size 33/37 (Hook #5)
      - ❑❑ Cnctr Insulating Sleeve Size 33/37 (Hook #6)

CREWLOCK (Cont)

IV Bag
- ❑❑ 2 – Towel
- ❑❑ Contamination Detection Kit
- ❑❑ 2 – GP Caddy
  - ❑❑ Thermal Mittens (1 pair)
- ❑❑ RET (sm-sm) (Black)
  - ❑❑ Socket Caddy
  - ❑❑ 1/2-in (wobble) Socket – 8 ext
  - ❑❑ 7/16-in (wobble) Socket – 6 ext
- ❑❑ 2 – DCM Plug (SAFER Hardmount)
- ❑❑ 2 – RET (sm-sm, black)

❑ JLP GPS Antenna
- Potential sharp edge exists on underside of GPS Antenna bracket
- The plate nut retainers have sharp edges that have been taped over with Glass Tape P213 (BETA Cloth Tape)

❑ Review PGT ops
- Report "green light" (for torque down ops)
- Report torque and turns
- Expect LOTORQ fault msg, Fault LED and Red LED for bolt release ops

EQUIPMENT LOCK

Crewlock Bag #1
- ❑ Empty

Crewlock Bag #2
- ❑ Failed RPCM (Int RET #1)

Crewlock Bag #4
- ❑ Failed RPCM (Int RET #1)

Mesh Bag #1 (119 EVA Tools)
- ❑ Ziplock w/Grease Gun Caps

Mesh Bag #2 (Done Tools)
- ❑ 5/8-7.8-in extension
- ❑ 5/8-7.8-in extension
- ❑ Round TM w/5/8-in Prd Socket
- ❑ Socket Caddy
- ❑ Torque Wrench bag
- ❑ Cannon Connector Tool
- ❑ Cannon Connector Tool
- ❑ Ratchet Wrench
  - ❑ 7/16-2-in rigid ext
- ❑ Cnctr Insulating Sleeve Size 33/37
- ❑ SPDM EP1 Cover
- ❑ RCC Gap Gauge
- ❑ WIF Adapter
- ❑ Ziplock w/used EVA Wipes (4) & Wire Ties
- ❑ Ziplock w/Grease Gun, Wipe, & Wire Tie
- ❑ 7/16-18-in ext

Mesh Bag #3 (Transfer to Shuttle)
- ❑ Locking Strut Aid
- ❑ Locking Strut Aid
- ❑ Locking Strut Aid
- ❑ Locking Strut Aid
- ❑ Torque Wrench (s/n 1007)

Bag Color Key: 119 EVA Tools, Staging, Crewlock MWS

EVA 4 A/L EGRESS (00:20)

IV	EV1 – Swanson (FF)	EV2 – Arnold (FF)
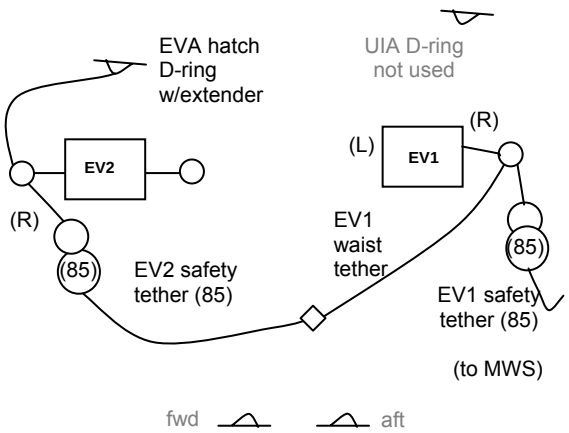 2 – 85-ft A/L tether – EV1 1 – 85-ft A/L tether – EV2 > EMU 1 – 55-ft tether – EV1 Med ORU Bag NOTE Sunrise/Sunset checks • √Helmet lts, visor, as reqd • √Gloves • √Tool, MWS tethers • √MWS, BRT latches IR Camera Warmup start: _____	INITIAL CONFIG Verify: ❑ EV1 right waist tether connected to EV2's 85-ft safety tether ❑❑ √Gate closed (both hooks) ❑❑ √Hook locked (both hooks) EGRESS 1. Open hatch thermal cover 2. Egress crewlock 3. Attach EV1 safety tether to fwd A/L D-ring ❑ √Gate closed ❑ √Hook locked ❑ √Reel unlocked 4. Fairlead safety tether as reqd 5. Attach EV2s safety tether anchor end to aft A/L D-ring ❑ √Gate closed ❑ √Hook locked ❑ Release EV1 waist tether 6. Give EV2 GO to release waist tether 7. Receive Med ORU bag and place on BRT 8. As EV2 egresses monitor IR camera clearance	INITIAL CONFIG Verify: ❑ EV2 right waist tether connected to Airlock D-ring extender ❑ √Gate closed ❑ √Hook locked ❑ √Reel unlocked EGRESS 1. On EV1 GO, release waist tether from A/L D-ring 2. Hand Med ORU bag to EV1, Leave RET on A/L D-ring ext NOTE IR Camera requires 5-min warm up after power up and prior to use 3. √sw MASTER – ON, √LED – OFF 4. Press and release ENABLE switch to initiate camera warmup (IV start 5-min timer), √LED – ON 5. Place IR camera on BRT 6. Egress crewlock

EVA 4 A/L EGRESS (00:20) (Cont)

IV	EV1 – Swanson (FF)	EV2 – Arnold (FF)
1. Post crew egress: WVS Software: Select page – RF Camera sel 'Advanced controls' S-Band level (two) – max (Required after A/L egress)	9. Verify EV2 SAFER Configuration: ❑ √R Handle down (HCM door – Closed) ❑ √L Handle down (MAN ISO Valve – Open) 10. Translate to JEM HR 1111 for tether swap	7. Verify EV1 SAFER Configuration: ❑ √R Handle down (HCM door – Closed) ❑ √L Handle down (MAN ISO Valve – Open) 8. Close hatch thermal cover 9. Translate to PMA1 WIF 2

EVA 4 S1/P1 RADIATOR IMAGING (01:30)

IV

Radiator Side	IR	Digital
S1 RBVM		
S1 Non-RBVM		
P1 RBVM		
P1 Non-RBVM		

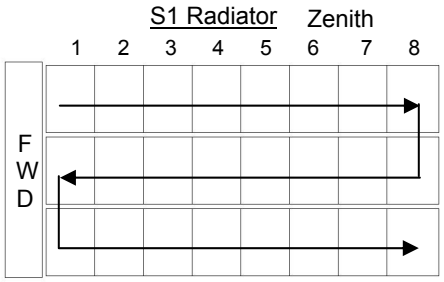

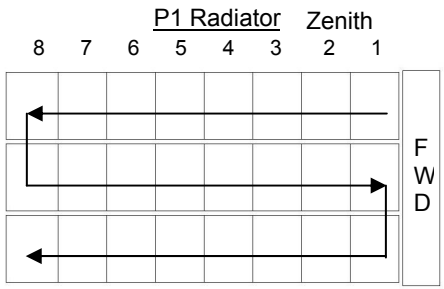

Panel numbers and movie sequence
(pause 2-3 sec on each panel)

1. Give **MCC-H** GO for TRRJ rotation

EV2 – Arnold (FF)

NOTE
IR Camera is set to auto stop a movie after 150 frames (75 sec).

Each row of 8 panels should be roughly 50 frames

1. RET to APFR in PMA1 WIF2
2. Reconfigure **APFR [6,KK,F,6]** for S1 or **[6,KK,F,12]** for P1
   ❑ √Blk-Blk pull/twist test
3. Ingress APFR; use Tool Stanchion as reqd (yaw handle)

4. Lower MWS and position IR camera with BRT as reqd
5. Remove camera lens cover
6. ❑ ❑ ❑ ❑ Set camera focus on middle radiator panels 4 and 5 using arrow keys (can be done during warm up):
   a. Right arrow Course Focus (+)
   b. Left arrow Course Focus (-)
   c. Up arrow Fine Focus (+)
   d. Down arrow Fine Focus (-)

7. Verify with IV 5-min camera warmup complete

8. ❑ ❑ ❑ ❑ Perform Flat Field correction (Press and release F|A button)

9. ❑ ❑ ❑ ❑ Record 150-frame/75 sec movie of radiator:
   a. Press and release the S|T button to start the movie
   b. Start with zenith radiator panels 1-8, then middle radiator panels 8-1, and finally nadir radiator panels 1-8
   c. Pause for 2-3 sec centered on each radiator panel
   d. The movie will auto stop after 150 frames, or if complete with all panels prior to 150 frames press and release the S|T button to stop the movie
10. ❑ ❑ ❑ ❑ Transfer movie to flash card. (Press and hold S|T button for 3 sec. Expect 75 sec to complete the transfer)

11. Close lens cover

12. ❑ ❑ ❑ ❑ If daylight present, map radiators with EVA camera (15-20 photos per radiator set). (Take digital photos of radiator damage during rotation)
13. Give IV GO for TRRJ rotation

14. Repeat steps 5-13 for both sides of S1 and P1 radiators; yaw **APFR [6,KK,F,6]** for S1 or **[6,KK,F,12]** for P1 and Tool Stanchion as reqd

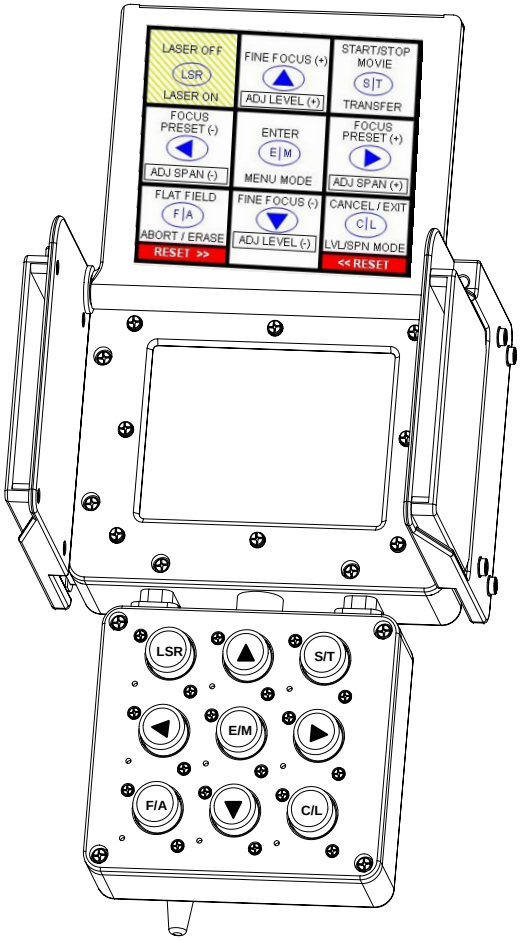

NOTE
Press and release for top function.
Press and hold ~3 sec for bottom function

EVA 4 S1/P1 RADIATOR IMAGING (01:30) (Cont)

IV	EV2 – Arnold (FF)	
2. Inform **MCC-H** EV crew ready for Port SARJ rotation	When complete with all IR imagery of both S1 and P1 radiators: 15. Press and hold ENABLE switch for 5 sec to put IR Camera in Standby mode (display reads 'Shutting down…' and LED-OFF) 16. Close lens cover and LCD cover 17. Adjust BRT and MWS as reqd 18. Configure **APFR [12,KK,F,6]** (Original Settings) ❑ √Blk-Blk pull/twist test 19. Check gloves 20. Inform IV when ready for Port SARJ rotation (after APFR Egress) 21. Translate to A/L	

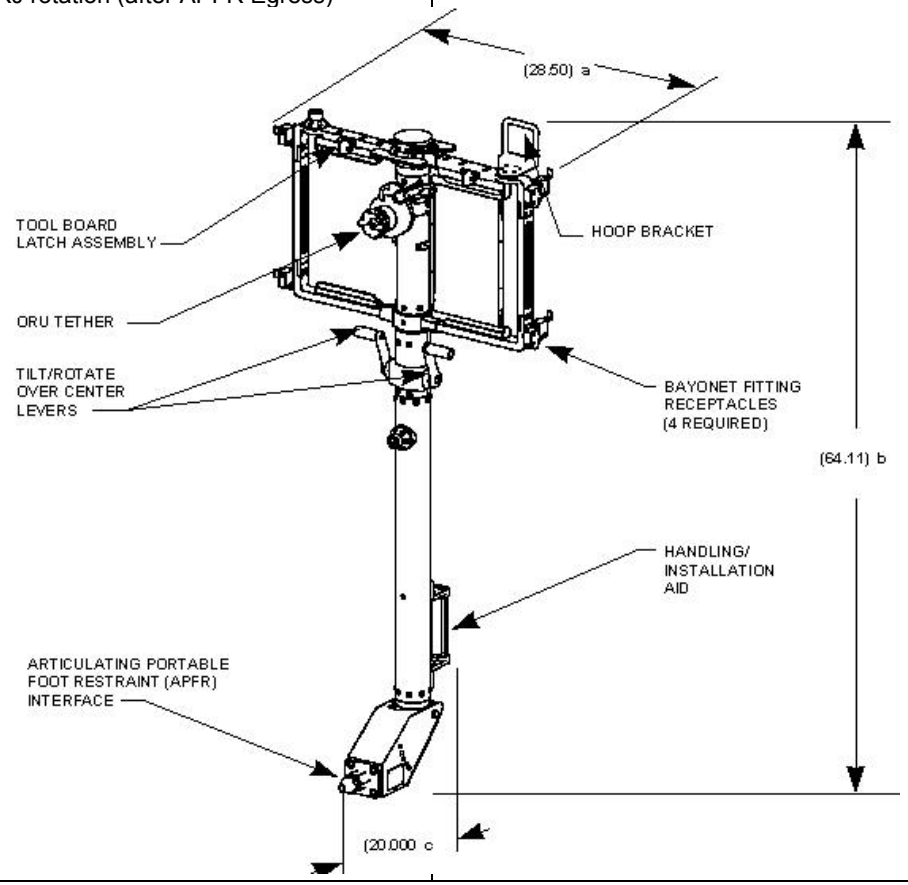

EVA 4 JLP GPS ANTENNA INSTALL (01:00)

IV	EV1 – Swanson (FF)
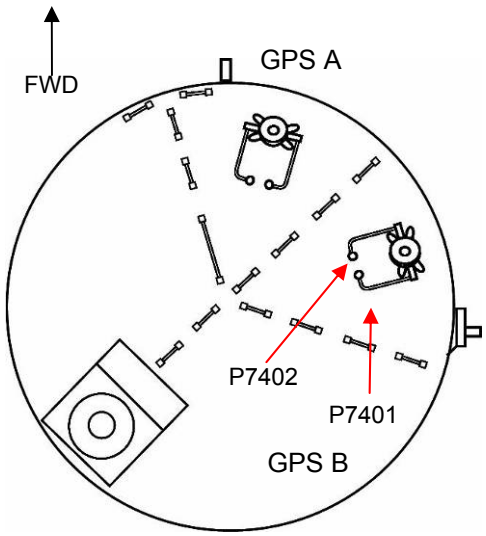	SETUP 1. Perform safety tether swap to 85-ft safety tether at JEM HR 1111 ❑ √Gate closed ❑ √Hook locked ❑ √Reel unlocked 2. Stow A/L safety tether on JEM HR 1111 ❑ √Reel unlocked CAUTION Avoid inadvertent contact with JEM airlock target and pins WARNING Avoid inadvertent contact with JEM cameras and booms (Thermal & Pinch) JEM airlock hatch corners may be sharp Interior of JEMRMS HRMs may be sharp JEM EFBM capture latches are potential pinch points 3. Translate to JEM port end cone 4. Fairlead safety tether around JEM camera and boom 5. If 55-ft safety tether used, perform safety tether swap to 55-ft safety tether at JLP HR _____, if reqd ❑ √Gate closed ❑ √Hook locked ❑ √Reel unlocked 6. If 55-ft safety tether used, stow 85-ft safety tether on JLP HR _____, if reqd ❑ √Reel unlocked 7. Look for JLP HR 1227 or HR 1228 and head zenith 8. Fairlead Safety Tether out to center of JLP GPS ANTENNA INSTALL 9. Stow Med ORU Bag with Adj tethers on JLP HR 1271 & 1272 with the lid on 1275 & 1276 10. Stow Fish Stringer between ORU bag and JLP HR 1274 11. Check gloves CAUTION Avoid inadvertent contact with GPS Antenna (paint) 12. BRT to JLP HR 1270 and attach MWS EE to 1274 13. Remove MLI cover for GPS Antenna B (stbd); stow on Fish Stringer 14. Install GPS Antenna B onto dovetail; perform pull test 15. Remove round scoop and stow in ORU bag

EVA 4 JLP GPS ANTENNA INSTALL (01:00) (Cont)

IV	EV1 – Swanson (FF)
1. Verify with **MCC-H** JEM PROX GPS Antennas Inhibit Pad complete <u>Med ORU Bag Inventory</u> ❑ (2) – Adj Tethers ❑ RET (sm-sm) ❑ Round Scoop ❑ 55-ft Safety Tether ❑ Fish Stringer ❑ (2) – Connector Caps (GPS Ant) ❑ (2) – Connector Caps (JLP) ❑ MLI (JLP GPS) ❑ Long Wiretie 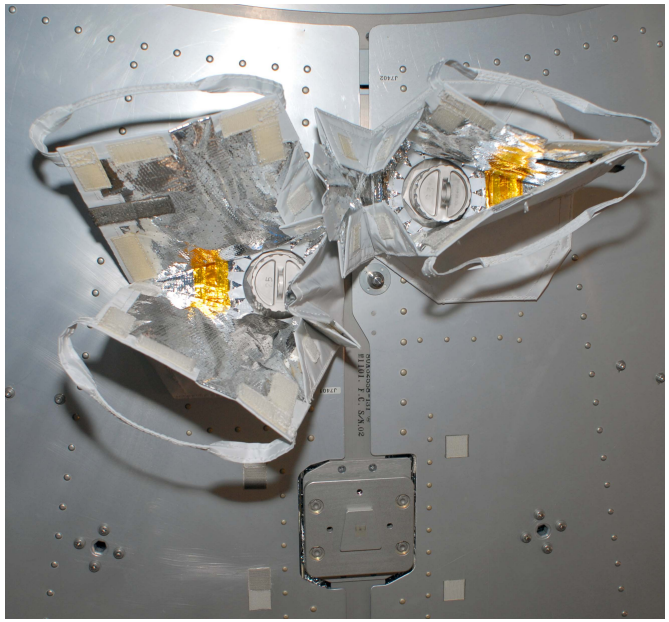	16. On IV GO: Open GPS Antenna connector MLI covers on JLP 17. Remove dust caps (2) from JLP and stow on Fish Stringer <u>NOTE</u> √No FOD, No bent pins, Good EMI band 18. Remove P7401 dust cap from cable; stow on Fish Stringer (wire tie is connected to a cap) 19. Inspect and Mate connectors: ☐ P7401→|←J7401 (aft) 20. Reattach MLI covers to P7401 grounding Velcro; black on black (cable to cover) 21. Remove P7402 dust cap from cable; stow on Fish Stringer (wire tie is connected to a cap) 22. Inspect and Mate connectors: ☐ P7402→|←J7402 (fwd) 23. Reattach MLI covers to P7402 grounding Velcro; black on black (cable to cover) 24. WVS Survey of GPS Antenna B 25. Give **MCC-H** GO to checkout GPS Antenna 26. Perform tool inventory 27. Stow Fish Stringer in Med ORU Bag 28. Place Med ORU Bag on BRT 29. If 55-ft safety tether used, perform safety tether swap to 85-ft safety tether at JLP HR _____, if reqd ❑ √Gate closed ❑ √Hook locked ❑ √Reel unlocked 30. If 55-ft safety tether used, stow 55-ft tether on Med ORU Bag, if reqd 31. Translate to JEM HR 1111 32. Perform safety tether swap to A/L safety tether at JEM HR 1111 ❑ √Gate closed ❑ √Hook locked ❑ √Reel unlocked 33. Stow 85-ft tether on MWS 34. Translate to A/L 35. Open A/L thermal cover 36. Stow spare 85-ft Safety Tether on Med ORU bag 37. Stow Med ORU bag in A/L 38. Retrieve BRS Pin Tool 39. Close A/L thermal cover

EVA 4 Z1 PATCH PANEL (00:30)

IV	EV1 – Swanson (FF)
1. √**MCC-H**: Patch panel inhibits in place: √RPCM Z13B RPC 18 – Open, close cmd inh √RPCM S02B D RPC 17 – Open, close cmd inh 2. Give EV GO for patch panel reconfig APFR Setting if reqd: Z1 WIF 04 [10,PP,B,12] Contingency Tool if reqd: Compound Cutters – Port A/L Toolbox Slot 1 behind Zenith door	1. Verify EV1 SAFER Configuration: ❑ √R Handle down (HCM door – Closed) ❑ √L Handle down (MAN ISO Valve – Open) 2. Check gloves 3. Translate to Z1 Patch Panel CAUTION Avoid inadvertent contact with heat pipe radiators NOTE √No FOD, No bent pins, Good EMI band 4. On IV GO on Front Panel: ❑ Attempt to demate P2 from J4 ❑ Remove dust cap from J2 5. If able to demate connector P2 from J4 on Front Panel: ❑ Place dust cap on J4 ❑ Inspect and Mate P2 to J2 6. If NO joy with connector P2: ❑ Ensure bail on P2 is fully aft and dust cap is off ❑ Move to Back Panel ❑ Demate connector J2 from Upper Right receptacle ❑ Demate connector J4 from Upper Middle receptacle NOTE Connectors J2 and J4 are restrained by tie-wrap and may prevent mating of connectors. Tie-wrap may be cut if required ❑ Inspect and Mate J2 to Upper Middle receptacle (Back Panel) ❑ Inspect and Mate J4 to Upper Right receptacle (Back Panel) ❑ Push bail of P2 fwd to mate connector (Front Panel) ❑ Install dust cap on J2 (Front Panel) 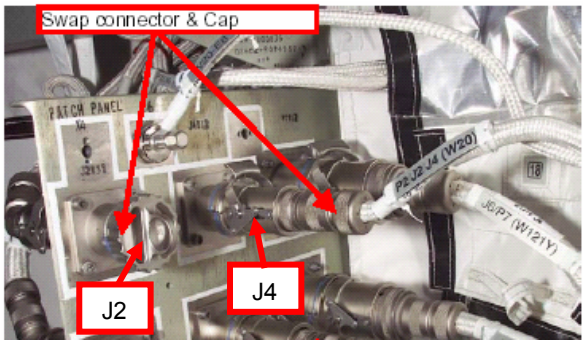 CMG Patch Panel Front Side 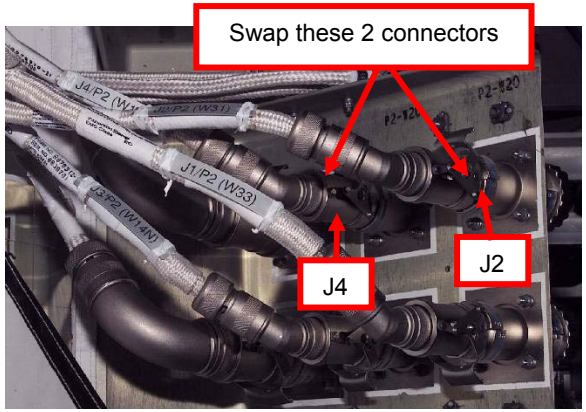 CMG Patch Panel Back Side 7. Give GO to **MCC-H** for patch panel power up 8. Open Stbd door of Port toolbox and stow Adj tether from trash bag on tool panel; close and lock toolbox door 9. Check gloves 10. Translate to A/L

EVA 4 S3 TASK SETUP (00:30)

IV	EV1 – Swanson (FF)	EV2 – Arnold (FF)
	SETUP 1. Receive C/L bag from EV2 and place on BRT 2. Hand BRS Pin Tool to EV2 3. Receive WETA and temp stow aft on A/L HR with RET (Lg-sm) 4. Reconfig safety tethers ❑ On EV2 GO: Connect EV1 waist tether to EV2 safety tether (while EV2 safety tether anchor remains on HR) ❑ On EV2 GO: Release EV2 safety tether A/L aft D-ring ❑ ❑ √Gate closed (both hooks) ❑ ❑ √Hook locked (both hooks) ❑ Release EV1 safety tether from A/L fwd D-ring	SETUP 1. Open hatch thermal cover 2. Stow IR Camera in A/L 3. Stow EVA camera in A/L 4. Hand C/L bag to EV1 5. Receive BRS Pin Tool and stow in A/L 6. RET to WETA 7. Hand WETA to EV1 (A/L RET stays with WETA) 8. Attach waist tether to A/L D-ring ext ❑ √Gate closed ❑ √Hook locked ❑ Give EV1 GO to attach Waist Tether to EV2 safety tether ❑ Give EV1 GO to release EV2 safety tether 9. Retrieve PGT and place on Swing Arm 10. Retrieve WETA and attach to BRT 11. Attach RET (Lg-sm) from WETA on A/L D-ring ext
	WARNING 2-ft Keep-Out Zone for floating cables between MT and MBS. Stay on UMA handrails during translation underneath MT	
1. Verify with **MCC-H** S1 TRRJ and S3/S4 SARJ locked	5. On IV GO: Translate to S1 HR 3214 6. Set safety tether anchor (for both EV1/2): ❑ Attach EV1 safety tether anchor to S1 HR (3214) ❑ √Gate closed ❑ √Hook locked ❑ √Reel unlocked ❑ Attach EV2 safety tether anchor to S1 HR (3215) ❑ √Gate closed ❑ √Hook locked 7. Release EV1 waist tether from EV2 safety tether 8. Give EV2 GO to release EV2 waist tether from A/L D-ring 9. Translate to S3 aft side	12. Verify EV2 SAFER Configuration: ❑ √R Handle down (HCM door – Closed) ❑ √L Handle down (MAN ISO Valve – Open) 13. ❑ √Reel unlocked 14. On EV1 GO, release Waist Tether from A/L D-ring 15. Close hatch thermal cover 16. Translate to S3 fwd side

EVA 4 CP1 WETA INSTALL (00:40)

IV	EV1 – Swanson (FF)	EV2 – Arnold (FF)
	NOTE Either crewmember may perform SETUP 1. Check gloves 2. Temp stow C/L Bag on S3 Face 4 at HR 3029 and HR 3020 3. Temp stow camera w/RET at HR 3029 DUMMY BOX REMOVAL 4. Tether to dummy box with C/L bag RET 5. **PGT [A5** 7.0 ft-lb, **CCW2**, 30.5**]**-7/16-6-in ext ❑❑ Release dummy box left and right captive fasteners 7-12 turns (bolt will pop up) 6. **PGT[A5** 7.0 ft-lb, **CCW2**, 30.5**]**-7/16-6-in ext ❑ Release center jack screw 24-30 turns 7. Remove dummy box 8. Hand dummy box to EV2	NOTE Either crewmember may perform SETUP 1. Check gloves DUMMY BOX REMOVAL 2. Assist EV1 as required 3. Receive dummy box from EV1 and stow in C/L bag
	NOTE √No FOD, No bent pins, Good EMI band	
1. ❑√**MCC-H** WETA inhibits in place: RPCM S31A_A RPC 15 – Open, Close Cmd Inh RPCM S31A_A RPC 16 – Open, Close Cmd Inh RPCM S32B_A RPC 15 – Open, Close Cmd Inh RPCM S32B_A RPC 16 – Open, Close Cmd Inh **Torque** / **Turns** **WETA** (Center)	WETA INSTALL 9. Set **PGT [A7** 9.2 ft-lb, **CW2**, 30.5**]**-7/16-6-in ext For WETA center jack bolt 10. Receive WETA from EV2 11. Install WETA on the stanchion by sliding it along two guide pins into soft dock position 12. RET to and Remove round scoop; stow on MWS or pass to EV2 for C/L bag stowage 13. Push in and engage WETA center jack bolt to hardstop ~24-30 turns ← Report torque and turns 14. Visually check for contact between WETA front wedge and support structure 15. Release TA clamps 16. Demate W8200 cable connectors P2, P3 and P4 from dummy panel A296 ❑ P2 from J2 ❑ P3 from J3 ❑ P4 from J4	WETA INSTALL 4. Pass WETA to EV1 5. On IV GO: Demate deadface connectors and connector cap from panel A78 J2, J3 and J4; temp stow ❑ J2 ❑ J3 ❑ J4 6. Inspect and Mate W8200 cable connectors to S3 panel A78 receptacles (any order) ❑ P2 to J2 ❑ P3 to J3 ❑ P4 to J4

EVA 4 CP1 WETA INSTALL (00:40) (Cont)

<table>
<tr><th>IV</th><th>EV1 – Swanson (FF)</th><th>EV2 – Arnold (FF)</th></tr>
<tr>
<td>
<table>
<tr><th></th><th>Torque</th><th>Turns</th></tr>
<tr><td>WETA (Outer – Left/stbd)</td><td></td><td></td></tr>
<tr><td>WETA (Outer – Right/port)</td><td></td><td></td></tr>
</table>
2. Give MCC-H GO to power up WETA
</td>
<td>
17. Inspect and Mate deadface connectors (J2 & J3) and twist cap (J4) to A296 dummy panel
❑ P2 NZGL Cap (size 15) to J2
❑ P3 NZGL Cap (size 13) to J3
❑ P4 Twist Cap to J4

18. PGT[A7 9.2 ft-lb, CW2, 30.5]-7/16-6-in ext
Push in and engage left and right fasteners to hardstop ~7-12 turns
← Start both bolts before going to hardstop
Report torque and turns
19. Remove RET from WETA and stow on MWS
20. RET to then remove thermal shroud from WETA; temp stow on outside of C/L bag
21. Close TA clamps or Wire tie cables as necessary
22. Stow dummy box in C/L bag, if reqd
23. √Scoop in C/L bag

24. Inspect gloves
25. Translate to PAS Worksite
</td>
<td>
7. Inspect gloves
8. Translate to PAS Worksite
</td>
</tr>
</table>

EVA 4 CP1 WETA INSTALL – TASK DATA

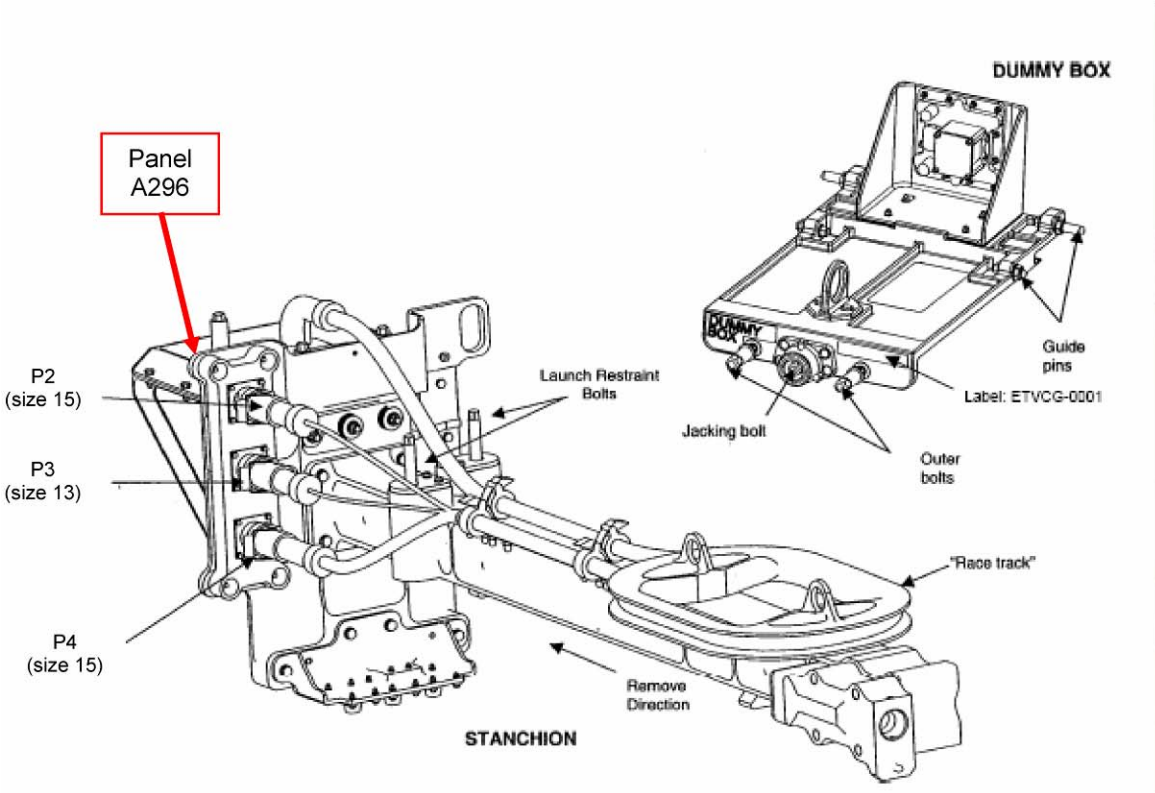

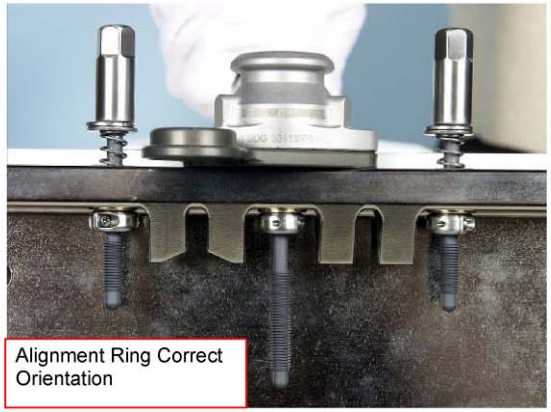

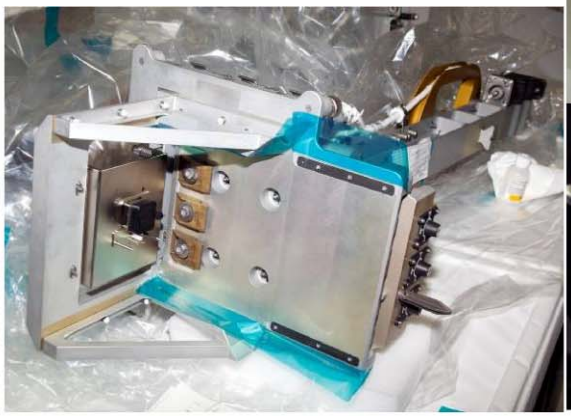

EVA 4 CP1 WETA INSTALL – TASK DATA (Cont)

Estimated Task Duration:

	With SSRMS	Without SSRMS
One EV Crew	N/A	TBD
Two EV Crew	N/A	00:40

ORU Identification:

ORU	Part number	Serial Number
WETA	16103320-301	1003

ORU Specs:

ORU	Dimensions (in)	Mass (lb)
WETA	34x18x18	105.8

Tools:

EV1 (FF)	EV2 (FF)
PGT	PGT
7/16-6-in wobble	7/16-6-in wobble
Round Scoop (on WETA in A/L)	
Wire ties	

Foot Restraints: None

EVA Fasteners:

Fastener Name	Head Size	Qty	Install Torque (ft-lb)	Release Torque (ft-lb)	Failure Torque (ft-lb)	Turns	RPM
Dummy Box (Outer)	7/16	2	N/A	7.0	17.1	6.8-11.8	30
Dummy Box (Center)	7/16	1	N/A	7.0	17.1	24.4-30.4	30
WETA (Outer)	7/16	2	9.2	N/A	13.2	6.8-12.8	30
WETA (Center)	7/16	1	9.2	N/A	13.2	24.4-30.4	30

Electrical Connectors:

Harness	From	To	Size
Dead Face Connector	S3 J2	VSSA Dummy Panel	15
Dead Face Connector	S3 J3	VSSA Dummy Panel	13
Connector Cap	S3 J4	VSSA Dummy Panel	15
W8200-P2	VSSA Dummy Panel	S3 J2	15
W8200-P3	VSSA Dummy Panel	S3 J3	13
W8200-P4	VSSA Dummy Panel	S3 J4	15

Connector Inhibits:

1. RPCM S31A_A RPC 15 – Open, Close Cmd Inhibit
2. RPCM S31A_A RPC 16 – Open, Close Cmd Inhibit
3. RPCM S32B_A RPC 15 – Open, Close Cmd Inhibit
4. RPCM S32B_A RPC 16 – Open, Close Cmd Inhibit

Timeline Considerations:

1. WETA thermal clock is 9 hr with thermal cover and 4 hr with no thermal cover
2. WETA thermal cover must be removed before WETA heater activation

Notes:

1. Dummy panel A296 is on bottom of VSSA mounting plate ~4 ft from S3 face 4; S3 A78 is just inside S3 face 4

Cautions:

1. N/A

Warnings:

1. N/A

EVA 4 S3 OUTBOARD NADIR PAS DEPLOY (01:15)

<table>
<tr><th>IV</th><th>EV1/2</th></tr>
<tr><td rowspan="5">1. Verify S1 Lower Outboard Camera aimed at PAS

Deploy Clevis Bracket Bolts Released
<table><tr><td></td><td>1</td><td>2</td><td>3</td><td>4</td></tr><tr><td>Bolt</td><td></td><td></td><td></td><td></td></tr></table></td><td>On IV GO: <u>S3 PAS DEPLOY – OUTBOARD NADIR</u>

<u>CAUTION</u>
Avoid inadvertent contact with grapple fixture shafts and target pins

❑ <u>Swivel Deploy Clevis Bracket/Release Pins</u> (EV1)
1. RET to Deploy Clevis Bracket
2. Swivel Deploy Clevis Bracket: (4 bolts) 10 turns on all bolts except pivot bolt, 8 turns
❑ PGT [B7 25.5 ft-lb, CCW2 30 RPM, 30.5]-7/16-6-in ext
3. Temp stow Deploy Clevis Bracket with RET on HR 3057</td></tr>
<tr><td>❑ <u>Install Gap Spanner</u> (EV2)
4. Attach gap spanner to yoke
5. Attach Adj/Gap Spanner/Adj tether to hinge line HR 3051
<u>NOTE</u>: Route under braces and attach to outboard portion of yoke</td></tr>
<tr><td>❑ <u>Release Yoke ADP and PIP Pin</u> (EV1)

<u>CAUTION</u>
When attempting to remove the Yoke PIP pin and ADP, do not impart more than 10 lbf
Yoke ADP does not have a stowage hole. Do not close ADP lock bracket when ADP is not inserted in a stowage/clevis hole

6. Release yoke PIP pin, secure using pre-installed wire tie → If unsuccessful go to step 8, else skip 8
7. Release yoke ADP, secure using pre-installed wire tie → If unsuccessful go to step 8, else skip 8</td></tr>
<tr><td>❑ <u>ADP/PIP Pin Contingency Removal</u>
8. Complete step 8 only if step 6 and/or 7 were NO joy:
❑ Loosen Stow Clevis Bracket bolts (4)
PGT [B7 25.5 ft-lb, CCW2 30 RPM, 30.5]-7/16-6-in ext, approx 4 turns each
❑ Re-attempt removal of yoke PIP pin and/or yoke ADP, secure using pre-installed wire tie</td></tr>
<tr><td>❑ <u>Hinge Line Prep</u> (EV2)
9. Remove hinge line ADPs (2), insert in stowage hole (toward station forward), confirm ADP closed
❑ Inboard
❑ Outboard</td></tr>
</table>

EVA 4 S3 OUTBOARD NADIR PAS DEPLOY (01:15) (Cont)

IV	EV1/2
	❑ Reposition Braces (EV2) 10. Release SARJ Launch Bolt by hand, approx 3 turns ccw necessary If reqd, **PGT** [**B6** 24.0 ft-lb, **CCW2** 30 RPM, 30.5] 11. Release SARJ Brace (cup-cone bolt), stop on turns; 35 turns, do not exceed 37 turns ❑ **PGT [B6** 24.0 ft-lb, **CCW3** 60 RPM, 30.5**]**-7/16-6-in ext (use **A7, CCW2** if desired to go to hardstop) 12. Attach SARJ Brace to Diagonal Strut, hand tighten SARJ Launch Bolt 1 turn cw 13. Release Diagonal Brace (cup-cone bolt), stop on turns; 35 turns, do not exceed 37 turns ❑ **PGT [B6** 24.0 ft-lb, **CCW3** 60 RPM, 30.5**]**-7/16-6-in ext (use **A7, CCW2** if desired to go to hardstop) CAUTION Do not lift diagonal brace more than ~7 deg out of rotation plane to prevent damage to hinge end 14. Guide Diagonal Brace and temp stow with tether to HR 3044 15. Swing yoke inside to provide room for removal of stow clevis bracket
Stow Clevis Bracket Bolts Released | | 5 | 6 | 7 | 8 | | Bolt | | | | |	❑ Swivel Stow Clevis Bracket (EV1) 16. RET to Stow Clevis Bracket 17. Swivel Stow Clevis Bracket: (4 bolts) 10 turns on all bolts except pivot bolt, 8 turns ❑ **PGT [B7** 25.5 ft-lb, **CCW2** 30 RPM, 30.5**]**-7/16-6-in ext 18. Temp stow Stow Clevis Bracket on HR 3044
SYNC POINT	❑ Deploy PAS to Detent (EV2) 19. Deploy PAS to detent, tend with Adj/Gap Spanner/Adj, lead with yoke – (10 deg past vertical) 20. Reposition Adj/Gap Spanner/Adj at hinge end to take up slack to on HR 3060
SYNC POINT Record Torque and Turns of Stow Clevis Brackets: | Bolt # | 5 | 6 | 7 | 8 | | Initial Torque | | | | | | Turns | | | | |	❑ Reinstall Stow Clevis Bracket (EV1) ** THIS MUST BE DONE BEFORE PAS IS MOVED FROM DETENT TO FINAL DEPLOY** 21. Finger start Stow Clevis Bracket bolts (4), approx 1-2 turns 22. Engage Stow Clevis Bracket bolts (4) to hard stop, expect 10 turns ❑ **PGT [B2** 16.0 ft-lb, **CW2** 30 RPM, 30.5**]**-7/16-6-in ext ← Report torque and turns 23. Retrieve RET from bracket

IV	EV1/2
Record Torque and Turns for the Brace Bolts: Bolt | SARJ Brace | Diagonal Torque | | Turns | |	❑ Reposition Braces (EV2) ** THIS MUST BE DONE BEFORE PAS IS MOVED FROM DETENT TO FINAL DEPLOY** CAUTION Do not lift diagonal brace more than ~7 deg out of rotation plane to prevent damage to hinge end 24. Move Diagonal Brace into position for re-installation 25. Engage Diagonal Brace (cup-cone bolt) to hard stop, approx 35 turns ← ❑ **PGT [B2** 16.0 ft-lb, **CW2** 30 RPM, 30.5**]**-7/16-6-in ext Report torque and turns 26. Release SARJ Brace via SARJ Launch Bolt by hand, approx 1 turn ccw necessary 27. Engage SARJ Brace (Cup-Cone bolt) to hard stop, approx 38 turns ← ❑ **PGT [B2** 16.0 ft-lb, **CW2** 30 RPM, 30.5**]**-7/16-6-in ext Report torque and turns 28. ❑ Re-engage SARJ Launch Bolt bolt for temp stow; hand tighten cw 2-3 turns 29. Retrieve tether from brace temp stow location
Record Torque and Turns of Deploy Clevis Brackets: Bolt # | 1 | 2 | 3 | 4 Initial Torque | | | | Turns | | | | Final Torque | | | |	❑ Re-Install Deploy Clevis Bracket (EV1) ** THIS MUST BE DONE BEFORE PAS IS MOVED FROM DETENT TO FINAL DEPLOY** 30. Finger start Deploy Clevis Bracket bolts (4), approx 1-2 turns 31. Engage Deploy Clevis Bracket bolts (4) to hard stop, expect 10 turns ← ❑ **PGT [B5** 22.0 ft-lb, **CW2** 30 RPM, 30.5**]**-7/16-6-in ext Report torque and turns 32. Apply final Torque to Deploy Clevis Bracket bolts (4) in Ratchet Mode ← ❑ **PGT [RCW**, 30.5**]**-7/16-6-in ext, two clicks each bolt 33. Retrieve RET from bracket
	❑ Move PAS from Detent to Final Deploy Position 34. Disconnect Gap Spanner and Move platform from detent into install position, tend with Adj/Gap Spanner/Adj 35. Install yoke into Deploy Clevis Bracket ❑ Release wire tie securing PIP pin and ADP to yoke CAUTION When attempting to install the Yoke PIP pin and ADP, do not impart more than 10 lbf ❑ Install yoke ADP, √lock bracket engaged → If unsuccessful go to step 36, else skip 36 ❑ Install yoke PIP Pin → If unsuccessful go to step 36, else skip 36

<table>
<tr><th>IV</th><th>EV1/2</th></tr>
<tr><td rowspan="2">IV: Obtain GO from MCC-H for RTL Checkout

<table><tr><td>RTL #</td><td>1</td><td>2</td><td>3</td></tr><tr><td>PIP Pin</td><td></td><td></td><td></td></tr><tr><td>Test Complete</td><td></td><td></td><td></td></tr></table></td><td>❑ <u>ADP/PIP Pin Contingency Install</u>
36. Complete step 36 only if step 35 was NO joy:
❑ Loosen Deploy Clevis Bracket bolts (4), approx 4-6 turns
❑ Some bolts will require Torque Wrench 2-in ext at 31 ft-lb
❑ Remaining bolts, PGT [RCCW, 30.5]-7/16-6-in ext
❑ Re-attempt ADP Installation
❑ Re-attempt PIP pin Installation
❑ Engage Deploy Clevis Bracket bolts (4) to hard stop, approx 4-6 turns
❑ Some bolts will require RAD (attempt w/fingers first): PGT [A7 9.2 ft-lb, CW2 30 RPM, 30.5]-RAD w/7/16-2-in ext (count turns at bolt head)
❑ Remaining bolts, PGT [B5 22.0 ft-lb, CW2 30 RPM, 30.5]-7/16-6-in ext
❑ Apply final Torque
❑ Some bolts will require Torque Wrench 2-in ext at 31 ft-lb
❑ Remaining bolts, PGT [RCW, 30.5]-7/16-6-in ext</td></tr>
<tr><td>❑ <u>Cleanup/Prep PAS</u>
37. Release Adj/Gap Spanner/Adj
38. Extend Gap Spanner to full length and stow with Adj in trash bag
39. Translate under PAS UMA
40. Tether to hitch pin from EVA OVERRIDE anti-rotation cap, remove hitch pin
41. ❑ Remove anti-rotation cap and stow in trash bag
42. Translate to each Guide Vane (3) and perform:
❑ Remove launch restraint PIP pin from guide vane, stow in trash bag
❑ On MCC-H GO, depress and hold RTL lever for 15 sec, then release
❑ Verify with MCC-H good checkout, move to next guide vane

43. Translate to EBCS Target and perform:

<u>CAUTION</u>
EBCS target has finished surface that is susceptible to damage by contact

❑ Verify both EV crew are clear of target area
❑ Remove target cover, stow on backside of target assembly

44. Check gloves</td></tr>
</table>

EVA 4 S3 INBOARD ZENITH PAS DEPLOY (01:15)

IV	EV1/2
1. Verify SSRMS Camera aimed at PAS Deploy Clevis Bracket Bolts Released [ ] 1 [ ] 2 [ ] 3 [ ] 4 Bolt [ ] [ ] [ ] [ ]	On IV GO: S3 PAS DEPLOY – INBOARD ZENITH CAUTION Avoid inadvertent contact with grapple fixture shafts and target pins ❑ Swivel Deploy Clevis Bracket/Release Pins (EV1) 1. RET to Deploy Clevis Bracket 2. Swivel Deploy Clevis Bracket: (4 bolts) 10 turns on all bolts except pivot bolt, 8 turns ❑ **PGT [B7** 25.5 ft-lb, **CCW2** 30 RPM, 30.5**]**-7/16-6-in ext 3. Temp stow Deploy Clevis Bracket with RET on HR 3023
	❑ Install Gap Spanner (EV2) 4. Attach gap spanner to yoke 5. Attach Adj/Gap Spanner/Adj tether to hinge line HR 3013 NOTE: Route under braces and attach to outboard portion of yoke
	❑ Release Yoke ADP and PIP Pin (EV1) CAUTION When attempting to remove the Yoke PIP pin and ADP, do not impart more than 10 lbf Yoke ADP does not have a stowage hole. Do not close ADP lock bracket when ADP is not inserted in a stowage/clevis hole 6. Release yoke PIP pin, secure using pre-installed wire tie → If unsuccessful go to step 8, else skip 8 7. Release yoke ADP, secure using pre-installed wire tie → If unsuccessful go to step 8, else skip 8
	❑ ADP/PIP Pin Contingency Removal 8. Complete step 8 only if step 6 and/or 7 were NO joy: ❑ Loosen Stow Clevis Bracket bolts (4) **PGT [B7** 25.5 ft-lb, **CCW2** 30 RPM, 30.5**]**-7/16-6-in ext, approx 4 turns each ❑ Re-attempt removal of yoke PIP pin and/or yoke ADP, secure using pre-installed wire tie
	❑ Hinge Line Prep (EV2) 9. Remove hinge line ADPs (2), insert in stowage hole (toward station forward), confirm ADP closed ❑ Inboard ❑ Outboard

EVA 4 S3 INBOARD ZENITH PAS DEPLOY (01:15) (Cont)

IV	EV1/2
	❑ Reposition Braces (EV2) 10. Release Diagonal Brace (cup-cone bolt), stop on turns; 35 turns, do not exceed 37 turns ❑ **PGT [B6** 24.0 ft-lb, **CCW3** 60 RPM, 30.5**]**-7/16-6-in ext (use **A7, CCW2** if desired to go to hardstop) CAUTION Do not lift diagonal brace more than ~7 deg out of rotation plane to prevent damage to hinge end 11. Guide Diagonal Brace and temp stow with tether to HR 3023 12. Swing yoke inside to provide room for removal of stow clevis bracket
Stow Clevis Bracket Bolts Released Bolt: 5 ___ 6 ___ 7 ___ 8 ___	❑ Swivel Stow Clevis Bracket (EV1) 13. RET to Stow Clevis Bracket 14. Swivel Stow Clevis Bracket: (4 bolts) 10 turns on all bolts except pivot bolt, 8 turns ❑ **PGT [B7** 25.5 ft-lb, **CCW2** 30 RPM, 30.5**]**-7/16-6-in ext 15. Temp stow Stow Clevis Bracket on HR 3023
	❑ Deploy PAS to Detent (EV2) 16. Deploy PAS to detent, tend with Adj/Gap Spanner/Adj, lead with yoke – (10 deg past vertical) 17. Reposition Adj/Gap Spanner/Adj at hinge end to take up slack to on HR 3003
SYNC POINT **SYNC POINT**	
Record Torque and Turns of Stow Clevis Brackets: Bolt # 5 6 7 8 Initial Torque Turns	❑ Reinstall Stow Clevis Bracket (EV1) ** THIS MUST BE DONE BEFORE PAS IS MOVED FROM DETENT TO FINAL DEPLOY** 18. Finger start Stow Clevis Bracket bolts (4), approx 1-2 turns 19. Engage Stow Clevis Bracket bolts (4) to hard stop, expect 10 turns ❑ **PGT [B2** 16.0 ft-lb, **CW2** 30 RPM, 30.5**]**-7/16-6-in ext ← Report torque and turns 20. Retrieve RET from bracket
Record Torque and Turns for the Brace Bolt: Bolt: Diagonal Torque Turns	❑ Reposition Braces (EV2) ** THIS MUST BE DONE BEFORE PAS IS MOVED FROM DETENT TO FINAL DEPLOY** CAUTION Do not lift diagonal brace more than ~7 deg out of rotation plane to prevent damage to hinge end 21. Move Diagonal Brace into position for re-installation 22. Engage Diagonal Brace (cup-cone bolt) to hard stop, approx 35 turns ❑ **PGT [B2** 16.0 ft-lb, **CW2** 30 RPM, 30.5**]**-7/16-6-in ext ← Report torque and turns 23. Retrieve tether from brace temp stow location

IV	EV1/2
Record Torque and Turns of Deploy Clevis Brackets: Bolt # | 1 | 2 | 3 | 4 Initial Torque Turns Final Torque	❑ Re-Install Deploy Clevis Bracket (EV1) ****** THIS MUST BE DONE BEFORE PAS IS MOVED FROM DETENT TO FINAL DEPLOY****** 24. Finger start Deploy Clevis Bracket bolts (4), approx 1-2 turns 25. Engage Deploy Clevis Bracket bolts (4) to hard stop, expect 10 turns ← ❑ **PGT [B5** 22.0 ft-lb, **CW2** 30 RPM, 30.5**]**-7/16-6-in ext Report torque and turns 26. Apply final Torque to Deploy Clevis Bracket bolts (4) in Ratchet Mode ← ❑ **PGT [RCW**, 30.5**]**-7/16-6-in ext, two clicks each bolt 27. Retrieve RET from bracket
	❑ Move PAS from Detent to Final Deploy Position 28. Disconnect Gap Spanner and Move platform from detent into install position, tend with Adj/Gap Spanner/Adj 29. Install yoke into Deploy Clevis Bracket ❑ Release wire tie securing PIP pin and ADP to yoke CAUTION When attempting to install the Yoke PIP pin and ADP, do not impart more than 10 lbf ❑ Install yoke ADP, √lock bracket engaged → If unsuccessful go to step 30, else skip 30 ❑ Install yoke PIP Pin → If unsuccessful go to step 30, else skip 30
	❑ ADP/PIP Pin Contingency Install 30. Complete step 30 only if step 29 was NO joy: ❑ Loosen Deploy Clevis Bracket bolts (4), approx 4-6 turns ❑ Some bolts will require Torque Wrench 2-in ext at 31 ft-lb ❑ Remaining bolts, **PGT [RCCW**, 30.5**]**-7/16-6-in ext ❑ Re-attempt ADP Installation ❑ Re-attempt PIP pin Installation ❑ Engage Deploy Clevis Bracket bolts (4) to hard stop, approx 4-6 turns ❑ Some bolts will require RAD (attempt w/fingers first): **PGT [A7** 9.2 ft-lb, **CW2** 30 RPM, 30.5**]-**RAD w/7/16-2-in ext (count turns at bolt head) ❑ Remaining bolts, **PGT [B5** 22.0 ft-lb, **CW2** 30 RPM, 30.5**]**-7/16-6-in ext ❑ Apply final Torque ❑ Some bolts will require Torque Wrench 2-in ext at 31 ft-lb ❑ Remaining bolts, **PGT [RCW**, 30.5**]**-7/16-6-in ext

EVA 4 S3 INBOARD ZENITH PAS DEPLOY (01:15) (Cont)

<table>
<tr><th>IV</th><th>EV1/2</th></tr>
<tr>
<td>IV: Obtain GO from MCC-H for RTL Checkout

<table>
<tr><th>RTL #</th><th>1</th><th>2</th><th>3</th></tr>
<tr><td>PIP Pin</td><td></td><td></td><td></td></tr>
<tr><td>Test Complete</td><td></td><td></td><td></td></tr>
</table>
</td>
<td>❑ <u>Clean Up/Prep PAS</u>
31. Release Adj/Gap Spanner/Adj
32. Extend Gap Spanner to full length and stow with Adj in trash bag
33. Translate under PAS UMA
34. Tether to hitch pin from EVA OVERRIDE anti-rotation cap, remove hitch pin
35. ❑ Remove anti-rotation cap and stow in trash bag
36. Translate to each Guide Vane (3) and perform:
❑ Remove launch restraint PIP pin from guide vane, stow in trash bag
❑ On MCC-H GO, depress and hold RTL lever for 15 sec, then release
❑ Verify with MCC-H good checkout, move to next guide vane

37. Translate to EBCS Target and perform:

<u>CAUTION</u>
EBCS target has finished surface that is susceptible to damage by contact

❑ Verify both EV crew are clear of target area
❑ Remove target cover, stow on backside of target assembly

38. Check gloves</td>
</tr>
</table>

EVA 4 S3 PAS DEPLOY – TASK DATA

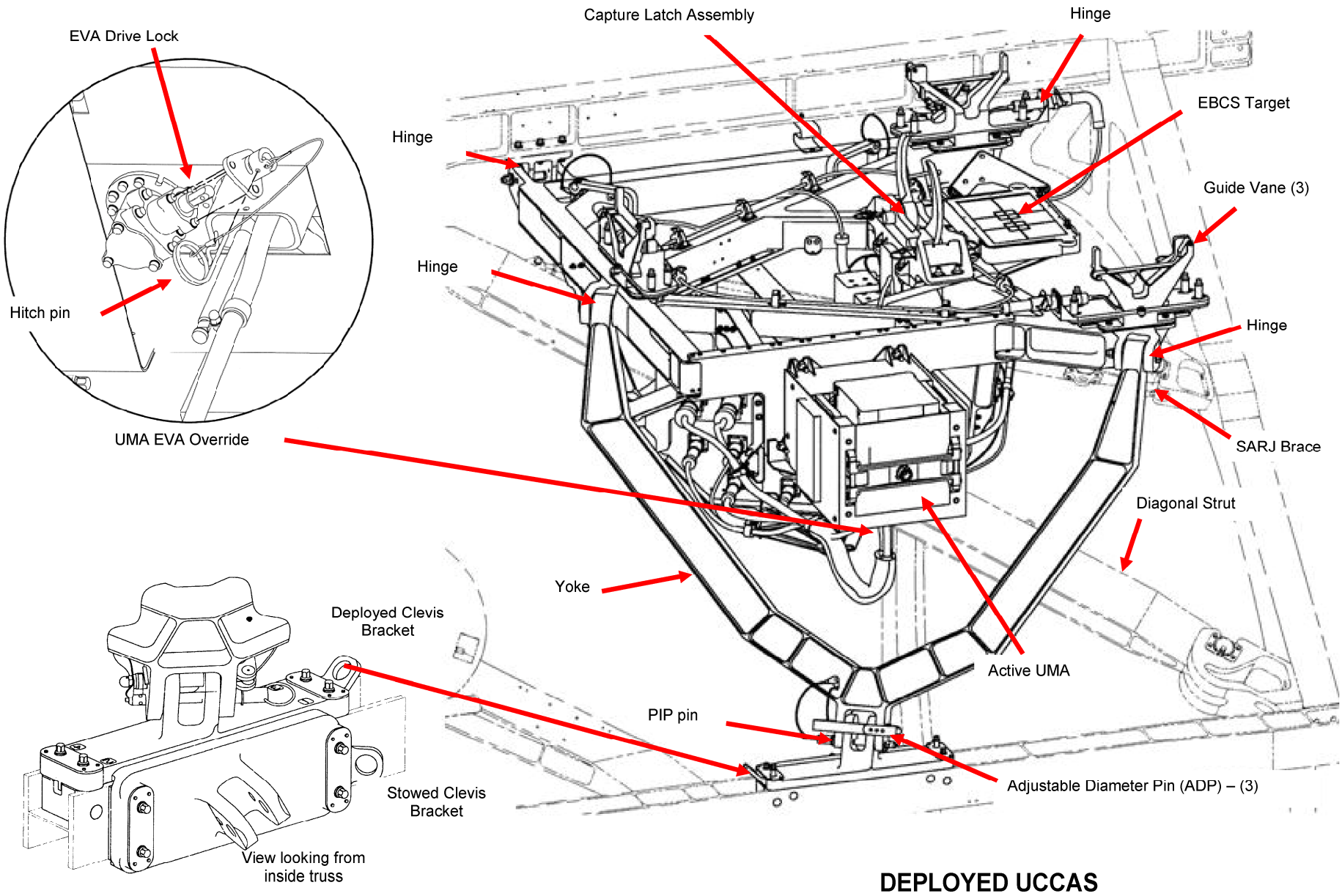

DEPLOYED UCCAS

HINGE LINE ADP ORIENTATION

EVA 4 S3 PAS DEPLOY – TASK DATA (Cont)

Estimated Task Duration:

	Without SSRMS
One EV Crew	N/A
Two EV Crew	01:15

Tools:

EV1	EV2
PGT	PGT
7/16-6-in socket ext	7/16-6-in socket ext
	Adj – 45-72-in Gap Spanner (Large) – Adj

EVA Fasteners:

Fastener Name	Head Size	Qty	Install Torque (ft-lb)	Release Torque (ft-lb)	Failure Torque (ft-lb)	Turns
SARJ Brace Launch Lock Bolt	7/16	1	16.0	24.0	32.3	
SARJ Brace cup/cone Bolt	7/16	1	16.0	24.0	14.0 and 31.6	37-40
Diagonal cup/cone bolt	7/16	1	16.0	24.0	14.0 and 31.6	37-40
Stowage Clevis	7/16	4	16.0	25.5	46.7	10
Deploy Clevis	7/16	4	30.5	25.5	106.6	10

Inhibits:

Inhibit
S3/S4 SARJ Locked

Notes:

1. UMA EVA Override anti-rotation cap must be removed prior to first use of UMA on PAS
2. EBCS target cover must be removed prior to cargo attachment to PAS. Protects target from MMOD and inadvertent contact. Remove as last activity
3. RAD drive may be needed for re-install of deployed clevis bracket. It will likely exceed RAD limits and need to be returned for refurb

Cautions:

1. Do not lift diagonal brace greater than 7 deg out of rotation plane when rotating to temp stowage location so as to not bend hinge end
2. Do not close ADP lock bracket when ADP is not inserted in a stowage/clevis hole. The pin can fall apart
3. EBCS target has finished surface that is susceptible to damage by contact

Warnings:

EVA 4 CLEANUP/INGRESS (00:40)

IV	EV1 – Swanson (FF)	EV2 – Arnold (FF)
Prior to Ingress: 1. Perform WVS PWRDN (PHOTO/TV, WVS CUE CARD)	CLEANUP 1. Stow EVA camera in C/L bag 2. Stow WETA MLI in C/L bag 3. Translate to S1 Safety Tether Anchor 4. Prepare Safety Tether for return to A/L ❑ On EV2 GO: Connect EV1 Waist Tether to EV2 Safety Tether (while EV2 safety tether anchor remains on HR) ❑ On EV2 GO: Release EV2 Safety Tether from S1 HR (3215) ❑ ❑ √Gate Closed (both hooks) ❑ ❑ √Hook Locked (both hooks) ❑ Release EV1 Safety Tether from S1 HR (3214) 5. Adjust TCV to begin cold soak, as reqd 6. Translate to A/L 7. Ingress A/L 8. Remove SCU from stowage pouch 9. Remove DCM cover; Velcro to DCM 10. Connect SCU to DCM; √SCU Locked 11. WATER – OFF (fwd), expect H2O IS OFF msg 12. Close thermal cover; attach Velcro strap	CLEANUP 1. Place C/L bag on BRT 2. Adjust TCV to begin cold soak, as reqd 3. Translate to A/L 4. Open hatch thermal cover 5. Complete safety tether re-config to A/L ❑ Connect EV2 waist tether to A/L D-ring ext ❑ √Gate Closed ❑ √Hook Locked 6. Give EV1 GO to attach Waist Tether to EV2 Safety Tether 7. Give GO to EV1 to release EV2 safety tether anchor 8. Stow CL bag in A/L 9. Ingress A/L 10. Remove SCU from stowage pouch 11. Remove DCM cover; Velcro to DCM 12. Connect SCU to DCM; √SCU Locked 13. WATER – OFF (fwd), expect H2O IS OFF msg
	CAUTION Do not close hatch until EMU Water OFF for 2 min. Verify outer hatch clear of hardware	
	13. √EV hatch clear of FOD and obstructions 14. Verify EV hatch handle position per hatch decal; close and lock Go to PRE-REPRESS (DEPRESS/REPRESS Cue Card)	Go to PRE-REPRESS (DEPRESS/REPRESS Cue Card)

This Page Intentionally Blank

NOTES

NOTES

S3 INBOARD NADIR PAS DEPLOY (01:15)

IV

1. Verify S3/S4 SARJ locked and S1 TRRJ locked
2. Verify S1 Lower Outboard Camera aimed at PAS

Deploy Clevis Bracket Bolts Released

	1	2	3	4
Bolt				

EV1/2

On IV GO: S3 PAS DEPLOY – INBOARD NADIR

> CAUTION
> Avoid inadvertent contact with grapple fixture shafts and target pins

❑ Swivel Deploy Clevis Bracket/Release Pins (EV1)

1. RET to Deploy Clevis Bracket
2. Swivel Deploy Clevis Bracket: (4 bolts) 10 turns on all bolts except pivot bolt, 8 turns
   - ❑ **PGT [B7** 25.5 ft-lb, **CCW2** 30 RPM, 30.5**]**-7/16-6-in ext
3. Temp stow Deploy Clevis Bracket with RET on HR 3025

❑ Install Gap Spanner (EV2)

4. Attach gap spanner to yoke
5. Attach Adj/Gap Spanner/Adj tether to hinge line HR 3017
   NOTE: Route under braces and attach to outboard portion of yoke

❑ Release Yoke ADP and PIP Pin (EV1)

> CAUTION
> When attempting to remove the Yoke PIP pin and ADP, do not impart more than 10 lbf
> Yoke ADP does not have a stowage hole. Do not close ADP lock bracket when ADP is not inserted in a stowage/clevis hole

6. Release yoke PIP pin, secure using pre-installed wire tie → If unsuccessful go to step 8, else skip 8
7. Release yoke ADP, secure using pre-installed wire tie → If unsuccessful go to step 8, else skip 8

❑ ADP/PIP Pin Contingency Removal

8. Complete step 8 only if step 6 and/or 7 were NO joy:
   - ❑ Loosen Stow Clevis Bracket bolts (4)
     PGT [B7 25.5 ft-lb, **CCW2** 30 RPM, 30.5**]**-7/16-6-in ext, approx 4 turns each
   - ❑ Re-attempt removal of yoke PIP pin and/or yoke ADP, secure using pre-installed wire tie

❑ Hinge Line Prep (EV2)

9. Remove hinge line ADPs (2), insert in stowage hole (toward station forward), confirm ADP closed
   - ❑ Inboard
   - ❑ Outboard

S3 INBOARD NADIR PAS DEPLOY (01:15) (Cont)

IV	EV1/2
	❑ Reposition Braces (EV2) 10. Release Diagonal Brace (cup-cone bolt), stop on turns; 35 turns, do not exceed 37 turns ❑ **PGT [B6** 24.0 ft-lb, **CCW3** 60 RPM, 30.5**]**-7/16-6-in ext (use **A7, CCW2** if desired to go to hardstop) CAUTION Do not lift diagonal brace more than ~7 deg out of rotation plane to prevent damage to hinge end 11. Guide Diagonal Brace and temp stow with tether to HR 3025 12. Swing yoke inside to provide room for removal of stow clevis bracket
Stow Clevis Bracket Bolts Released | | 5 | 6 | 7 | 8 | | Bolt | | | | |	❑ Swivel Stow Clevis Bracket (EV1) 13. RET to Stow Clevis Bracket 14. Swivel Stow Clevis Bracket: (4 bolts) 10 turns on all bolts except pivot bolt, 8 turns ❑ **PGT [B7** 25.5 ft-lb, **CCW2** 30 RPM, 30.5**]**-7/16-6-in ext 15. Temp stow Stow Clevis Bracket on HR 3025
	❑ Deploy PAS to Detent (EV2) 16. Deploy PAS to detent, tend with Adj/Gap Spanner/Adj, lead with yoke (10 deg past vertical) 17. Reposition Adj/Gap Spanner/Adj at hinge end to take up slack to on HR 3010
SYNC POINT **SYNC POINT**	
Record Torque and Turns of Stow Clevis Brackets: | Bolt # | 5 | 6 | 7 | 8 | | Initial Torque | | | | | | Turns | | | | |	❑ Reinstall Stow Clevis Bracket (EV1) ** THIS MUST BE DONE BEFORE PAS IS MOVED FROM DETENT TO FINAL DEPLOY** 18. Finger start Stow Clevis Bracket bolts (4), approx 1-2 turns 19. Engage Stow Clevis Bracket bolts (4) to hard stop, expect 10 turns ❑ **PGT [B2** 16.0 ft-lb, **CW2** 30 RPM, 30.5**]**-7/16-6-in ext ← Report torque and turns 20. Retrieve RET from bracket
Record Torque and Turns for the Brace Bolt: | Bolt | Diagonal | | Torque | | | Turns | |	❑ Reposition Braces (EV2) ** THIS MUST BE DONE BEFORE PAS IS MOVED FROM DETENT TO FINAL DEPLOY** CAUTION Do not lift diagonal brace more than ~7 deg out of rotation plane to prevent damage to hinge end 21. Move Diagonal Brace into position for re-installation 22. Engage Diagonal Brace (cup-cone bolt) to hard stop, approx 35 turns ❑ **PGT [B2** 16.0 ft-lb, **CW2** 30 RPM, 30.5**]**-7/16-6-in ext ← Report torque and turns 23. Retrieve tether from brace temp stow location

S3 INBOARD NADIR PAS DEPLOY (01:15) (Cont)

<table>
<tr><th>IV</th><th>EV1/2</th></tr>
<tr><td>Record Torque and Turns of
Deploy Clevis Brackets:
<table><tr><td>Bolt #</td><td>1</td><td>2</td><td>3</td><td>4</td></tr><tr><td>Initial Torque</td><td></td><td></td><td></td><td></td></tr><tr><td>Turns</td><td></td><td></td><td></td><td></td></tr><tr><td>Final Torque</td><td></td><td></td><td></td><td></td></tr></table></td><td>❑ <u>Re-Install Deploy Clevis Bracket</u> (EV1)

** THIS MUST BE DONE BEFORE PAS IS MOVED FROM DETENT TO FINAL DEPLOY**

24. Finger start Deploy Clevis Bracket bolts (4), approx 1-2 turns
25. Engage Deploy Clevis Bracket bolts (4) to hard stop, expect 10 turns
← ❑ PGT [B5 22.0 ft-lb, CW2 30 RPM, 30.5]-7/16-6-in ext
Report torque and turns
26. Apply final Torque to Deploy Clevis Bracket bolts (4) in Ratchet Mode
← ❑ PGT [RCW, 30.5]-7/16-6-in ext, two clicks each bolt
27. Retrieve RET from bracket</td></tr>
<tr><td></td><td>❑ <u>Move PAS from Detent to Final Deploy Position</u>
28. Disconnect Gap Spanner and Move platform from detent into install position, tend with Adj/Gap Spanner/Adj
29. Install yoke into Deploy Clevis Bracket
❑ Release wire tie securing PIP pin and ADP to yoke

<u>CAUTION</u>
When attempting to install the Yoke PIP pin and ADP, do not impart more than 10 lbf

❑ Install yoke ADP, √lock bracket engaged → If unsuccessful go to step 30, else skip 30
❑ Install yoke PIP Pin → If unsuccessful go to step 30, else skip 30</td></tr>
<tr><td></td><td>❑ <u>ADP/PIP Pin Contingency Install</u>
30. Complete step 30 only if step 29 was NO joy:
❑ Loosen Deploy Clevis Bracket bolts (4), approx 4-6 turns
❑ Some bolts will require Torque Wrench
2-in ext at 31 ft-lb
❑ Remaining bolts, PGT [RCCW, 30.5]-7/16-6-in ext
❑ Re-attempt ADP Installation
❑ Re-attempt PIP pin Installation
❑ Engage Deploy Clevis Bracket bolts (4) to hard stop, approx 4-6 turns
❑ Some bolts will require RAD (attempt w/fingers first):
PGT [A7 9.2 ft-lb, CW2 30 RPM, 30.5]-RAD w/7/16-2-in ext
(count turns at bolt head)
❑ Remaining bolts, PGT [B5 22.0 ft-lb, CW2 30 RPM, 30.5]-7/16-6-in ext
❑ Apply final Torque
❑ Some bolts will require Torque Wrench
2-in ext at 30.5 ft-lb
❑ Remaining bolts, PGT [RCW, 30.5]-7/16-6-in ext</td></tr>
</table>

S3 INBOARD NADIR PAS DEPLOY (01:15) (Cont)

<table>
<tr><th>IV</th><th>EV1/2</th></tr>
<tr>
<td>IV: Obtain GO from MCC-H for RTL Checkout

<table>
<tr><td>RTL #</td><td>1</td><td>2</td><td>3</td></tr>
<tr><td>PIP Pin</td><td></td><td></td><td></td></tr>
<tr><td>Test Complete</td><td></td><td></td><td></td></tr>
</table>
</td>
<td>❑ <u>Clean Up/Prep PAS</u>
31. Release Adj/Gap Spanner/Adj
32. Extend Gap Spanner to full length and stow with Adj in trash bag
33. Translate under PAS UMA
34. Tether to hitch pin from EVA OVERRIDE anti-rotation cap, remove hitch pin
35. ❑ Remove anti-rotation cap and stow in trash bag
36. Translate to each Guide Vane (3) and perform:
❑ Remove launch restraint PIP pin from guide vane, stow in trash bag
❑ On MCC-H GO, depress and hold RTL lever for 15 sec, then release
❑ Verify with MCC-H good checkout, move to next guide vane

37. Translate to EBCS Target and perform:

<u>CAUTION</u>
EBCS target has finished surface that is susceptible to damage by contact

❑ Verify both EV crew are clear of target area
❑ Remove target cover, stow on backside of target assembly

38. Glove check</td>
</tr>
</table>

CONNECTOR INSULATING SLEEVE – CHANNEL 1/4 (S0)

IV	EV (FF)
1. IV/**MCC-H**: Verify Inhibits are in place: DDCU S0 1A 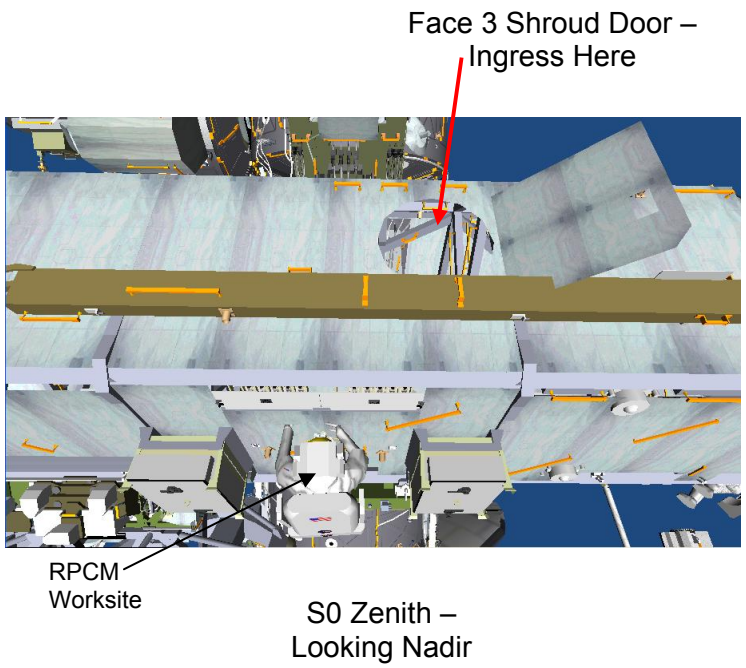 	1. Retrieve 1 connector sleeve (sz 33/37) 2. On IV GO (Inhibits completed) 3. Translate to S0 Bay 0 Face 3 4. Ingress aft shroud door 5. Install Connector Sleeve over affected connector ❑ Install P333 (W4145)/J333A (W4148) 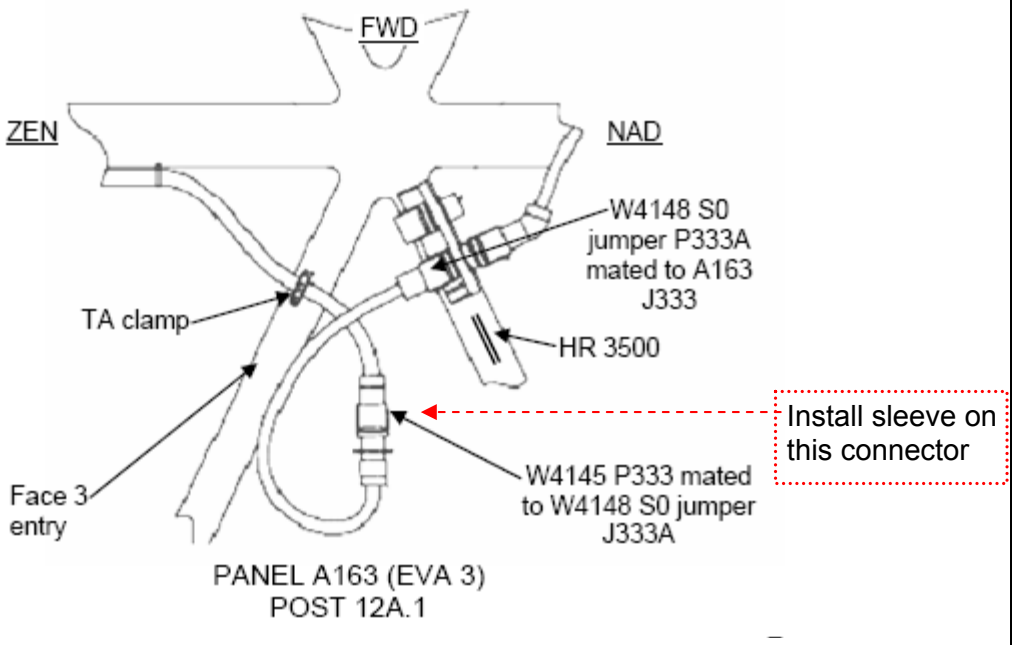

CONNECTOR INSULATING SLEEVE – MBS

IV	EV (FF)
1. IV/**MCC-H**: Verify Inhibits are in place: Worksite Dependent WS1: RPCM S3-4B_F RPCM S3-3A_F WS4: RPC S0-4B_A1 RPC S0-3A_A1 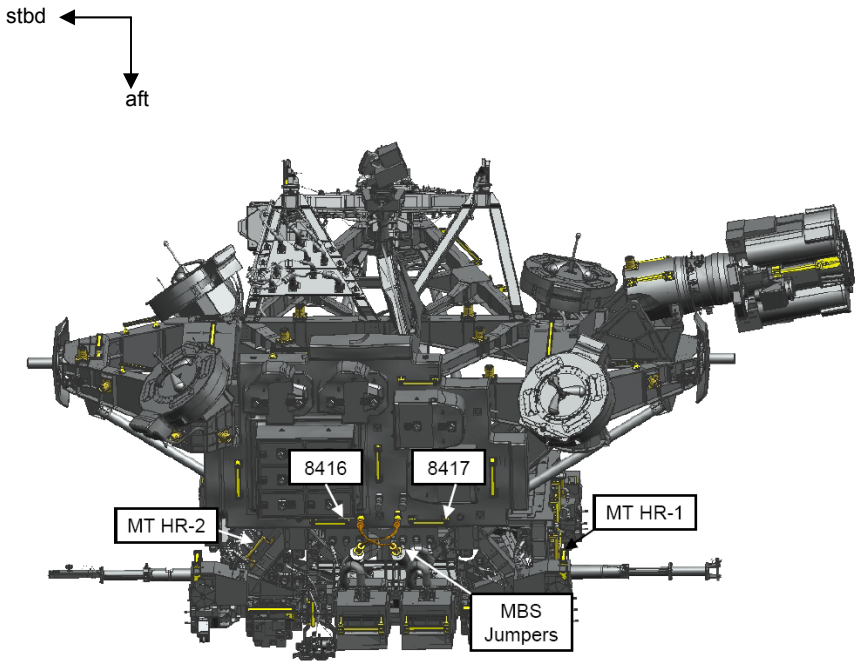 Nadir side of MT	1. Retrieve 2 connector sleeves (sz 21/25) 2. On IV GO (Inhibits completed) 3. Translate to nadir side of MT/MBS 4. Install Connector Sleeves (2) over affected connectors ❑ J2 (W9181)/P2 (A1W8031) ❑ J2 (W9182)/P2 (A2W8031) 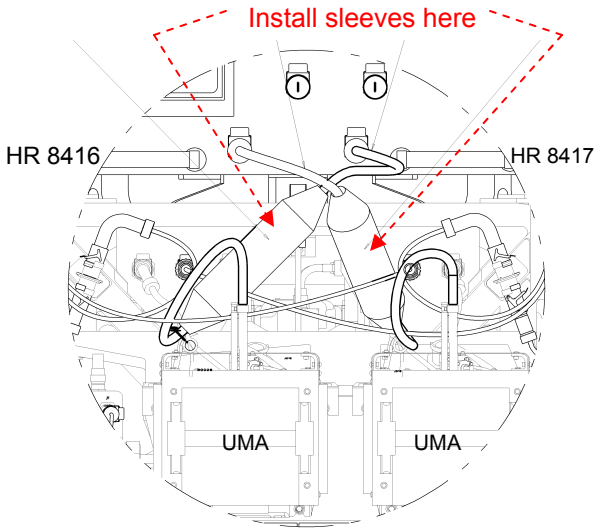

CONNECTOR INSULATING SLEEVE – SSPTS (NODE 1 FWD)

IV	EV (FF)
1. IV/**MCC-H**: Verify Inhibits are in place: RPCM Z1 3B_A2 RPCM Z1 4B_A2	1. Retrieve 2 connector sleeves (sz 33/37) 2. On IV GO (Inhibits completed) 3. Translate to Node 1 Fwd (stbd, zenith) – HRs N1 0137 & N1 0130 4. Install Connector Sleeves (2) over affected connectors ❑ P430/J430A ❑ P440/J440A 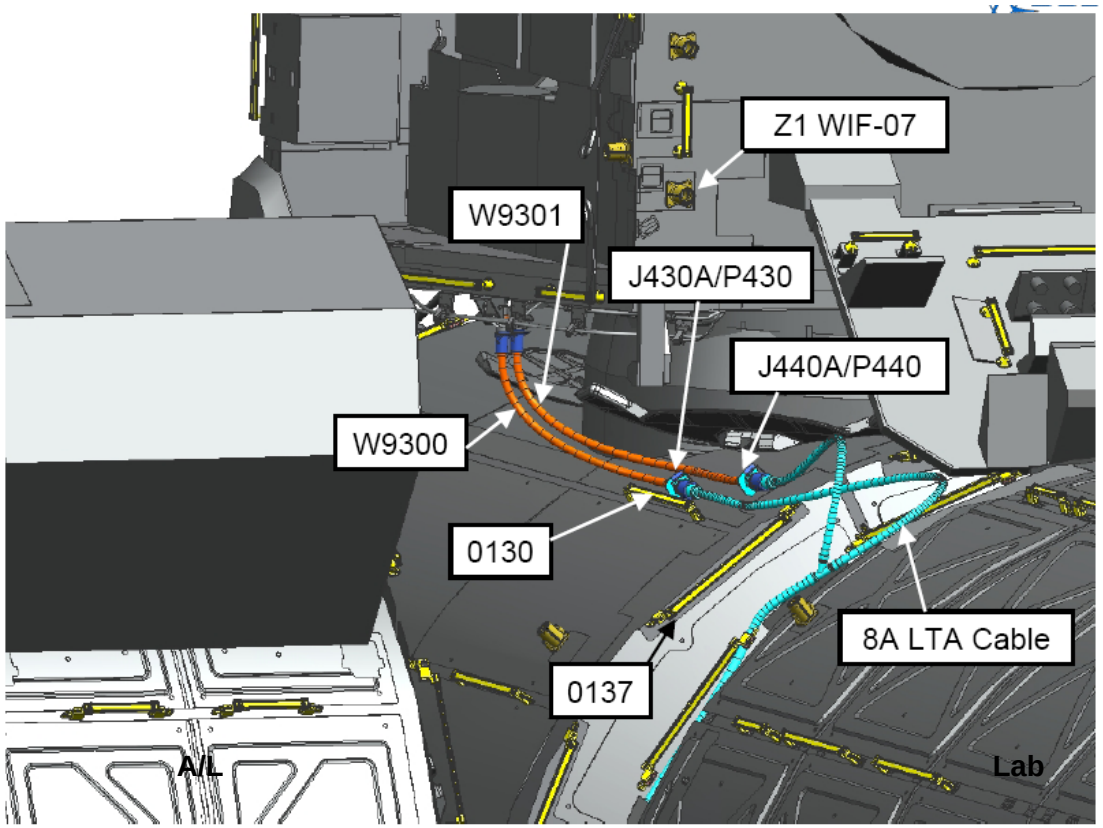

CONNECTOR INSULATING SLEEVE – SSPTS (LAB FWD)

IV	EV (FF)
1. IV/**MCC-H**: Verify Inhibits are in place: RPCM Z1 3B_A2 RPCM Z1 4B_A2	1. Retrieve 2 connector sleeves (sz 21/25) 2. On IV GO (Inhibits completed) 3. Translate to Lab Fwd (stbd) – HR Lab 0273 4. Install Connector Sleeves (2) over affected connectors ❑ P113/J113A ❑ P114/J114A 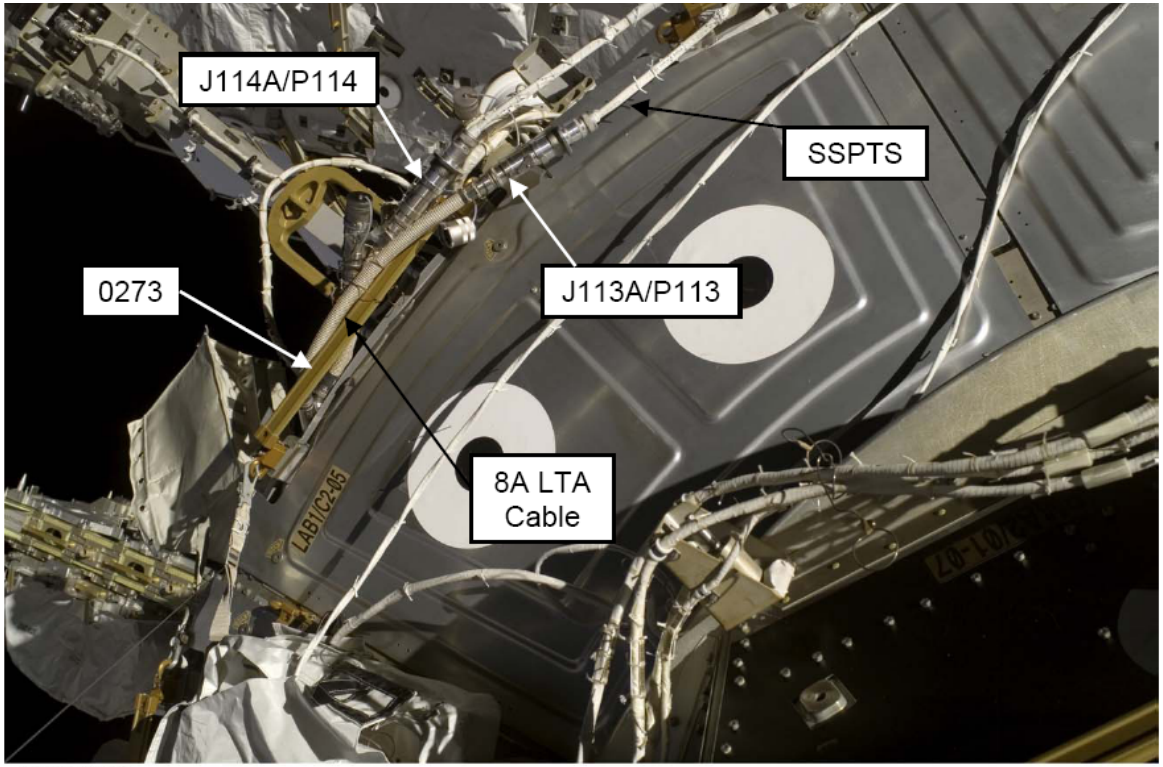 ISS014E13476

CONNECTOR INSULATING SLEEVE – SSPTS (PMA2 PORT)

IV	EV (FF)
1. IV/**MCC-H**: Verify Inhibits are in place: RPCM LA 1A4A_D3 RPCM Z1 4B_A2	1. Retrieve 1 connector sleeve (sz 21/25) 2. On IV GO (Inhibits completed) 3. Translate PMA2 port (midway) 4. Install Connector Sleeve over affected connector ❑ P3/J3A 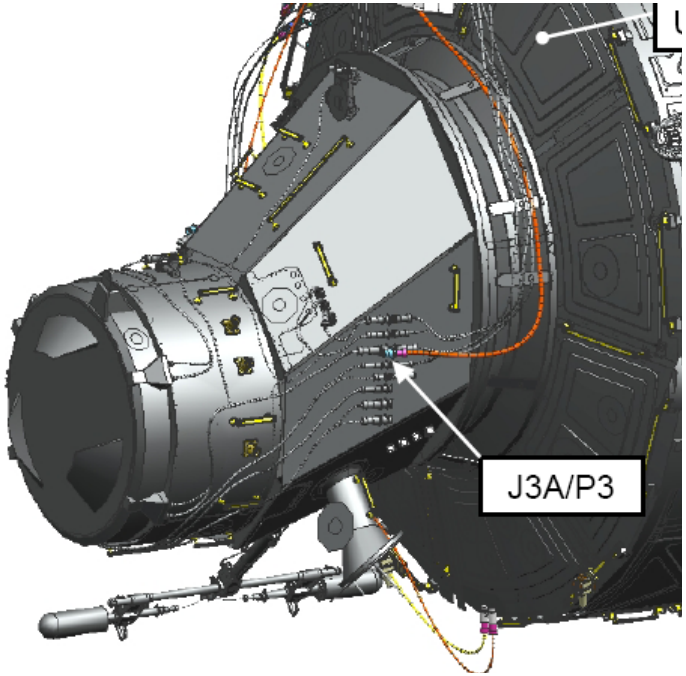

CONNECTOR INSULATING SLEEVE – SSPTS (PMA2 STBD)

IV	EV (FF)
1. IV/**MCC-H**: Verify Inhibits are in place: RPCM LA 2A3B_D1 RPCM Z1 3B_A2	1. Retrieve 1 connector sleeve (sz 21/25) 2. On IV GO (Inhibits completed) 3. Translate to PMA2 stbd (midway) – HR 0407 4. Install Connector Sleeve over affected connector ❑ P16/J16A 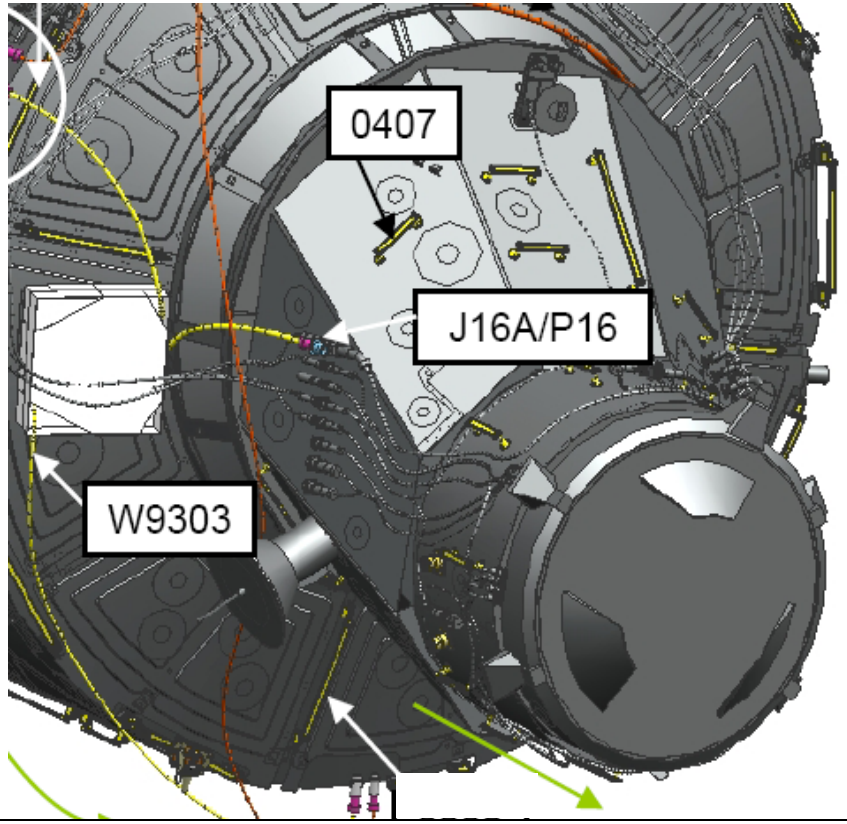

TOOLS AND STOWAGE

HW TOOL STOWAGE ASSEMBLY (TSA) ..... TEMP FS 8-2
PGT CHECKOUT 8-3
PGSC-PGT CONNECTION (A31P AND 760XD) 8-4
PROGRAM PGT SETTINGS 8-5
DOWNLOAD/ERASE EVENT LOG 8-5
PGT CONTINGENCIES 8-6
PGT STANDARD SETTINGS 8-7
TOOLBOX STOWAGE – STS-119/15A ..... FS 8-9
APFR MANAGEMENT – STS-119/15A ..... FS 8-10
SAFETY TETHERS – STS-119 (15A) ..... FS 8-11
TOOLBOX PANEL AND SLOT LABELS ..... FS 8-12
Z1 TOOLBOX INTERNAL LAYOUT ..... FS 8-13
AIRLOCK TOOLBOX INTERNAL LAYOUT ..... FS 8-14
APFR THERMAL SHIELD REMOVAL ..... FS 8-15
GREASE GUN NOZZLE MLI MODIFICATION ..... FS 8-16

HW TOOL STOWAGE ASSEMBLY (TSA)

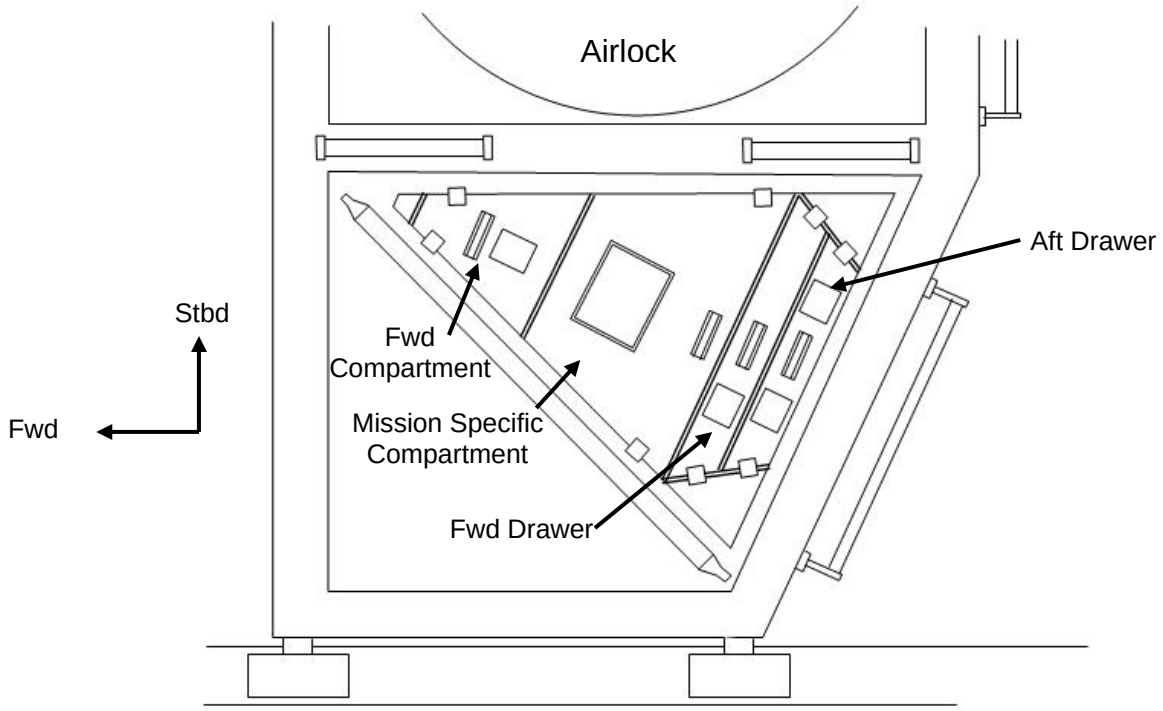

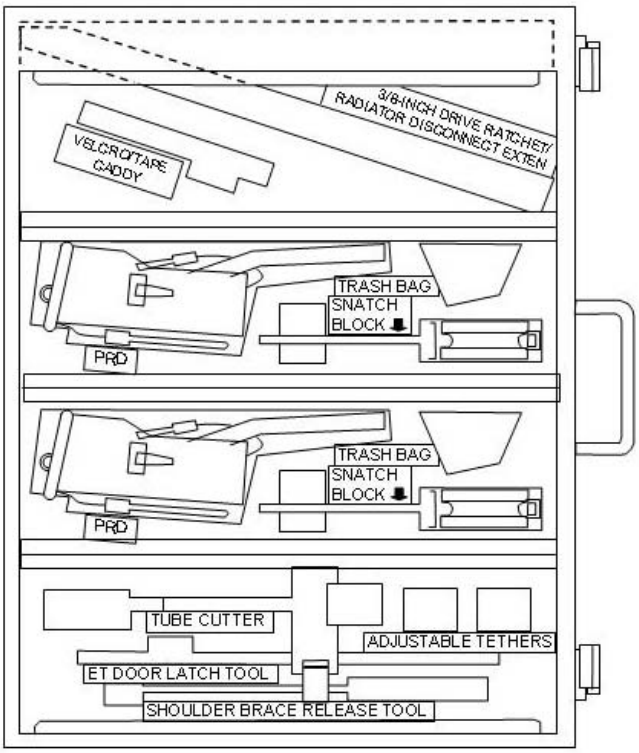

FORWARD DRAWER STOWAGE

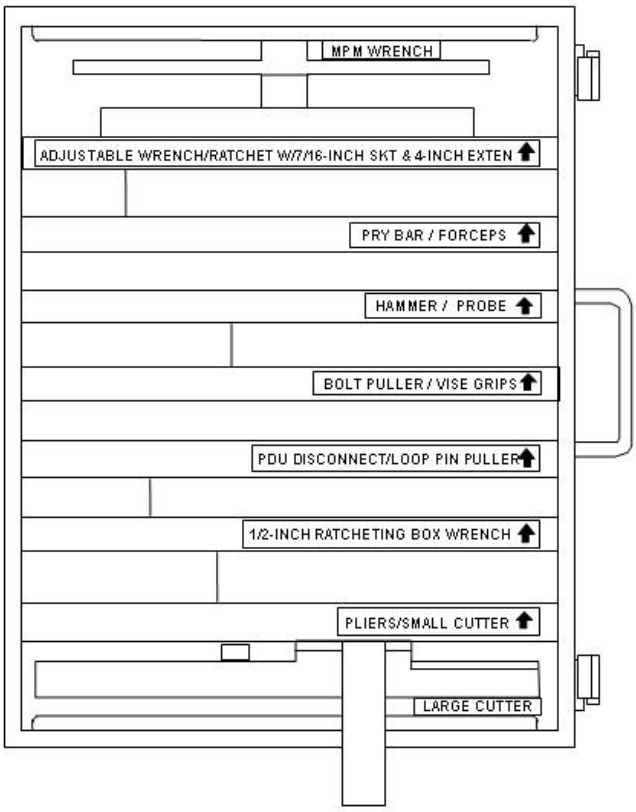

AFT DRAWER STOWAGE

HW TOOL STOWAGE ASSEMBLY (TSA) (Cont)

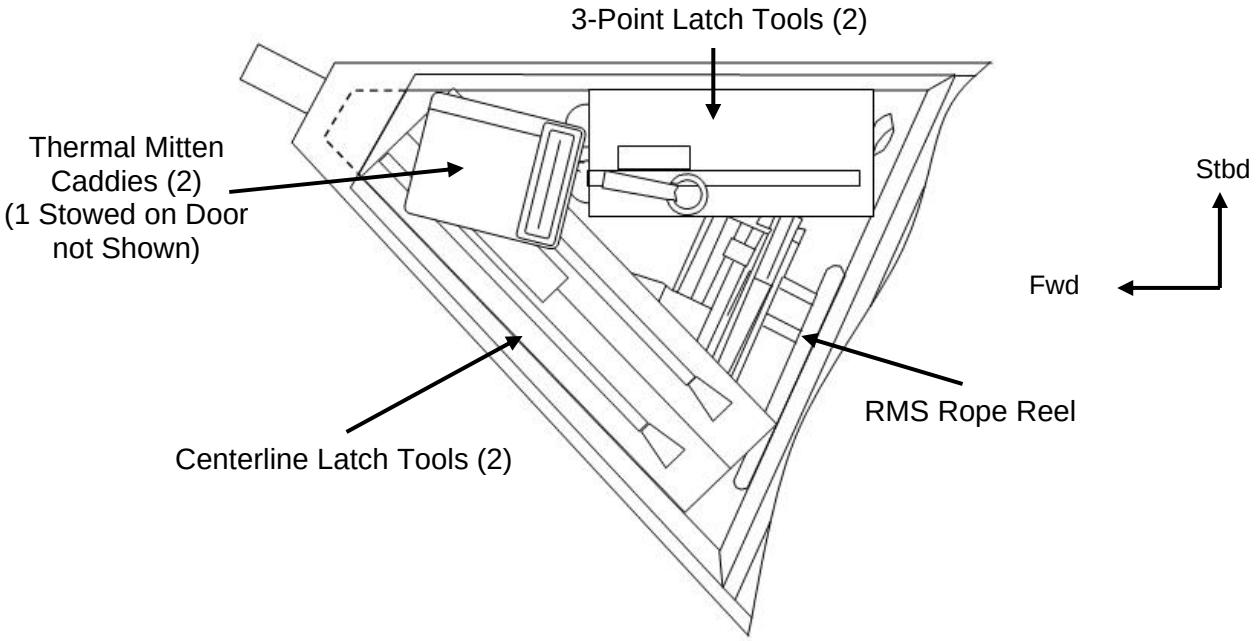

FORWARD COMPARTMENT STOWAGE CONFIGURATION
DOOR REMOVED FOR CLARITY

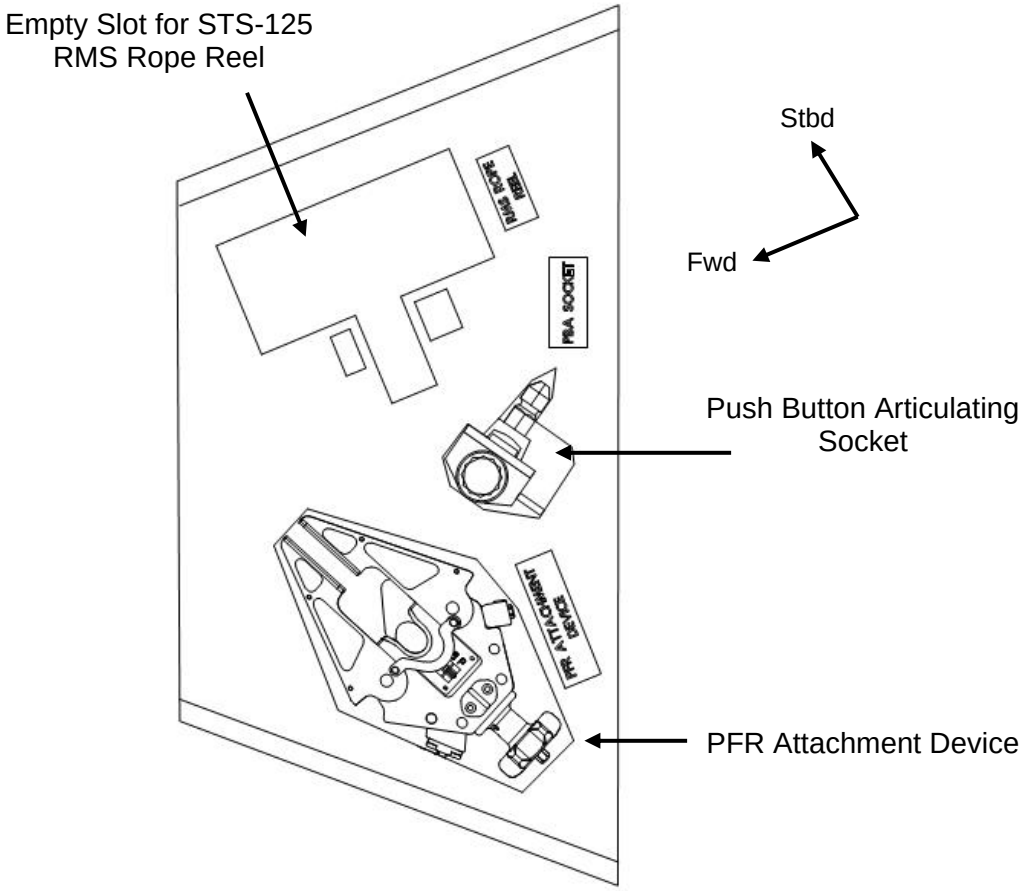

MISSION SPECIFIC COMPARTMENT

This Page Intentionally Blank

TOOLBOX STOWAGE – STS-119/15A

	Z1 PORT TOOLBOX (MMOD Damage – potential sharp edges) {all slots have sliders}	**Z1 STBD TOOLBOX** {all slots have sliders}	**A/L TOOLBOX 1 (STBD)**	**A/L TOOLBOX 2 (PORT)**
SLOT # 1	SQUARE TM BOARD {stbd door} SQ TORQUE MULTIPLIER 7/16" FLUSH SQ SOCKET 7/16" PROUD SQ SOCKET 7/16" RECESSED SQ SOCKET	SQUARE TM BOARD {stbd door} SQ TORQUE MULTIPLIER 7/16" FLUSH SQ SOCKET 7/16" PROUD SQ SOCKET 7/16" RECESSED SQ SOCKET	HAMMER BOARD {nadir door}	CABLE CUTTER BOARD COMPOUND CUTTERS (SM) SCISSORS {zenith door}
SLOT # 2		QD BAIL TOOL BOARD {stbd door} BMRRM LATCH TOOL QD BAIL DRIVE TOOL (1")	PLIERS BOARD {nadir door} NEEDLE NOSE PLIERS	
SLOT # 3	RATCHET BOARD {middle} 7/16" X 12" WOBBLE SOCKET 7/16" X 2" RIGID SOCKET	RATCHET BOARD {middle} 7/16" X 6" WOBBLE SOCKET	{only slot with slider}	{only slot with slider}
SLOT # 4				
SLOT # 5	ROUND TM BOARD {port door} RND TORQUE MULTIPLIER 5/8" PROUD RND SOCKET 7/16" FLUSH RND SOCKET 7/16" PROUD RND SOCKET	ROUND TM BOARD {port door} 7/16" FLUSH RND SOCKET 7/16" PROUD RND SOCKET	ADJ WRENCH BOARD FORCEPS WRENCH, ADJ {zenith door}	T-HANDLE TOOL BOARD 1-8" T-TOOLS {nadir door}
SLOT # 6	TRASH BAG BOARD {stbd door} SMALL TRASH BAG	TRASH BAG BOARD {stbd door}	HYDRAZINE BRUSH BOARD HYDRAZINE BRUSH {nadir door}	
SLOT # 7	SOCKET BOARD {port door} 5/32" BALL END ALLEN DR 1/2" X 8" WOBBLE SOCKET 5/16" X 7" RIGID SOCKET	SOCKET BOARD {port door} 5/32" BALL END ALLEN DR 1/2" X 8" WOBBLE SOCKET 5/16" X 7" RIGID SOCKET	PRD (Toolboard) {zenith door} PRD	PRD (Toolboard) {nadir door} PRD
PANEL # 8	CHEATER BAR PANEL {stbd door}	CHEATER BAR PANEL {stbd door} CHEATER BAR ADJ EQUIP TETHER	TOOL CADDY PANEL {nadir door} CADDY, ISS (BUNGEE)	
PANEL # 9	18" SOCKET PANEL {port door} 7/16" X 18" WOBBLE SOCKET	18" SOCKET PANEL {port door}	BOLT PULLER PANEL BOLT PULLER MECHANICAL FINGER {zenith door}	LARGE CUTTER PANEL {nadir door} Large Cutters (-303)
EXTERNAL	1 SQUARE SCOOP w/D-HANDLE (on zenith micro) (D-handle taped over repaired MMOD damage) 1 ROUND SCOOP D-HANDLE on port side of toolbox	1 SQUARE SCOOP <u>NOTE</u> D-Handle will not stow on the side of this toolbox due to an interference with the CMG MLI		

APFR MANAGEMENT – STS-119/15A

APFR DESIGNATOR	APFR 1 (8A, 13A.1 Pitch knob problem)	APFR 2 (US EVA 9 Pitch knob problem, 10A sticky locking collar)	APFR 3 s/n 1005 (no pitch knob prob 9A-inc12 suspected sharp edge on locking collar and possible sticky locking collar)	APFR 4 (TS, old ORU tether, heat shield)	APFR 5 (TS, old ORU tether, heat shield)	APFR 6 (heat shield removed on 12A.1 stage)	APFR 7 s/n 1008	IAPFR 1	IAPFR 2	CRANE (old ORU tether)	TS	ORU stanchion/ TERA headless	OTSD
Post STS-126	Lab WIF 7 [6,PP,F,12]	Lab WIF 4 [1,TT,C,11]	CETA 2 WIF 1 12, GG [6,II,F,6] ingress aid	Z1 WIF 08 [7,PP,B,6] TS at 4 o'clock	PMA1 WIF 2 [12,KK,F,6]	S1 WIF 1 [10,TT,L,12]	Lab WIF 11 [1,QQ,A,12]	Z1 WIF 1 [12,PP,F,12]	Z1 WIF 3 [6,PP,F,12]	PMA1 WIF 5	S0 port wedge face	S0 port wedge face	S0 WIF 7 CL=7
STS-119 EVA 1													
			CETA 2 WIF 4 12, GG [6,II,F,6] ingress aid										
STS-119 EVA 2													
	P6 WIF 30 [12,PP,F,12]	Relocating TS from APFR 4		IVA to remove heat shield			P6 WIF 10 [6,GG,E,6]						
STS-119 EVA 3													
			S0 WIF 42 [low-profile] ingress aid	A/L Starboard Toolbox WIF									
STS-119 EVA 4													
Post STS-119	P6 WIF 30 [12,PP,F,12]	Lab WIF 4 [1,MM,C,11] Tool Stanchion	S0 WIF 42 [low-profile] ingress aid	A/L Starboard Toolbox WIF	PMA1 WIF 2 [12,KK,F,6]	S1 WIF 1 [10,TT,L,12]	P6 WIF 10 [6,GG,E,6]	Z1 WIF 1 [12,PP,F,12]	Z1 WIF 3 [6,PP,F,12]	PMA1 WIF 5	S0 port wedge face	S0 port wedge face	S0 WIF 7 CL=7

SAFETY TETHERS – STS-119 (15A)

	55-ft tethers							**85-ft tethers**			
	#59 s/n 1007 Sm-sm	#71 s/n 1021 Lg-sm	#72 s/n 1022 Lg-sm (had 10A – retraction issues)	#73 s/n 1023 Lg-sm (AR written against this one) (1JA – slow retractor)	#60 s/n 1008 Lg-sm (has retracting issues)	#70 s/n 1020 Lg-sm	#66 s/n 1016 Sm-sm	#26 s/n 1002 Lg-sm	#28 s/n 1008 Lg-sm	#21 s/n 1001 (Shuttle safety tethers)	#24 s/n 1004 (Shuttle safety tethers)
Post 126 EVA 4	Returns on shuttle (MPLM)	INSIDE tether staging area	Returns on shuttle (MPLM)	INSIDE tether staging area	S0 HH 3539 or HH 3530 Tether on 3539 had retracting issues	S0 HH 3539 or HH 3530 Tether on 3539 had retracting issues	INSIDE tether staging area	INSIDE tether staging area	INSIDE tether staging area	Returned on shuttle	Returned on shuttle
126 Stage	----------same ----------							----------same ----------			
Post 119 EVA 4	Ground	INSIDE tether staging area	Ground	INSIDE tether staging area	S0 HH 3539 or HH 3530 Tether on 3539 had retracting issues	S0 HH 3539 or HH 3530 Tether on 3539 had retracting issues	INSIDE tether staging area	INSIDE tether staging area	INSIDE tether staging area	Returned on shuttle	Returned on shuttle

NOTE

During US EVA #8, EV2 reported that her 55-ft safety tether (P/N SEG33106674-307 s/n 1023, #73) was not retracting properly. EV2 attempted to perform the usual technique of pulling out some cable and then letting it reel in, but there came a point when EV2 was neither able to extend or retract the line with 6-8 ft of tether cable still extended. EV2 also cycled the tether from UNLOCK to LOCK and back to UNLOCK, with no joy. The tether was temp stowed as is until later (EV2 was attached to an 85-ft tether at this point.) During EVA cleanup, EV1 attempted to troubleshoot the tether, placing it in LOCK and extending quite a few more feet of cable from the tether. When the tether was placed back in UNLOCK it retracted completely, with a little bit of coaxing for the last couple feet of cable (typical behavior). The tether was brought inside. No further action required

TOOLBOX PANEL AND SLOT LABELS

NOTE

- A/L Toolbox: Slider feature located in center slot only (#3)
- Z1/CETA Toolbox: Slider feature located in all slots

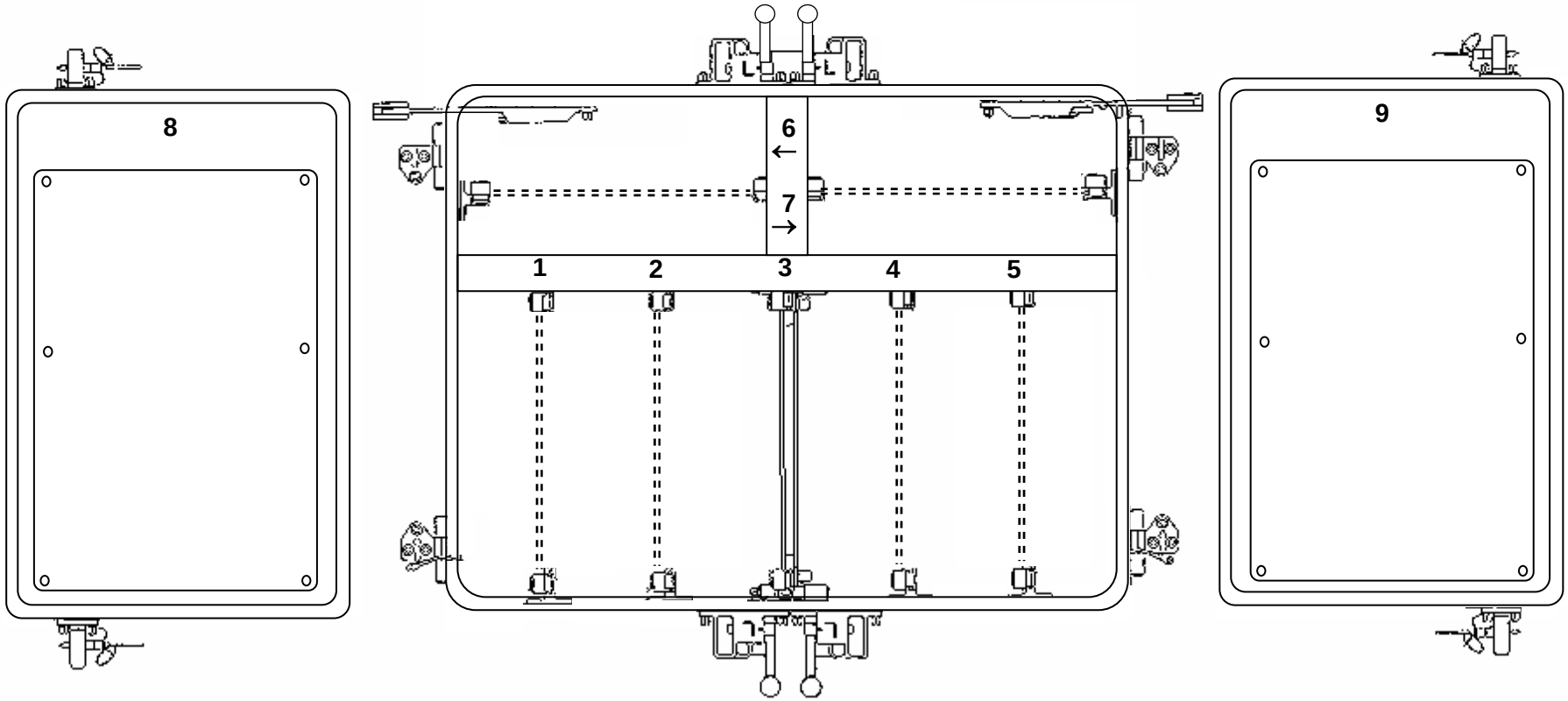

Z1 TOOLBOX INTERNAL LAYOUT

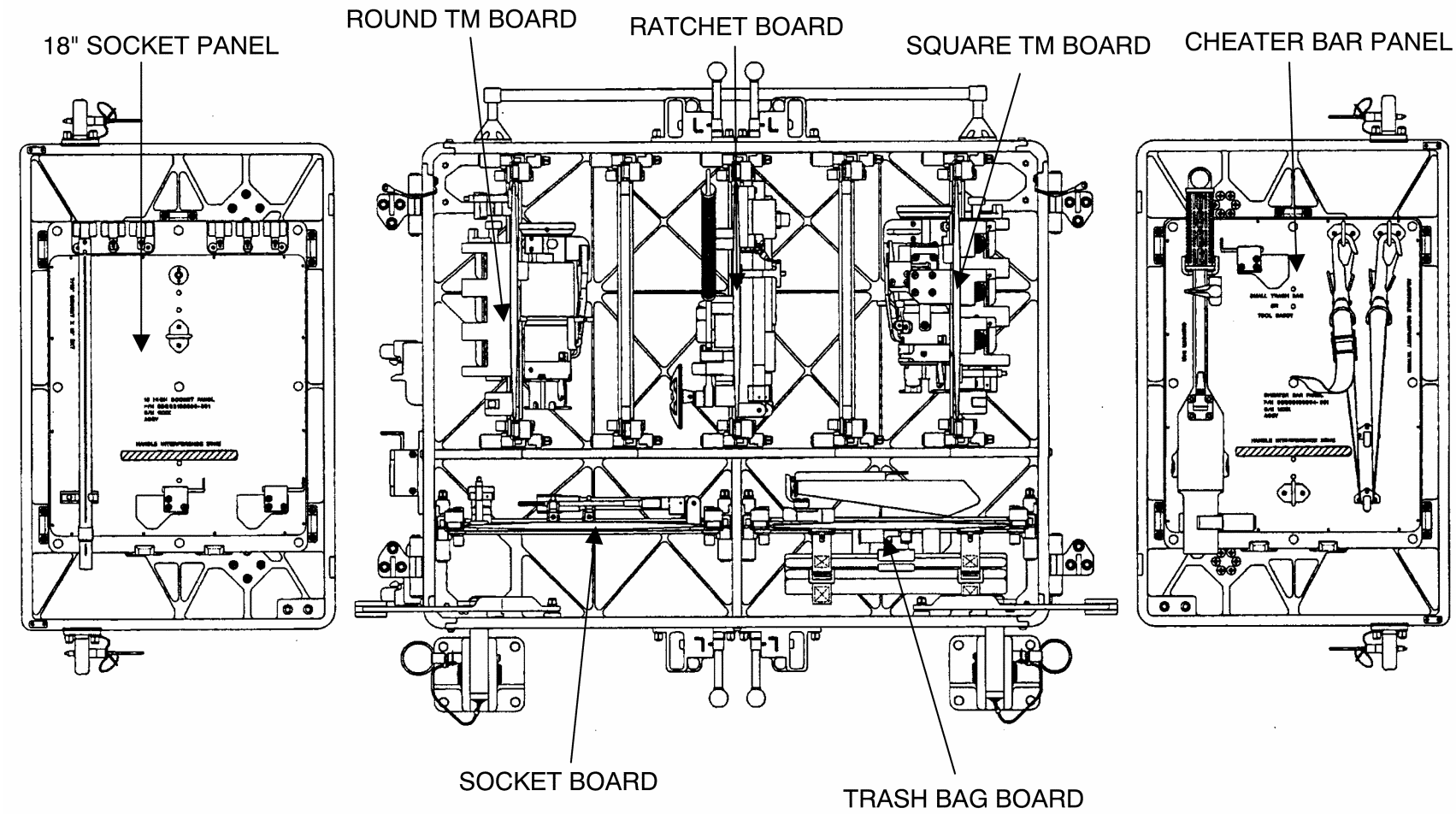

DOORS SHOWN REMOVED AND ROTATED 180° FROM CLOSED POSITION FOR CLARITY.

AIRLOCK TOOLBOX INTERNAL LAYOUT

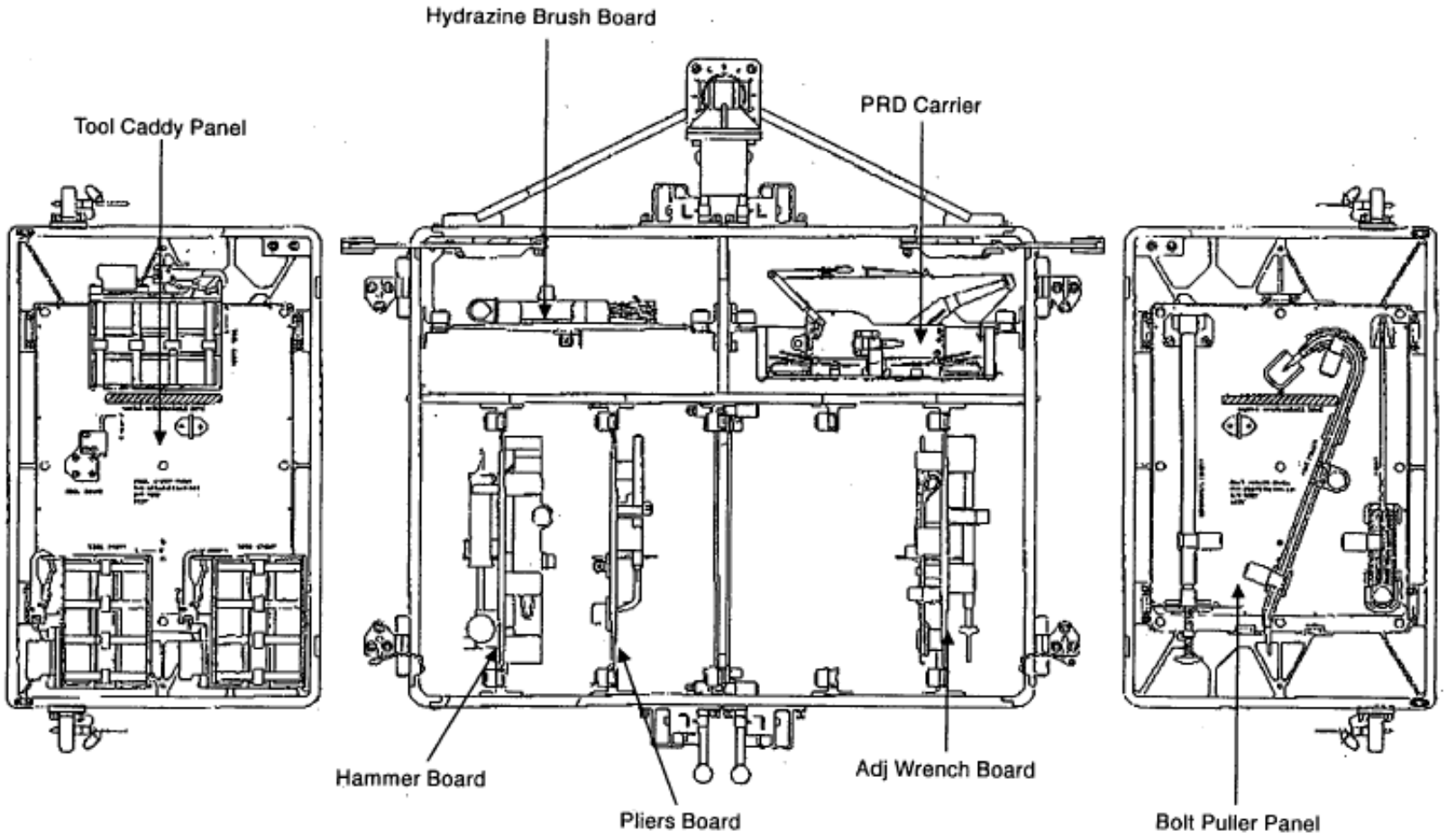

APFR THERMAL SHIELD REMOVAL

1. Retrieve the following:
   APFR
   Dry Wipes
   Ziplock Bag
   Sharpie
   Driver Handle, 3/8-in Drive – Drawer 2
   #8 Long Torq Driver, 3/8-in Drive – Drawer 3

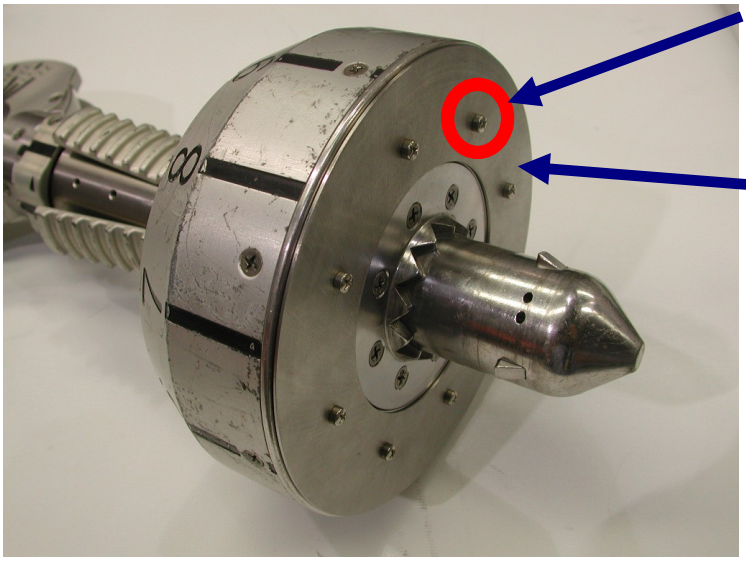

Figure 1. - Thermal Shield Location on APFR.

2. Remove APFR thermal shield non-captive screws (eight) (Driver, Handle, 3/8-in Drive; #8 Long Torq Driver, 3/8-in Drive). Expect a breaking torque of 10-30 in-lb
   Refer to Figure 1
   Stow screws in Ziplock Bag

CAUTION
Do not pry Thermal Shield off, damage could occur

3. Remove Thermal Shield; light tapping applied from side of Thermal Shield may be required (Driver Handle, 3/8-in Drive, blunt end)
   Temp stow thermal shield in Ziplock Bag

4. Inspect bottom of APFR Load Limiter for sharp edges

5. Wipe off Vibratite from bottom of Load Limiter (Dry Wipes). Vibratite may not come completely off; it is not essential to remove all residue

6. Label Ziplock Bag “15A APFR Thermal Shield, GMT 2009/XXX” and stow (Sharpie)

GREASE GUN NOZZLE MLI MODIFICATION

Perform the following steps for the straight nozzle gun (Grease) prior to the EVA 3 PRE TOOL CONFIG

1. Retrieve the following items:

ITEM	QTY	LOCATION
EV/IV tie-wrap	2	Shuttle IFM locker Tray 1, MA16L
1"x1" square Velcro pile	1	Shuttle IFM locker Tray 1, MA16L
Kapton tape	1 strips	Shuttle IFM locker Tray 1, MA16L
Scissors	1	Half CTB S/N 1154, NOD1O4C1

2. Cut small slit (~1/8-in) in center of Velcro square
3. Remove adhesive backing from Velcro square; discard backing
4. Insert tie-wrap into Velcro square (head of tie-wrap against pile side)

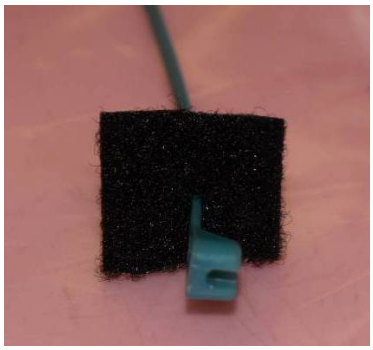

5. Insert tie-wrap and Velcro through orifice in nozzle MLI (Velcro square inside of cover)

6. Snug tie-wrap and Velcro to inside of cap

7. Slide second tie-wrap onto first tie-wrap and snug tight

8. Perform pull test (~5-7 lb) on tie-wrap; verify it remains captive in MLI
9. Cut off ends of tie-wraps

10. Wrap exposed edges of tie-wrap with Kapton tape

This Page Intentionally Blank

EMU MAINT/RECHARGE

WATER RECHARGE ..... TEMP FS 10-2
EMU POWERUP ..... TEMP FS 10-2
WATER FILL ..... TEMP FS 10-2
WATER FILL VERIFICATION ..... TEMP FS 10-2
EMU LiOH CHANGEOUT 10-4
MIDDECK EMU BATTERY RECHARGE (STAND-ALONE) 10-4a
MIDDECK EMU BATTERY RECHARGE/LiOH REPLACEMENT 10-5
INITIATE 10-5
TERMINATE 10-6
IN-SUIT EMU BATTERY RECHARGE/CHARGE VERIFICATION 10-7
INITIATE 10-7
TERMINATE 10-7
EMU POWERDOWN 10-7
HELMET LIGHT/PGT BATTERY RECHARGE 10-8
INITIATE 10-8
TERMINATE 10-9
REBA BATTERY INSTALLATION 10-9
EMU BATTERY REMOVAL/INSTALL 10-10
HELMET LIGHT BULB CHANGEOUT 10-11
REBA BATTERY RECHARGE 10-12
INITIATE 10-12
TERMINATE 10-13
CONSUMABLES TRACKING CUE CARD ..... FS CC 10-15
BATTERY RECHARGE/METOX REGEN CUE CARD ..... FS CC 10-16

WATER RECHARGE

IF EMU NOT ALREADY POWERED UP:

EMU POWERUP

BOTH DCM 1. Retrieve, position SCUs; remove DCM covers
2. Connect SCUs to DCM, √locked
3. PWR – BATT

> CAUTION
> EMU must be on BATT pwr when airlock pwr supply is turned on

AW18H 4. PWR/BATT CHGR EMU 1,2 MODE (two) – PWR
BUS SEL (two) – MNA(MNB)

MD(flr) 5. √EMU O2 ISOL VLV – OP

AW82B 6. EV1,2 O2 vlv (two) – OP

DCM 7. PWR – SCU

WATER FILL

MO13Q 8. √ARLK H2O S/O VLV – OPEN (tb-OP)

R11L 9. √SPLY H2O TKA OUTLET – CL (tb-CL)

SM 60 TABLE MAINT

CRT 10. Use TKB quantity:
PARAM ID – ITEM 1 +0 6 2 0 4 2 0 EXEC

11. Log value before recharge

Recharge #	H2O TKB %
1	
2	
3	
4	
5	

AW82D 12. √EMU 1,2 H2O WASTE tb (two) – CL
SPLY (two) – OP (tb-OP)

13. √H2O TKB quantity decreasing

> NOTE
> Full charge requires ~15 min

WATER FILL VERIFICATION

DCM 14. √STATUS: H2O WP 8-15 psi and stable for ~30 sec (indicates charging complete)

SM 60 TABLE MAINT

CRT 15. Use TKB quantity:
PARAM ID – ITEM 1 +0 6 2 0 4 2 0 EXEC

16. Log value after recharge

Recharge #	H2O TKB %
1	
2	
3	
4	
5	

Cont next page

TOP

HOOK VELCRO

CONSUMABLES TRACKING CUE CARD

SAFER usage s/n 1004 & 1007				EVA 1 EMU TV: ID 16 (Sw) & 18 (An)			Dump CWC s/n 1059		
	EMU	**LiOH (s/n) (B/C)**	**METOX (s/n) (B/C)**	**EMU Battery**	**REBA (s/n)**	**HL Battery (s/n)**	**PGT Battery (s/n)**	**PGT Battery Spare (s/n)**	**PWR (s/n)**
Campout			**0005/0022**						
EVA 1	**EV1 – Sw** EMU 3017	2014	N/A	2068	1008	1022/1025	1008	1009	
	EV2 – An EMU 3006	2015	N/A	2069	1006	1026/1030	1006		
Post					**Recharge**	**Recharge**	**Recharge**	**Recharge**	**1032**
Between	**Swap**			**Recharge**					
Campout			**0015/0016**						
EVA 2	**EV1 – Sw** EMU 3017	N/A	0007 7802J	2076	1008	1028/1029	1008	1009	
	EV3 – Ac EMU 3005	N/A	0011 7792J	2037	1009	1031/1035	1006		
Post			**Regen Campout**		**Recharge**	**Recharge**	**Recharge**	**Recharge**	**1032/1003**
Between	**Swap**			**Recharge 2076 only**					
Campout			**0015/0016**						
EVA 3	**EV2 – An** EMU 3006	N/A	0012 (none)	2074	1006	1022/1025	1006	1009	
	EV3 – Ac EMU 3005	N/A	0013 7794J	2075	1009	1026/1030	1008		
Post			**Regen Campout**		**Recharge**	**Recharge**	**Recharge**	**Recharge**	**1003**
Between	**Swap**			**Recharge**					
Campout			**0015/0016**			**IR Camera 1022**			
EVA 4	**EV1 – Sw** EMU 3017	N/A	0017 7811J	2068	1008	1028/1029	1008	1009	
	EV2 – An EMU 3006	N/A	0021 7814J	2069	1006	1031/1035	1006		
Post									**1003/1005**
Return	**EV1 – Sw** EMU 3017	2014		2074					
	EV2 – An EMU 3004	2015		2075					
Return	**Spare**			2037					

EVA-6a/119/O/B

(reduced copy)

TOP
BACK OF 'CONSUMABLES TRACKING CUE CARD'

HOOK VELCRO

BATTERY RECHARGE/METOX REGEN CUE CARD

Post EVA 1

HL-A BATTERIES: s/n 1022 (BC 2, CH 1); s/n 1025 (BC 1, CH 3); s/n 1026 (BC 1, CH 5); s/n 1030 (BC 1, CH 6)

PGT BATTERIES: PGT 2 (BC 2, CH ∅, ID ∅ PGT); s/n 1006 (BC 2, CH 4); s/n 1008 (BC 2, CH 5); s/n 1009 (BC 2, CH 6)

HL-B BATTERIES: HL-B/EMPTY 2 (BC 1, CH 2, ID 04 HL-B or 10 HL-B EMPTY); HL-B/EMPTY 3 (BC 1, CH 4, ID 05 HL-B or 10 HL-B EMPTY); HL-B/EMPTY 4 (BC 3, CH 3, ID 04 HL-B or 10 HL-B EMPTY); HL-B/EMPTY 5 (BC 4, CH 3, ID 05 HL-B or 10 HL-B EMPTY); HL-B/EMPTY 1 (BC 2, CH 2, ID 06 HL-B or 11 HL-B EMPTY)

FAN A | FAN B

PGT 1 (BC 1, CH ∅, ID ∅ PGT)

AUX. CHG. PORT: 1) BC 3, CH 2; 2) BC 4, CH 2; 3) BC 3, CH 5; 4) BC 4, CH 5; 5) BC 3, CH 6; 6) BC 4, CH 6

From BC 3 to REBA 1: s/n 1008

From BC 4 to REBA 2: s/n 1006

Metox Regens: none

HL | PGT | REBA

∅ = EMPTY

Post EVA 2

HL-A BATTERIES: s/n 1028 (BC 2, CH 1); s/n 1029 (BC 1, CH 3); s/n 1031 (BC 1, CH 5); s/n 1035 (BC 1, CH 6)

PGT BATTERIES: PGT 2 (BC 2, CH ∅, ID ∅ PGT); s/n 1006 (BC 2, CH 4); s/n 1008 (BC 2, CH 5); s/n 1009 (BC 2, CH 6)

HL-B BATTERIES: HL-B/EMPTY 2 (BC 1, CH ∅, ID ∅ HL-B or 10 HL-B EMPTY); HL-B/EMPTY 3 (BC 1, CH ∅, ID ∅ HL-B or 10 HL-B EMPTY); HL-B/EMPTY 4 (BC 3, CH ∅, ID ∅ HL-B or 10 HL-B EMPTY); HL-B/EMPTY 5 (BC 4, CH ∅, ID ∅ HL-B or 10 HL-B EMPTY); HL-B/EMPTY 1 (BC 2, CH ∅, ID ∅ HL-B or 11 HL-B EMPTY)

FAN A | FAN B

PGT 1 (BC 1, CH ∅, ID ∅ PGT)

AUX. CHG. PORT: 1) BC 3, CH 2; 2) BC 4, CH 2; 3) BC 3, CH 5; 4) BC 4, CH 5; 5) BC 3, CH 6; 6) BC 4, CH 6

From BC 3 to REBA 1: s/n 1008

From BC 4 to REBA 2: s/n 1009

Metox Regens: s/n 0015 b/c 7686J; s/n 0016 b/c 7796J

HL | PGT | REBA

∅ = EMPTY

After EVA 1

EMU Batteries: s/n 2068 (BC 3, CH 4); s/n 2069 (BC 4, CH 4)

After EVA 2

EMU Batteries: s/n 2076 (BC 3, CH 4); none (BC 4, CH 4)

After EVA 3

EMU Batteries: s/n 2074 (BC 3, CH 4); s/n 2075 (BC 4, CH 4)

Post EVA 3

HL-A BATTERIES: s/n 1022 (BC 2, CH 1); s/n 1025 (BC 1, CH 3); s/n 1026 (BC 1, CH 5); s/n 1030 (BC 1, CH 6)

PGT BATTERIES: PGT 2 (BC ∅, CH ∅, ID 06 PGT); s/n 1006 (BC 2, CH 4); s/n 1008 (BC 2, CH 5); s/n 1009 (BC 2, CH 6)

HL-B BATTERIES: HL-B/EMPTY 2 (BC 1, CH ∅, ID ∅ HL-B or 10 HL-B EMPTY); HL-B/EMPTY 3 (BC 1, CH ∅, ID ∅ HL-B or 10 HL-B EMPTY); HL-B/EMPTY 4 (BC 3, CH ∅, ID ∅ HL-B or 10 HL-B EMPTY); HL-B/EMPTY 5 (BC 4, CH ∅, ID ∅ HL-B or 10 HL-B EMPTY); HL-B/EMPTY 1 (BC 2, CH ∅, ID ∅ HL-B or 11 HL-B EMPTY)

FAN A | FAN B

PGT 1 (BC 1, CH ∅, ID ∅ PGT)

AUX. CHG. PORT: 1) BC 3, CH 2; 2) BC 4, CH 2; 3) BC 3, CH 5; 4) BC 4, CH 5; 5) BC 3, CH 6; 6) BC 4, CH 6

From BC 3 to REBA 1: s/n 1006

From BC 4 to REBA 2: s/n 1009

Metox Regens: s/n 0015 b/c 7686J; s/n 0016 b/c 7796J

HL | PGT | REBA

∅ = EMPTY

EVA-6b/119/O/B

(reduced copy)

DISPLAY LOSS DURING POWER TRANSFER (WARM RESTART)..... TEMP FS 12-2
VACUUM H2O RECHARGE (MANNED)..... TEMP FS 12-2
LiOH REPLACEMENT (MANNED)..... 12-3
BATTERY REPLACEMENT (MANNED) 12-4
WATER DUMP 12-6
SCU SWAP (UNMANNED)..... 12-7
SCU SWAP (MANNED)..... 12-7
EMU COLD RESTART (MANNED) 12-7
12.1 STS EVA DECONTAMINATION..... 12-8
CONTAMINATION TEST..... 12-15
SAFER BATTERY CHANGEOUT 12-18
BENDS TREATMENT ADAPTER (BTA) INSTALLATION (IN-SUIT) 12-19
BTA PREP 12-19
BTA TREATMENT 12-19
BENDS TREATMENT ADAPTER (BTA) INSTALLATION (POST SUIT DOFFING)..... 12-21
BTA PREP 12-21
BTA TREATMENT 12-21
EMU RESIZE..... 12-24
EMERGENCY UNDOCKING EVA TRANSFER ..... FS CC 12-27
EXPEDITED SUIT DOFFING CUE CARD ..... FS CC 12-28
STS-119 NOMINAL EMU SIZING ..... FS 12-29
EMU CONTINGENCY RESIZE MATRIX (STS-119/15A)..... FS 12-32

DISPLAY LOSS DURING POWER TRANSFER (WARM RESTART)

DCM If PWR – BATT and SCU connected:
AW18H 1. √PWR/BATT CHGR EMU 1(2) BUS SEL – OFF
DCM If PWR – SCU:
2. PWR – BATT
AW18H 3. PWR/BATT CHGR EMU 1(2) BUS SEL – OFF

> WARNING
> Fan will be off from steps 4 to 9 during which time CO2 buildup is a concern

> NOTE
> Affected EMU will be without comm after step 6. Steps 6 and 7 should be read together before step 6 is performed

DCM 4. FAN – OFF (expect FAN SW OFF msg, DISP – PRO)
IV 5. Inform affected EV crewmember of impending comm loss
DCM 6. PWR – SCU (7 sec)
7. PWR – BATT
When power restart complete:
8. √Display – O2 POS XX, expect FAN SW OFF msg, DISP – PRO
9. As reqd, FAN – ON
If display blank or locked up:
10. Contact MCC
If SCU power desired:
11. √SCU connected to DCM
AW18H 12. PWR/BATT CHGR EMU 1(2) MODE – PWR
BUS SEL – MNA(MNB)
13. √EMU INPUT 1(2) Volts = 18.0 – 20.0
DCM 14. PWR – SCU
DCM 15. √Display – O2 POS XX

VACUUM H2O RECHARGE (MANNED)

> WARNING
> Procedure should be used only if performing a contingency EVA

EV 1. Perform AIRLOCK INGRESS, Cuff C/L, 30 (Close hatch, partially engage latches)
2. √Helmet purge vlv – cl, locked
DCM 3. √PURGE vlv – cl (dn)
4. √WATER – OFF
IV MO13Q 5. √ARLK H2O S/O VLV – OPEN (tb-OP)
MD(flr) 6. √EMU O2 ISOL VLV – OP
ML86B:C 7. √cb MNC EXT ARLK HTR LINE ZN 1,2 (two) – op
AW82B 8. √EV-1(EV-2) O2 vlv – OP
EV AW18H 9. PWR/BATT CHGR EMU 1(2) BUS SEL – MNA(MNB)
DCM 10. PWR – SCU (fwd), WARN TONE
IV R11L If SPLY H2O XOVR VLV closed (tb-CL or bp) (water transfer config):
11. SPLY H2O TKA OUTLET – CL (tb-CL)
If SPLY H2O XOVR VLV open (tb-OP) (nominal config):
L1 12. √RAD CNTLR OUT TEMP – NORM
13. √FLASH EVAP CNTLR PRI A,B (two) – OFF
ML31C 14. SPLY H2O TKD OUTLET – CL (tb-CL)
R11L 15. SPLY H2O TKB OUTLET – CL (tb-CL)
√TKA OUTLET – CL (tb-CL)
TKC INLET – CL (tb-CL)
TKC OUTLET – OP (tb-OP)

TOP

HOOK
VELCRO

EMERGENCY UNDOCKING
EVA TRANSFER

Critical

- 2 EMUs: 3017 (Sw) & 3006 (An)/3004 (An)
  Time permitting:
  - Remove: Helmet Lights, TV, REBA, METOX, ISS Tethers and MWS w/Tools
  - EMU 3004 preferred – reconfig per EVA Prep for Transfer to Shuttle
- ECOKS (Sw & An)
- CCAs (Sw & An)
- Gloves (Sw & An)
- LCVG (Sw & An)
- EMU Batteries (2) (s/n 2074, 2075 desirable)
- 85-ft Safety Tethers (2)

Desired

- Shuttle Airlock Floor Bag
- (1) EMU Servicing Kit, s/n 5005 preferred

EVA-5a/119/O/A

TOP
BACK OF 'EMERGENCY UNDOCKING EVA TRANSFER'

HOOK
VELCRO

EXPEDITED SUIT DOFFING CUE CARD

CAUTION
Verify EV crew is clear of hatch mechanism

IV 1. When equalization complete: Open IV Hatch per decal

DOFFING SAFER (5 min)

SAFER 2. Remove latch covers
3. Latch → ENG
4. Latch ccw until release (~90 deg)
5. Doff SAFER

SUIT DOFFING (10 min)

DCM 6. O2 ACT → OFF
7. PURGE vlv → op (up)
PLSS 8. sw REBA → OFF (toward left arm of suit)
9. Engage EMU in EDDA
PLSS 10. EMU TV Power Cable ←|→ EMU EV
DCM 11. √STATUS: SUIT P < 0.4
12. Gloves ←|→ EMU
13. Helmet ←|→ EMU
DCM 14. sw FAN → OFF
15. Doff EMU
16. If taking EMUs to shuttle:
UIA sw PWR EV-1,2 (two) → OFF
√PWR EV-1,2 LEDs (four) – Off
DCM SCU ←|→ DCM
LTA →|← HUT
Gloves →|← EMU
Helmet →|← EMU
Go to the EMERGENCY UNDOCKING EVA TRANSFER Cue Card (opposite side)

EVA-5b/119/O/A

Swanson (Sw) up

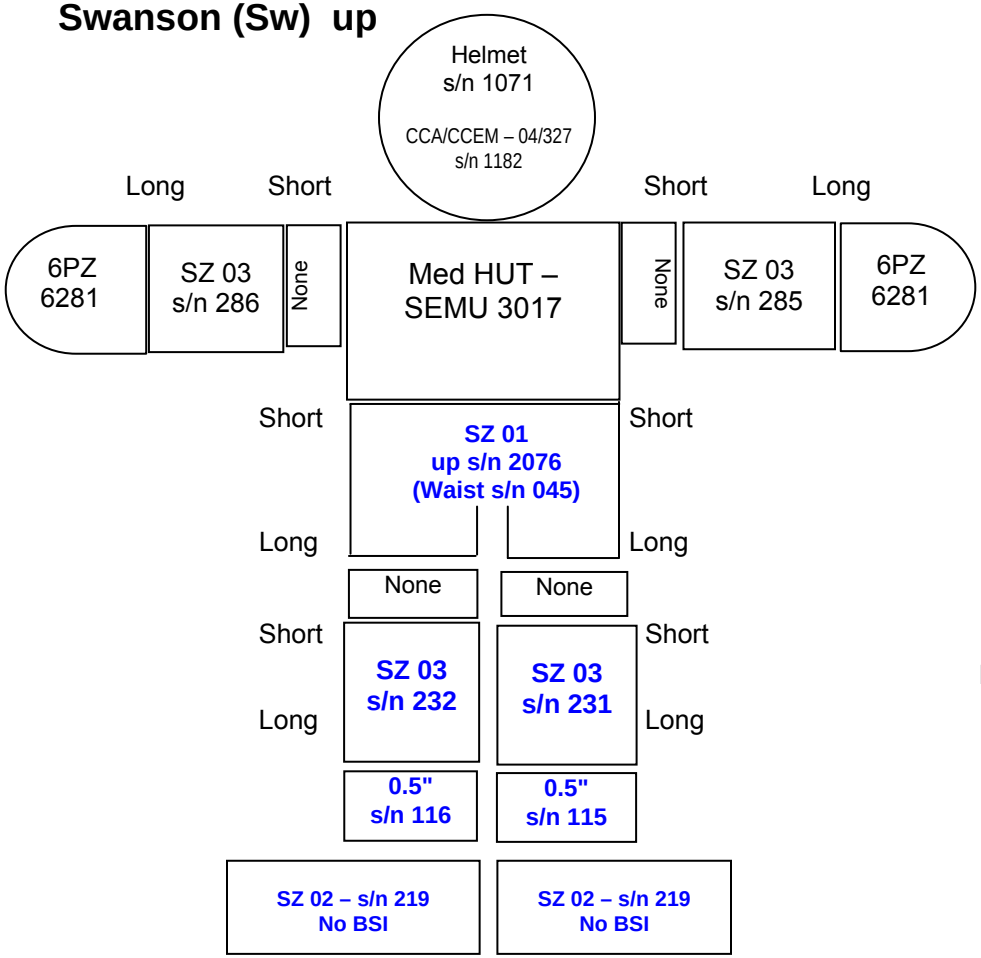

Swanson (Sw) down

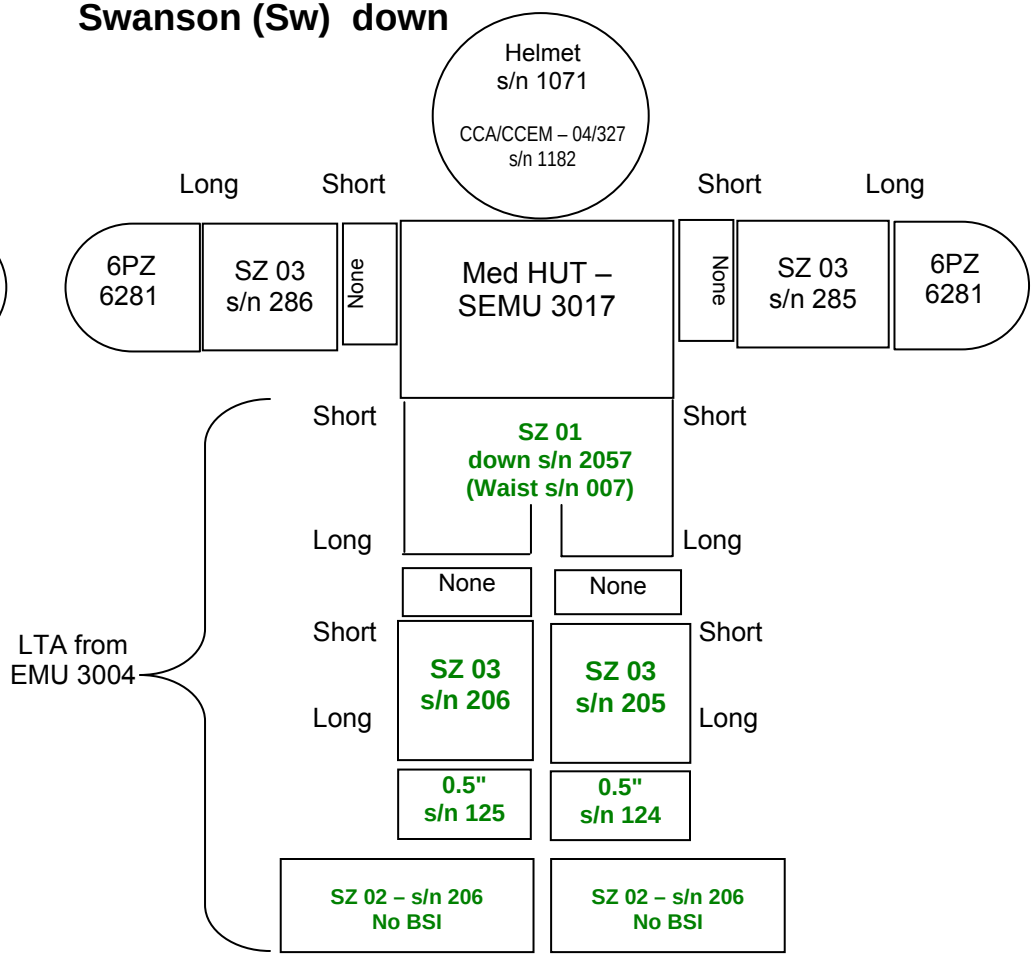

	Croakie	Fresnel Lens	Valsalva	LCVG/BLVD	MAG	TCU Top	TCU Bottom	Comfort Gloves	Socks
Sw	None	None	-308	03/05 Thermal Slippers	-709 (Med)	Med	Med	Thick Spectra (L)	Tube

Blue – Items launched on Shuttle to remain on ISS
Green – Items returning from ISS

STS-119 NOMINAL EMU SIZING (Cont)

Arnold (An) up

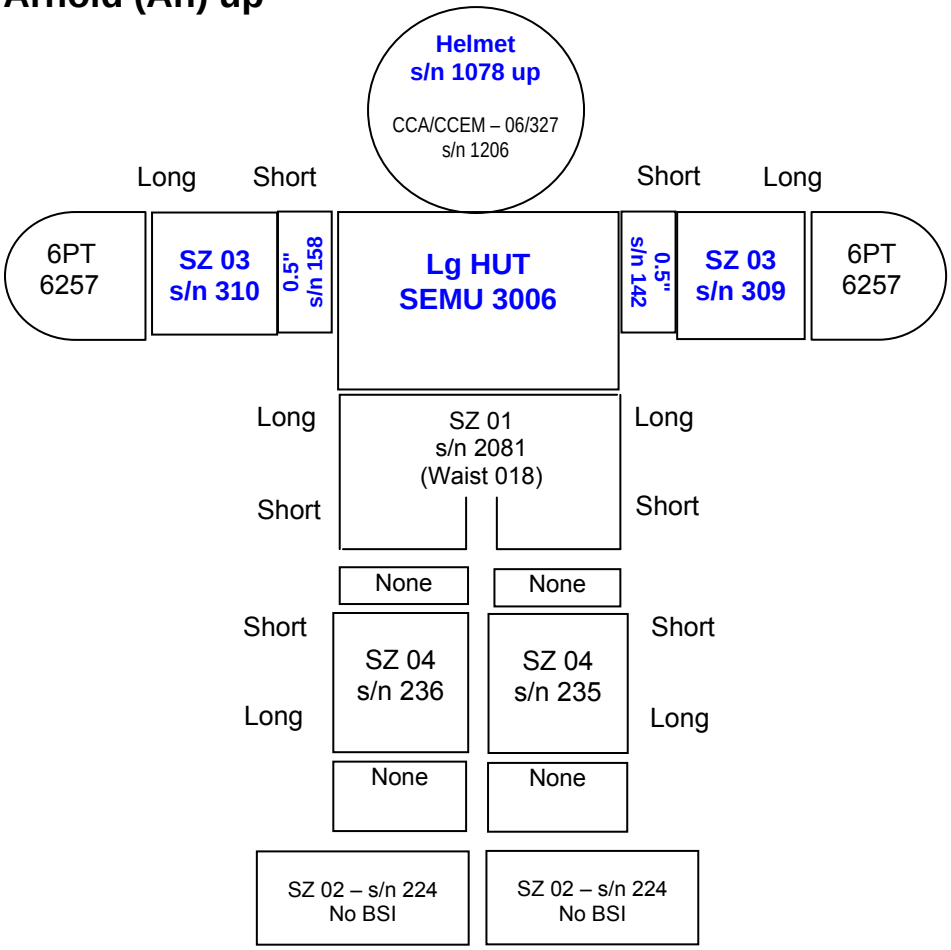

Arnold (An) down

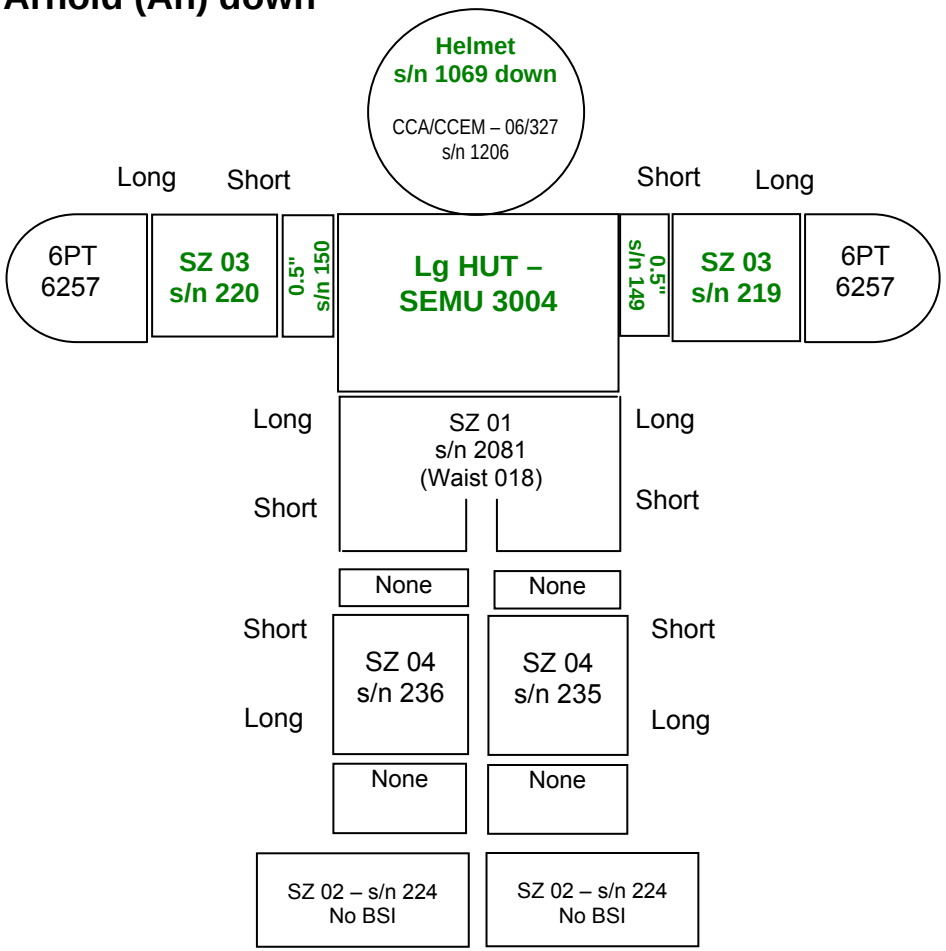

	Croakie	Fresnel Lens	Valsalva	LCVG/BLVD	MAG	TCU Top	TCU Bottom	Comfort Gloves	Socks
An	None	None	-309	06/07 Thermal Slippers	-711 (Large)	XL	XL	Thin Spectra (L)	Sock Liners (L)

Blue – Items launched on Shuttle to remain on ISS
Green – Items returning from ISS

STS-119 NOMINAL EMU SIZING (Cont)

Acaba (Ac) ISS EMU

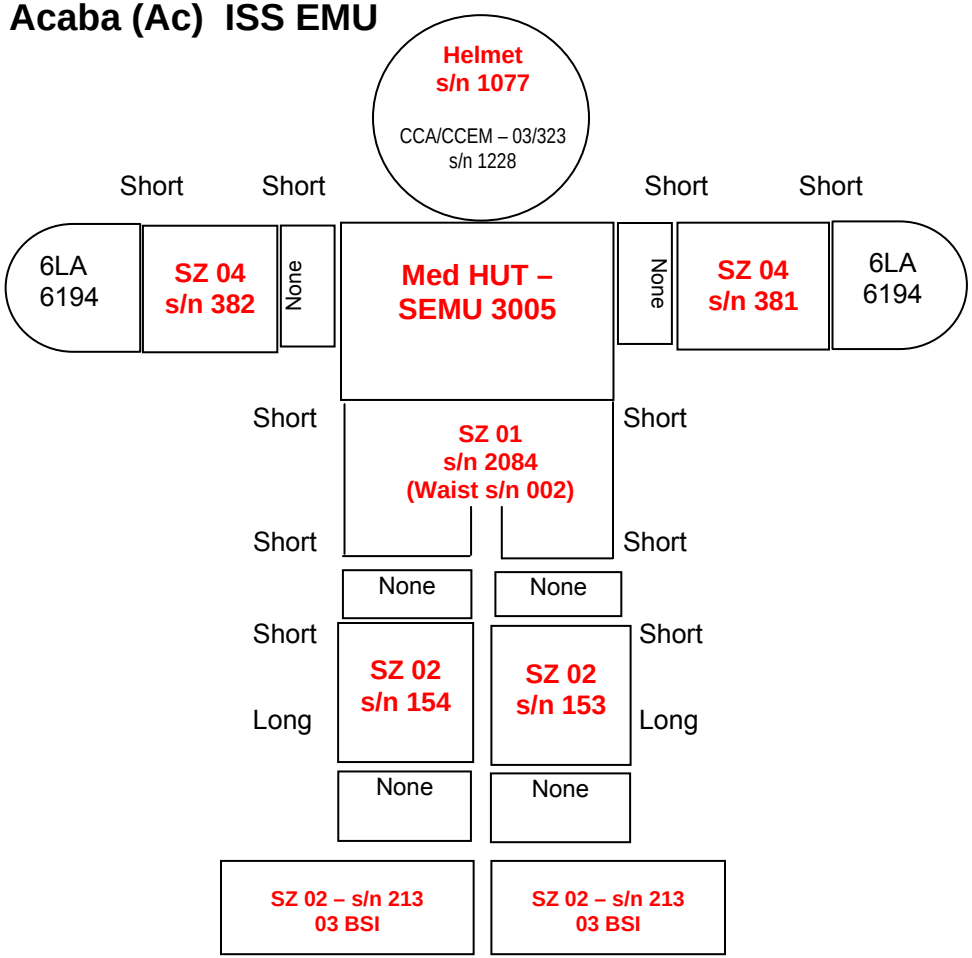

EMU 3006 Config for ISS

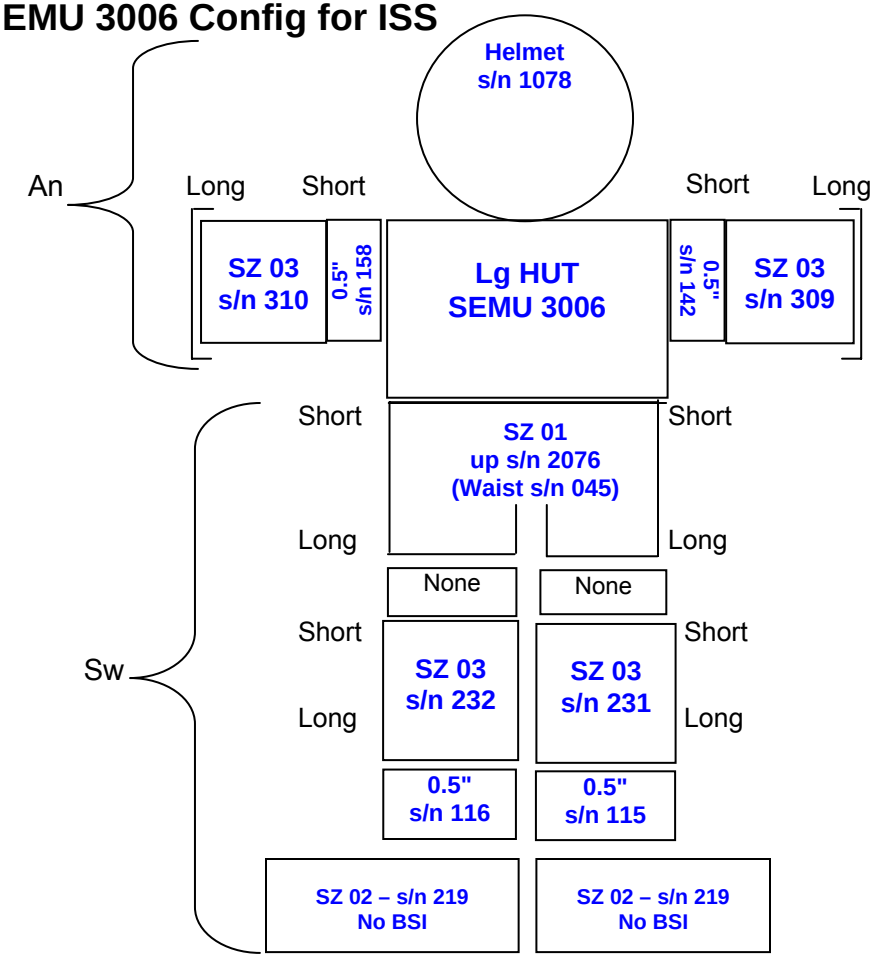

	Croakie	Fresnel Lens	Valsalva	LCVG/BLVD	MAG	TCU Top	TCU Bottom	Comfort Gloves	Socks
Ac	None	None	-309	02/04	-709 (Med)	Med	Med	Thick Spectra (M)	Tube

Blue – Items launched on Shuttle to remain on ISS
Green – Items returning from ISS
Red – ISS items to remain on ISS

EMU CONTINGENCY RESIZE MATRIX (STS-119/15A)

FOR LOSS OF:	EV1 – Swanson	EV2 – Arnold	EV3 – Acaba
HUT/PLSS	**For EVA 1 or 4**: Use EMU 3005, Medium (Ac) 1. Remove glove/arm assys 2. Use primary arms, gloves 3. √Arm red connects to right, √locks, √cams 4. Use primary LTA 5 Swap EMU PLSS identifier stripes, national flag 6. Swap helmet, comm cap, LiOH/Metox, EMU battery, REBA **For EVA 2:** Use EMU 3011, Large 1a. Follow steps 1,3-6 listed above and remove arm rings 2a. Use -02 lower arms s/n 331/332 from ISS 3a. Adjust cams to L/L for prime gloves or S/L for BU gloves	Use EMU 3011, Large 1. Remove ring/glove/arm assys 2. Use primary ring, arms, gloves 3. √Arm red connects to right, √locks, √cams 4. Use primary LTA 5. Swap EMU PLSS identifier stripes, national flag 6. Swap helmet, comm cap, LiOH/Metox, EMU battery, REBA	Use EMU 3017, Medium (Sw) 1. Remove glove/arm assys 2. Use primary arms, gloves 3. √Arm red connects to right, √locks, √cams 4. Use primary LTA 5. Swap EMU PLSS identifier stripes, national flag 6. Swap helmet, comm cap, LiOH/Metox, EMU battery, REBA
CCA	Use size 04/327 s/n 1172 Location: Sw ECOK	Use size 06/327 CCA s/n 1191 Location: on ISS (Barratt BU)	Use size 03/323 s/n 1207 Location: Airlock Floor Bag
Lower Arm Segment	Med HUT: Use size 03 arm s/n 375/376 from ISS. Cams S/L (red = right, blue = left) 1. √Locks, √cams	Use size 03 arm s/n 375/376 from ISS. Cams S/L (red = right, blue = left) 1. √Locks, √cams	Use size 04 arm s/n 347/348 from Bag C. Cams S/S (red = right, blue = left) 1. √Locks, √cams
Gloves	Back-up: Use 6PZ gloves s/n 6279 1. Adjust arm cams to S/S	Back-up: Use 6PT gloves s/n 6230 1. Adjust arm cams S/S	Back-up: Use 6LA gloves s/n 6147 1. √Arm cams S/S
Waist Brief	Use size 01 waist brief s/n 2075 (029) from ISS. Cams S/L 1. Use primary legs, leg rings, and boots 2. √Locks, √cams 3. Swap EMU brief identifier stripes	Use size 01 waist brief s/n 2075 (029) from ISS. Cams L/S 1. Use prime legs and boots 2. √Locks, √cams 3. Swap EMU brief identifier stripes	Use size 01 waist brief s/n 2075 (029) from ISS. Cams S/S 1. Use prime legs and boots 2. √Locks, √cams 3. Swap EMU brief identifier stripes
Leg Segment	Use size 03 leg from ISS s/n 185 or 186. Cams S/L 1. √Locks, √cams	Use size 04 leg from ISS s/n 212. Cams S/L 1. √Locks, √cams	Use size 02 leg from ISS s/n 152. Cams S/L 1. √Locks, √cams
Boot	Use size 02 boots s/n 214 from ISS 1. √NO BSI or Toe Cap 2. √Locks	Use size 02 boots s/n 214 from ISS 1. √NO BSI or Toe Cap 2. √Locks	Use size 02 boots s/n 214 from ISS 1. Install 03 BSI and toe cap from prime boots 2. √Locks
Sizing Rings	• 0.5" Leg: Use s/n 134 or 135 from ISS	• 0.5 arm: Use s/n 167 or 168 from ISS	• (None)
LCVG	(03) 1. Use s/n 3172 Location: Bag C 2. Transfer biomed and dosimeter	(07) 1. Use s/n 3183 Location: ISS Airlock 2. Transfer biomed and dosimeter	(03) 1. Use s/n 3172 (Sw/Ac shared BU) Location: Bag C 2. Remove thermal slipper, cut 5 tack stitches 3. Transfer biomed and dosimeter

TPS REPAIR

The TPS Repair procedures listed below are not published in the hardcopy EVA Flight Supplement. These procedures will be uplinked realtime if they are required.

A PDF and a WORD version of the procedures can be found at: http://mod.jsc.nasa.gov/do3/FDF/FDFBooks/Status%20Sheets/index.html. Select the "As Flown" Status sheet for STS-119 and the link to the procedures can be found with the link to the EVA FS. The procedures can also be found on the FDF Books CD provided to the FAO console

BOOM TPS INSPECTION
- BOOM POINT INSPECTION SUMMARY TIMELINE ..... FS 13-3
- BOOM POINT INSPECTION TOOL CONFIG ..... FS 13-4
- BOOM POINT INSPECTION ..... FS 13-5
- BOOM WLE MAPPING SUMMARY TIMELINE ..... FS 13-15
- BOOM WLE MAPPING TOOL CONFIG ..... FS 13-17
- BOOM WLE MAPPING ..... FS 13-18
- EVA WLE MAPPING INSPECTION ..... FS 13-24

BOOM CONTINGENCY
- BOOM FRGF SHAFT RELEASE ..... FS 13-29
- BOOM FRGF SHAFT INSTALLATION ..... FS 13-30
- BOOM EFGF SHAFT RELEASE ..... FS 13-32
- BOOM MPM STOW/DEPLOY ..... FS 13-34
- BOOM ASSISTED LATCHING ..... FS 13-35

TILE REPAIR
- EMU PREP FOR TPS REPAIR ..... FS 13-36
- POST TPS REPAIR DOFFING ..... FS 13-37
- EWA MATERIAL MIXING ..... FS 13-38
- EWA REF DATA ..... FS 13-39
- EWA TILE REPAIR – DOCKED/ORM SUMMARY TIMELINE ..... FS 13-40
- EWA TILE REPAIR – DOCKED/ORM TOOL CONFIG ..... FS 13-41
- EWA TILE REPAIR – DOCKED/ORM ..... FS 13-42
- SSRMS GAP FILLER REMOVAL SUMMARY TIMELINE ..... FS 13-50
- BOOM GAP FILLER REMOVAL SUMMARY TIMELINE ..... FS 13-51
- GAP FILLER REMOVAL ..... FS 13-52

RCC REPAIR
- RCC CRACK REPAIR BAG ASSEMBLY ..... FS 13-57
- TEMP SENSOR DISASSEMBLY POST-EVA ..... FS 13-60
- RCC CRACK REPAIR BAG DISASSEMBLY POST-EVA ..... FS 13-61
- TEMPERATURE PROBE ASSEMBLY ..... FS 13-63
- CRM APPLICATOR ASSEMBLY ..... FS 13-63
- CRM APPLICATOR NOZZLE INSTALLATION (DAY OF EVA) ..... FS 13-64
- RCC CRACK REPAIR ..... FS 13-65
- RCC PLUG TRANSFER BAG ASSEMBLY ..... FS 13-77

NOTES, CAUTIONS, WARNINGS
- EVA TPS INSPECTION/REPAIR INHIBIT PAD ..... FS 13-89
- TPS REPAIR CAUTIONS AND WARNINGS ..... FS 13-92
- TPS REPAIR NOTES ..... FS 13-93
- BOOM OPERATIONAL WARNINGS ..... FS 13-94
- BOOM OPERATIONAL NOTES ..... FS 13-95

TPS REF DATA
PREFERRED EMU POSITIONING FOR TPS REPAIR ..... FS 13-96
EVA TPS REACH AND ACCESS ..... FS 13-97
POINT INSPECTION REACH AND ACCESS WHILE DOCKED ..... FS 13-98
WLE MAPPING INSPECTION WHILE DOCKED ..... FS 13-100
TILE LAYUP ..... FS 13-101
85-FOOT SAFETY TETHER ..... FS 13-102
PFR ATTACHMENT DEVICE (PAD) ..... FS 13-103
WIF EXTENDER ..... FS 13-104
EVA DIGITAL CAMERA ..... FS 13-105
EVA IR CAMERA ..... FS 13-107
OVERLAY TILE REPAIR SYSTEM (OTRS) ..... FS 13-109
OTRS MARKING TEMPLATE AND INSULATION BAGS ..... FS 13-110
AUGER HOUSING ..... FS 13-111
OTRS RELEASED CONFIGURATION ..... FS 13-112
ORU BAG INSERT FOR OTRS ..... FS 13-113
BOOM REF DATA
RTF BOOM OVERVIEW ..... FS 13-114
BOOM TRANSITIONS WITH MLI ..... FS 13-115
BOOM BASE END AND MODIFIED EFGF ..... FS 13-116
BOOM BASE END EFGF ADAPTER PLATE ..... FS 13-117
EVA-ASSISTED EFGF CONNECTOR DEMATE ..... FS 13-118
BOOM BASE END SADDLE AND MPM ..... FS 13-119
BOOM MID SECTION AND MODIFIED FRGF ..... FS 13-120
BOOM MID SECTION FRGF ADAPTER PLATE ..... FS 13-121
BOOM TIP END AND SENSORS ..... FS 13-122
BOOM SENSOR DETAILS ..... FS 13-124
SENSOR PACKAGE 1 (SP1): LDRI/ITVC ..... FS 13-126
SENSOR PACKAGE 2 (SP2): LCS ..... FS 13-128
POSSIBLE PRD ROUTING FOR EVA ASSISTED LATCHING
OF BOOM IN MPMS ..... FS 13-130
BOOM CONTINGENCIES ..... FS 13-131
GRAPPLE SHAFTS ..... FS 13-132
PDGF GRAPPLE SHAFT COVER ..... FS 13-133
BOOM FRGF FSE ..... FS 13-134

15A WORKAROUNDS CRIBSHEET
EVA 1 ..... FS 16-3
EVA 2 ..... FS 16-6
EVA 3 ..... FS 16-6
EVA 4 ..... FS 16-9
GENERIC
APFR/IAPFR ..... FS 16-10
BALLSTACK ..... FS 16-10
BRT ..... FS 16-11
CANNON CONNECTOR ..... FS 16-11
EVA WRENCH (TORQUE AND RATCHET) ..... FS 16-11
FLUID QD OPS ..... FS 16-11
MUT EE ..... FS 16-14
MWS ..... FS 16-15
NZGL CONNECTORS ..... FS 16-15
PAD ..... FS 16-17
PGT ..... FS 16-17
SAFETY TETHER ..... FS 16-18
SCOOPS ..... FS 16-19
SOCKET CADDY ..... FS 16-19
TA CLAMP ..... FS 16-19
TETHER SHUTTLE ..... FS 16-19
TORQUE MULTIPLIER ..... FS 16-20
TSA (HWTSA) ..... FS 16-21
S5/S6 ATTACH
16.1a RTAS GAP CLOSURE (CORNER 1 OR 2) ..... FS 16-22
16.1b RTAS GAP CLOSURE (CORNER 3 OR 4) ..... FS 16-24
CAPTURE BAR ROTATION ..... FS 16-25
ATTACH S6 TO S5 USING CONTINGENCY FASTENERS ..... FS 16-27
PRD S5-S6 OVERVIEW ..... FS 16-30
PRD RTAS CORNER 1 (PRIMARY) ..... FS 16-31
PRD RTAS CORNER 1 (PRIMARY) NBL ..... FS 16-32
PRD RTAS CORNER 2 ..... FS 16-33
PRD RTAS CORNER 2 NBL ..... FS 16-34
PRD RTAS CORNER 3 ..... FS 16-35
PRD RTAS CORNER 3 NBL (STRAP ROUTING) ..... FS 16-36
PRD RTAS CORNER 3 NBL ..... FS 16-38
PRD RTAS CORNER 4 (PRIMARY) ..... FS 16-39
PRD RTAS CORNER 4 (PRIMARY) NBL ..... FS 16-40
PRD RTAS CORNER 4 (PRIMARY) (STRAP ROUTING) ..... FS 16-41
PVR
S6 RADIATOR MANUAL OVERRIDE TO DEPLOY/RETRACT ..... FS 16-43
SAW
PRD 4-BAR ROUTING ..... FS 16-48
MANUAL OVERRIDE TO DISENGAGE BETA GIMBAL ANTI-ROTATION LATCH ..... FS 16-52
BMRRM ANTI-ROTATION LATCH TABLE ..... FS 16-53
MANUAL RELEASE OF SABB RESTRAINT PINS ..... FS 16-54
MANUAL OVERRIDE TO UNLATCH/LATCH (TENSION) SABB ..... FS 16-57
MANUAL OVERRIDE TO EXTEND/RETRACT MAST ..... FS 16-59
ASSISTED SOLAR ARRAY DEPLOY/RETRACT ..... FS 16-62
SABB SPOOL RE-TENSION ..... FS 16-68
MANUAL SAW JETTISON ..... FS 16-74

TIE-DOWN PLAN
GAP CHECK TOOL TIE-DOWN ..... FS 16-80
SABB LAUNCH RESTRAINT TIE-DOWN ..... FS 16-81
UCCAS/PAS TIE-DOWN ..... FS 16-82
RPCM TIE-DOWN..... FS 16-84
WETA/DUMMY BOX TIE-DOWN..... FS 16-85
MISC
BMRRM REMOVE/REPLACE ..... FS 16-89
DCSU REMOVE AND REPLACE ..... FS 16-94
DDCU REMOVE AND REPLACE..... FS 16-99
DLA REMOVE AND REPLACE ..... FS 16-104
MBSU REMOVE/REPLACE..... FS 16-112
RJMC REMOVE AND REPLACE ..... FS 16-119
SSRMS JOINT DRIVE ..... FS 16-120
SARJ – TBA REMOVE/INSTALL..... FS 16-124
BCDU REMOVE/REPLACE..... FS 16-130
GENERIC EVA INHIBIT PAD..... FS 16-139
GENERIC NOTES, CAUTIONS, & WARNINGS..... FS 16-144

EVA 1

S6 INSTALL ON S5

A. Pre-install inspection of S6 corners show that primary and/or contingency ball/nuts are not centered	When within reach, center ball/nut with gloved hand and report to **MCC-H**
B. Pre-install inspection of S5 corners 1, 2, 3 or 4 shows exposed threads on primary RTAS bolt	1. Attempt to retract bolt tip to flush using gloved hand 2. If no joy, **PGT: B1, CCW2**
C. S5 CLA will not engage	1. If limits out prior to capture bar contact, increase settings to **A7, CW2** for 5 turns max, then back down to **A6, CW2** (Do not make contact w/capture bar at A7) 2. If PGT torques out mid-travel, contact **MCC-H** 3. Refer to PRD RTAS for affected corner. Install PRDs on Corners 1 and 4 Verify: CMG control, desat request inhibited, SSRMS: Brakes on for PRD routing and in Limp mode for PRD ratcheting. EV1 and EV2 ratchet both PRDs simultaneously, verify SSRMS in good config after each ratchet throw. NOTE: Do not attach PRD to HR, use ISS structure only
D. S5/S6 gap check fails on one corner	1. Verify gap is being checked in correct location (at ground strap installation location) 2. For corners 1 and 2 only, remove gap check tool (on corner 1) with **PGT settings: A6, CCW2**; 12-14 turns, check gap 3. If gap reading less than 0.6 line (shoulder of the tool), GO to press with nominal procedure 4. If tool hits at shoulder (reading greater than .6) for Corner 1 or 2, refer to 16.1a RTAS GAP CLOSURE 5. If tool hits at shoulder (reading greater than .6) on Corner 3 or 4, then proceed with Corner 1 and 2 install to initial torque **PGT: B7, CW2**; ~27 turns to HS 6. Perform gap check at Corners 3 and 4. If gap reading less than 0.6 line (shoulder of the tool), GO to press with nominal initial torque of Corners 3 and 4 7. If tool hits at shoulder (reading greater than .6) for Corner 3 or 4, refer to 16.1b RTAS GAP CLOSURE
E. S5/S6 gap check fails on more than one corner	Contact **MCC-H** (will consider releasing CLA and backing S6 off)
F. For any of the following S5 Primary Bolt contingencies: a. Does not achieve full torque b. Bolt shoulder has a gap (is not seated against nut)	Refer to ATTACH S6 TO S5 USING CONTINGENCY FASTENERS
G. Primary bolt free spins and does not advance into S6 nut (PGT does not "see" torque) (possible broken self-feeding nut)	If bolt free spins, push S5 bolt axially toward S6 while driving PGT until bolt threads begin to engage S6 nut (under load)
H. S5 gap check tool will not release from outboard corner 1	1. Check worksite for FOD 2. If bolt did not turn, increase PGT setting to **B7, CCW2** drive 1 turn only, then return to original **PGT setting: A6, CCW2** 3. Retrieve gap check tool from inboard corner 1
I. Once release from S6, Fairchild fastener on ground strap is missing washer	If positive control on bolt, press with install
J. S6 ground strap cross threads during install onto S5 lug	1. Ensure EV crew begins installation manually 2. Back-off thread engagement and re-attempt

K. S6 ground strap will not seat properly onto S5 lug (ground strap is not flush to surface or PGT stalls)	1. Check ground strap alignment 2. Increase **PGT** torque setting to **B1, CW2**

S5 TO S6 ELECTRICAL CONNECTORS

A. Cable fails to release from S5	1. Check for FOD, damage or misalignment 2. Verify cable routing not impeding connector rotation 3. Use cannon connector tool for more leverage 4. Verify P260 demated from S5 and mated to S6 prior to P259
B. Connector/Cap fails to softdock	1. Verify collar unlocked – white on connector shell tip should align with white on receptacle backplate 2. Check for FOD or damage
C. Connector/Cap fails to lock	1. Remove connector/cap, check for FOD or damage 2. Check alignment, remate, rock connectors back and forth as required (once locked, white on connector shell tip should align with black on receptacle backplate) 3. Use cannon connector tool for more leverage (NOTE: Can only use tool for part of the throw on P260 due to strut interference)
D. High cable stiffness prevents mating	1. Verify all necessary TA clamps are released 2. Use two crewmembers/APFR
E. Connector/jack pin bent	1. Report bent pin location to **MCC-H** 2. On **MCC-H** GO: Retrieve pin straightener from ISS A/L, Staging Bag; straighten pins
F. Connector/jack FOD	On **MCC-H** GO: Obtain Connector Cleaner Tool from ISS A/L, Staging Bag to remove FOD
G. Connector EMI band bent	On **MCC-H** GO: Obtain Needle Nose Pliers or Forceps to remove band

SABB LAUNCH RESTRAINT

A. SABB launch restraint will not release	1. **PGT[RCCW,** MTL **30.5] RD TM w/5/8" PRD:** Apply manual torque to fastener 2. **3/8-in Drive Ratchet – RD TM w/5/8" PRD:** Apply ccw manual torque to fastener

S6 RADIATOR

A. Unable to break torque on cinch bolt	1. Verify PGT socket is fully installed on bolt (depressing anti-rotation feature) 2. Take PGT to manual **RCCW, 30.5**. Break torque then resume release with **PGT settings: B7, CCW2**, 30.5 3. If no joy, retrieve ratchet wrench from crewlock bag and re-attempt to break torque then resume release with **PGT settings: B7, CCW2**, 30.5 4. If issue due to radiator expansion, ask for EV2's assistance to compress radiator
B. Unable to release cinch bolt after torque broken	1. If issue due to radiator expansion, attempt to compress radiator solo 2. Verify bolt released full amount of turns (~14) 3. If single person compression not enough, ask for EV2's assistance to compress radiator
C. Cinch fails to stow in cinch clip	Wire tie cinch to adjacent handrail, verify not in radiator deployment envelope
D. PIP pin fails to release	Attach equipment tether hook to PIP pin loop to provide more leverage
E. Winch bar interferes with radiator deploy	Use adjustable tether or wire tie to secure winch bar out of deployment envelope

ROTATE IEA KEEL PIN

A. IEA Keel Pin fastener will not release	1. **PGT[RCCW, MTL 30.5]-6 ext 7/16** Apply torque 2. **PGT[RCCW, MTL 30.5]-SQ TM w/7/16 PRD:** Apply torque 1 turn 3. On MCC GO, WARNING Sharp edge hazard, bolts have exposed threads Remove keel pin nut plate: a. **PGT[B1 12 ft-lb, CCW1 10 RPM]-6 ext 7/16** b. Release non-captive fasteners (2) and stow in trash bag c. Unfasten hex nut with adjustable wrench and stow in trash d. Translate to inboard side of keel housing and remove keel pin fastener e. If jammed, use hammer to drive bolt out
B. IEA Keel Pin will not stay in hard dock	Attach adj equip tether between narrow rod on IEA keel pin nut plate and S6 HR #2067 stand-off. Tether can be retrieved and keel pin put back in launch position after BGA restraint bolt release and 4-bar deploy

RELEASE BGA RESTRAINTS

A. Beta Gimbal launch restraint will not release	1. **3/8-in Drive Ratchet with 5/8**: Apply ccw manual torque to fastener 2. **3/8-in Drive Ratchet – RD TM with 5/8:** Apply ccw manual torque to fastener
B. 4-bar linkage does not deploy to the locked position	1. Push on 4-bar linkage until latches engage 2. If required, install PRD between IEA and Beta Gimbal Assembly structure. Ratchet PRD to pull 4-bar into locked position. NOTE: Do not attach PRD to HR, use ISS structure only

SAW

A. SABB strut locking sleeve does not engage after SABB unstow	1. Insert SABB PIP pin when the Pivot Locking Mechanism is in BOX UNSTOWED position. Apply manual force to engage locking sleeve over joint 2. If locking sleeve is reset to the STOW position, cycle SABB to LAUNCH position and then back to the UNSTOW position 3. Install Locking Strut Aid
B. Mast Tip Fittings will not release	1. On MCC GO**, PGT[B7 25.5 ft-lb, CCW2 30 RPM,** MTL 30.5**]-6 ext 7/16**: Apply torque 1 turn, report release torque to MCC 2. If free spinning nut plate: a. Retrieve vise grips b. Attach vise grips to nut plate c. Turn bolt while restraining nut plate

IEA MMOD SHIELD

A. Bolt fails to release	1. **PGT[RCCW, MTL 30.5]-6 ext 7/16**: Break torque 2. **Ratchet Wrench-6 ext 7/16**: Break torque

EVA 2

P6 BATTERY PREP

A. APFR	See APFR section of GENERIC cribsheet
B. WIF Inspect: If WIF plate and fasteners fail initial inspection	1. Use **PGT [A1 CW2 30 RPM]-6 ext 7/16**: to torque down bolt 2. Re-inspect WIF plate NOTE: Although WIF plate bolt height is not to EVA requirements, attempt bolt tightening

PAS/UCCAS DEPLOY

A. Deploy/Stow clevis bracket bolt fails to break torque	1. Use PGT in manual ratchet mode [**RCCW, 30.5 MTL**] 2. Retrieve torque wrench from A/L staging bag. Set to **41 ft-lb** and reattempt release
B. ADP does not release after loosening clevis bolts	Retrieve hammer from staging bag and with ADP in full open position, tap it in farther. Reattempt removal
C. Yoke PIP pin does not release after loosening clevis bolts	Retrieve hammer from staging bag and tap out PIP pin
D. SARJ launch bolt fails to break torque	Increase to **PGT [B7 25.5 ft-lb, CCW2 30 RPM**, 30.5**]** for 1 turn, then return to original setting
E. Cup-cone bolt fails to break torque	Increase to **PGT [B7 25.5 ft-lb, CCW2 30 RPM**, 30.5**]**. (Do not go to hard stop at this setting)
F. Strut cone cannot be removed from cup interface	1. Inspect for clearance between cup and cone, if reqd, **PGT[A7 9.2 ft-lb, CCW2 30 RPM]-6 ext 7/16:** Release bolt to hardstop 2. Wiggle brace (worked during VITT deploys) 3. Retrieve hammer and tap brace
G. Clevis bracket bolt fails to achieve full torque and turns	Back out the bolts fully and reattempt installation
H. Yoke PIP pin does not install	1. Open handle of Yoke ADP and reattempt installation. If joy, close ADP handle 2. If no joy, manipulate yoke to align PIP pin holes. If joy, close ADP handle

P1/P3 FLUID JUMPER

A. Fluid QDs	See Fluid QD section of GENERIC cribsheet

P1 FHRC P-CLAMPS

A. P-Clamp does not release	Increase to **PGT [B1 12.0 ft-lb, CCW2 30 RPM**, 30.5**]** for 1 turn, then return to original setting

EVA 3

CETA CART

A. Wheel bogie fails to release from truss	1. Verify brakes are fully released 2. Ensure trigger is being depressed while attempting to rotate handle 3. On **MCC-H** GO: Perform {6.100.125 CETA CART WHEEL BOGIE REMOVE AND REPLACE} (SODF: EVA TASK: CONTINTENCY TASKS) – There is no spare wheel bogie on-orbit, so after the CETA cart is relocated the failed wheel bogie will be reinstalled
B. Wheel bogie fails to install on truss	There is no spare wheel bogie on-orbit. 3 of 4 bogies are required. Real time call on whether MT couple or CETA cart tiedown required. For CETA cart tie down see block G. For wheel bogie tie up: 1. Use Adj tether to restrain the wheel bogie so that it is rotated ≥ 25° from rail 2. Rotate handle perpendicular to rail (locked position)

15A WORKAROUNDS CRIBSHEET (Cont)

C. Parking brake fails to engage	1. Use parking brake handle on other side of CETA cart 2. Couple CETA cart to MT and utilize other WIF if possible
D. Parking brake fails to disengage	1. Hold pedal down for brake release 2. Use pedal on other side of CETA cart to release parking brake
E. Dynamic brake fails to engage	Limit translation rates to allow manual stopping
F. CETA active coupler fails to capture or lock	1. Cycle active coupler 2. Swap active coupler from MT with failed active coupler on CETA Cart 3. On **MCC-H** GO: Tie down CETA cart. See block G
G. CETA cart tiedown	On **MCC-H** GO: Perform the following tiedown procedure (see figure) a. Translate CETA cart to P3/S3 location (not over truss segment joint) b. Engage parking brake c. Retrieve 2 Long Duration TieDown (LDTD) tethers from Airlock Staging Bag or P6 AUX Bag (fwd face of Z1) d. Route 1 LDTD tether on stbd side of CETA cart as follows: (1) Attach 1 hook to zenith brake handle support tether point (2) Loop tether strap around CETA rail HR standoff (3) Attach second hook to nadir brake handle support tether point (4) Lightly cinch tether and close buckle (5) Close MLI flap over buckle and any excess strap e. Repeat on port side of CETA cart
H. Coupler knob fails to unlock	1. On **MCC-H** GO: Release active coupler by removing wireties (2) (reinstall of wireties not required) and PIP pins (2) 2. On **MCC-H** GO: Release passive coupler via EVA bolt: **PGT: [B7 (25.5), CCW2**, 30.5**], 7/16-6-ext** 9 turns – Bolt is attached by lanyard

15A WORKAROUNDS CRIBSHEET (Cont)

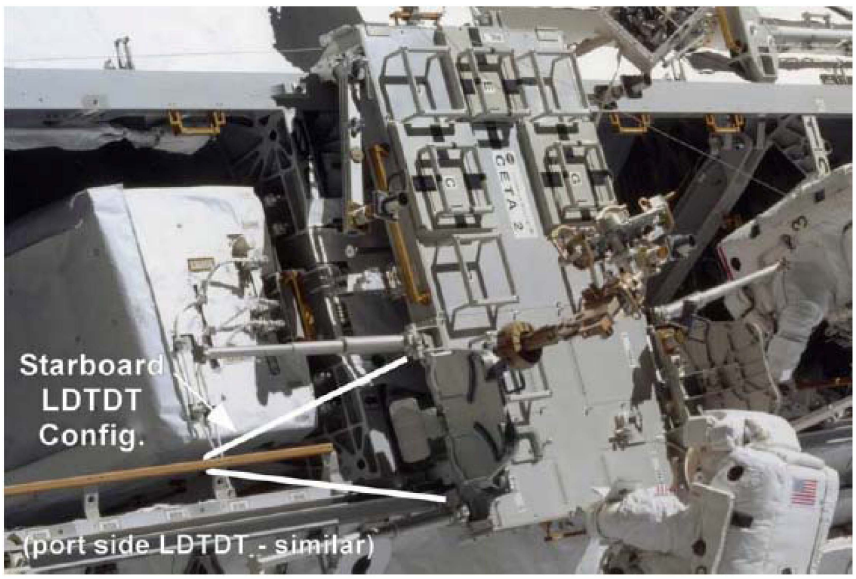

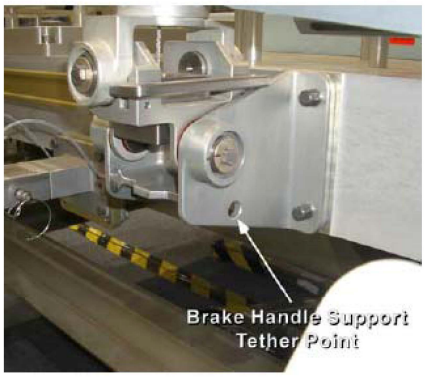

RPCM R&R

A. RPCM jacking bolt will not release	1. Verify socket is fully installed on the bolt (releases the anti-rotation locking tangs) 2. Increase **PGT setting to: B1, CCW2, 30.5**
B. Spare RPCM did not achieve full turns (6 turns)	1. Verify RET hook installed correctly 2. Remove RPCM with **PGT settings: A7, CCW2**, 30.5, verify no FOD 3. Reattempt installation with **PGT settings: A2, CW2**, 30.5 4. If no joy, contact **MCC-H**
C. Status indicator did not travel to LOCK	As long as torque and turns achieved, no action – press with next task

EVA 4

JLP GPS ANTENNA

A. OIWIF cannot be locked on dovetail	1. Check for FOD and structural interference 2. Cycle soft dock pins and reattempt installation 3. Verify WIF is co-planar with dovetail 4. Tie down GPS antenna to HR 1268 with long duration tie-down tether 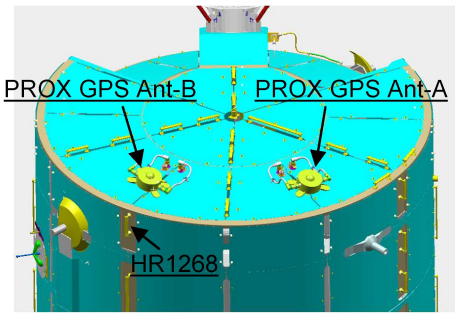
B. Taping patch came off from antenna bracket 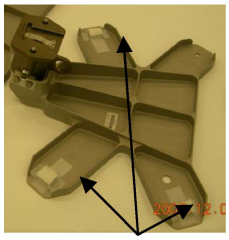 Taping patch (3pl) 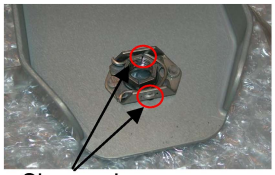 Sharp edge	WARNING Do not touch nut retainer on the backside of antenna bracket (sharp edge) 1. Inspect gloves 2. Check the backside of antenna bracket and report the location where taping patch is lost to **MCC-H** 3. Continue the antenna installation without touching the sharp edge 4. Stow the taping patch in small trash bag if possible
C. Connector cap fails to demate	See NZGL section of GENERIC cribsheet
D. Connector fails to mate	See NZGL section of GENERIC cribsheet
E. Connector MLI peeled off from JLP due to MLI torn away from fastener	1. No action required if MLI can stay on JLP with Velcro only 2. After connector cable is installed, tie down the MLI to connector cable with wire tie

Z1 PATCH PANEL

A. NZGL Connectors	See NZGL section of GENERIC cribsheet

S1/P1 RADIATOR IMAGERY

A. APFR	See APFR section of GENERIC cribsheet

15A WORKAROUNDS CRIBSHEET (Cont)

WETA INSTALL

A. Dummy box outer bolt does not release	Increase to **PGT [B7 25.5 ft-lb, CCW2 30 RPM,** 30.5**]** for 1 turn, then return to original setting
B. Dummy box center bolt does not release	1. Ensure outer bolts (2) are fully released 2. Increase to **PGT [B7 25.5 ft-lb, CCW2 30 RPM,** 30.5**]** for 1 turn, then return to original setting
C. WETA center bolt does not engage	Remove WETA; inspect stanchion interface for FOD or damage; reattempt installation
D. WETA center bolt does achieve minimum turn count (24 turns)	Increase to **PGT [B1 12 ft-lb, CCW2 30 RPM,** 30.5**]**
E. WETA outer bolt does not engage	1. Engage opposite outer bolt; reattempt installation of failed bolt 2. Increase to **PGT [B1 12 ft-lb, CCW2 30 RPM,** 30.5**]**

S3 PAS DEPLOYS

A. PAS	See PAS section of EVA 2 cribsheet

GENERIC

APFR/IAPFR

A. APFR/IAPFR fails to install into WIF	1. Verify APFR collar in install position (black-on-black) 2. Check for FOD in WIF or structural interference 3. Attempt APFR install in alternate clocking 4. If no joy, attempt APFR install in alternate WIF 5. If no joy, APFR failure; use another APFR
B. Joint fails to actuate	1. Verify no load is applied to joint and/or jiggle APFR joint while actuating knob For pitch joint, push knob in during rotation (Class I pitch joints known to be stiff) 2. Increase force applied in order to free joint
C. Boot becomes stuck in APFR boot plate	1. Have other EV crewmember assist with getting boot out 2. Loosen 7/16-in EVA bolts (3) on heel clip using EVA ratchet or PGT: **PGT: [B1 (12.0), CCW2, 30.5] 7/16-6-ext** 3. Remove 7/16-in EVA bolts (3 – captive) on heel clip (non captive) using EVA ratchet or PGT: **PGT: [B1 (12.0), CCW2, 30.5] 7/16-6-ext** 5 turns
D. Boot becomes stuck in IAPFR boot plate	1. Have other EV crewmember assist with getting boot out 2. If wearing Small EMU boot, have other EV crewmember adjust boot sizing to Large 3. Loosen 7/16-in EVA bolts (2) on heel clip using EVA ratchet or PGT: **PGT: [B2 (16.0), CCW2, 30.5] 7/16-6-ext** 4. Remove 7/16-in EVA bolts (2) on heel clip using EVA ratchet or PGT: **PGT: [B2 (16.0), CCW2, 30.5] 7/16-6-ext** 4 turns

BALLSTACK

A. ECOM fails to release from ISS Structure	On **MCC-H** GO: Tether ballstack to handrail and leave outside
B. ECOM fails to release from MUT EE	Leave together and return inside
C. Ballstack fails to rigidize	On **MCC-H** GO: Use secondary tethers to assist in restraining payload

15A WORKAROUNDS CRIBSHEET (Cont)

BRT

A. BRT jaws fail to release	1. Loosen rigidizing collar to relieve sideloads 2. Shake BRT while depressing paddles to alleviate sideloads from handrail 3. Detach BRT from suit and tether to structure

CANNON CONNECTOR

A. Connector fails to release	1. Check for FOD, damage or misalignment 2. Verify cable routing is not impeding connector rotation. (Release TA-clamps as required) 3. Use cannon connector tool for more leverage
B. Connector/Cap fails to softdock	1. Verify collar unlocked (White on connector shell tip should align with white on receptacle backplate) 2. Check for FOD or damage
C. Connector/Cap fails to lock	1. Remove connector/cap, check for FOD or damage 2. Check alignment, remate, rock connector back and forth as required. (Once locked, white on connector shell tip should align with black on receptacle backplate) 3. Use cannon connector tool for more leverage
D. High cable stiffness prevents mating	1. Verify all TA-clamps are released 2. Use second crewmember 3. Use APFR
E. Connector/Jack pin bent	1. Describe pin location and condition; obtain WVS view of interface if possible 2. On **MCC-H** GO: For 16, 20, or 22 gauge pins only, retrieve pin straightener and attempt pin repair 3. On **MCC-H** GO: Retrieve needle nose pliers and attempt pin repair **MCC-H** will verify pin size prior to retrieving tools
F. Connector/Jack FOD	On **MCC-H** GO: Obtain connector cleaner tool to remove FOD
G. Connector EMI band bent	On **MCC-H** GO: Obtain needle nose pliers or forceps to remove band

EVA WRENCH (TORQUE AND RATCHET)

A. Ratchet teeth slip	Ratchet to new set of teeth and reapply torque
B. Wrench does not ratchet	Hold the ratchet selector and socket in opposite hands and rotate in opposite directions

FLUID QD OPS – MATING OPS

NOTE

If troubleshooting requires the crew to leave the worksite, verify that female QDs are covered to prevent exposure to direct sunlight. For thermal clocks refer to flight rules

A. QD fails to mate	1. Check for debris, damage, or crystals 2. Verify release ring is retracted. (Fwd white band is not visible) 3. Check alignment and verify no side loads
B. Release ring snap back test fails	1. Push release ring forward. (Release ring will not slide fwd if QD is in FID) 2. QD is in FID; demate QD, verify fwd white band not visible, and remate QD
C. Gap check fails (visual or FID gauge)	Retract release ring, demate QD, verify fwd white band not visible, and remate QD

FLUID QD OPS – VALVE OPS

A. Detent button is partially unthreaded	Rethread detent button a. Load bail handle (button will free spin if not loaded) – If valve is open, pull bail handle aft – If valve is closed, push bail handle fwd b. Rotate button CW (8 turns max)
B. Detent button is missing NOTE Detent button is only required for BDT ops and 1 in SPD ops	1. Use equipment hook to depress detent button shaft 2. Use tether strap around gloved finger to depress detent button shaft 3. Retrieve and use Beta Gimbal Antirotation Latch Tool to depress detent button shaft
C. Bail fails to travel fwd	Check for debris, damage, or crystals
D. Bail fails to travel to full fwd (valve open) position (button does not pop up)	1. Neutralize sideloads 2. Apply greater opening force to QD bail handle
E. Detent button fails to depress during valve closing WARNING Bail may kick back and contact crew when button is depressed if a leaking primary seal allowed pressure build-up in spring cavity	1. Push and hold bail handle fwd (to open) with significant force to relieve load on button while simultaneously depressing the detent button – If button depresses, vent by pulling bail aft until release ring covers aft white band – Push bail fwd to valve open and check button depresses 2. On **MCC-H** GO: Retrieve and install QD button depress tool (BDT)
F. Bail fails to travel to full aft (valve closed) position (button does not pop up)	1. Inspect QD for retaining wire protrusion 2. Neutralize possible side loading 3. Depress button and increase force on bail

FLUID QD OPS – DEMATING OPS

A. Female QD fails to demate	1. Verify release ring is fully retracted while attempting to demate 2. Verify TA or P clamps are released 3. Verify detent button is up 4. Neutralize sideloads or manipulate flexhose to relieve mating forces on female QD 5. Apply greater force to release ring and female QD
B. Thermal bootie fails to remain securely closed	Install wire tie around bootie to keep QD fully covered
C. Cap will not demate	1. Verify pulling out on cap before rotating to ensure locking tab is disengaged 2. Wait for day pass if possible and reattempt cap removal 3. If force is too great for hand actuation or crystals visible around the QD, male may be leaking; notify **MCC-H** – Prepare for quick mate on **MCC-H** GO 4. Retrieve QD cap tool (either QD Bag on Airlock) – Use QD cap tool to turn stuck cap a maximum of 2 turns (cap vents at ~ 2 turns). Finish removal of cap by hand (~ 1 additional turn)

FLUID QD OPS – LEAKS

A. Mated QD leaks in valve open position (bail fwd)	Close valve (bail aft)
B. Male QD leaks after cap removal	Reinstall cap; notify **MCC-H** – Prepare for quick QD mate on **MCC-H** GO
C. Female QD leaks during or after bail actuation to fwd position (valve open)	1. Return bail to aft position (valve closed) 2. Perform release ring snap back test – If FID is observed, demate and remate QD – If no FID, neutralize sideloads and push bail to fwd position (valve open)
D. Female QD leaks after demate	Fully mate to destination male as quickly as possible
E. Male QD leaks after demate (male sleeve may be visibly stuck open)	1. Remate female QD and cycle QD valve a. Depress button and use significant force to push bail forward; release button (valve open) b. With QD in open position (bail fwd) apply significant force to aft end of the female QD in back and forth, up and down directions c. Depress button and pull bail aft; release button (valve close) d. Demate QD and inspect 2. If applicable, close valve of appropriate QD in flowpath, verify detent button is up, and fwd white line is visible 3. Install cap
F. Leak detected by **MCC-H** after valve ops to close position (possible male sleeve stuck open)	1. Cycle QD valve a. Depress button and use significant force to push bail forward; release button (valve open) b. With QD in valve open (bail fwd) position apply significant force to aft end of the female QD in back and forth, up and down directions c. Depress button and pull bail aft; release button (valve close) d. Demate QD and inspect 2. If applicable, close valve of appropriate QD in flowpath, verify detent button is up, and fwd white line is visible
G. Frozen NH3 present on female or male QD	1. Leave QD exposed to vacuum; wait maximum of 5 min for sublimation (check periodically) 2. On **MCC-H** GO: Continue QD ops

FLUID QD OPS – QD BLOCKS

MATE QD

1. Remove QD caps as required
2. Inspect male and female QD for debris or damage
3. Verify female QD ready to mate
   - √Detent button – up
   - √Fwd white band – not visible
4. Assess side load potential prior to mate
5. Mate QD
   - √Fwd white band – visible
6. Perform snapback test
   - √Fwd white band visible
7. Perform pull test (Stay clear of button and release ring)
8. Perform visual gap test
   - √For FID

OPEN VALVE

1. Assess side loads
2. Depress detent button
3. Push bail to forward position
4. √Aft white band visible
5. √Detent button – up

CLOSE VALVE, DEMATE QD

1. √Aft white band visible
2. √Detent button fully installed
3. √Detent button up
4. √Detent button can be depressed
5. Assess side loads prior to bail movement
6. Push bail toward open position with significant force while depressing detent button (unstick male sleeve seals)
7. Depress detent button, move bail aft (close valve)
8. √Fwd white band visible
9. √Detent button up
10. Assess side loads prior to demate
11. Pull back on release ring and demate QD
12. √Release ring – retracted (FWD white band not visible)
13. Inspect male and female QD for debris, damage, or anomalous conditions (ammonia crystals)
14. Install QD caps as required; verify lock tab engaged

MUT EE

A. MUT EE jaws fail to release	1. Verify locking collar fully released 2. Shake MUT EE while depressing paddles to alleviate sideloads from handrail 3. Release MUT EE ECOM socket and tether MUT EE to structure

15A WORKAROUNDS CRIBSHEET (Cont)

MWS

A. MWS EE is sticky	Known problem. Report degree of stickiness to **MCC-H** and any noted correlation with thermal environment. Post EVA, report s/n of affected unit (s/n located on "stem" of T-bar)
B. MWS EE cord fails to retract	1. Verify MWS EE tether lock in unlock position 2. Cycle MWS EE tether lock 3. Check tether reel opening for FOD 4. Pull out small amount of tether and allow reel to retract while holding light tension on the tether
C. MWS T-bar fails to pivot	1. Check sideloads on T-bar while depressing button 2. Slip T-bar clutch (40-60 lb force required)

NZGL CONNECTORS

A. Bail bar fails to slide over-center	1. Inspect bail for FOD 2. Inspect bail linkage for damage and report to **MCC-H** 3. Check alignment and sideloads 4. Verify sufficient TA-clamps are open 5. Increase force on bail 6. Attach 2 hooks from adj tether to connector bail and use adj strap to pull bail into demated position 7. On **MCC-H** GO: Retrieve vise grips to help increase force on bail
B. Backshell fails to slide (after over-center mechanism has been overcome)	1. Verify sufficient TA-clamps are open 2. Check for cable harness and hardware interference 3. Check alignment and sideloads 4. Inspect bail and connector for FOD 5. Inspect bail linkage for damage and report to **MCC-H** 6. Wiggle/jiggle connector while pushing or pulling on backshell 7. Attach 2 hooks from adj tether to connector bail and use adj strap to pull bail into demated position 8. On **MCC-H** GO: Retrieve vise grips to help increase force on bail
C. Connector fails to release from soft dock	1. Verify bail fully thrown, undamaged, and backshell fully aft 2. If backshell springs forward, pull and hold in fully aft position (will have to overcome spring force, approx 5-10 lb) while attempting to demate connector 3. Verify sufficient TA-clamps are open 4. Check for cable harness and hardware interference 5. Check alignment and sideloads 6. Relieve compression on connector interface due to cable loads by pulling backshell away from jack 7. Push the plug towards the jack to compress the soft dock 8. Wiggle/jiggle connector. (Use slight rolling motion)
D. Connector fails to soft dock	1. Verify correct plug and jack 2. Verify bail fully aft 3. Verify backshell fully aft and remains fully aft. If backshell not fully aft, pull and hold in fully aft position while attempting to soft dock connector 4. Inspect the following: – O-ring seal – FOD – Bend radius – Soft dock springs – Connector keying feature 5. Verify alignment (avoid excessive rolling or rocking the plug as this could unseat soft dock springs) – Connector should snap into soft dock with little force once half shells are aligned

E. Connector fails to mate	1. Verify half-shells are fully seated on both sides 2. Verify cable and backshell free to move (no clamps) 3. Push forward on connector backshell while actuating bail 4. Detach from soft dock and inspect: – Pins – FOD – EMI band – Bend radius – TA clamps – P clamps – Bail linkages and rivets – Soft dock springs – O-ring seal and main joint gasket – Connector keying feature 5. Cycle bail while disconnected (push forward on connector backshell for additional leverage)
F. Connector pin bent	1. Rotate connector to bail up position and describe pin location and condition – Obtain WVS view of interface if possible 2. On **MCC-H** GO: For 16, 20, or 22 gauge pins only, retrieve pin straightener and attempt pin repair 3. On **MCC-H** GO: Retrieve needle nose pliers and attempt pin repair – **MCC-H** will verify pin size prior to retrieving tools 4. Inspect plug and jack prior to re-mating
G. Connector FOD	1. On **MCC-H** GO: Retrieve connector cleaner tool <u>NOTE</u> One N2 cartridge is already captured in the tool (the other is lanyarded inside the caddy). In order to puncture the cartridge, it must be threaded into the tool until the indicator line passes out of sight under the collar of the tool. Puncture connector cleaner cartridge only when ready to perform actual cleaning. Use entire N2 cartridge prior to reentering airlock 2. Attempt cleaning
H. Connector EMI band bent	On **MCC-H** GO: Retrieve needle nose pliers or forceps to remove band – Bail may need to be pushed forward while demated to expose EMI band for removal
I. Connector bail linkage failure	1. On **MCC-H** GO: Re-attempt connector mate/demate with broken bail – Impart load through undamaged side of bail linkage – Assist bail motion with hand on backshell once bail linkage has passed over-center – May take multiple pushes on the bail to mate/demate connector 2. Tether hook or vise grips may be used for additional leverage
J. Connector soft dock spring bent	On **MCC-H** GO: Retrieve needle nose pliers and remove bent spring

K. Connector O-ring or main joint gasket seal loose (seal and O-ring required in 1-G only)	1. Remove seal with tether hook 2. On **MCC-H** GO: Retrieve additional tools to remove seal (i.e., wire tie, needle nose pliers, probe, loop pin puller)
L. Connector cap (twist) will not release	1. Increase force 2. Use tether hook for additional leverage

PAD

A. Release knob fails to rotate open	1. Verify knob in release position 2. Attempt to rotate knob using 7/16-in Ratchet on knob's 7/16-in hex stud 3. Release contingency release bar by rotating captive release bolts (2) 5 turns, **PGT settings: A6, CCW2, 30.5**
B. Release knob fails to rotate close	1. Verify knob in release position 2. Stow PAD, retrieve backup PAD from crew bag NOTE: PAD in crew lock can't be left outside because of paint

PGT

A. No LEDs	1. Perform LED test 2. Use display torque
B. LEDs and torque messages do not agree	Use torque message and notify **MCC-H**
C. Mode switch breaks	Retrieve spare PGT
LCD MESSAGES	
D. BATTRY HITEMP	1. Power off PGT 2. If alternate battery available; change battery 3. Retrieve spare PGT 4. Switch to ratchet mode
E. BATTRY LOTEMP (blinking)	1. Drive tool with no load to increase battery temperature 2. If alternate battery available; power off and change battery 3. Retrieve spare PGT 4. Power off and switch to ratchet mode
F. BATTRY LOVOLT (blinking)	1. Continue using tool until unable to deliver sufficient torque 2. Retrieve spare PGT 3. Power off and switch to ratchet mode
G. CAL FAILED	1. Press, release trigger to repeat calibration 2. Power cycle and calibrate 3. Retrieve spare PGT 4. Power off and switch to ratchet mode
H. COLLAR ERROR	1. Cycle torque and speed collars to clear error 2. Power cycle and calibrate 3. Retrieve spare PGT 4. Power off and switch to ratchet mode
I. COMPAR ERROR	1. Cycle torque collar and A/B mode switch 2. Power cycle and calibrate 3. Retrieve spare PGT 4. Power off and switch to ratchet mode
J. EEPROM WR ERR (blinking) HYBRID HITEMP OVER CURR SLFTST FAIL X	1. Power cycle and calibrate 2. Retrieve spare PGT 3. Power off and switch to ratchet mode
K. HI TORQ	1. Contact **MCC-H** and report torque (Real time engineering assessment required) 2. Power cycle and calibrate 3. Retrieve spare PGT 4. Power off and switch to ratchet mode

15A WORKAROUNDS CRIBSHEET (Cont)

L. HICURR	1. Reattempt operation – Can be caused by excessive rotation of the PGT body while torquing 2. Power cycle and calibrate 3. Retrieve spare PGT 4. Power off and switch to ratchet mode
M. LO TORQ (Expected during bolt release)	1. Reattempt operation until desired torque is reached 2. Power cycle and calibrate 3. Retrieve spare PGT 4. Power off and switch to ratchet mode
N. LOCURR	1. Reattempt operation 2. Power cycle and calibrate 3. Retrieve spare PGT 4. Power off and switch to ratchet mode
O. LOG IS FULL (blinking)	1. Cycle torque and speed collars to clear message 2. Continue operation
P. MOTOR HITEMP	1. Power off PGT 2. Retrieve spare PGT 3. Switch to ratchet mode

SAFETY TETHER

A. Safety tether fails to retract/tend	1. Verify reel is unlocked 2. Verify tether reel and/or cable guide (for 85-ft tethers) is clear of FOD 3. Pull out small amount of cable and allow reel to retract while holding light tension on the cable 4. Tap side of reel housing during retraction 5. Report ID # of faulty tether to **MCC-H** and use alternate safety tether 6. Coil safety tether to bring inside 7. For 85-ft tether, on **MCC-H** GO: If coiling tether is not practical, release level wind mechanism bypass on back of safety tether (Red indicator will show around edge of bypass once released) NOTE Once level wind has been released, cable guide will likely be frozen in place. This will limit the amount of tether that can be successfully retracted into the tether housing and may require coiling of excess tether. Level wind release will require safety tether be returned for ground servicing. If tether fails to retract due to thermal issue, normal tether function may return after tether brought IVA
B. Safety tether red stripe showing (any length)	Safety tether cannot be used – Report ID # of faulty tether to **MCC-H** – Use alternate safety tether
C. Crew hook fails	1. On load alleviating end: Use waist tether to replace alleviating strap – Report ID # of faulty tether to **MCC-H** – Retrieve replacement safety tether 2. On anchor end: Report ID # of faulty tether to **MCC-H** and use an alternate safety tether

15A WORKAROUNDS CRIBSHEET (Cont)

SCOOPS

A. Scoop will not release from fitting	1. If actuator will not pull back while in locked position, tap actuator with tool to release 2. On **MCC-H** GO: Leave scoop in place 3. On **MCC-H** GO: Remove non-captive contingency screws; 5 turns: **PGT [A1 (7.0), CCW2, 30.5], 5/32 Allen drive** – Round Scoop: 7 screws (see figure)

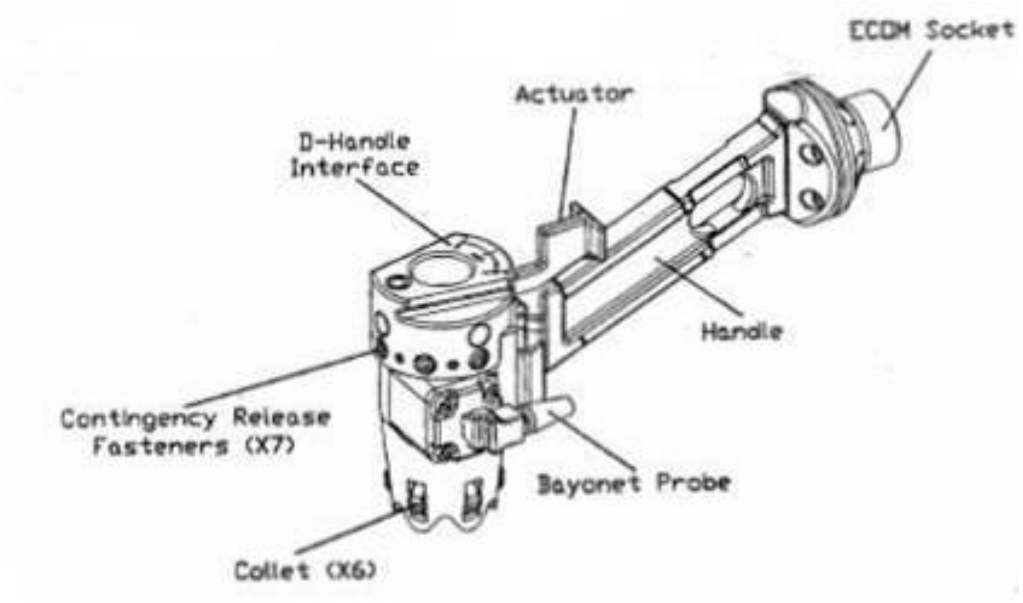

Round Scoop

SOCKET CADDY

A. Socket fails to release from socket caddy	1. Verify PIP pin fully inserted into drop proof tether interface on socket 2. Reattempt using a different PIP pin

TA CLAMP

A. TA clamp fails to release	1. With handle up, press down on top of rounded clamp 2. With handle up, use tether hook to pry drawhook from capture pin

TETHER SHUTTLE

A. Tether shuttle will not release from CETA/MT rail	On **MCC-H** GO: Remove non-captive screws (2) at hingeline to release nadir section with slide lock (not captive) (see figure): **PGT [A7 (9.2), CCW1, 30.5], 5/32 Allen drive**

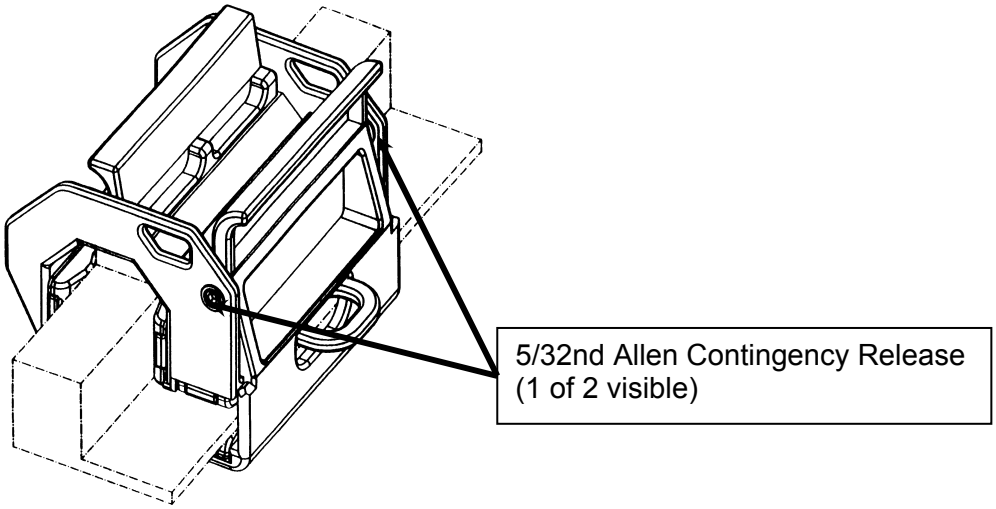

Tether Shuttle

TORQUE MULTIPLIER

D. TM will not release from fitting	1. Place TM anti-backlash in neutral, if unable: PGT [RCW, 30.5] – Apply cw torque while pushing anti-backlash button to neutral. Reattempt removal 2. If able to lift TM off of bolt, attempt to rock off of fitting (Square TM only) 3. On **MCC-H** GO: Release TM contingency release band pin 20 turns (do not exceed 28 turns): **PGT [A1 (7.0), CCW2, 30.5], 5/32 ball end driver** – When band springs open remove TM

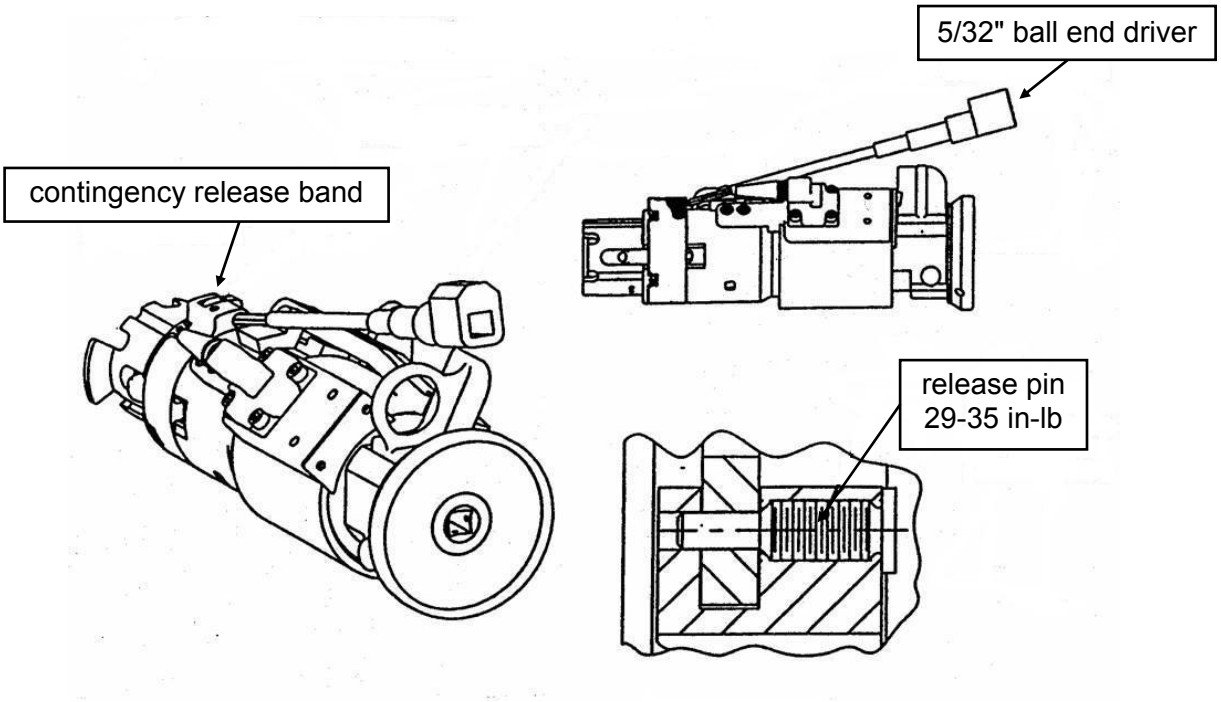

Torque Multiplier

TSA (HWTSA)

A. Latch fails to open	Release 7/16 EVA bolt on latch bracket; rotate bracket clear of latch **PGT [A2 3.8 ft-lb, CCW2, 30.5]-6-ext 7/16** Loosen bolt 1-2 turns
B. Latch fails to close	Close remaining latches (1 of 2 required for landing)

16.1a RTAS GAP CLOSURE (CORNER 1 OR 2)

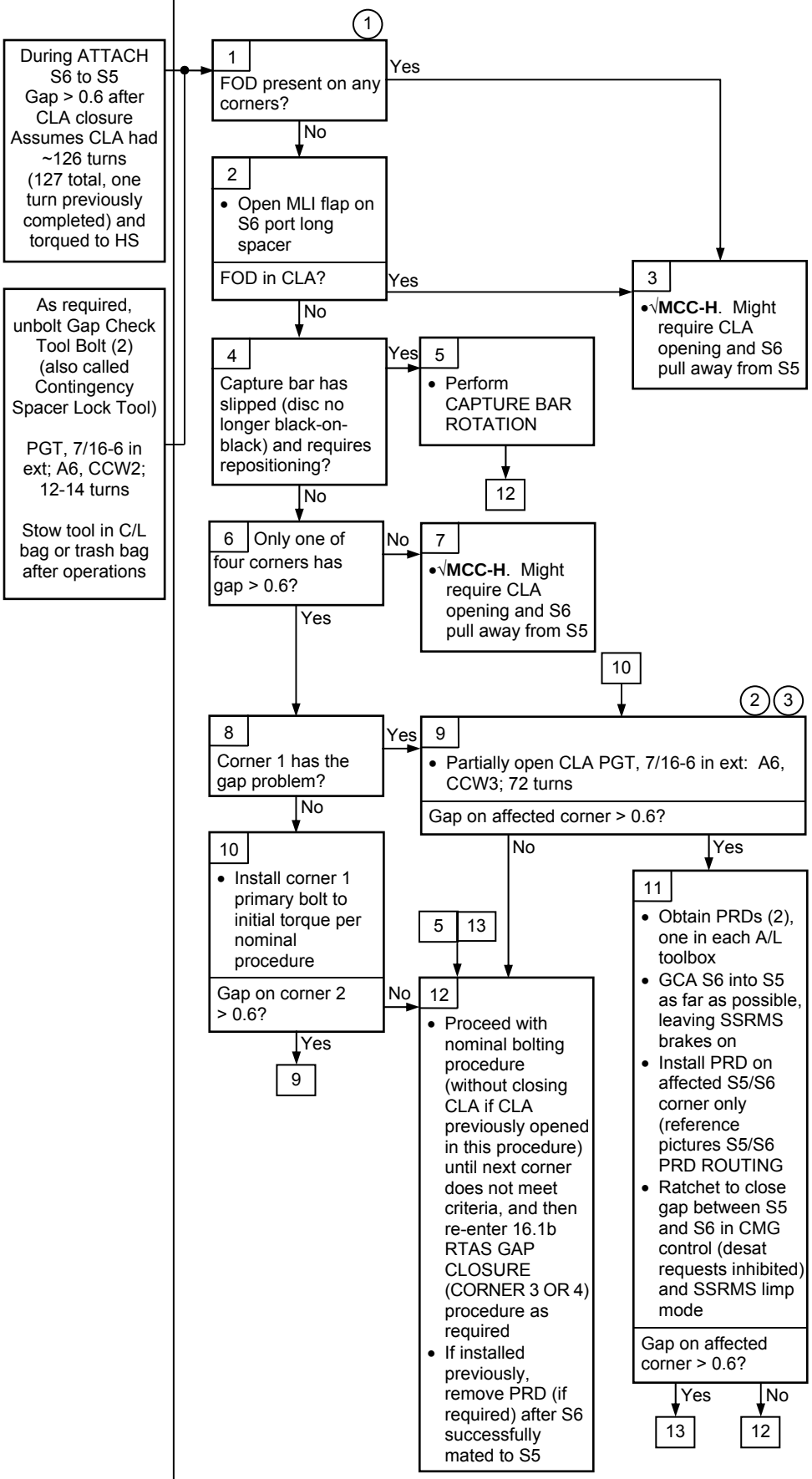

(1) Gap = distance between passive and active RTAS housings. Gap must not be greater than 0.6 in prior to driving primary bolt. Gap must not be greater than 0.478 in after primary bolt is driven to allow for shear loading. Measuring tools: Small crew hook = 0.430 in; drop proof tether end of 7/16 in-6 in ext = 0.66 in; S5/P5 contingency spacer locking tool thickness range = 0.3 to 0.6 in

(2) Structure warped or hardware interference (hardware interference more likely)

(3) S6 might 'rock' such that gap appears on different corner. If Corner 1 meets gap criteria and one other corner does not meet gap criteria, continue with nominal procedure for corner 1 and then re-assess affected corner

16.1a (Cont)

11

13

- Remove PRD
- SSRMS brakes ON
- Release corner 1 if required PGT, 5/8-7.8 in ext: B7,CCW2; 27 turns, √2-7 threads visible
- Verify separation plane clear
- Open CLA fully PGT, 7/16-6 in ext: A6, CCW3; 55 turns or as required to HS
- SSRMS drive S6 out to 30 cm or as required to allow EV crew to visually and tactilely assess S6 nuts/bearings
- EV crew assess whether primary bearing is centered and capable of sliding from sliding ~0.160" in all directions for corner 1 or side to side for corner 2. Center S6 bearing as required
- Verify no FOD between elements, in S6 nuts, in coarse alignment holes/cones
- Perform nominal GCA and bolting procedure and re-enter RTAS GAP CLOSURE as required

14

- If no joy, √**MCC-H**

16.1b RTAS GAP CLOSURE (CORNER 3 OR 4)

During ATTACH S6 to S5 Gap > 0.6 after CLA closure and corner 1, 2 successful install to initial torque

As required, unbolt Gap Check Tool Bolt (2) (also called Contingency Spacer Lock Tool)

PGT, 7/16-6 in ext; A6, CCW2; 12-14 turns.

Stow tool in C/L bag or trash bag after operations

(1) (2)

1 Only one corner has gap > 0.6?

No → **2**
- √**MCC-H**. Might require releasing bolts, CLA opening and S6 pull away from S5

Yes ↓

3
- Install 'good' corner to initial torque per nominal procedure

Gap on affected corner > 0.6?

Yes → **4**
- Obtain PRDs (2), one in each A/L toolbox
- GCA S6 into S5 as far as possible, leaving SSRMS brakes on
- Install PRD on affected S5/S6 corner only (reference pictures S5/S6 PRD ROUTING
- Ratchet to close gap between S5 and S6 in CMG control (desat requests inhibited) and SSRMS limp mode

Gap on affected corner > 0.6?

No → **6**
- Proceed with nominal bolting procedure
- Remove PRD (if required) after S6 successfully mated to S5

Yes ↓ **7**
- Report gap to **MCC-H**
- Proceed with nominal bolting (driving primary bolt) despite gap
- If primary bolt fails, perform ATTACH S6 TO S5 USING CONTINGENCY FASTENERS
- Remove PRD (if required) after S6 successfully mated to S5

No ↓ **5**
- Proceed with nominal bolting procedure
- Remove PRD (if required) after S6 successfully mated to S5

(1) Gap = distance between passive and active RTAS housings. Gap must not be greater than 0.6 in prior to driving primary bolt. Gap must not be greater than 0.478 in after primary bolt is driven to allow for shear loading. Measuring tools: Small crew hook = 0.430 in; drop proof tether end of 7/16 in-6 in ext = 0.66 in; S5/P5 contingency spacer locking tool thickness range = 0.3 to 0.6 in

(2) Structure warped or hardware interference (hardware interference more likely)

CAPTURE BAR ROTATION (00:30)

IV	EV1	EV2
1. √SSRMS grappled, brakes on	ROTATE S6 CAPTURE BAR 1. Retrieve 7/16-18-in ext socket from Z1 port toolbox 2. Partially open **S5 CLA (capture latch)** **PGT, 7/16-6-in ext: A6, CCW3**; 75 turns NOTE EV may need to remove MWS to ingress long spacer. If APFR access required, check MCC for settings 3. Open S6 thermal shroud flap to access capture bar if not done previously 4. Loosen **capture bar disk clamp bolt** **PGT, 7/16-18-in ext; A7, CCW2**; ~2.5-3 turns to HS 5. Manually turn **capture bar disk center bolt** **PGT, 7/16-18-in ext; RCCW**, turn until clamp bolt is at end of disc slot (rotating capture bar to re-engaged position; black on black) 6. Tighten **capture bar disk clamp bolt** **PGT, 7/16-18-in ext; A5, CW2**; ~2.5-3 turns to HS 7. Close S6 thermal shroud 8. Close **S5 CLA (capture latch)** per nominal procedure	

CAPTURE BAR ROTATION – TASK DATA

EVA Tools:

EV1 (FF)	EV2 (FF)
PGT	N/A
7/16-18-in ext	
7/16-6-in ext	

EVA Fasteners:

Fastener	Head Size	Qty	Install Torque (ft-lb)	Release Torque (ft-lb)	Failure Torque (ft-lb)	Turns	RPM
Capture bar disk clamp bolt	7/16-in	1	7.0	9.2	13.1 (rel) 10.6 (inst)	2.5-3.0	30
Capture bar disk center bolt	7/16-in	1	N/A	30.5	116.8	.33	N/A

EVA Connectors: None

Foot Restraints:

Task	WIF	APFR Setting

Warnings:

Cautions:

Notes:

1. Crewmember may need to remove MWS to ingress long spacer

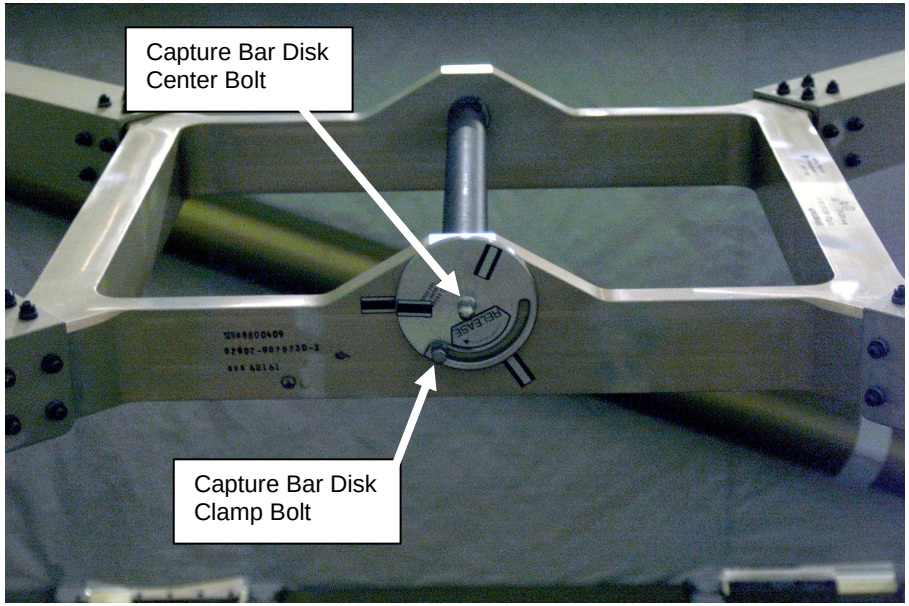

ATTACH S6 TO S5 USING CONTINGENCY FASTENERS

IV	EV1	EV2
1. Initial RTAS gap: _____ 2. Circle which contingency sleeve used: Left or Right	NOTE EVA worksite per nominal bolt engagement. Contingency Spacer Lock Tools are at S5 inboard and outboard RTAS corner 1. Only one Contingency Fastener is required 1. Remove ground straps if required 2. Unbolt **Gap Check Tool Bolt (2)** (also called Contingency Spacer Lock Tool) **PGT, 7/16-6-in ext; A6,CCW2**; 12-14 turns 3. Measure RTAS gap, record gap CAUTION Do not loosen S5 contingency spacer locking bolt more than 1 turn. Excessive turns of spacer locking bolt may cause guide washer to come out of slot and snap ring washer to bend 4. Loosen **contingency spacer locking bolt** **PGT, 7/16-6-in ext; B2,CCW1**; 1 turn only 5. Tighten spacer sleeve until snug against S6 spherical bearing (~10 turns cw) 6. Notify IV which contingency sleeve used (“Left” or “Right” when looking at corner number) 7. Verify spacer sleeve aligned within nut by jiggling back end of S6 contingency ball/nut NOTE Contingency spacer sleeve may need to be rotated to allow tool installation, prefer ccw rotation 8. Install Contingency Spacer Lock Tool over contingency spacer sleeve (friction fit) 9. Fasten **contingency spacer locking bolt** **PGT, 7/16-6-in ext; B2,CW1**; 1 turn only 10. Tighten **RTAS contingency bolt** **PGT, 7/16-6-in ext; B1,CW2**; 7-9 turns. Bolt will come out of launch position and move ~2 in fwd 11. Push bolt ~0.5 in to contact nut	

ATTACH S6 TO S5 USING CONTINGENCY FASTENERS (Cont)

IV	EV1	EV2
3. Final RTAS gap: _____	12. Continue to tighten **RTAS contingency bolt** **PGT, 7/16-6-in ext; B1,CW2**; 9.5-11.5 turns to HS 13. Torque **RTAS contingency bolt** Torque Wrench, 7/16-6-in ext; 57 ft-lb 14. Remove Contingency Spacer Lock Tool from sleeve 15. Measure gap; report to **MCC-H** 16. Stow Contingency Spacer Lock Tool in trash bag 17. Remove **spherical bearing locking plate bolt on S6** **PGT, 7/16-6-in ext; A5,CCW2**; 12-14 turns 18. Stow plate with wire tie to adjacent handrail 19. Install ground strap per nominal ATTACH S6 TO S5 procedure	

ATTACH S6 TO S5 USING CONTINGENCY FASTENERS – TASK DATA

EVA Tools:

EV1 (FF)	EV2 (FF)
PGT	N/A
7/16-6-in ext	
Torque Wrench	

EVA Fasteners:

Fastener	Head Size	Qty	Ground Install Torque (ft-lb)	Release Torque (ft-lb)	Failure Torque (ft-lb)	Turns	RPM
Gap Check Tool bolt (Contingency spacer lock tool bolt)	7/16-in	2/Tool	~4	4.3	12.2	12-14	30
Contingency spacer locking bolt	7/16-in	1/RTAS	~7	16	31.1	1 turn max	N/A
RTAS contingency bolt	7/16-in	2/RTAS	57	N/A	115.2	7-9: Release from uplock 9.5-11.5: Install	30
Spherical bearing locking plate bolt	7/16-in	1/RTAS	~3.0	3.0	12.2	12-14	10

EVA Connectors: None

Foot Restraints: See nominal procedure

Warnings:

Cautions:

1. Do not loosen S5 contingency spacer locking bolt more than 1 turn. Excessive turns of spacer locking bolt may cause guide washer to come out of slot and cause snap ring washer to bend

Notes:

1. EVA worksite per nominal bolt engagement. Contingency spacer lock tool is at RTAS corner #1 on inboard and outboard of S5
2. If contingency spacer sleeve needs to be rotated to allow tool installation, rotate ccw
3. Contingency bolt will come out of launch position and move ~2 in fwd after 7 turns

PRD S5-S6 OVERVIEW

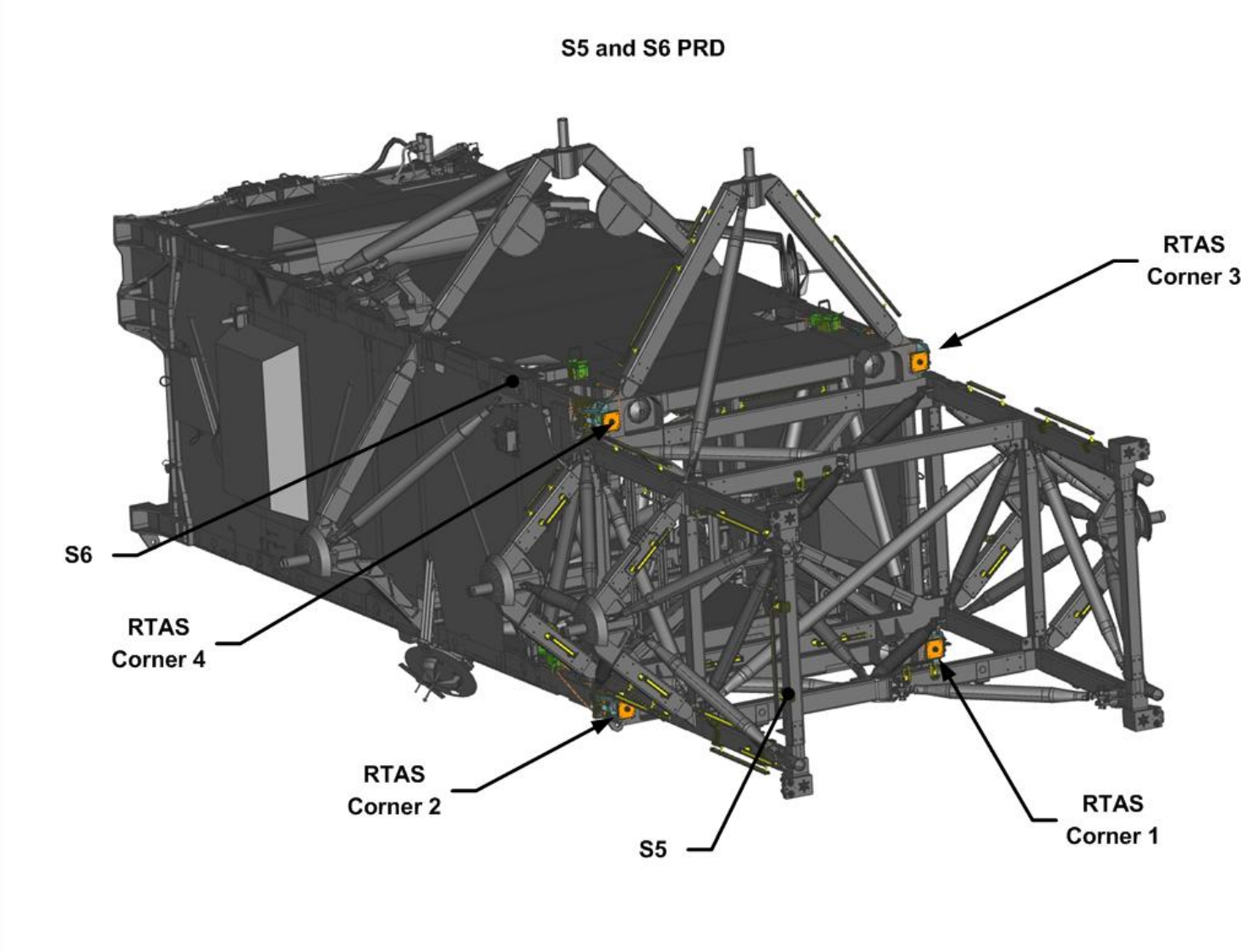

PRD RTAS CORNER 1 (PRIMARY)

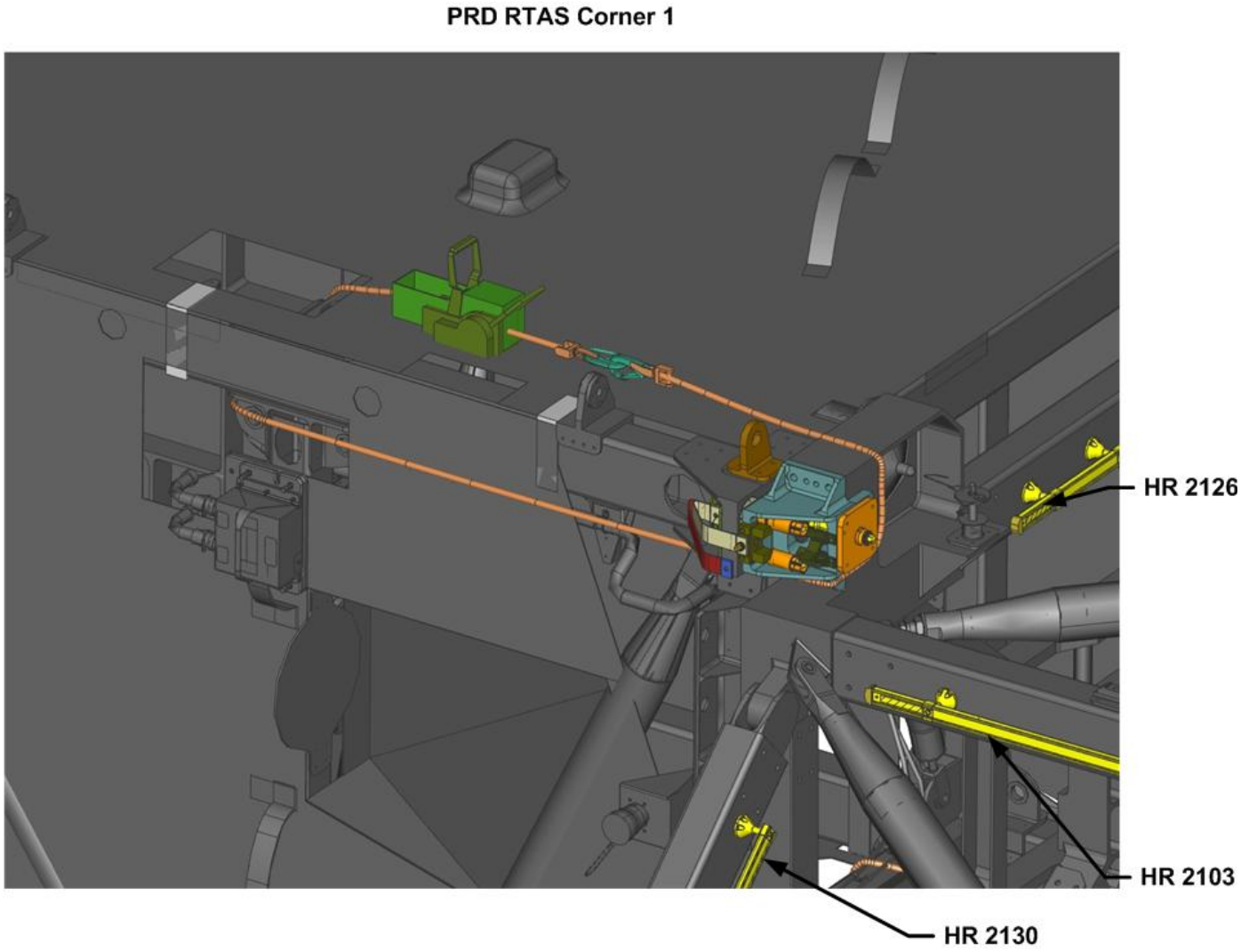

PRD RTAS CORNER 1 (PRIMARY) NBL

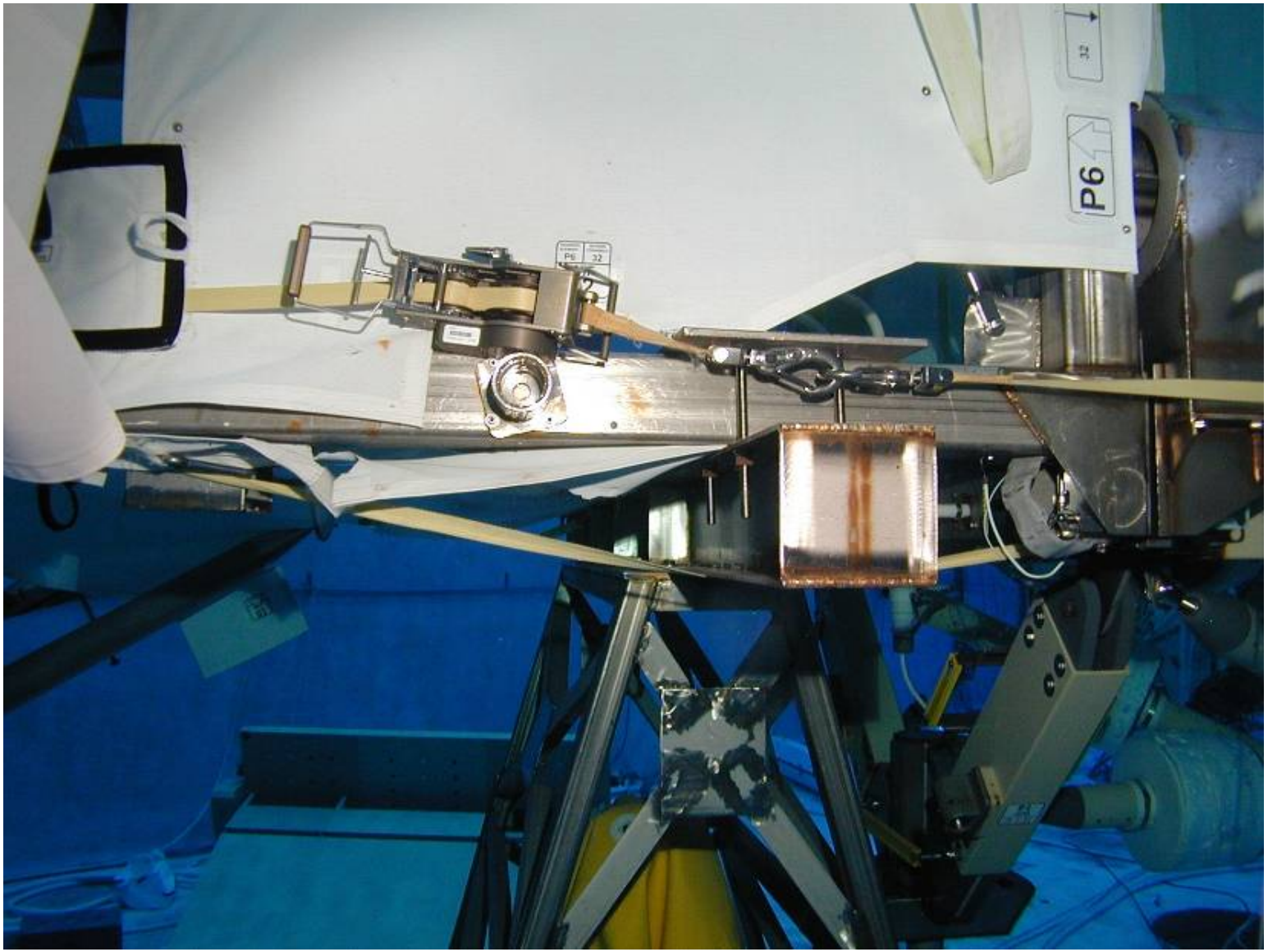

PRD RTAS CORNER 2

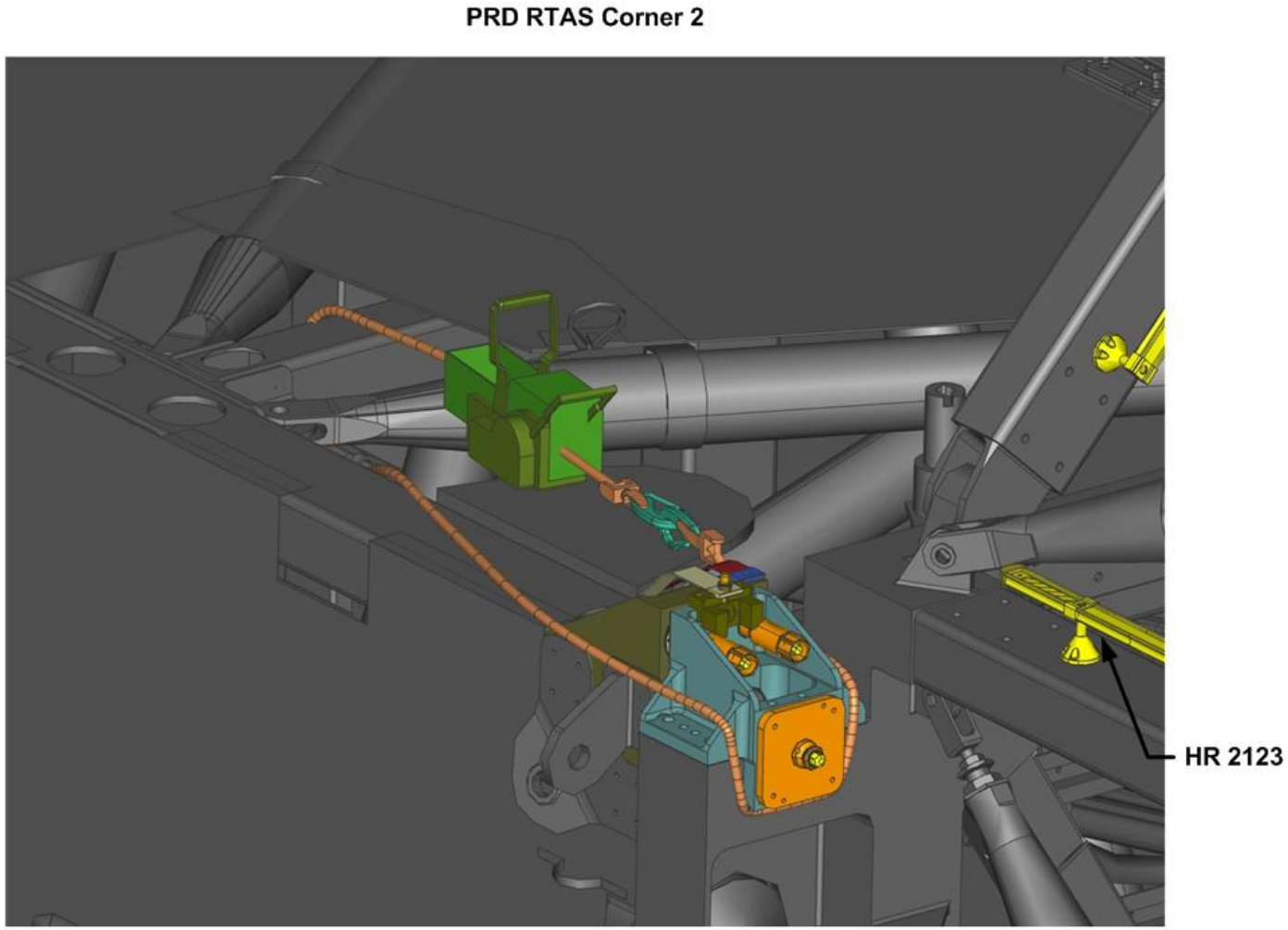

PRD RTAS CORNER 2 NBL

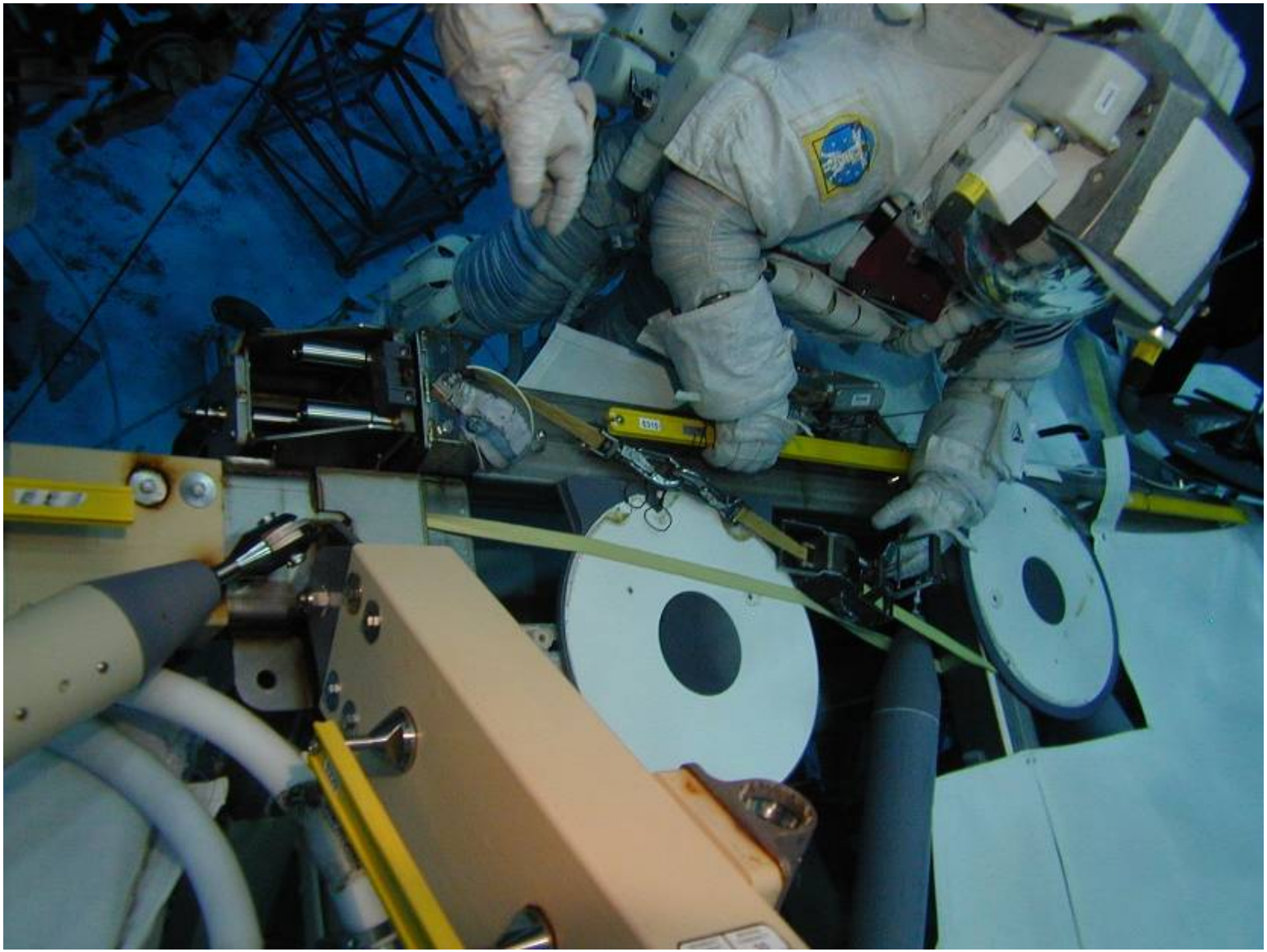

PRD RTAS CORNER 3

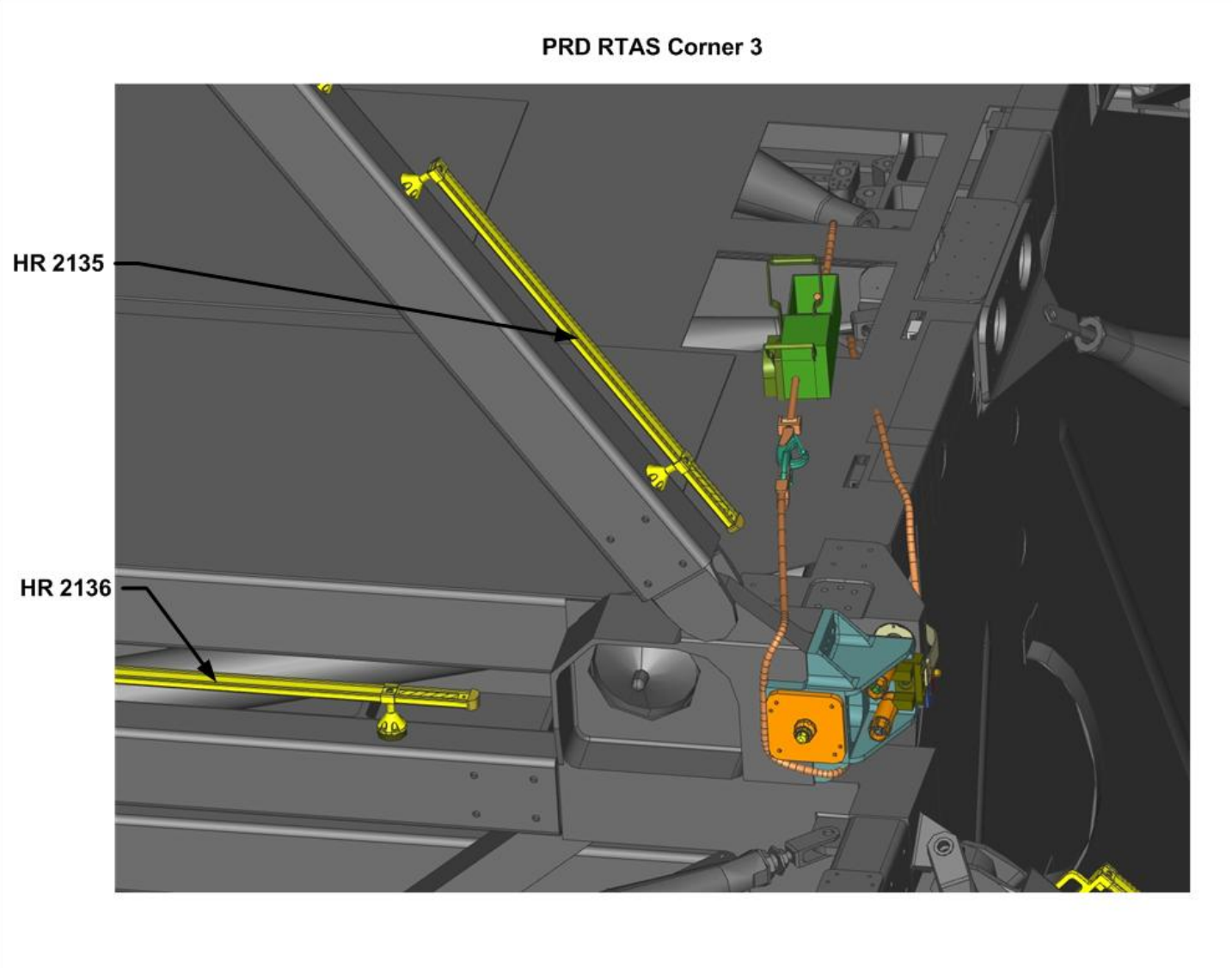

PRD RTAS CORNER 3 NBL (STRAP ROUTING)

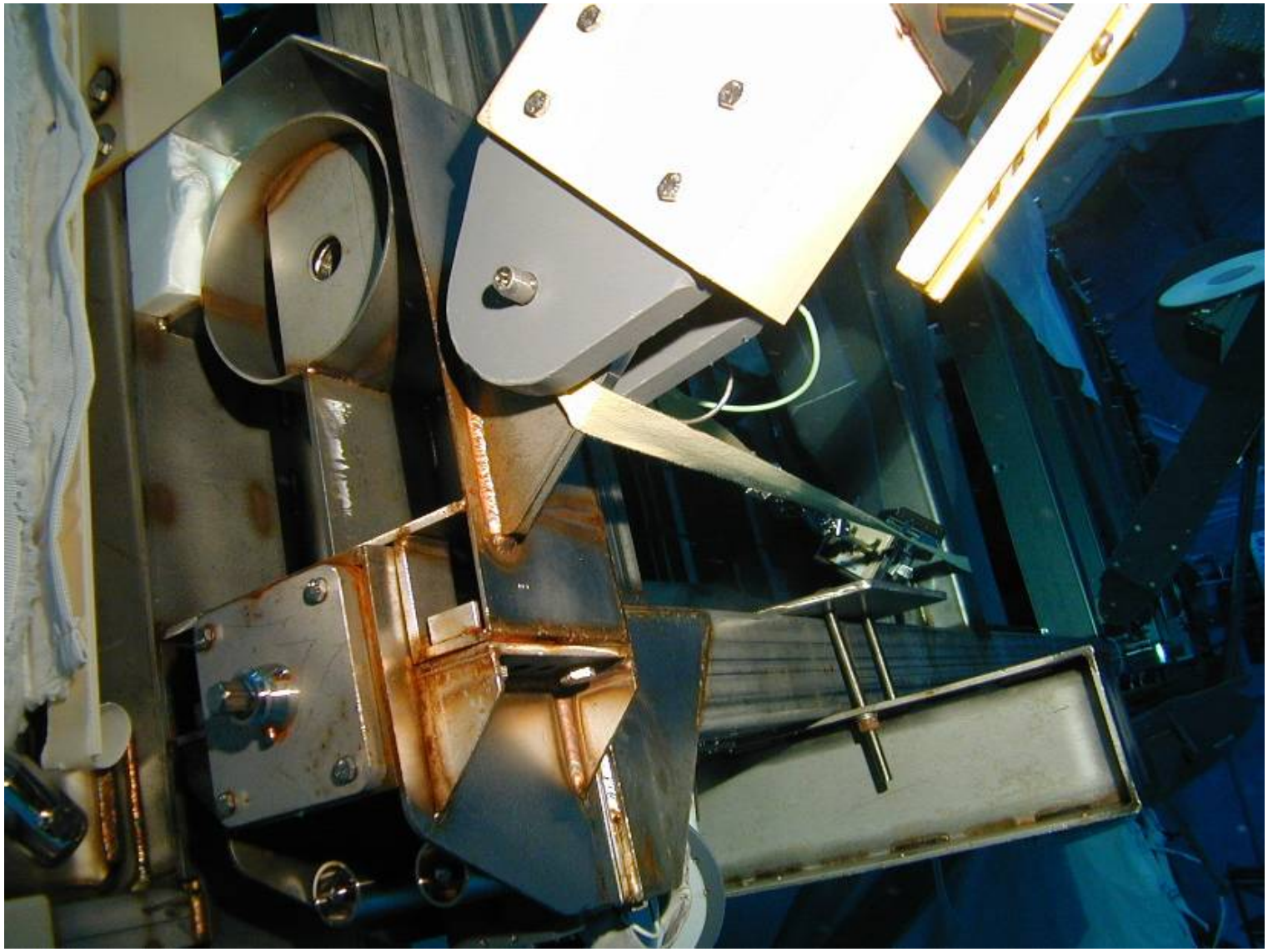

PRD RTAS CORNER 3 NBL (STRAP ROUTING) (Cont)

PRD RTAS CORNER 3 NBL

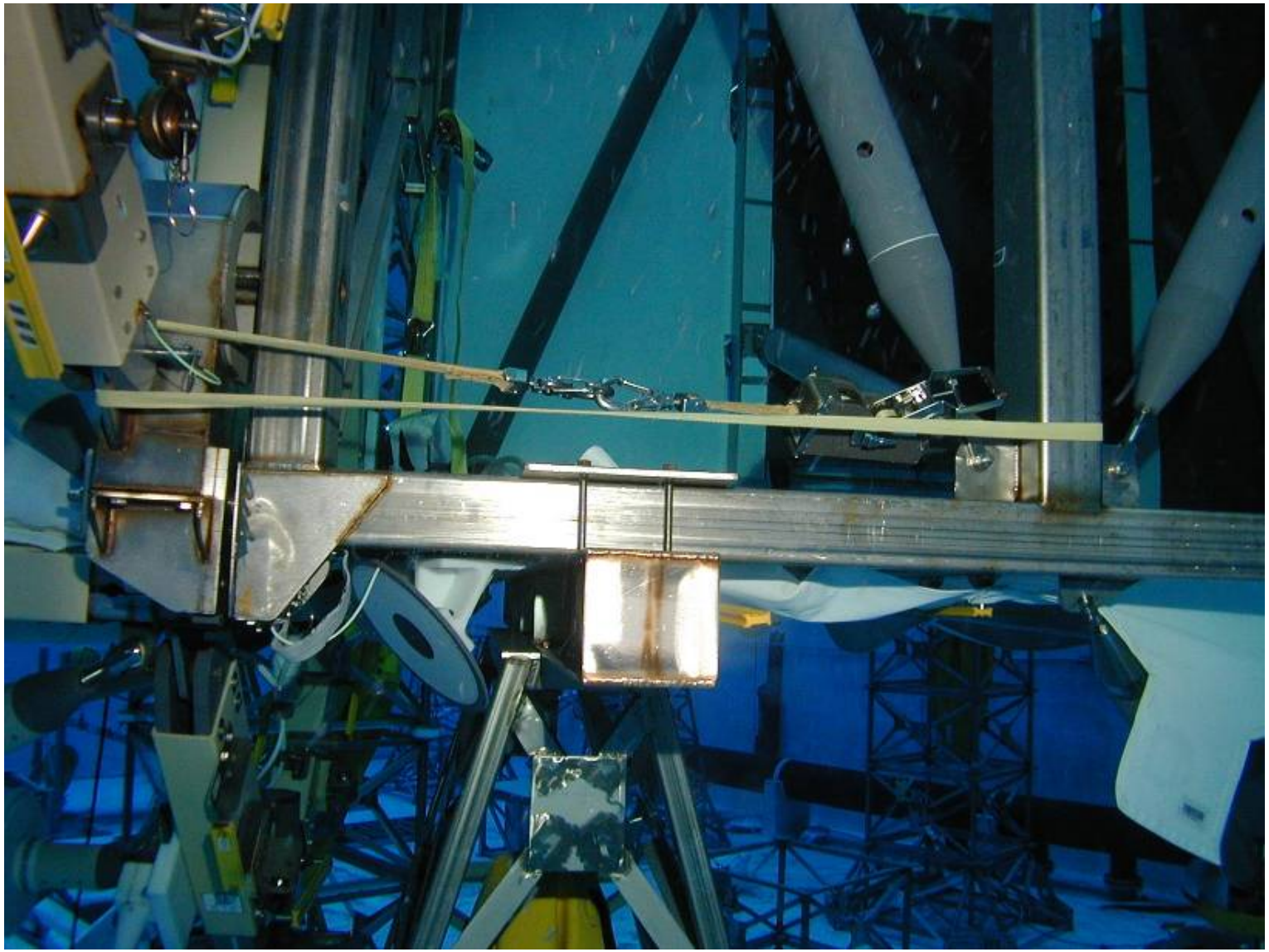

PRD RTAS CORNER 4 (PRIMARY)

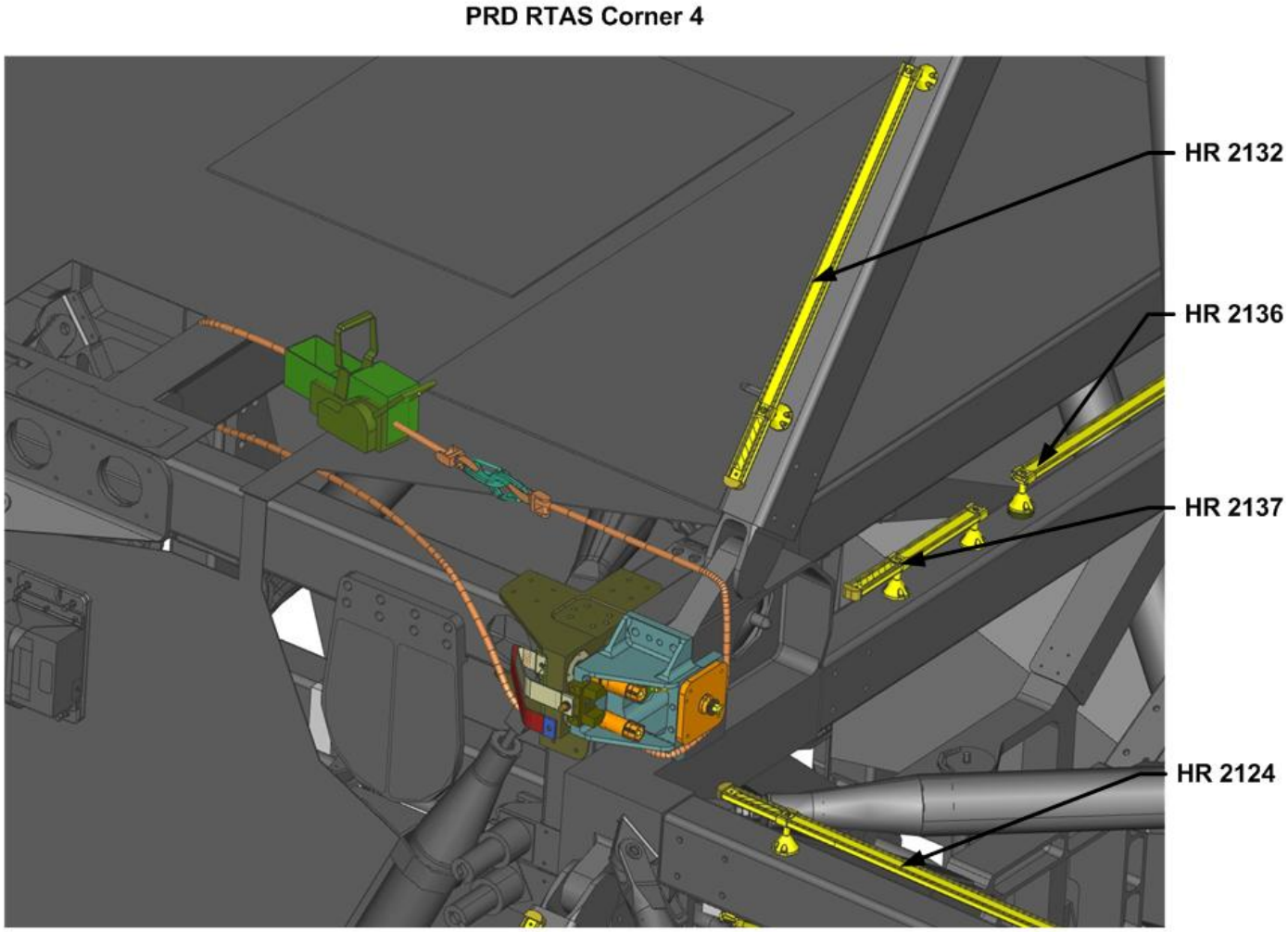

PRD RTAS CORNER 4 (PRIMARY) NBL

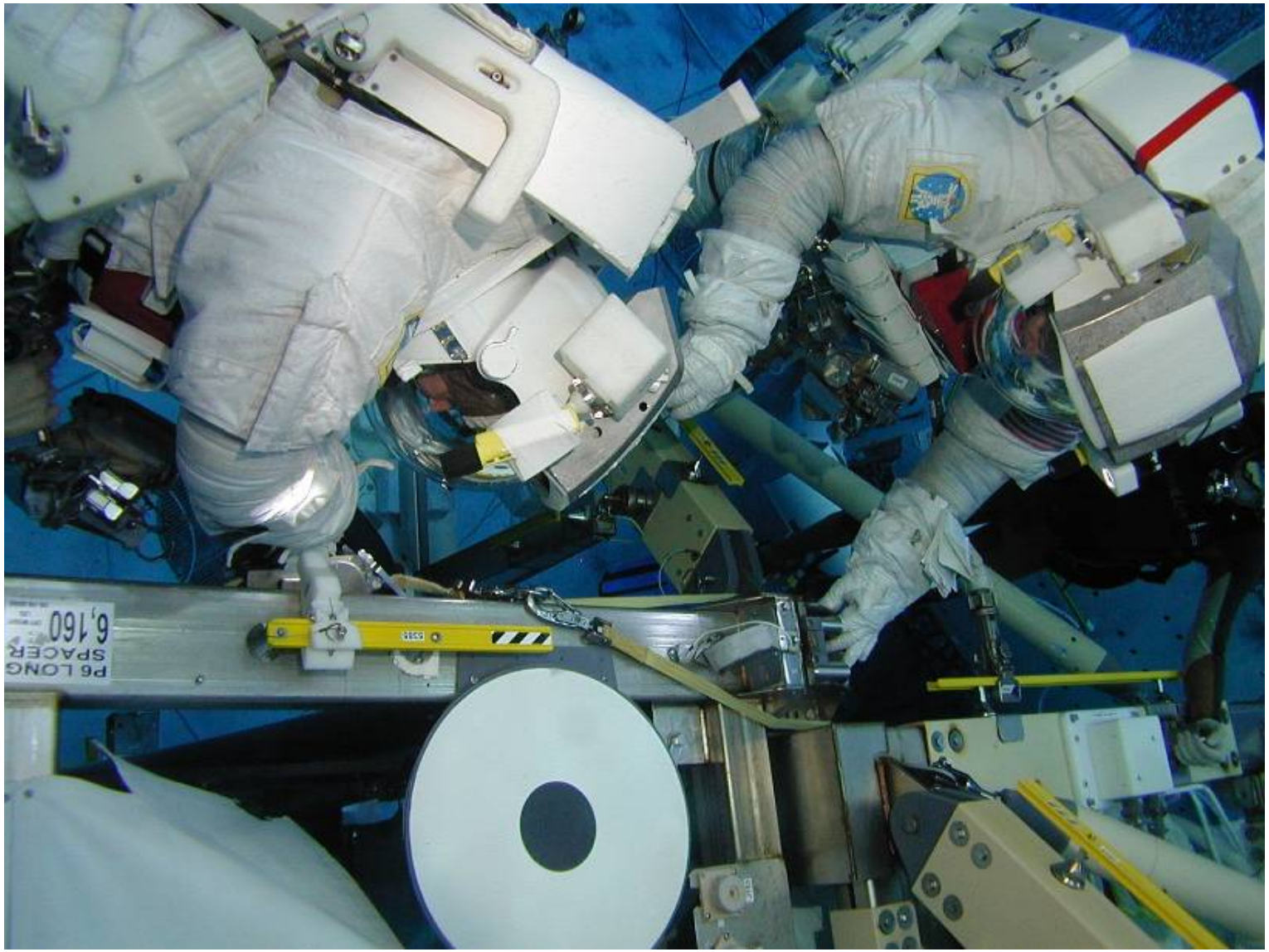

PRD RTAS CORNER 4 (PRIMARY) (STRAP ROUTING)

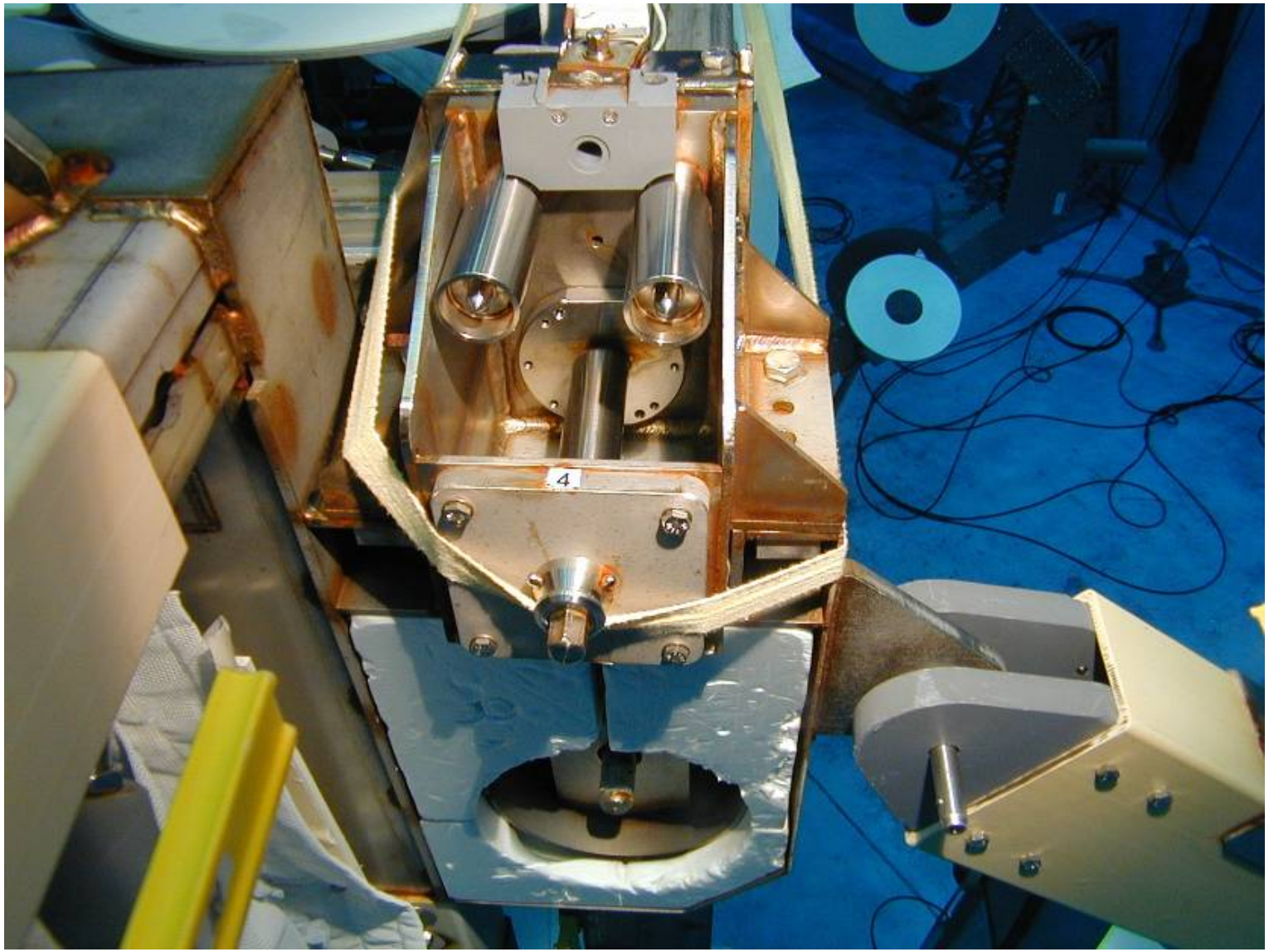

This Page Intentionally Blank

S6 RADIATOR MANUAL OVERRIDE TO DEPLOY/RETRACT

IV	EV1	EV2
MCC-H 1. Verify PVR motor OFF NOTE Free Drift or CMG Control with Thrusters Disabled is required while radiator is being deployed/retracted. Applies only while mechanisms are in motion **MCC-H** 2. Configure ISS/Orbiter attitude control to CMG Control with thrusters disabled or Orbiter and ISS in free drift IV 3. Give EV crew GO for extend/retract radiator IV 4. On EV GO, cmd nominal attitude control 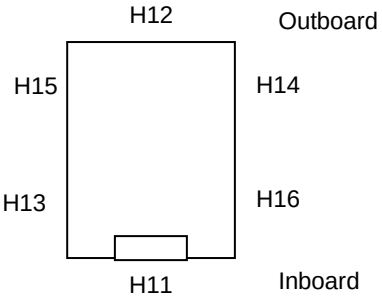 	MANUAL OVERRIDE TO EXTEND (RETRACT) RADIATOR 1. If required, APFR, set up and ingress (see Task Data for WIF position and APFR settings) 2. On IV GO, release **PVR MDA fastener H32** **PGT**, 7/16-6-in ext; **B1** (12 ft-lb), **CCW2 (CW2)** 30 RPM, MTL **30.5**; push to engage (5 lb) ~45 turns to HS 3. If required to re-engage **H32 locking collar** **PGT**, 7/16-6-in ext; **RCCW (RCW)**, MTL **30.5**; ~1/6 turn until collar pops up completely and re-engages 4. Report to IV, radiator deployment (retraction) complete If retracting, re-install PVR cinches using the procedure below. Manual compression of the radiator panels may be required to install cinches (two crewmember operation): ❑ Cinch H11 ❑ Cinch H13 ❑ Cinch H15	If retracting, re-install PVR cinches using the procedure below. Manual compression of the radiator panels may be required to install cinches (two crewmember operation): ❑ Cinch H12 ❑ Cinch H14 ❑ Cinch H16

S6 RADIATOR MANUAL OVERRIDE TO DEPLOY/RETRACT (Cont)

IV	EV1	EV2
	REINSTALL PVR CINCHES 1. Position for cinch H11 installation 2. Verify cinch H11 bolt is engaged in last thread (to maximize clearance); verify fixed end pulled all the way out and seated properly in bracket 3. Compress radiator panels and assess cinch H11 installation 4. If EV1 and EV2 both GO for cinch install 5. Give EV2 GO for cinch install, install cinch H11 6. Remove winch bar PIP pin (H33); align winch bar clevis to lug on radiator; re-install PIP pin 7. If NO GO for cinch install, assess winch bar installation	REINSTALL PVR CINCHES 1. Position for cinch H12 installation 2. Verify cinch H12 bolt is engaged in last thread (to maximize clearance); verify fixed end pulled all the way out and seated properly in bracket 3. Compress radiator panels and assess cinch H12 installation 4. If EV1 and EV2 GO for cinch install 5. On GO from EV1, install cinch H12 6. Remove winch bar PIP pin (H34); align winch bar clevis to lug on radiator; re-install PIP pin 7. If NO GO for cinch install, assess winch bar installation
Cinch (Initial Torque) Torque/Turns H11 _____/_____ H12 _____/_____ H13 _____/_____ H14 _____/_____ H15 _____/_____ H16 _____/_____ Cinch (Final Torque) Torque/Turns H11 _____/_____ H12 _____/_____ H13 _____/_____ H14 _____/_____ H15 _____/_____ H16 _____/_____ Cinch (Manual Torque) Turns H11 _____ H12 _____ H13 _____ H14 _____ H15 _____ H16 _____	8. If GO for winch installation: 9. Remove winch bar PIP pin (H33) 10. Give EV2 GO for winch install, compress radiator panels, align winch bar clevis to lug on radiator, re-install PIP pin 11. Remove FQDC shroud per steps below 12. Retract winch per steps below 13. Replace FQDC shroud per steps below 14. If NO GO for winch install: 15. Remove FQDC shroud per steps below 16. Extend winch per steps below 17. Remove winch bar PIP pin (H33) 18. Give EV2 GO for winch install; align winch bar clevis to lug on radiator; re-install PIP pin 19. Retract winch per steps below 20. Replace FQDC shroud per steps below 21. Install cinch H11 22. Tension **cinch H11** **PGT**, 7/16-6-in ext; **A3** (4.8 ft-lb), **CW2** (30 RPM), MTL **30.5**; push 5 lb, ~6-14 turns to HS 23. Install and tension **cinches H13 and H15** **PGT**, 7/16-6-in ext; **A3** (4.8 ft-lb), **CW2** (30 RPM), MTL **30.5**; push 5 lb, ~6-14 turns to HS, each	8. If GO for winch installation: 9. Remove winch bar PIP pin (H34) 10. On GO from EV1, compress radiator panels, align winch bar clevis to lug on radiator, re-install PIP pin 11. If NO GO for winch install: 12. Remove winch bar PIP pin (H34) 13. On GO from EV1, compress radiator panels, align winch bar clevis to lug on radiator, re-install PIP pin 14. Install cinch H12 15. Tension **cinch H12** **PGT**, 7/16-6-in ext; **A3** (4.8 ft-lb), **CW2** (30 RPM), MTL **30.5**; push 5 lb, ~6-14 turns to HS 16. Install and tension **cinches H14 and H16** **PGT**, 7/16-6-in ext; **A3** (4.8 ft-lb), **CW2** (30 RPM), MTL **30.5**; push 5 lb, ~6-14 turns to HS, each

S6 RADIATOR MANUAL OVERRIDE TO DEPLOY/RETRACT (Cont)

IV	EV1	EV2
	24. Tighten **cinch H11** **PGT**, 7/16-6-in ext; **A3** (4.8 ft-lb), **CW2** (30 RPM), MTL **30.5**; push 5 lb, turn to HS 25. Tighten **cinch H11** **PGT**, 7/16-6-in ext; **RCW**, MTL **30.5**; 3/4 turn 26. Verify anti-rotation device is up; if not, rotate bolt cw until up, max 60 deg 27. Tighten **cinches H13 and H15** **PGT**, 7/16-6-in ext; **A3** (4.8 ft-lb), **CW2** (30 RPM), MTL **30.5**; push 5 lb, turn to HS 28. Tighten **cinches H13 and H15** **PGT**, 7/16-6-in ext; **RCW**, MTL **30.5**; 3/8 turn 29. Verify anti-rotation device is up; if not, rotate bolt cw until up, max 60 deg (x2) <u>REMOVE FQDC SHROUD</u> 1. Stage RET for FQDC shroud restraint 2. Release FQDC shroud bolts (4) **PGT**, 7/16-6-in ext; **A7** (9.2 ft-lb), **CCW2** (30 RPM), MTL **30.5**, 7 turns 3. Restrain FQDC shroud w/RET <u>EXTEND WINCH</u> 1. Actuate H10 bolt **PGT**, 7/16-6-in ext; **A1** (2.5 ft-lb), **CW1** (10 RPM), MTL **30.5**; push 5 lb, extend winch bars until winch bar clevis aligns with radiator lug (=20 turns max) <u>RETRACT WINCH</u> 1. **PGT[A1** 2.5 ft-lb, **CCW1** 10 RPM, MTL **30.5]-6ext 7/16**: Actuate H10 bolt, push 5 lb, fully retract winch bars (~25 turns max) <u>REPLACE FQDC SHROUD</u> 1. Retrieve FQDC Shroud 2. Engage FQDC shroud bolts (4) **PGT**, 7/16-6-in ext; **A7** (9.2 ft-lb), **CW2** (30 RPM), MTL **30.5**, 7 turns to HS 3. Retrieve RET	17. Tighten **cinch H12** **PGT**, 7/16-6-in ext; **A3** (4.8 ft-lb), **CW2** (30 RPM), MTL **30.5**; push 5 lb, turn to HS 18. Tighten **cinch H12** **PGT**, 7/16-6-in ext; **RCW**, MTL **30.5**; 3/4 turn 19. Verify anti-rotation device is up; if not, rotate bolt cw until up, max 60 deg 20. Tighten **cinches H14 and H16** **PGT**, 7/16-6-in ext; **A3** (4.8 ft-lb), **CW2** (30 RPM), MTL **30.5**; push 5 lb, turn to HS 21. Tighten **cinches H14 and H16** **PGT**, 7/16-6-in ext; **RCW**, MTL **30.5**; 3/8 turn 22. Verify anti-rotation device is up; if not, rotate bolt cw until up, max 60 deg (x2)

S6 RADIATOR MANUAL OVERRIDE TO DEPLOY/RETRACT – TASK DATA

Estimated Task Duration:

	With RMS	Without RMS
One EV Crew	N/A	00:30 (E)
Two EV Crew	N/A	01:30 I

Tools:

EV1	EV2
PGT	PGT
7/16-6-in ext	7/16-6-in ext
APFR	
RET	

EVA Fasteners:

Fastener Name	Label	Head Size	Qty	Install Torque (ft-lb)	Max Break Away Torque (ft-lb)	Failure Torque (ft-lb)	Turns	RPM
PVR MDA	H32	7/16-in	1	12.0	19.1*	25.2	45-50	30
Cinch bolts	H11-H12	7/16-in	2	4.8	15.8	35.7	8-14	30
Cinch bolts	H13-H16	7/16-in	4	4.8	24.6	39.7	8-14	30
FQDC Shroud bolts	H5, H6, H8, H9	7/16-in	4	9.2	6.7	21.2 I 18.1 (I)	7	30
Winch bolt	H10	7/16-in	1	2.5	4.4*	6.4	25 I 20 (I)	30

***Indicates Max On-Orbit Installation Torque**

EVA Connectors:

Harness	From	To	Clamps (#)	Conn Size	Function
N/A					

Foot Restraints:

Task	WIF	APFR Setting
PVR MDA worksite	S6 – 16	(5,PP,E,1)

Mass: N/A

Notes:

1. Free drift or CMG Control with Thrusters Disabled is required while radiator is being deployed/retracted. Applies only while mechanisms are in motion

Cautions:

1. Equipment damage. Avoid contact with radiator bellows
2. Winch mechanism extension may fail due to excess slack if extended beyond 20 turns from launch state, or beyond 25 turns from fully retracted state
3. Avoid putting high axial loads on winch bolt; retaining mechanism for locking device may fail. Still usable if failure occurs, but no locking capability

Warnings:

1. Moving equipment. Avoid contact with panels and mechanisms during extension of radiator

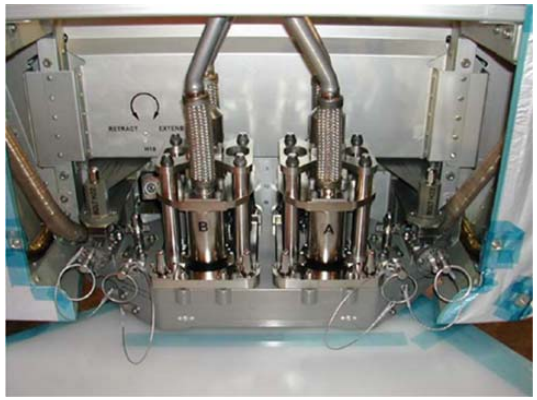

PVR FQDC

S6 RADIATOR MANUAL OVERRIDE TO DEPLOY/RETRACT – TASK DATA (Cont)

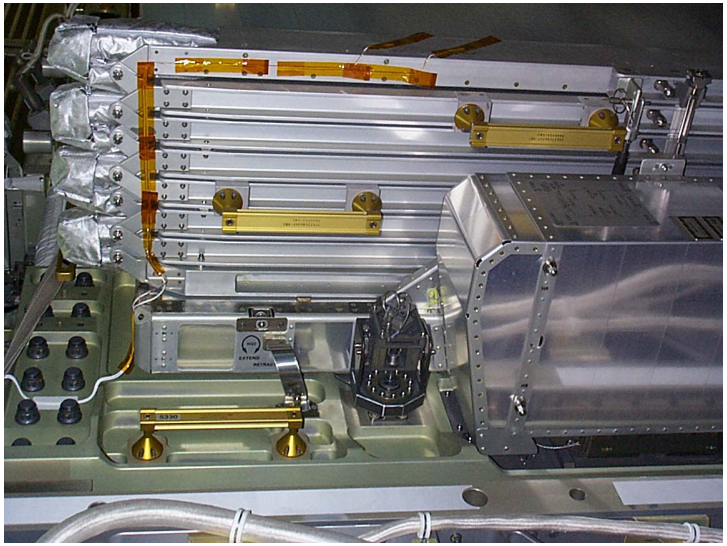

PV Radiator – MDA H32 Fastener Located Near Ground Strap

PV Radiator MDA Fastener

PVR EVA Interfaces

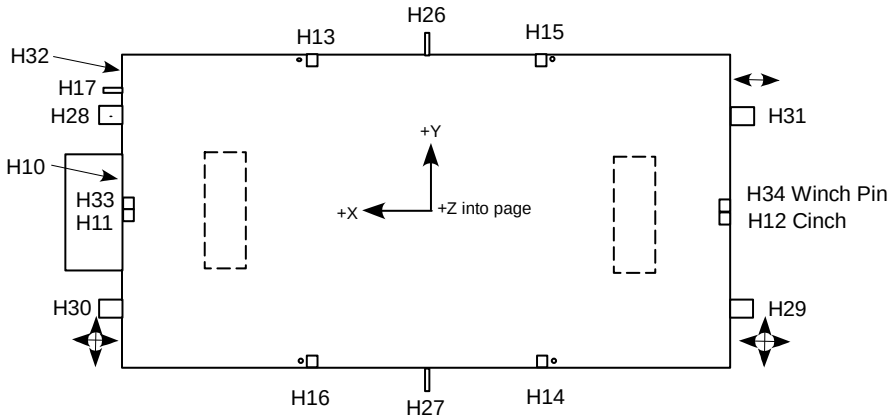

PVR

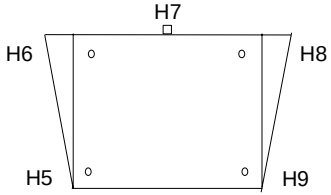

FQDC Shroud

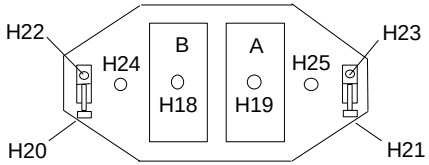

FQDC

H5,6,9,8 = FQDC Shroud Fasteners
H7 = FQDC Shroud Alignment Pin
H10 = Winch Drive
H11- H16 = Cinches
H17 = Grounding Strap
H18 - H19 = FQDC Drive bolts
H20 - H21 = Carrier Slider bolts
H22 - H23 = Carrier to PVR Attach
H24 - H25 = Carrier to IEA Attach
H26 - H27 = Center Bolts
H28 - H31 = Corner Bolts
H32 = Manual Deploy/Retract
H33-H34 = Winch PIP pins

PRD 4-BAR ROUTING

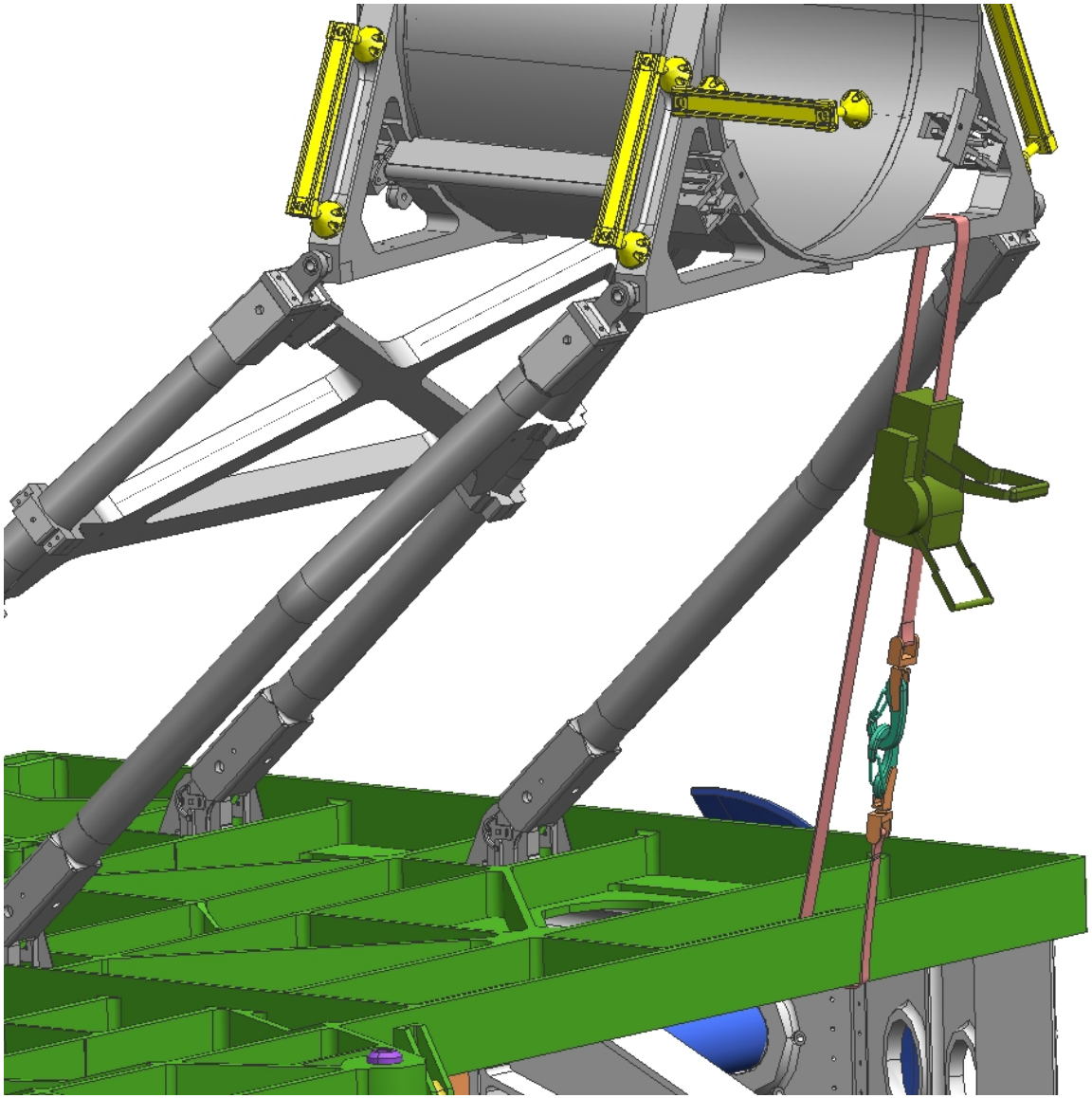

PRD 4-BAR ROUTING (Cont)

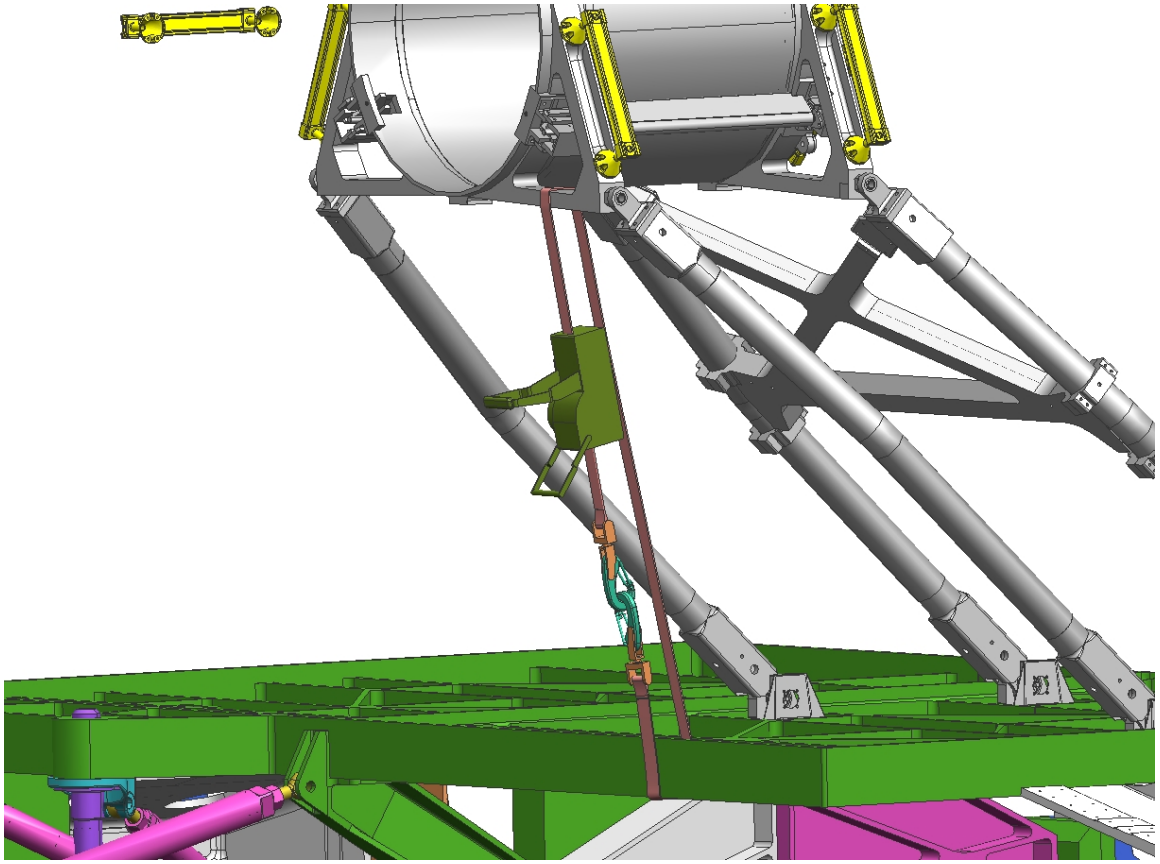

PRD 4-BAR ROUTING (Cont)

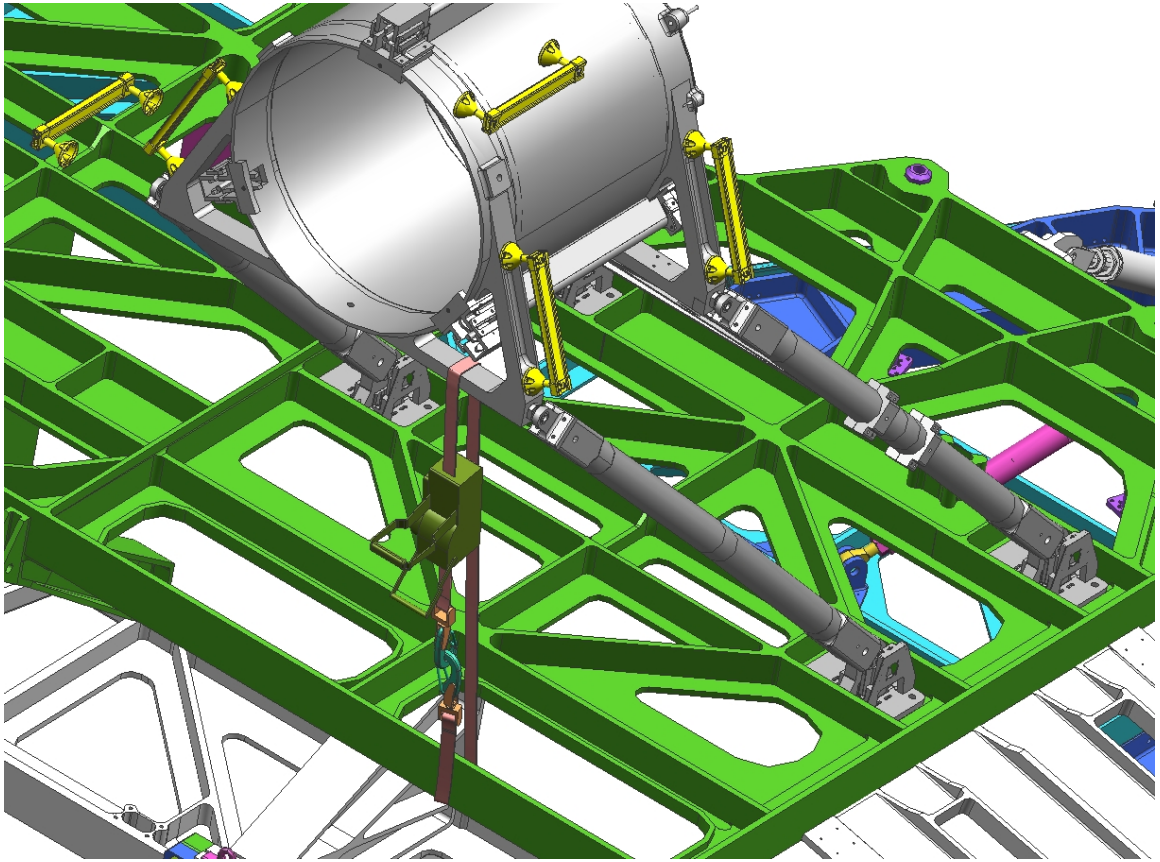

PRD 4-BAR ROUTING (Cont)

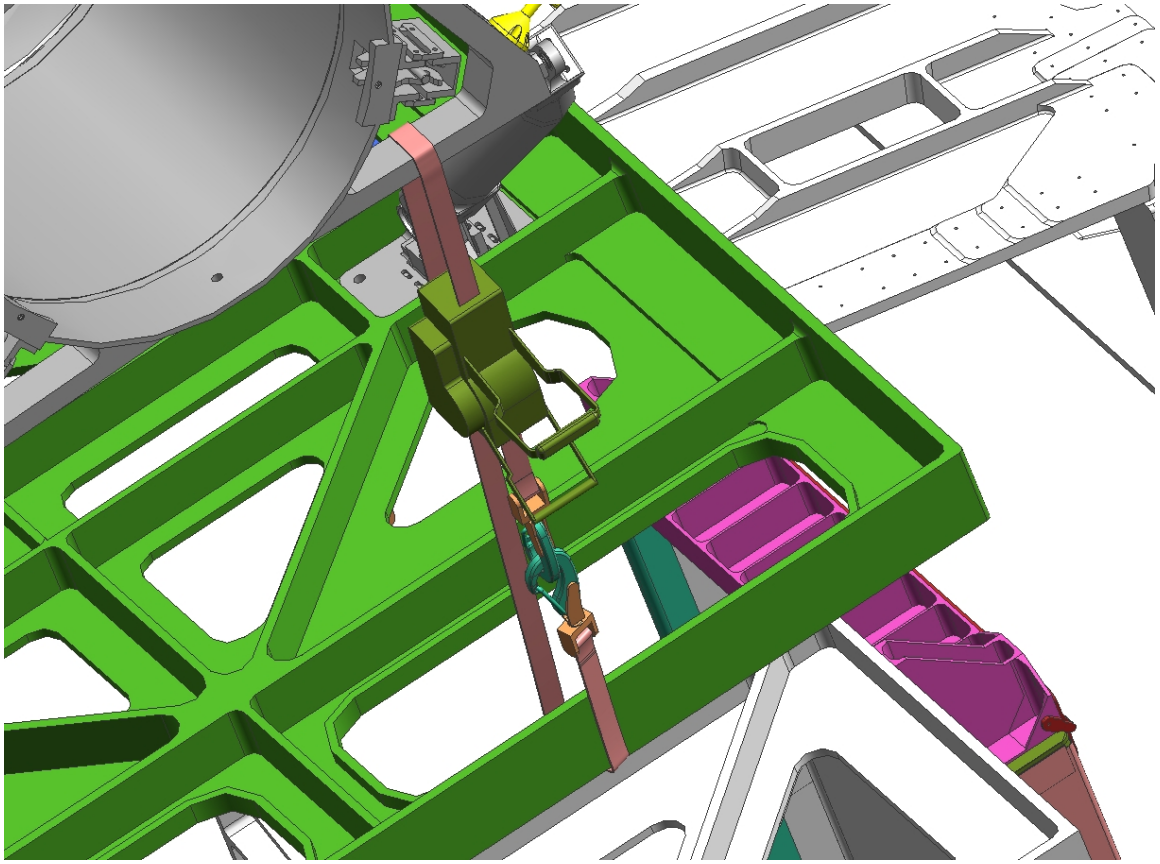

MANUAL OVERRIDE TO DISENGAGE BETA GIMBAL ANTI-ROTATION LATCH (01:00)

TIME (HR:MN)	IV/RMS	EV1	EV2
	MCC-H 1. BGA XX(YY) ANTI-ROTATION LATCH FAIL TO UNLATCH REMOTELY (ISS EPS GENERIC, MALFUNCTION PROCEDURES)	Stbd Tool Box/QD BDT Board: Obtain BMRRM anti-rotation latch tool	
	IV PCS 2. Determine Anti-rotation latch posn S6: EPS: BGA XX(YY) BGA XX(YY) 'ECU XX(YY)' Verify Integ Cnt – Incrementing 'BGA XX(YY)' Record Actual Angle = _____deg Motor State - _____ Latch 1 Pin Status - _____ Latch 2 Pin Status - _____ Refer to BMRRM Anti-Rotation Latch Table to determine beta gimbal anti-rotation latch access hole: Anti-rotation latch posn = (Hole#)	1. √**MCC-H** for APFR setting	S6 could be S4, P4, or P6 depending on failure
01:00	IV PCS 3. √Anti-rotation latch released S6: EPS: BGA 4B(2B) BGA XX(YY) 'ECU XX(YY)' Verify Integ Cnt – Incrementing 'BGA XX(YY)' Verify: Latch 1 Pin Status – Unlatched Latch 2 Pin Status – Unlatched	2. Insert tool into designated beta gimbal hole to depress and release anti-rotation latch. Use indicator mark on tool for correct insertion depth	

BMRRM ANTI-ROTATION LATCH TABLE

Hole	Latch 1 Angle	Latch 2 Angle	Cable Restricts Access		
1	0	267.1875			
2	5.625	272.8125			
3	11.25	278.4375			
4	16.875	284.0625			
5	22.5	289.6875			
6	28.125	295.3125	J1 – Primary Power		
7	33.75	300.9375	J1 – Primary Power		
8	39.375	306.5625	J1 – Primary Power		
9	45	312.1875	J1 – Primary Power		
10	50.625	317.8125			
11	56.25	323.4375			
12	61.875	329.0625			
13	67.5	334.6875			
14	73.125	340.3125			
15	78.75	345.9375			
16	84.375	351.5625			
17	90	357.1875			
18	95.625	2.8125			
19	101.25	8.4375			
20	106.875	14.0625			
21	112.5	19.6875			
22	118.125	25.3125			
23	123.75	30.9375	J4 – 1553 Bus B		
24	129.375	36.5625	J4 – 1553 Bus B		
25	135	42.1875	J4 – 1553 Bus B		
26	140.625	47.8125			
27	146.25	53.4375			
28	151.875	59.0625			
29	157.5	64.6875			
30	163.125	70.3125			
31	168.75	75.9375			
32	174.375	81.5625			
33	180	87.1875			
34	185.625	92.8125			
35	191.25	98.4375			
36	196.875	104.0625			
37	202.5	109.6875			
38	208.125	115.3125			
39	213.75	120.9375			
40	219.375	126.5625			
41	225	132.1875			
42	230.625	137.8125	J2 – Secondary Pwr (RPCM XX A RPC 2)		
43	236.25	143.4375	J2 – Secondary Pwr (RPCM XX A RPC 2)		
44	241.875	149.0625	J2 – Secondary Pwr (RPCM XX A RPC 2)		
45	247.5	154.6875			
46	253.125	160.3125			
47	258.75	165.9375			
48	264.375	171.5625			
49	270	177.1875			
50	275.625	182.8125			
51	281.25	188.4375	J3 – 1553 Bus A and Sec Pwr (RPCM XX A RPC 1)		
52	286.875	194.0625	J3 – 1553 Bus A and Sec Pwr (RPCM XX A RPC 1)		
53	292.5	199.6875	J3 – 1553 Bus A and Sec Pwr (RPCM XX A RPC 1)		
54	298.125	205.3125			
55	303.75	210.9375			
56	309.375	216.5625			
57	315	222.1875			
58	320.625	227.8125			
59	326.25	233.4375			
60	331.875	239.0625			
61	337.5	244.6875			
62	343.125	250.3125			
63	348.75	255.9375			
64	354.375	261.5625			

MANUAL RELEASE OF SABB RESTRAINT PINS

IV	EV
1. Position applicable BGA to angle per Task Data page 2. Secure BGA 3. Give EV crew GO to enter worksite	WARNING Sharp edge/pinch point/entrapment hazard: Avoid contact with outboard underside of SABB due to exposed reels, guide-wire and tension mechanisms Collision hazard: BRS Pin will extend ~1 inch from bottom of box when fired. Keep EMU and tools out of this area CAUTION Actuation of BRS trigger with probe tool should not require excessive force. Application of excessive force may damage the BRS pin tool 1. Set up and ingress APFR (see Task Data page) 2. Induce sharp rap(s) to side of BRS pin housing with the hammer to release 3. If no joy, use the BRS pin release tool to actuate the trigger in the direction indicated by the arrow

MANUAL RELEASE OF SABB RESTRAINT PINS – TASK DATA

Estimated Task Duration:

	With RMS	Without RMS
One EV Crew	N/A	01:00
Two EV Crew	N/A	N/A

Tools:

EV1	EV2
APFR	N/A
Ingress aid	
BRS Pin Contingency Tool	
Hammer	

EVA Fasteners:

Fastener Name	Label	Head Size	Qty	Install Torque (ft-lb)	Release Torque (ft-lb)	Failure Torque (ft-lb)	Turns	RPM
N/A								

EVA Connectors:

Harness	From	To	Clamps (#)	Conn Size	Function
N/A					

Foot Restraints, Right SABB settings are in ( ):

IEA Side	Task	WIF	APFR Setting	BGA Angle
Non-Keel	Left (Right) SABB BRS Pin #1	S4-26, S6-38	12,FF,F,1 (6,FF,G,3)	284 (53)
	Left (Right) SABB BRS Pin #2	S4-26, S6-38	12,FF,F,9 (12,FF,G,3)	265 (78)
	Left (Right) SABB BRS Pin #3	S4-15, S6-27	10,FF,D,9 (9,FF,G,4)	281 (90)
	Left (Right) SABB BRS Pin #4	S4-15, S6-23	3,FF,F,8 (9,GG,G,3)	281 (90)
	Left (Right) SABB BRS Pin #5	S4-15, S6-27	3,FF,F,8 (3,GG,G,3)	281 (90)
	Left (Right) SABB BRS Pin #6	S4-11, S6-23	5,II,F,6 (7,FF,E,10)	281 (95)
	Left (Right) SABB BRS Pin #7	S4-11, S6-23	9,JJ,E,7 (7,KK,F,5)	281 (101)
Keel	Left (Right) SABB BRS Pin #1	S4-25, S6-37	12,FF,F,1 (6,FF,G,3)	284 (53)
	Left (Right) SABB BRS Pin #2	S4-25, S6-37	12,FF,F,9 (12,FF,G,3)	265 (78)
	Left (Right) SABB BRS Pin #3	S4-13, S6-25	10,FF,D,9 (9,FF,G,4)	281 (90)
	Left (Right) SABB BRS Pin #4	S4-13, S6-21	3,FF,F,8 (9,GG,G,3)	281 (90)
	Left (Right) SABB BRS Pin #5	S4-13, S6-27	3,FF,F,8 (3,GG,G,3)	281 (90)
	Left (Right) SABB BRS Pin #6	S4-09, S6-21	5,II,F,6 (7,FF,E,10)	281 (95)
	Left (Right) SABB BRS Pin #7	S4-09, S6-21	9,JJ,E,7 (7,KK,F,5)	281 (101)

Notes:

1. When the trigger is actuated, the slider will slide down and lock the trigger in the actuated position. If the slider has moved down, the BRS pin may be have not fired due to solar array panel side loads
2. If trigger/slider is not in actuated position, trigger must be actuated manually with probe tool
3. Arrows (←) indicate direction of trigger actuation
4. All triggers are on the MDA side of BRS pin
5. Pin 3 is a blind operation, and pins 4, 5 require bending metal for access
6. Some APFR settings have a body position that is rather close to the lower blanket box; in these instances, the ingress aid may be used to control body positioning to avoid hitting the helmet against the SABB

Cautions:

1. Actuation of BRS trigger with probe tool should not require excessive force. Application of excessive force may damage the BRS pin tool

Warnings:

1. Sharp edge/pinch point/entrapment hazard: Avoid contact with outboard underside of SABB due to exposed reels, guide-wire and tension mechanisms
2. Collision hazard: BRS Pin will extend ~1 inch from bottom of box when fired. Keep EMU and tools out of this area

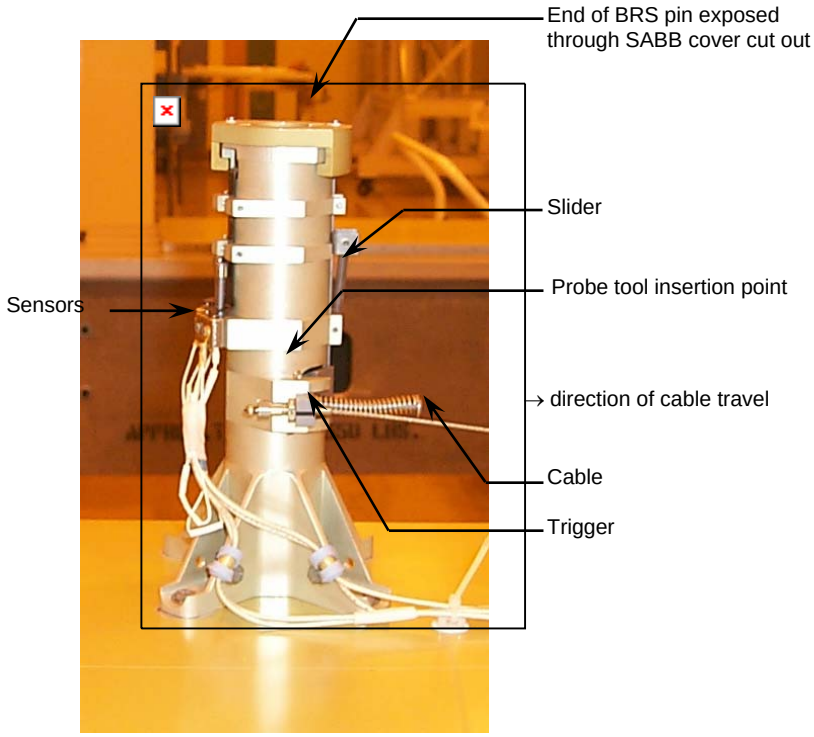
End of BRS pin exposed through SABB cover cut out
Slider
Probe tool insertion point
Sensors
→ direction of cable travel
Cable
Trigger

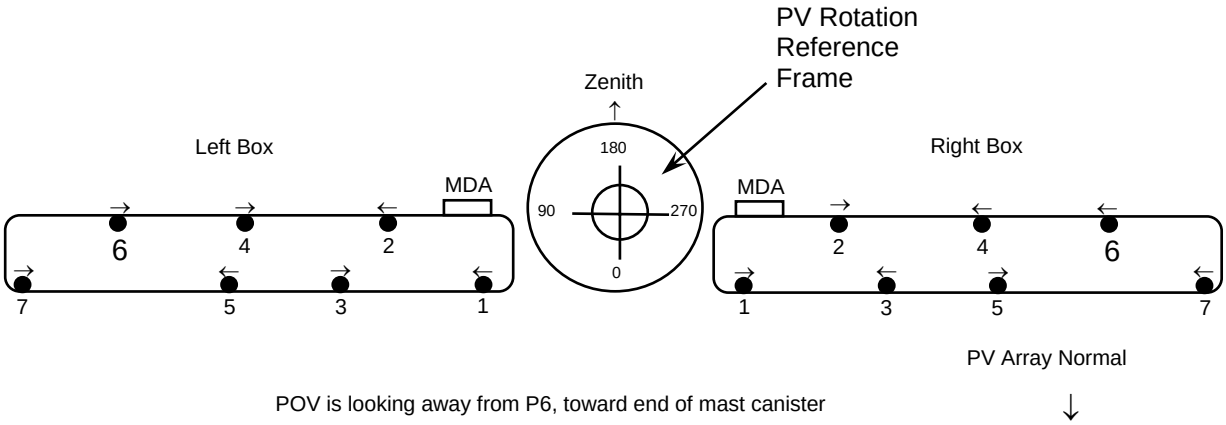
PV Rotation Reference Frame
Zenith
Left Box
Right Box
MDA
MDA
180
90
270
0
6
4
2
7
5
3
1
2
4
6
1
3
5
7
PV Array Normal
POV is looking away from P6, toward end of mast canister

MANUAL OVERRIDE TO UNLATCH/LATCH (TENSION) SABB

IV/RMS

Identify Affected Power Channel XX = _____

IF UNLATCHING SABB

MCC-H 1. Perform {3.190 SAW XX FAILURE TO UNLATCH SABB REMOTELY} (SODF: EPS: MALFUNCTION: PRIMARY POWER)

IV 2. GO for EV crew ingress at worksite

IF TENSIONING SABB

MCC-H 1. Perform {3.193 SAW XX FAILURE TO LATCH (TENSION) SABB REMOTELY} SODF: EPS: MALFUNCTION: PRIMARY POWER)

THEN:

IV 2. If required (see Task Data notes), Verify affected SABB positioned over the IEA and BGA latched

PCS PVM: EPS: BGA XX

BGA XX

'ECU XX'

Verify:

Integ Cnt – Incrementing

'BGA XX'

Verify:

Actual Angle, deg = 270.000 (± 0.5) (Left SABB)

OR

Actual Angle, deg = 90.000 (± 0.5) (Right SABB)

Motor State – OFF

Latch 1 Pin Status – Latched

IV 3. GO for EV crew ingress at worksite

NOTE

Free Drift or CMG Control with Thrusters Disabled is required while SABB is being unlatched/latched. Applies only while mechanisms are in motion

MCC-H 4. Configure ISS/Orbiter attitude control to CMG Control with thrusters disabled

IV 5. When task complete, give **MCC-H** GO to resume nominal attitude control

EV

WARNING

Sharp edge/pinch point/entrapment hazard – Avoid contact with outboard underside of SABB due to exposed reels, guide-wire and tension mechanisms

Avoid contact with blanket box latches during manual override operation

CAUTION

Maintain a constant push force (3-10 lb) on the MDA fastener anti-rotation collar during fastener rotation

MANUAL OVERRIDE TO UNLATCH SABB

1. On IV GO (see IV column, Unlatching SABB, step 2) – Enter worksite area
2. If required, APFR, setup and ingress (see Task Data for WIF position, APFR settings, and BGA angle)
3. Release PIP pin from back-up position lever
4. Move override lever to MANUAL position
5. Insert PIP pin into lock lever position
6. Drive **MDA drive fastener**
   PGT, 7/16-2-in ext; **A6** (8.3 ft-lb), **CCW2** (30 RPM), MTL **30.5**; push to engage (3-10 lb), 48 ± 1 turns until visual indication of latch position or HS
7. Release PIP pin from override positioning lever
8. Move override lever to AUTOMATIC position
9. Insert PIP pin into lock lever position
10. Drive **MDA drive fastener** (opposite direction)
    PGT 7/16-2-in ext; **RCW**, MTL **30.5**; Push to engage (3-10 lb), ¼ turn to engage clutch pins

MANUAL OVERRIDE TO TENSIONING SABB

1. On IV GO (see IV column, Tensioning SABB, step 3), Enter worksite area
2. If required, APFR, setup and ingress (see Task Data for WIF position, APFR settings, and BGA angle)
3. Release PIP pin from back-up position lever
4. Move override lever to MANUAL position
5. Insert PIP pin into lock lever position
6. Drive **MDA drive fastener**
   PGT, 7/16-2-in ext; **A6** (8.3 ft-lb), **CW2** (30 RPM), MTL **30.5**; push to engage (3-10 lb), 48 ± 1 turns until visual indication of latch position or HS. The latches along the blanket box are visible and will move to the engaged position
7. Release PIP pin from override positioning lever
8. Move override lever to AUTOMATIC position
9. Insert PIP pin into lock lever position
10. Drive **MDA drive fastener** (opposite direction)
    PGT 7/16-2-in ext; **RCCW**, MTL **30.5**; Push to engage (3-10 lb), ¼ turn to engage clutch pins

MANUAL OVERRIDE TO UNLATCH/LATCH (TENSION) SABB – TASK DATA

Estimated Task Duration:

	With RMS	Without RMS
One EV Crew	N/A	00:30
Two EV Crew	N/A	N/A

Tools:

EV1	EV2
PGT	N/A
7/16-2-in ext	

EVA Fasteners:

Fastener Name	Label	Head Size	Qty	Install Torque (ft-lb)	Max Break Away Torque (ft-lb)	Failure Torque (ft-lb)	Turns	RPM
SABB MDA Fastener	Yes	7/16-in	1 per	N/A	7.5	12	48	30

EVA Connectors:

Harness	From	To	Clamps (#)	Conn Size	Function
N/A					

Foot Restraints:

Task	WIF	APFR Setting	BGA Angle
IEA Non-keel side – Right SABB	P4/S4-26; P6/S6-38	(12,FF,F,3)	90
IEA Non-keel side – Left SABB	P4/S4-26; P6/S6-38	(12,FF,E,9)	270
IEA Keel side – Right SABB	P4/S4-25; P6/S6-37	(12,FF,F,3)	90
IEA Keel side – Left SABB	P4/S4-25; P6/S6-37	(12,FF,E,9)	270

Mass: N/A

Notes:

1. It has been demonstrated in the NBL that the EVA crewmember can access the SABB Manual Override Fastener from a free floating position on the mast canister. If the EVA crew thinks they can actuate the SABB Manual Override Fastener from a free floating position on the mast canister, there is no need to position the BGA per IV step 2
2. Free Drift or CMG Control with Thrusters Disabled is required while SABB is being unlatched/latched. Applies only while mechanisms are in motion

Cautions:

1. Equipment damage – Maintain a constant push force (3-10 lb) on the MDA fastener anti-rotation collar during fastener rotation. Damage to the locking collar and/or the fastener could result if the collar is allowed to extend during fastener rotation
2. Equipment damage – Avoid contact with blanket box latches and mechanisms on underside of blanket box

Warnings:

1. Sharp edge/pinch point/entrapment hazard – Avoid contact with outboard underside of SABB due to exposed reels, guide-wire and tension mechanisms
2. Moving equipment. Avoid contact with blanket box latches during manual override operation

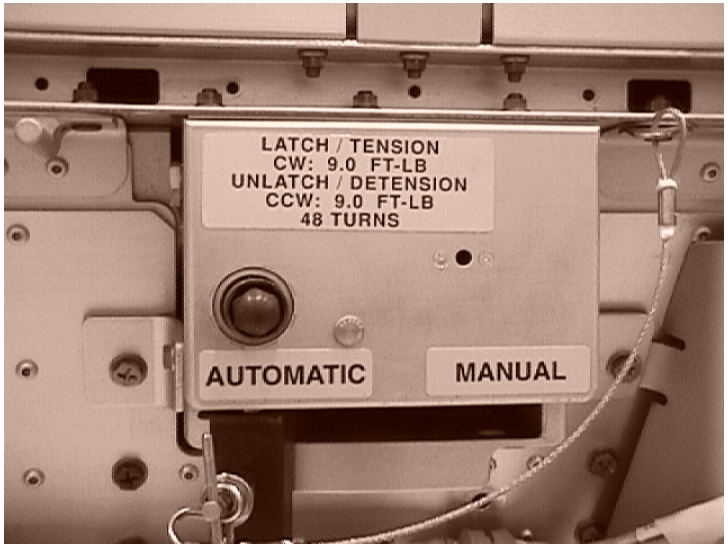

SABB MDA

MANUAL OVERRIDE TO EXTEND/RETRACT MAST

IV	EV
Identify Affected Power Channel XX = _____ **MCC-H** 1. Perform {3.191 SAW XX FAILURE TO EXTEND MAST REMOTELY} (SODF: EPS: MALFUNCTION: PRIMARY POWER) OR Perform {3.192 SAW XX FAILURE TO RETRACT MAST REMOTELY} (SODF: EPS: MALFUNCTION: PRIMARY POWER) IV 2. Verify affected SABB positioned over the IEA and BGA latched PCS PVM: EPS: BGA XX BGA XX 'ECU XX' Verify: Integ Cnt – Incrementing 'BGA XX' Verify: Actual Angle, deg = 180.000 (+/- 0.5) Motor State – OFF Latch 1 Pin Status – Latched IV 3. GO FOR EV CREW INGRESS AT WORKSITE NOTE Free Drift or CMG Control with Thrusters Disabled is required while solar array is being deployed/retracted. Applies only while mechanisms are in motion **MCC-H** 4. Configure ISS/Orbiter attitude control to CMG Control with thrusters disabled	WARNING Sharp edge/pinch point/entrapment hazard – Avoid contact with outboard underside of SABB due to exposed reels, guide-wire and tension mechanisms Avoid contact with blanket box latches during manual override operation MANUAL OVERRIDE TO EXTEND MAST CAUTION If excessive blanket panel "stiction" occurs during mast deployment, perform contingency incremental deployment 1. On IV GO (see IV column, step 3), enter worksite area 2. Set up and ingress APFR (see Task Data page) 3. If reqd, Deploy MCHD PGT swing arm, install MCHD onto mast canister, zip nuts (4) 4. If reqd, secure **MCHD fasteners** (4) **PGT**, 7/16-2-in ext; **A5** (7.0 ft-lb), **CW2** (30 RPM), MTL **30.5**; to HS 5. Rotate **Manual Override Actuator Shaft** on left side of MDA **Ratchet, 7/16-2-in ext; cw**; 180 deg to disengage MDA, √indicator – MANUAL 6. If reqd, place PGT in MCHD PGT swing arm CAUTION Crew must monitor the tension bar. Stop SAW deployment if the tension bar rises more than 1.5 inches from the sill. Drive MDA EVA override fastener until tension bar returns to 1.5 inches from the sill: PGT, 7/16-2 in ext; A7 (9.2 ft-lb), CW3 (60 RPM), MTL 30.5. When panels release and tension bar returns to the sill, deployment can continue NOTE Insolation is not required for this task, unless needed for visual abort cues. As expected, the tension bar will rise 18 to 20 inches from the sill as the last half mast bay is deployed. Extension complete when: Visual observation of the last mast bay visual indicators (black/white, cross hatched). Hard stop, sharp rise in tool torque. If reqd, off-load drive shaft with IVA pipe wrench. Apply load from the right to the left above the torsion spring in the coupler. Switch to manual mode while holding torque on the coupler 7. Drive **MDA EVA override fastener** **PGT**, 7/16-2-in ext; **A7** (9.2 ft-lb), **CCW3** (60 RPM), MTL **30.5**; ~78 turns until 1 mast bay is deployed 8. Give **MCC-H** GO to place solar array blanket boxes in high tension

MANUAL OVERRIDE TO EXTEND/RETRACT MAST (Cont)

IV	EV
MCC-H 5. On EV GO (see EV column, Extend Mast, step 8), place solar array blanket boxes in high tension, when complete, give EV GO to continue SAW deployment	
	9. On **MCC-H** GO (see IV column, step 5), drive **MDA EVA override fastener** **PGT**, 7/16-2-in ext; **A7** (9.2 ft-lb), **CCW3** (60 RPM), MTL **30.5**; 2382 turns (x1 PGT battery will actuate approx 1300 turns), PGT battery changeout expected
MCC-H 6. On EV GO – resume nominal attitude control	10. While holding the **PGT with 7/16-2-in ext** on the backup drive fastener, **Ratchet with 7/16-2-in ext –** rotate Manual Override Actuator Shaft 180 to disengage MDA, indicator – AUTOMATIC 11. Give **MCC-H** GO to resume nominal attitude control 12. Egress worksite, if utilized, leave MCHD on mast canister
	<u>MANUAL OVERRIDE TO RETRACT MAST</u> 1. On IV GO (see IV column, step 3), Enter worksite area 2. Set up and ingress APFR (see Task Data page) 3. If reqd, deploy MCHD PGT swing arm, install MCHD onto mast canister, zip nuts (4) 4. If reqd, secure MCHD fasteners (4) **PGT**, 7/16-2-in ext; **A5** (7.0 ft-lb), **CW2** (30 RPM), MTL **30.5**; to HS 5. Rotate manual override actuator shaft on left side of MDA **Ratchet, 7/16-2-in ext; cw**; 180 deg to disengage MDA, √indicator – MANUAL 6. If reqd, place PGT in MCHD PGT swing arm 7. Drive MDA EVA override fastener **PGT**, 7/16-2-in ext; **A7** (9.2 ft-lb), **CW3** (60 RPM), MTL **30.5**; 2460 turns (x1 PGT battery will actuate approx 1300 turns), PGT battery changeout expected 8. While holding the **PGT with 7/16-2-in ext** on the backup drive fastener, **Ratchet with 7/16-2-in ext –** rotate Manual Override Actuator Shaft 180 deg to disengage MDA, indicator – AUTOMATIC 9. Give **MCC-H** GO to resume nominal attitude control 10. Egress worksite, if utilized, leave MCHD on mast canister

MANUAL OVERRIDE TO EXTEND/RETRACT MAST – TASK DATA

Estimated Task Duration:

	With RMS	Without RMS
One EV Crew	N/A	02:00
Two EV Crew	N/A	N/A

Tools:

EV1	EV2
PGT with 7/16-2-in ext	N/A
Ratchet wrench with 7/16-2-in ext	
If reqd, MCHD	
APFR	

EVA Fasteners:

Fastener Name	Label	Head Size	Qty	Install Torque (ft-lb)	Max Break Away Torque (ft-lb)	Failure Torque (ft-lb)	Turns	RPM
MCHD Fasteners	N/A	7/16-in	4	7.0	8.1	11.0 (I) 12.2 (R)	Zip	10
Mast Canister Manual Override Actuator Shaft	Yes	7/16-in	2 per	N/A	2.5	10	0.5	10
Mast Canister MDA Fastener	Yes	7/16-in	1 per	N/A	9.0	19.3	2461	60

EVA Connectors:

Harness	From	To	Clamps (#)	Conn Size	Function
N/A					

Foot Restraints:

Task	WIF	APFR Setting
IEA Keel Side	P6/S6-37, P4/S4-25	(12,FF,F,12)
IEA Non-keel side	P6/S6-38, P4/S4-26	(12,FF,F,12)

Mass: N/A

Notes:

1. Insolation is not required for this task, unless needed for visual abort cues. As expected, the tension bar will rise 18 to 20 inches from the sill as the last half mast bay is deployed
2. Extension complete when: Visual observation of the last mast bay visual indicators (black/white, cross hatched). Hard stop, sharp rise in tool torque
3. The mast canister needs to be positioned such that the MDA faces the direction of the IEA. This will allow an EV crewmember to set up an APFR to access the MDA
4. In order to release MCHD fasteners from zipnuts, inward force on each bolt must be minimized

Cautions:

1. Crew must monitor the tension bar. Stop SAW deployment if the tension bar rises more than 1.5 inches from the sill. Drive MDA EVA override fastener until tension bar returns to 1.5 inches from the sill. When panels release and tension bar returns to the sill, deployment can continue
2. Equipment damage – Avoid contact with blanket box latches and mechanisms on underside of blanket box
3. If monitoring IVA notes excessive blanket panel "stiction", during mast deployment, abort deployment. Coordinate with IVA to perform contingency incremental deploy. Not applicable for retraction

Warnings:

1. Sharp edge/pinch point/entrapment hazard – Avoid contact with outboard underside of SABB due to exposed reels, guide-wire and tension mechanisms
2. Moving equipment. Avoid contact with blanket box latches during manual override operation

Mast Canister MDA

ASSISTED SOLAR ARRAY DEPLOY/RETRACT

WARNING

1. Sharp edges:
   a. SABB (skirt, swing bolts)
   b. Solar cells
   c. Springs along tension bar
   d. Panel hinges
   e. Guide cable burrs or frays
   f. Mast Canister roller guides
   g. Braided cables
   h. Fastener exposed threads
   i. Exposed bolts in rib cavities on mast canister
2. Shock hazard:
   a. Avoid EMU contact with FCC and Kapton part of solar array panels
   b. EV crew will only contact energized surfaces with approved tools that have been insulated with Kapton tape to prevent molten metal and shock
   c. Solar array to be manipulated will be shunted prior to EV crew entering worksite
3. Pinch:
   a. Lower SABB exposed reels and pulleys (guide wire and tensioning mechanisms)
   b. Solar array mast during deploy/retraction
4. Avoid inadvertent contact with:
   a. SSU, ECU, beta gimbal platform, mast canister, SAW blanket boxes unless the beta gimbal is locked and the motor is turned off

ASSISTED SOLAR ARRAY DEPLOY/RETRACT (Cont)

IV/SSRMS	EV1	EV2
Deploy Solar Array	ASSISTED DEPLOY 1. Verify glove gauntlets cover wrist disconnects 2. Determine SAW problem (perform full SAW SURVEY FOR DEPLOY below as required) 3. Perform SAW WORKAROUND for problem seen 4. Layback below Mast Canister separation plane, and give GO for deploy 5. Monitor array, call ABORT if problem seen 6. Repeat steps 1 thru 5 as required, translating in or away as required SAW SURVEY FOR DEPLOY (IF REQD) 1. Prior to deploy, perform SABB/SAW survey to verify the following: ❑ Tension reels are spooled (2 per SABB) ❑ No slack in tension cables (2 per SABB) ❑ Center, outboard guide wires run through pulleys and reels (3 per SABB, but cannot check inboard guide wire due to cover) ❑ Center, outboard guide wire not rubbing against power cable (3 per SABB, but cannot check inboard guide wire due to cover) ❑ No slack in guide wires (3 per SABB)	
Retract Solar Array Retract Solar Array	ASSISTED RETRACT 1. Verify glove gauntlets cover wrist disconnects 2. Determine SAW problem (perform full INITIAL SAW SURVEY PRIOR TO RETRACT below as reqd) 3. Perform SAW WORKAROUND for problem seen 4. Layback below Mast Canister separation plane, and give GO for retract 5. Monitor array, call ABORT if problem seen 6. Repeat steps 1 thru 5 as reqd, until 1 bay out 7. Perform 1 BAY OUT SAW SURVEY DURING FINAL RETRACT 8. Give IV GO for final bay retraction 9. Verify guide wires remain tight and grommets are not caught between panels 10. If latching to be performed, verify latches aligned and within reach of latch pins on upper blanket box INITIAL SAW SURVEY PRIOR TO RETRACT (IF REQD) 1. Prior to retract, perform SABB/SAW survey to verify the following: ❑ Y-guides (4 per SABB) should not be visible ❑ Center, outboard guide wire not rubbing against power cable ❑ Foam pads in SABB base (7 per SABB) not overlapping and appear seated in original location (look through leaders) 1 BAY OUT SAW SURVEY DURING FINAL RETRACT 1. Perform SABB/SAW survey to verify the following: ❑ Blanket fully contained within blanket box ❑ Outboard STE loops neatly stacked within goal posts ❑ Upper blanket box cover guide pins/alignment tabs aligned with goal posts ❑ Guide wires (3 per SABB) retracted with no slack	

IV/SSRMS	EV1	EV2
	SAW WORKAROUND **Over-center Hinge Reset:** A. Use cheater bar to press metal panel hinge into normal configuration; avoid contact with guide wire **Uneven Panel Distribution (causes stuck grommets during retract):** B. Get as close as possible to lower blanket box near center guide wire on affected solar array C. Use TPS scraper or cheater bar to evenly distribute panel folds along array (fluff); avoid contact with guide wire **Stuck Grommet:** 1. NOTE Provided a fray is not causing the grommet fault, panel fluffing near center guide wire will likely clear problems at all three guide wires If guide wire fray NOT suspected: D. Get as close as possible to affected panel near center guide wire E. Use TPS scraper or cheater bar to evenly distribute panel folds (fluff); avoid contact with guide wire F. If no joy; perform steps as if guide wire fray suspected If guide wire fray is suspected: G. Use TPS scraper or cheater bar to free grommet; repeat as necessary for lower panel grommets as guide wire fray retracts If bunching of panels above ~11.5 bays is seen (known fray): H. IV retract to the '12 bays deployed' configuration 2. NOTE If grommets are difficult to see, grommets are located on all outward folds (relative to EV crew), so folds can be counted. Procedure assumes fray is between 16th and 17th grommet, although it is possible that fray is between 15th and 16th grommet I. Pull grommets down using TPS scraper (or other tool) until 16 grommets above fray, remainder below fray J. IV re-attempt deploy **Guide Wire Slack Due to Reel/Pulley Jam:** CAUTION Guide wire can jump out of pulley track, attempt cable manipulation from inside blanket box first. If guide wire must be handled from outside of blanket box, avoid pulling guide wire to side of pulley plane K. Verify all grommets on affected guide wire are loose L. Use needle nose pliers to pull cable out of reel; allow cable to retract **Out of Plane Panels or Guide Wire Slack after Retract:** M. Perform steps for stuck grommet N. If no joy; GCA SSRMS (if available) to goal posts of affected blanket O. Use gloved hand to realign STE loops between goal posts; avoid contact with FCC **Y-Guide Reset** P. Verify SABB is unlatched (low tension) Q. Use BRS Pin Tool on short skirt stiffener to lift tension bar; TPS scraper can be used assist with tension bar manipulation R. Lower tension bar on to Y-guide **Leader Disconnected from Tension Bar** S. If spring not connected to leader, inspect tension bar for spring condition and determine if it will interfere with latching T. If spring still connected to leader, use needle nose pliers to retain loose piece and cut leader with EVA scissors; stow in trash U. If spring needs to be cut from tension bar, use needle nose pliers to retain loose piece and cut spring with compound cutters; stow in trash	

ASSISTED SOLAR ARRAY DEPLOY/RETRACT – TASK DATA

Estimated Task Duration:

	With RMS	Without RMS
One EV Crew	N/A	N/A
Two EV Crew	As long as it takes	As long as it takes

Tools:

EV1	EV2
APFR	Crewlock Bag
Cheater Bar with 1.5-in bail drive lever	Digital Camera
Needle Nose Pliers	BRT
Compound Cutters	
Loop Pin Puller	
TPS Scraper	
BRS Pin Tool	
EVA Scissors	

EVA Fasteners:

Fastener Name	Label	Head Size	Qty	Install Torque (ft-lb)	Release Torque (ft-lb)	Failure Torque (ft-lb)	Turns	RPM
N/A								

EVA Connectors:

Harness	From	To	Clamps (#)	Conn Size	Function
N/A					

Foot Restraints:

Task	WIF	APFR Setting

Notes:

1. Provided a fray is not causing the grommet fault, panel fluffing near center guide wire will likely clear problems at all three guide wires

Cautions:

1. Guide wire can jump out of pulley track, attempt cable manipulation from inside blanket box first. If guide wire must be handled from outside of blanket box, avoid pulling guide wire to side of pulley plane

Warnings:

1. Sharp edge/pinch point/shock hazard: Avoid EMU contact with the following:
   - Lower SABB exposed reels and pulleys (guide wire and tensioning mechanisms)
   - SABB skirt
   - Swing bolts
   - Springs on tension bar
   - Panel hinges
   - Guide wire frays
   - Braided cables
   - Fastener exposed threads
   - Exposed bolts in rib cavities on mast canister
   - Mast roller guides
   - FCC and Kapton part of solar array panels

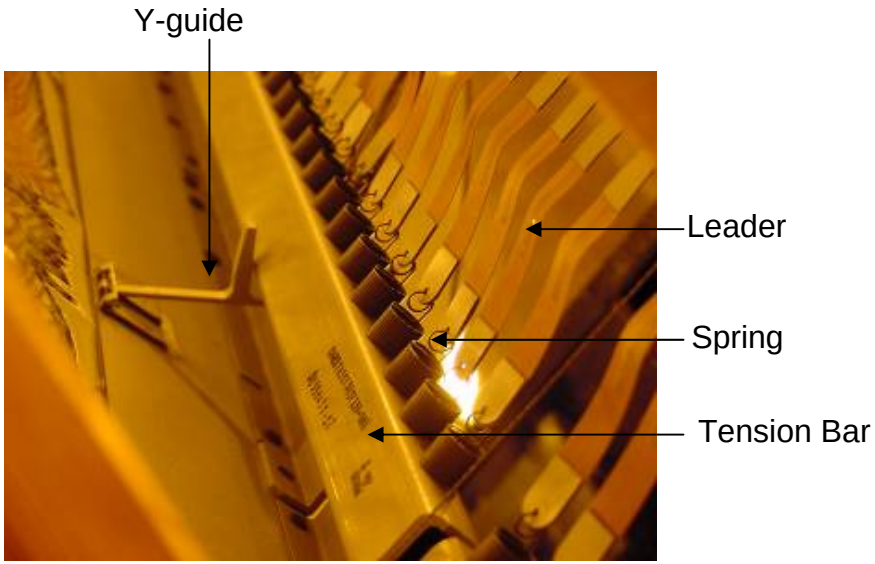

ASSISTED SOLAR ARRAY DEPLOY/RETRACT – TASK DATA (Cont)

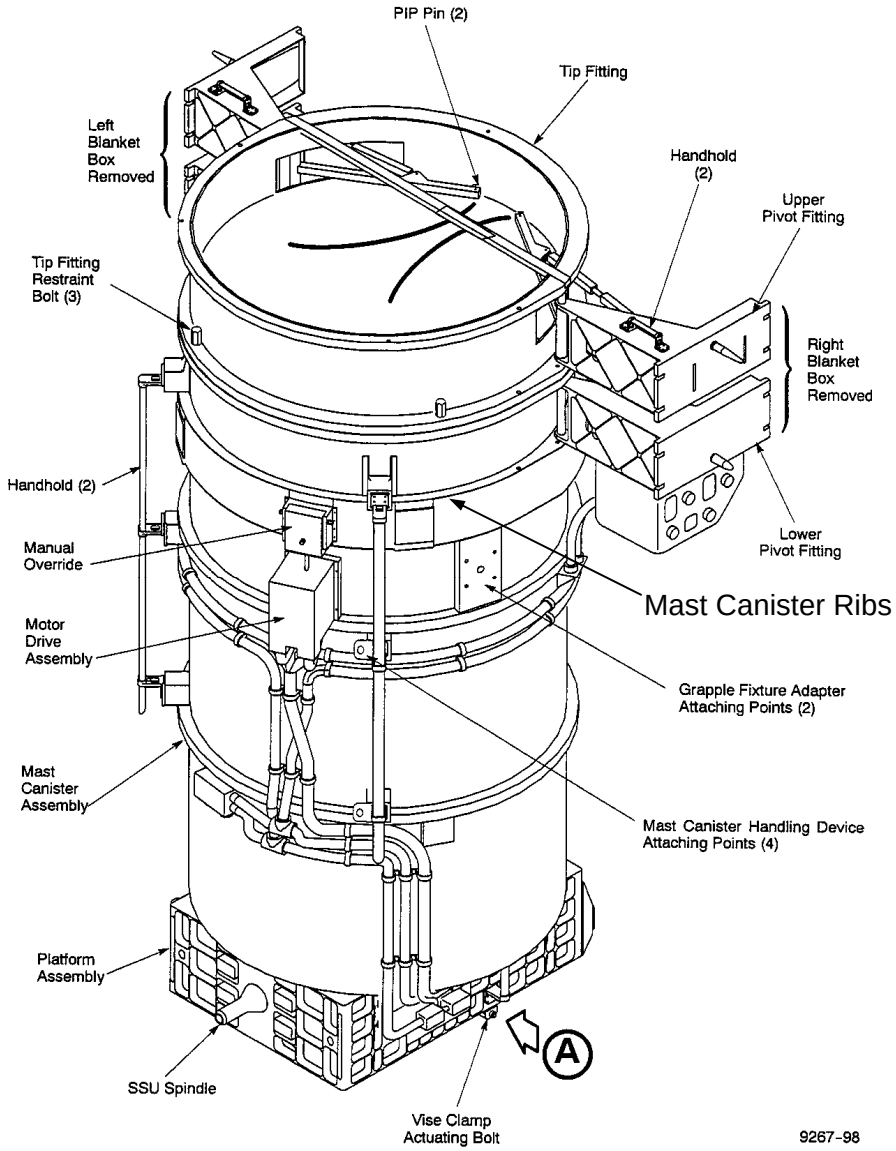

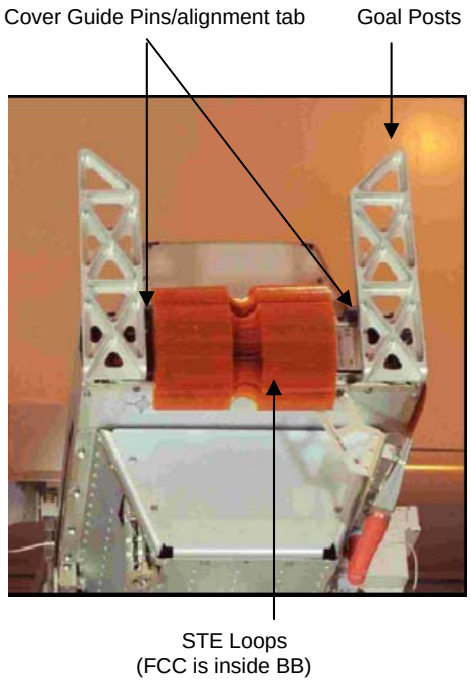

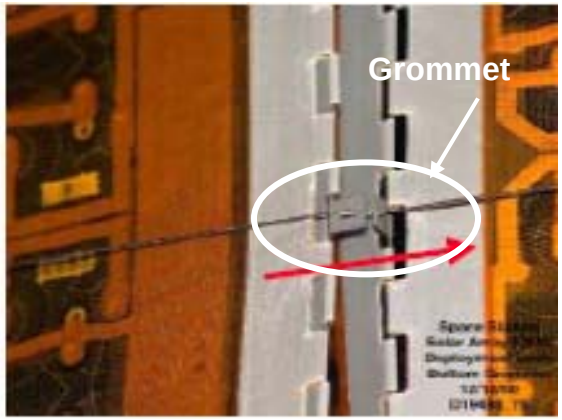

ASSISTED SOLAR ARRAY DEPLOY/RETRACT – TASK DATA (Cont)

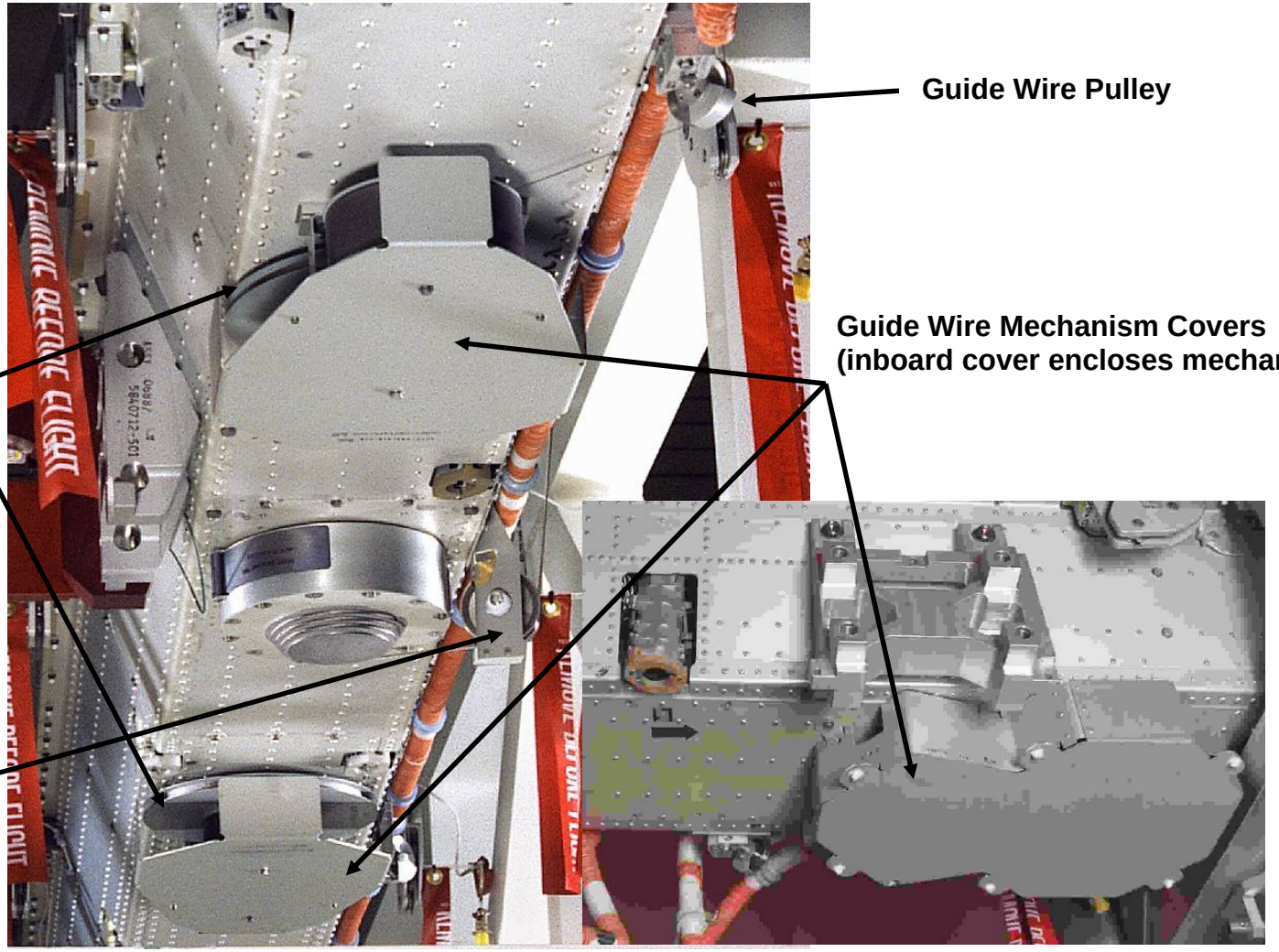

SABB SPOOL RE-TENSION

IV/RMS	EV1	EV2
Identify Affected Power Channel XX = _____ Which SABB needs re-tensioning _____ Which Tension Reel needs re-tensioning _____ IV 1. Retract Affected SAW approx 1 mast bay only if Mast is fully deployed PCS PVM: EPS: SAW XX SAW 'Mast' sel Mast Commands SAW XX Mast **cmd** Mast – Retract Arm **cmd** Mast – Retract Wait approx 20 sec (~ 1 bay) **cmd** Mast – Abort √MDA Voltage, V < 10 (± 2.8) 2. Unlatch affected SABB. If required: Perform {1.3.450 SAW XX SABB INITIAL UNLATCH} (SODF: EPS: ACTIVATION AND CHECKOUT: CHANNEL ACTIVATION), step 2 for LBB or step 3 for RBB (NOTE: BRS Pin visual checks can be ignored) **MCC-H** 3. Position and safe SAW for Tension Reel Task. Perform {2.101 PVM BGA XX ENGAGE ANTIROTATION LATCH} (SODF: EPS: NOMINAL: PRIMARY POWER), using the following values: If Right SABB (Inboard Reel) BGA XX Cmded Angle = 80.000 deg BGA XX Latch Select = 1 If Right SABB (Outboard Reel) BGA XX Cmded Angle = 93.000 deg BGA XX Latch Select = If Left SABB (Inboard Reel) BGA XX Cmded Angle = 285.000 deg BGA XX Latch Select = 2 If Left SABB (Outboard Reel) BGA XX Cmded Angle = 283.000 deg BGA XX Latch Select = 1	WARNING Moving equipment hazard. Stay clear of SABB and capture latch mechanisms Moving equipment hazard. Avoid contact with mast canister/beta gimbal during rotation of SAW Sharp edges: Pulley shroud at machined edges Guide wire mechanism cover at machined edges Guide wire mechanism Guide wire pulley Guide wire Top flange of blanket box Protrusions (4) on tension reel housing TENSION REEL TASK SETUP 1. Translate to S6 2. Set up APFR (see Task Data page) 3. Ingress APFR	WARNING Moving equipment hazard. Stay clear of SABB and capture latch mechanisms Moving equipment hazard. Avoid contact with mast canister/beta gimbal during rotation of SAW Sharp edges: Pulley shroud at machined edges Guide wire mechanism cover at machined edges Guide wire mechanism Guide wire pulley Guide wire Top flange of blanket box Protrusions (4) on tension reel housing TENSION REEL TASK SETUP 1. Translate to S6 2. Set up APFR (see Task Data page) 3. Ingress APFR using EV 1 ingress aid or EV 1 for assistance

SABB SPOOL RE-TENSION (Cont)

IV/RMS	EV1	EV2
IV 4. SSRMS: SSRMS RECONFIGURATION FOR EVA SUPPORT (SODF: ROBO PROCEDURE REFERENCE) 5. SRMS: SRMS RECONFIGURATION FOR EVA SUPPORT (FDF: PDRS PROCEDURE REFERENCE) NOTE Free Drift or CMG Control with Thrusters Disabled is required while the EV crewmembers are handling the cable **MCC-H** 6. Configure ISS/Orbiter attitude control to CMG control with thrusters disabled IV 7. When task complete, give **MCC-H** GO to resume nominal attitude control	INSTALL CABLE ON OUTBOARD REEL 1. Assist EV2 with cable as required NOTE The reel will rotate a fraction of a turn without resistance. Some uneven tension and binding may be initially detected as internal mechanism seats. The 2.5 turn count begins when this minimal rotational resistance (approx 2-6 lb) is encountered. The tension reel housing will self tend back to initial position. Hand guidance is required to control rate 2. Rotate tension reel ccw by hand approx 2.5-2.75 turns to hard stop NOTE EV1 acts as the “clutch” on reel in case EV2 lets go. Tension reel housing will self tend back to initial position. Hand guidance is required to control rate of motion 3. Maintain reel and help tend cable during EV2 alignment 4. Inspect final cable routing on tension reel groves, through pulley, and clear of blanket box fasteners 5. Take closeout photos 6. Egress APFR INSTALL CABLE ON INBOARD REEL 1. Set up APFR (see Task Data page) 2. Ingress APFR 3. Repeat INSTALL CABLE ON OUTBOARD REEL for the SABB inboard reel 4. Give IV GO for solar array deploy	INSTALL CABLE ON OUTBOARD REEL NOTE Pull cable on bottom side of blanket box running between pulley and tension reel. There will be approx 2 ft of cable slack. The tension bar will be pulled into position against blanket box 1. Using the loop pin puller, pull slack on tension cable by pulling cable through pulley using light force (expect 5-10 lb pull force. If force is high, contact MCC) 2. Align cable through pulley 3. Maintain cable tension during reel rotation using loop pin puller 4. Feed cable onto reel using loop pin puller as reel rotates back cw under it’s own spring power 5. Remove loop pin puller 6. Egress APFR INSTALL CABLE ON INBOARD REEL 1. Set up APFR (see Task Data page) 2. Ingress APFR using EV1 ingress aid or EV1 for assistance 3. Repeat INSTALL CABLE ON OUTBOARD REEL for the SABB inboard reel

SABB SPOOL RE-TENSION (Cont)

IV/RMS	EV1	EV2
MCC-H 8. Return SAW/BGA to Deploy Position. If reqd: Perform {2.101 PVM BGA XX ENGAGE ANTIROTATION LATCH} (SODF: EPS: NOMINAL: PRIMARY POWER) IV 9. Return to Nominal SAW Deploy Camera configuration (Truss Cameras, PLB Cameras, etc) 10. SSRMS: SSRMS RECONFIGURATION FOR SAW VIEWING (SODF: ROBO PROCEDURE REFERENCE) 11. SRMS: SRMS RECONFIGURATION FOR SAW VIEWING (FDF: PDRS PROCEDURE REFERENCE) **MCC-H** 12. Re-Latch (Tension) Affected SABB If reqd: Perform {1.3.452 SAW XX DEPLOY} (SODF: EPS: ACTIVATION AND CHECKOUT: CHANNEL ACTIVATION) step 13 for LBB, or step 14 for RBB	IF REQD: <u>TENSION REEL JAM CONTINGENCY</u> 1. If no rotational resistance or no hard stop (free spinning), call MCC 2. If excessive force (> 6 lb) or mechanism jam is encountered, go to <u>INSTALL CABLE ON INBOARD REEL</u> 3. EV guide tension reel back into initial position 4. IV Cycle SABB Latches. Perform {4.118 SAW XX RETRACT} (SODF: EPS: CORRECTIVE: PRIMARY POWER) steps 12 (13) for Unlatch OR steps 18 (19) for Latch 5. EV attempt outboard tension reel rotation 6. If smooth reel rotation, go to <u>INSTALL CABLE ON OUTBOARD REEL</u>, EV2, step 1 7. If jam or resistance encountered, repeat steps 4 and 5 8. If no joy, call MCC	

SABB SPOOL RE-TENSION – TASK DATA

Estimated Task Duration:

	With RMS	Without RMS
One EV Crew	N/A	N/A
Two EV Crew	N/A	01:00

Tools:

EV1	EV2
APFR	APFR
Ingress aid	Loop pin puller

EVA Fasteners:

Fastener Name	Label	Head Size	Qty	Install Torque (ft-lb)	Release Torque (ft-lb)	Failure Torque (ft-lb)	Turns	RPM
N/A								

EVA Connectors:

Harness	From	To	Clamps (#)	Conn Size	Function
N/A					

Foot Restraints:

Task	WIF	APFR Setting	BGA Angle
IEA Non-keel side – SABB Outboard Reel EV1 access	P4/S4-11, P6/S6-23	(12,HH,F,6)	283, 93
IEA Non-keel side – SABB Outboard Reel EV2 access	P4/S4-15, P6/S6-27	(10,HH,G,1)	283, 93
IEA Non-keel side – SABB Inboard Reel EV1 access	P4/S4-26, P6/S6-38	(1,FF,E,2)	285, 80
IEA Non-keel side – SABB Inboard Reel EV2 access	P4/S4-19, P6/S6-31	(5,GG,F,7)	285, 80
IEA Keel side – SABB Outboard Reel EV1 access	P4/S4-09, P6/S6-21	(12,HH,F,6)	283, 93
IEA Keel side – SABB Outboard Reel EV2 access	P4/S4-13, P6/S6-25	(10,HH,G,1)	283, 93
IEA Keel side – SABB Inboard Reel EV1 access	P4/S4-25, P6/S6-37	(1,FF,E,2)	285, 80
IEA Keel side – SABB Inboard Reel EV2 access	P4/S4-17, P6/S6-29	(5,GG,F,7)	285, 80

Notes:

1. SABB Outboard Reel does not have a pulley shroud
2. Combination wrenches may be used if the tension reel fails to take up the tension cable slack

Cautions:

1. Equipment damage – Beware of close proximity to blanket box during ingress. Visually inspect cables prior to handling for fraying or jamming on structure or nearby cables
2. Do not allow uncontrolled cw rotation of tension reel
3. Do not manually wrap cable on reel housing

Warnings:

1. Sharp edges:
   Pulley shroud at machined edges
   Guide wire mechanism cover at machined edges
   Guide wire mechanism
   Guide wire pulley
   Guide wire
   Top flange of blanket box
   Protrusions (4) on tension reel housing
2. Moving equipment hazard. Stay clear of SABB and capture latch mechanisms
3. Moving equipment hazard. Avoid contact with mast canister/beta gimbal during rotation of SAW

SABB SPOOL RE-TENSION – TASK DATA (Cont)

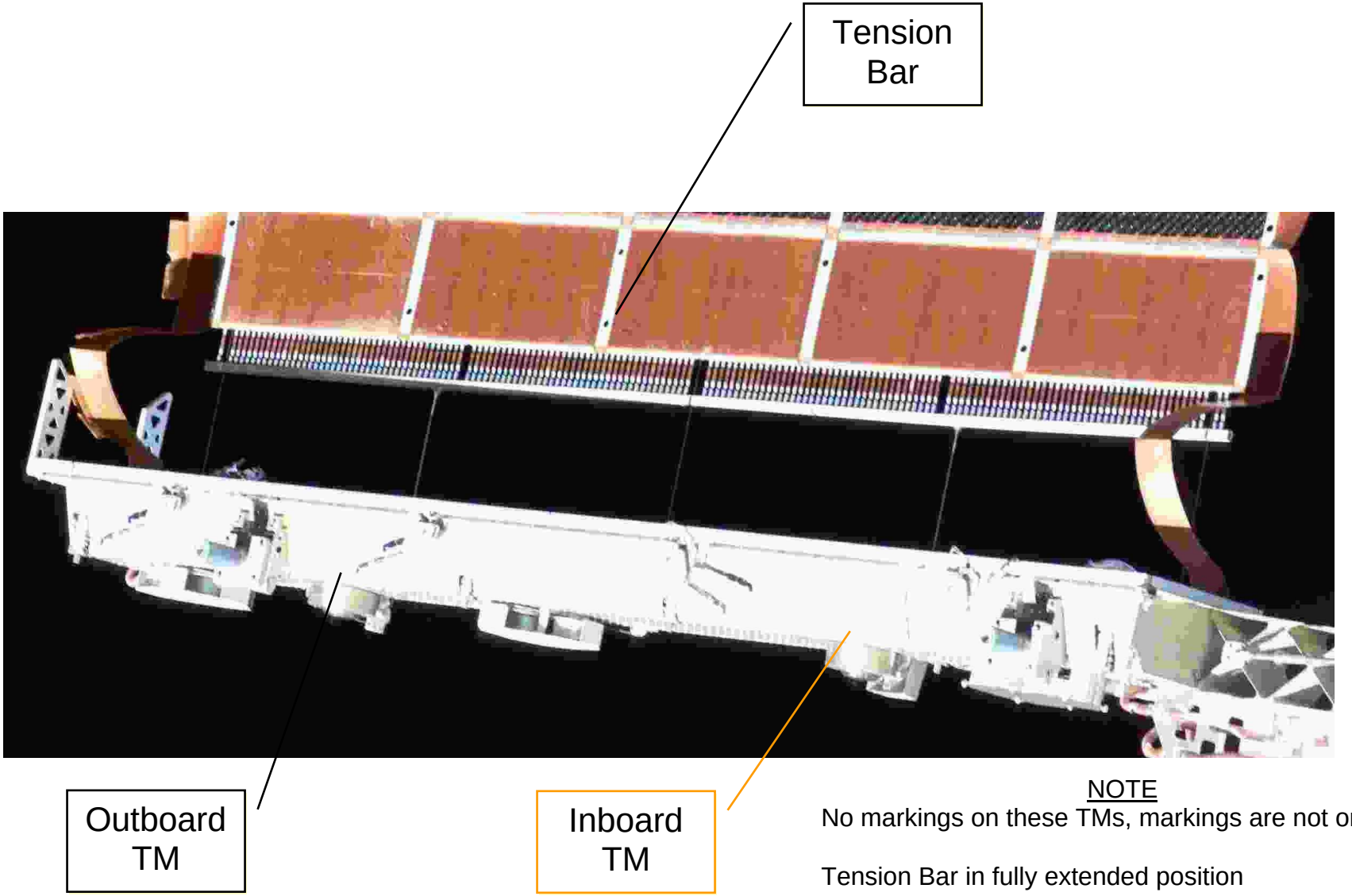

NOTE

No markings on these TMs, markings are not on S6.

Tension Bar in fully extended position

SABB SPOOL RE-TENSION – TASK DATA (Cont)

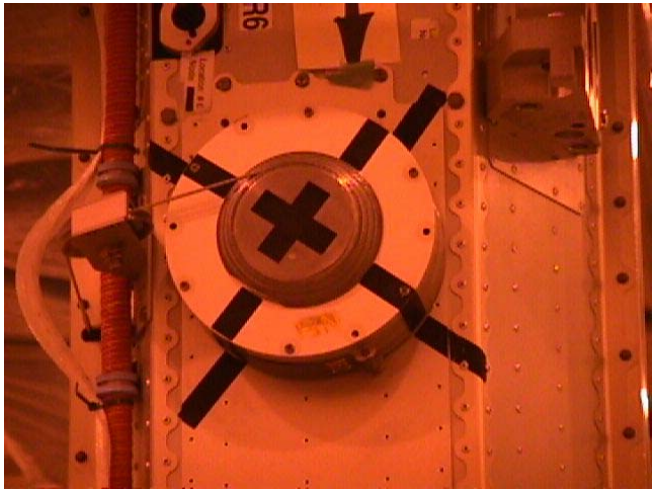

SABB Tensioning Reel Outboard – markings not on S6

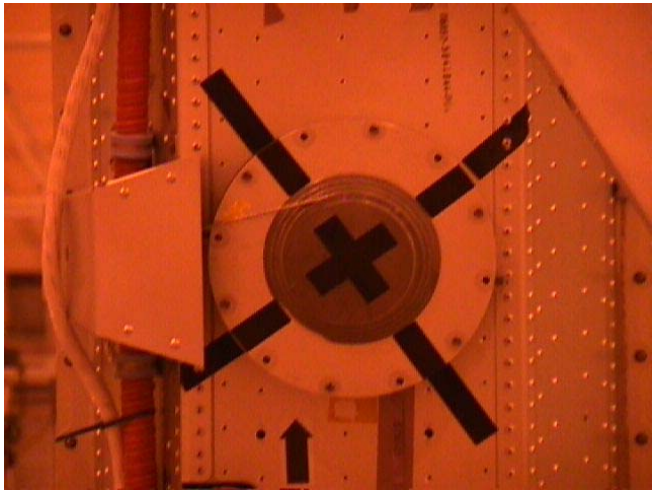

SABB Tensioning Reel Inboard – markings not on S6

MANUAL SAW JETTISON

PRIOR TO EVA:

1. Unstow SSU cover and place in crewlock
2. If ECU removal is planned, stow Medium ORU bag in crewlock
3. Remove SSU shunt plug adapter J5A and J6A caps and tether to tether point on SSU shunt plug adapter
4. Remove SSU shunt plug caps and mate SSU shunt plugs to SSU shunt plug adapter J5A and J6A (shunt plugs can go on either adapter receptacle)
5. Remove caps from SSU shunt plug adapter ground service equipment connectors
6. Stow SSU shunt plug adapter/shunt plugs, Cannon connector tool in EVA crewlock bag
7. If available, stow size 37 Cannon connector plug cap in EVA crewlock bag; if not available, will need to retrieve one from Z1

IV/RMS	EV1	EV2
Identify Affected Power Channel XX = _____ and opposite deck Power Channel YY = _____ **MCC-H** 1. Mnvr/orient ISS for SAW jettison **MCC-H** 2. Position and safe SAW for SSU Removal Perform {2.101 PVM BGA XX ENGAGE ANTIROTATION LATCH} (SODF: EPS: NOMINAL: PRIMARY POWER) **MCC-H** 3. Verify solar array positioned for EV crew access to SSU and BGA latched PCS PVM: EPS: BGA XX BGA XX 'ECU XX' Verify: Integ Cnt – Incrementing 'BGA XX' Verify: Actual Angle, deg = 270 Motor State – OFF Latch 1(2) Pin Status – Latched 4. GO for EV ingress at SSU worksite **MCC-H** 5. Verify power connector inhibits in place before SSU Removal PCS PVM: EPS: DCSU XX DCSU XX 'DCSU XX' sel RBI 1 Verify: Cmded Position – Op	WARNING Voltage hazard exists at the connectors of the SSU. SSU must be safed before removal Electrical Shock Hazard. SSU Shunt Plug installation/removal and SSU removal/installation must occur during eclipse. **STEPS DENOTED BY AN "E" MUST OCCUR DURING ECLIPSE**. Crew must wait the specified wait periods for voltage drops to safe levels before proceeding. EV crew will need to move away from exposed electrical receptacles during day pass Protrusion Hazard. SSU alignment post protrudes beyond mast canister. Maintain clearances between structure and crewmember during SSU removal Collision Hazard. The solar array motion should be prevented by locking the BGA. This avoids a collision hazard with the EV crew if the EV crew is within 24 inches of the array rotational envelope EVA SETUP 1. If required, retrieve Sq TM with 7/16 Rec socket and square scoop from Z1 toolbox 2. If required, translate to Z1 forward face, demate Cannon connector cap from Z1 J259 or J260, stow in EVA crewlock bag 3. On MCC GO, translate to SSU worksite 4. Transfer tools and APFR with AIA to worksite 5. Set up APFR (see Task Data page)	WARNING Voltage hazard exists at the connectors of the SSU. SSU must be safed before removal Electrical Shock Hazard. SSU Shunt Plug installation/removal and SSU removal/installation must occur during eclipse. **STEPS DENOTED BY AN "E" MUST OCCUR DURING ECLIPSE**. Crew must wait the specified wait periods for voltage drops to safe levels before proceeding. EV crew will need to move away from exposed electrical receptacles during day pass Protrusion Hazard. SSU alignment post protrudes beyond mast canister. Maintain clearances between structure and crewmember during SSU removal Collision Hazard. The solar array motion should be prevented by locking the BGA. This avoids a collision hazard with the EV crew if the EV crew is within 24 inches of the array rotational envelope EVA SETUP 1. Translate to Mast Canister/Aux bag (PMA1 stbd by Node bag) 2. Retrieve MCHD 3. On MCC GO, translate to worksite 4. Temp stow MCHD and SSU cover 5. Translate to BMRRM 6. Remove BMRRM thermal shroud (peels back)

MANUAL SAW JETTISON (Cont)

IV/RMS	EV1	EV2
Close Cmd – Inh Voltage: -4.2 – 4.2 Current: -7.5 – 7.5 PCS PVM: EPS: SSU XX SSU XX 'BCDU YY1' (YY= opposite channel on IEA) sel CP RBI BCDU XX CP RBIs 'YY1 CP RBI' (YY= opposite channel on IEA) Verify: YY1 CP RBI Posn – Op **MCC-H** 6. Turn off and off point video camera luminaries, rpcm open and closed inhibited **MCC-H** 7. Give GO for BMRRM J1 demate and SSU shunt plug installation	 **SSU shunt plugs and adapter installed on mast canister with shroud open**	**E7.** On MCC GO, demate connector from BMRRM J1 **E8.** Mate Cannon connector cap on BMRRM J1 9. If reqd, reinstall BMRRM thermal shroud
MCC-H 8. Give GO for SSU removal during 2nd ECLIPSE ONLY	**E6.** On MCC GO (2 min wait after transition from insolation to eclipse), remove mast canister ground test port caps (2) and place in EVA trash bag **E7.** Position MLI shroud as shown above or folded against shunt plugs **E8.** Install SSU shunt plug adapter with bails facing outward, not against mast canister 9. Reinstall MLI shroud 10. Ingress APFR **REMOVE FAILED SSU** 1. Install Sq TM onto primary fastener, √anti-backlash neutral **E2.** On MCC GO (5 min wait after transition from insolation to eclipse), Release **SSU fastener 1 turn** **PGT, Sq TM-7/16 Rec; B1** (12.0 ft-lb), **CCW2** (30 RPM), MTL **30.5**; 1 turn on bolt = 5 turns from PGT **E3.** Remove Sq TM **E4.** Install Sq Scoop on SSU **E5.** Release **SSU fastener** **PGT, 7/16-6-in ext; B1** (12.0 ft-lb), **CCW2** (30 RPM), MTL **30.5**; 10 turns	**REMOVE FAILED SSU**

MANUAL SAW JETTISON (Cont)

IV/RMS	EV1	EV2
9. Position and safe SAW for ECU Removal (if required) and SAW jettison. Perform {2.101 PVM BGA XX ENGAGE ANTI-ROTATION LATCH} (SODF: EPS: NOMINAL: PRIMARY POWER) using the following values: BGA XX Cmded Angle = 180 deg BGA XX Latch Select = 1 10. GO for EV ingress at ECU worksite **MCC-H** 11. Remove ECU power PCS PVM: EPS: BGA XX BGA XX sel RPCM YY A RPC 02 RPCM YY A RPC 02 **cmd** RPC Position – Open (Verify – Op) (Expect Caution Message: BGA XX Loss of Comm) **MCC-H** 12. GO for ECU removal and BMRRM cable demate	**E6.** √Status indicator – UNLOCK **E7.** Remove SSU and hand to EV2 2. Clear BGA rotation plane for BGA rotation and inform IV when clear WARNING Moving equipment hazard: Avoid contact with mast canister/beta gimbal during rotation of SAW REMOVE ECU (if reqd) 1. Set up and ingress APFR [see Task Data page] 2. On MCC GO, release **ECU fastener 1 turn** **PGT, Sq TM-7/16 Rec; B1** (12.0 ft-lb), **CCW2** (30 RPM), MTL **30.5**; 1 turn on bolt = 5 turns from PGT 3. Remove Sq TM 4. Install Square Scoop on ECU 5. Release **ECU fastener** **PGT, 7/16-6-in ext; B1** (12.0 ft-lb), **CCW2** (30 RPM), MTL **30.5**; 10 ± 2 turns 6. √Status indicator – UNLOCK 7. Remove ECU and stow in ORU transfer bag	1. Receive SSU and stow on SSU cover 2. Clear BGA rotation plane for BGA rotation and inform IV when clear RELEASE BMRRM FASTENERS/CONNECTORS 1. If not done already, remove BMRRM thermal shroud and temp stow 2. Release **BMRRM center fastener** **PGT**, 7/16-6-in ext; **B6** (24.0 ft-lb), **CCW2** (30 RPM), MTL **10.5**; 17 turns 3. On MCC GO, disconnect the following connectors from the BMRRM: Demate connector from J3 Demate connector from J2

MANUAL SAW JETTISON (Cont)

IV/RMS	EV1	EV2
MCC-H 13. Give GO for MCHD installation	INSTALL MCHD 1. On MCC GO, set up and ingress APFR (see Task Data page) 2. Deploy MCHD appendages 3. Install MCHD on mast canister 4. Fasten **MCHD corner attach fasteners** (4) **PGT**, 7/16-6-in ext; **A5** (7.0 ft-lb), **CW2** (30 RPM), MTL **30.5**; to HS	
MCC-H 14. Give GO for jettison	MANUAL SAW JETTISON 1. Using MCHD, move mast canister from beta gimbal at a velocity less than 1 ft/min. Move mast canister 2 ft from beta gimbal separation plane. Correct wing attitude as reqd to achieve stability 2. Release MCHD 3. Monitor SAW separation 4. When SAW is clear, egress worksite	MANUAL SAW JETTISON 1. On MCC GO, release **platform vice clamp fastener** **PGT**, 7/16-6-in ext; **B1** (12.0 ft-lb), **CCW2** (30 RPM), MTL **10.5**; 19 turns to HS 2. When complete, give EV1 GO for SAW motion 3. Call out separation distance until 2-ft separation achieved 4. Monitor SAW separation

MANUAL SAW JETTISON – TASK DATA

Estimated Task Duration:

	Without RMS
One EV Crew	N/A
Two EV Crew	03:00

Tools:

EV1	EV2
PGT	PGT
7/16-6-in ext	7/16-6-in ext
APFR/ingress aid	
Square TM with 7/16-in Recessed socket	
EVA crewlock bag	SSU cover
SSU shunt plug adapter	Mast Canister Handling Device
SSU shunt plugs (2)	
Size 33 Cannon conn plug cap	
Square scoop (2)	
Medium ORU bag (if reqd – for ECU)	

EVA Fasteners:

Fastener Name	Label	Head Size	Qty	Install Torque (ft-lb)	Max Break Away Torque (ft-lb)	Failure Torque (ft-lb)	Turns	RPM
SSU fastener	N/A	7/16-in	1	6.3	35.7	264 (R)	11 ± 2	30
ECU fastener	N/A	7/16-in	1	6.3	30.5	290.3 (R)	11 ± 2	30
BMRRM Center Fastener	N/A	7/16-in	1	N/A	16.0	54.0	17	30
MCHD Fasteners	N/A	7/16-in	4	7.0	8.1	11.0 (I)	ZIP	10
Vice Clamp	N/A	7/16-in	1	N/A	5.2	20.1	19	30

EVA Connectors:

Harness	From	To	Clamps (#)	Conn Size	Function
W05 P23 J3		BMRRM J3		25	ECU feed; SSU Control pwr; 1553B
W06 P22 J2		BMRRM J2		25	ECU cross feed
		BMRRM J1		37	Primary power

Foot Restraints:

Task	WIF	APFR Setting	BGA Angle
Access to SSU (IEA non-keel side 4A/3A SAW)	P4/S4-23	4, PP, G, 9	270
Access to SSU (IEA keel side 2A/1A SAW)	P4/S4-24	4, PP, G, 9	270
Access to BMRRM (IEA non-keel side 4A/ 3ASAW)	P4/S4-28	9, NN, G, 3	Any
Access to BMRRM (IEA keel side 2A/1A SAW)	P4/S4-27	9, NN, G, 3	Any
Install MCHD and 4A/3A SAW jettison position (IEA non-keel side SAW)	P4/S4-26	6, FF, F, 6	180
Install MCHD and 2A/1A SAW jettison position (IEA keel side SAW)	P4/S4-25	6, FF, F, 6	180
Access to 4A/3A ECU	P4/S4-26	8, OO, A, 3	180
Access to 2A/1A ECU	P4/S4-25	8, OO, A, 3	180
Access to SSU (IEA non-keel side)	S6/S6-35	4, PP, G, 9	270
Access to SSU (IEA keel side)	S6/S6-33	4, PP, G, 9	270
Access to BMRRM (IEA non-keel side)	S6/S6-39	9, NN, G, 3	Any
Access to BMRRM (IEA keel side)	S6/S6-40	9, NN, G, 3	Any
Install MCHD and SAW jettison position (IEA non-keel side)	S6/S6-38	12, FF, F, 12	180
Install MCHD and SAW jettison position (IEA keel side)	S6/S6-37	12, FF, F, 12	180
Access to ECU (IEA non-keel side)	S6/S6-38	8, OO, A, 3	180
Access to ECU (IEA keel side)	S6/S6-37	8, OO, A, 3	180

ORU Mass: SSU – 186 lb ECU – 90 lb SAW – approx 2326 lb

MANUAL SAW JETTISON – TASK DATA (Cont)

Notes:

1. The MCHD has four deployable legs. Each leg has an EVA fastener which engages a zip nut on the mast canister hand rails. The MCHD also has a deployable PGT cradle assembly which is used to drive the mast canister MDA. The PGT cradle assembly is not required for the jettison procedure

Cautions:

None

Warnings:

1. Electrical Shock Hazard: Install SSU shunt plug adapter/SSU shunt plugs and remove SSU during orbital eclipse. Procedure specifies wait time before installing SSU shunt plug adapter/SSU shunt plugs and removing SSU to allow voltages to drop to safe levels
2. Protrusion Hazard: SSU alignment post protrudes beyond mast canister. Maintain clearances between structure and crewmember during SSU changeout
3. Voltage hazard may exist at connectors of the ECU and BMRRM. ECU and BMRRM must be safed before removal
4. Collision Hazard: The solar array motion should be inhibited to prevent a collision hazard with the EV crew because the EV crew may be within 24 inches of the array rotational envelope
5. Moving equipment hazard: Avoid contact with mast canister/beta gimbal during rotation of SAW
6. Mass handling – The crewmember will control the SAW mass with bent arms to avoid loading the EMU suit structure
7. Release mast canister with minimal tip-off rates

Mast Canister Handling Device (MCHD)

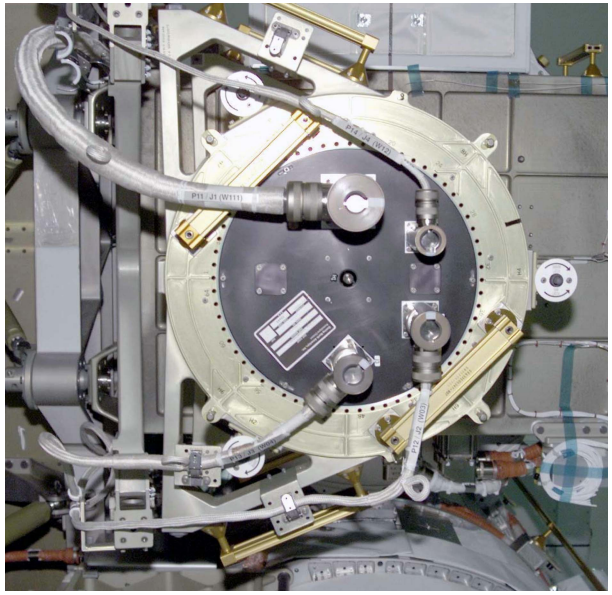

BMRRM connectors without BMRRM thermal cover

GAP CHECK TOOL TIE-DOWN

RTAS Gap Check Tool Contingency Tie Down. Tie-down taken from 12A.1 RTAS Gap Check Tool tether point to nearest handrail on S5. Can use wire tie from tether loop on gap check tool to handrail stanchion point nearest gap check tool

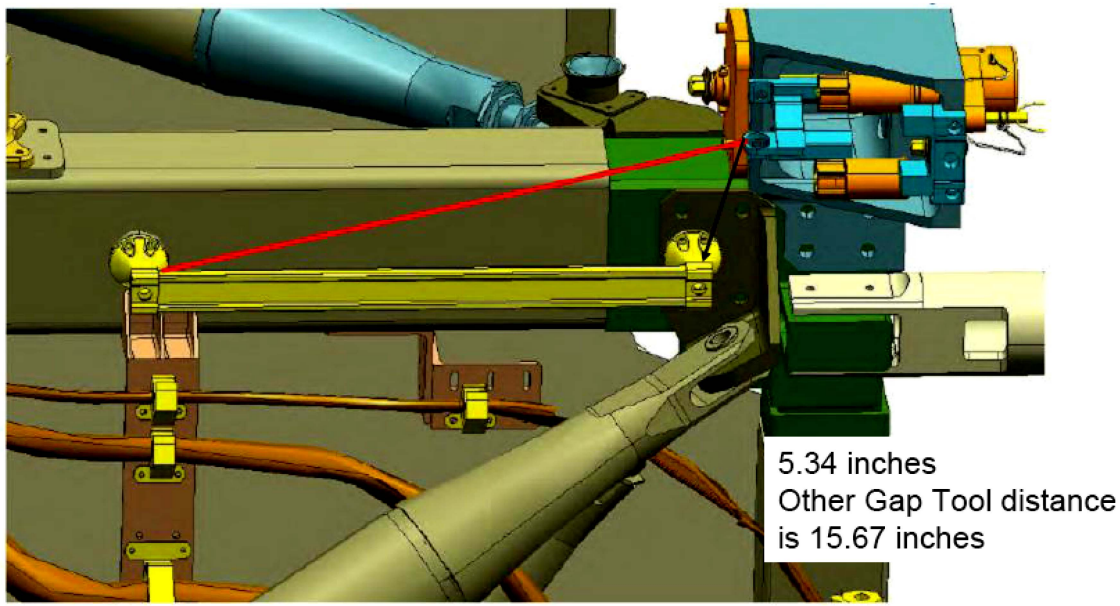

NOTE: Wire Tie process in approval, use Adj tether unless contacted by MCC-H with go on wire tie

SABB LAUNCH RESTRAINT TIE-DOWN

SABB Launch Restraint

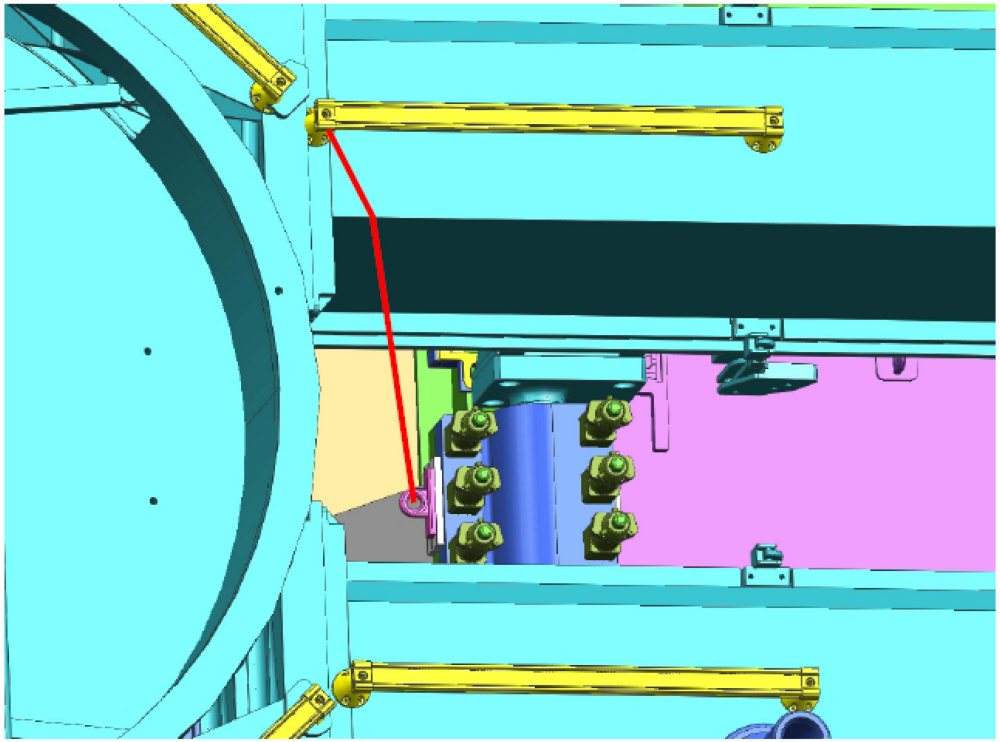

This tether is a long duration tether. Total length is approx. 28.4". It goes from the tether loop on the SABB Launch restraint to SABB HR. The buckles are not a concern

NOTE: Approval process for 2 Adj tethers daisy chained instead of LDTDT is in work

UCCAS/PAS TIE-DOWN

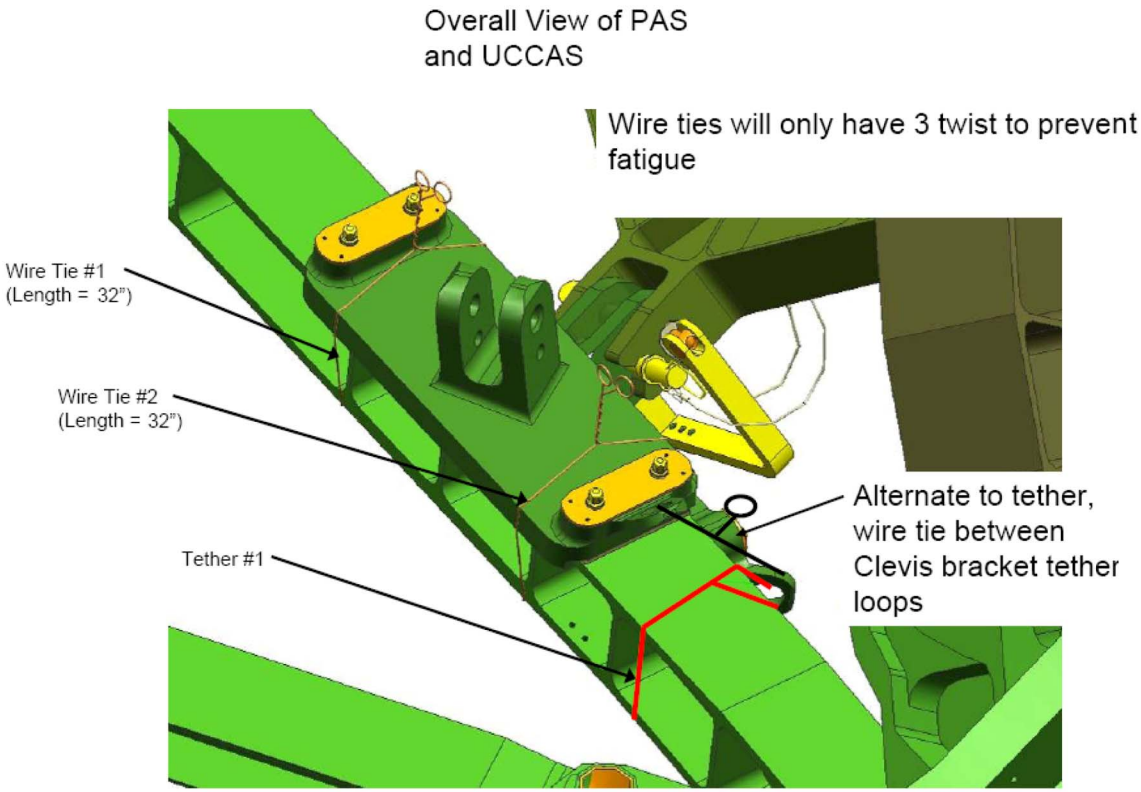

NOTE

Wire Tie in approval process, use Adj tether unless contacted by **MCC-H** with GO on wire tie

UCCAS/PAS TIE-DOWN (Cont)

PAS and UCCAS Tether #1

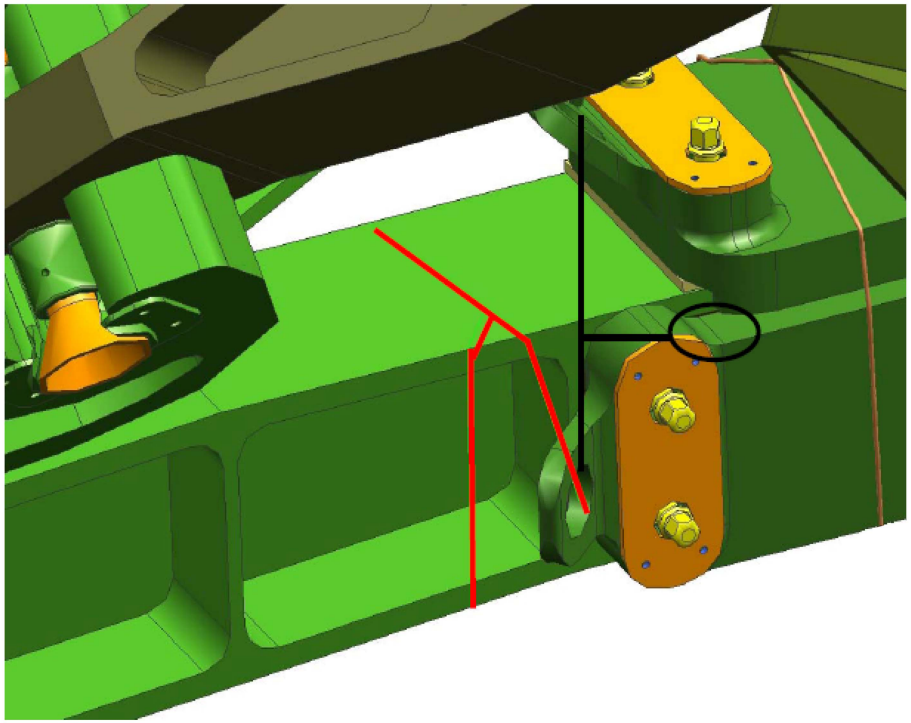

Alternative, use wire tie between clevis bracket tether loops

This tether is an adjustable equipment tether (small/small hooks). Total length is approx. 22.5". It goes from the tether loop on the Deployed Bracket around P3 or S3 Structure and hooks back onto its own D-Ring

NOTE

Wire Tie in approval process, use Adj tether unless contacted by **MCC-H** with GO on wire tie

RPCM TIE-DOWN

RPCM S04B-C Contingency Tie-Down, taken from Inc 12 US EVA 4 Hazard Report. Different RPCM, but tie-down still applicable

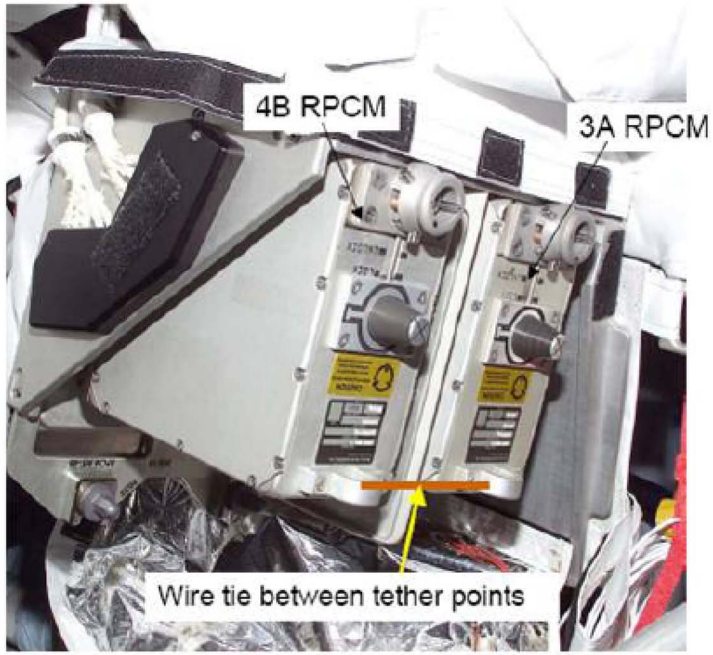

NOTE
Wire Tie in approval process, use Adj tether unless contacted by **MCC-H** with GO on wire tie

ETVCG Tie-Down

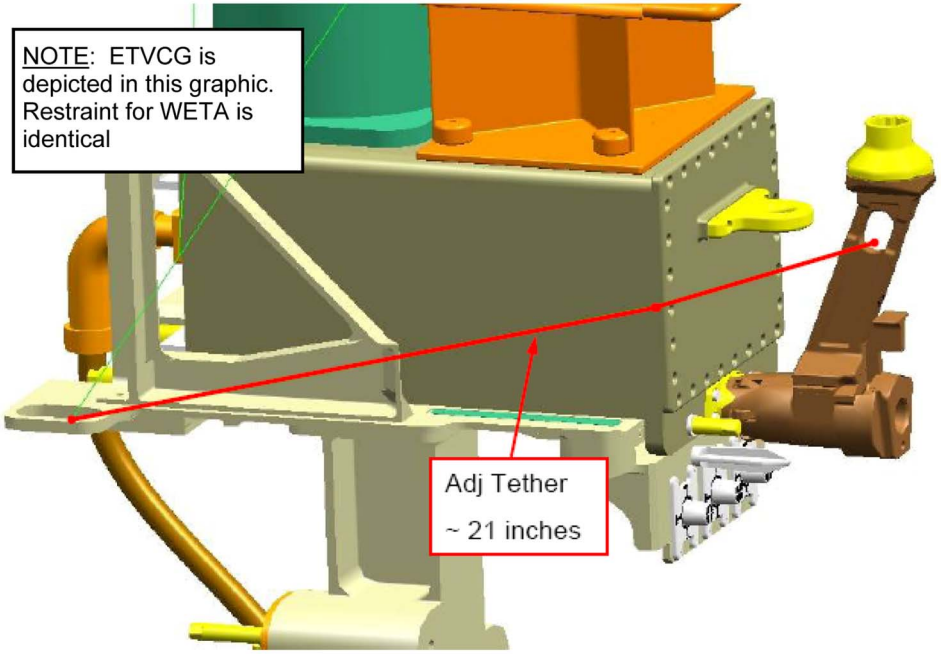

Dummy Box secured to VSSA

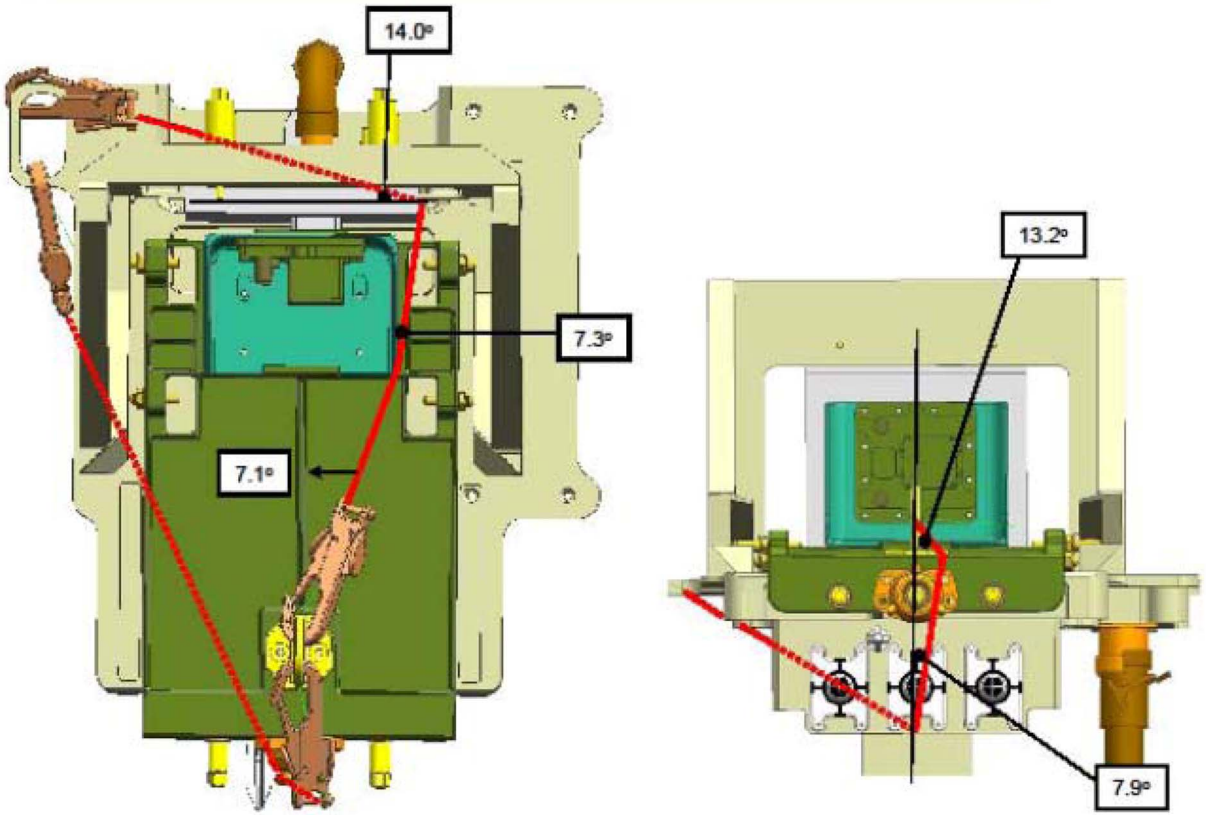

Dummy Box secured to VSSA

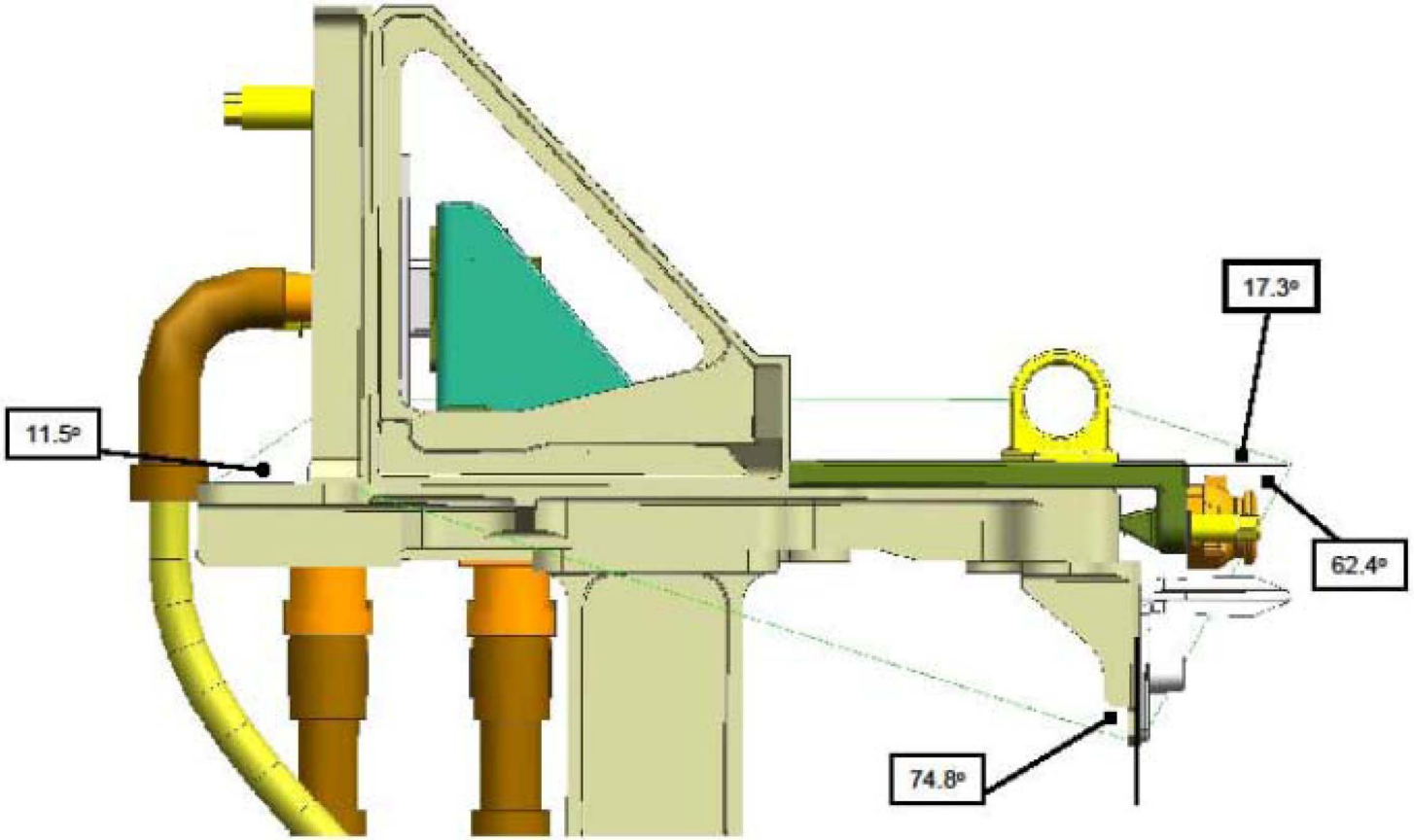

Dummy Box secured to VSSA

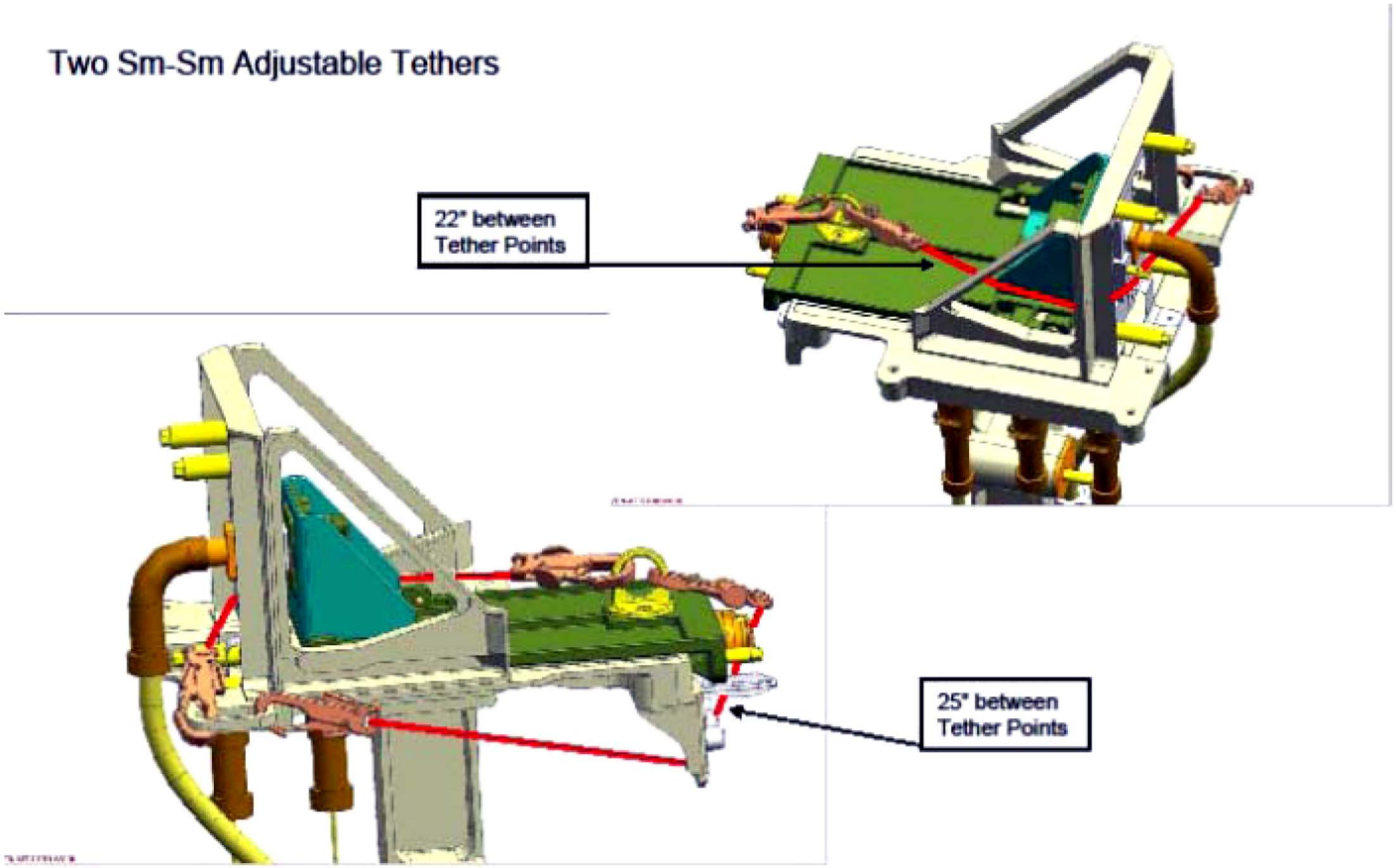

BMRRM REMOVE/REPLACE

IV/RMS	EV1	EV2
NOTE: S6 could be S4, P4, or P6 depending on failure	REMOVE OLD BMRRM 1. **PGT[A5 7.0 ft-lb, CCW2 30RPM, MTL 10.5]-6ext 7/16:** Unfasten BMRRM housing bolts (H6, H7, H8, H9) 8 +/- 1 turns, verify bolts spring up 2. **PGT[A5 7.0 ft-lb, CCW2 30RPM, MTL 10.5]-6ext 7/16:** Drive dual latch bolts (H3, H2, H4) 15 turns 3. **PGT[A1 2.5 ft-lb, CCW2 30RPM, MTL 5.5]-6ext 7/16:** Drive dual latch bolts (H4, H2, H3) to hard stop, 8 turns expected (23 ± 2 turns total expected) 4. Release remaining T/A clamps 5. On IV GO, demate connectors from BMRRM J4, J2 receptacles	REMOVE OLD BMRRM 1. Verify dual latches engaged to mast canister platform 2. On IV GO, demate W19 P1 from JBOX 6 J2 3. Mate 1553B terminator cap 10955J to JBOX 6 J2 4. Notify IV when complete
IV: 1. Safe Channel B for EV2 terminator install and EV1 J2 and J4 demate Verify ISS perform S6 PREPARATION FOR XX BMRRM R&R steps 11 & 12 complete GO for EV1 step 5 and EV2 steps 2-3 IV: 2. When EV2 steps 2-3 complete ISS perform S6 PREPARATION FOR XX BMRRM R&R steps 13 & 14 IV: 3. Prior to eclipse, safe Primary Power for EV1 J1 demate ISS perform S6 PREPARATION FOR XX BMRRM R&R steps 15 & 16 GO for EV1 step 6	6. On IV GO, demate J1 receptacle 7. Secure demated connectors clear of BMRRM removal area 8. Notify IV when complete	
IV: 4. If IV step 2 not successful, EV2 steps E5 and E6 required	WARNING Steps denoted by an "E" must occur during eclipse to prevent possible hot connector mate Old BMRRM has sharp edge hazard	WARNING Steps denoted by an "E" must occur during eclipse to prevent possible hot connector mate Old BMRRM has sharp edge hazard
IV: 5. Safe Channel A for EV1 J3 demate ISS perform S6 PREPARATION FOR XX BMRRM R&R steps 17 & 18 GO for EV1 step E9	**E9.** On IV GO, demate connector from the BMRRM J3 receptacles **E10.** Secure demated connectors clear of BMRRM removal area **E11. PGT[B1 12.0 ft-lb, CCW2 30RPM, MTL 10.5]-6ext 7/16:** Release BMRRM center bolt H1, 10 turns **E12.** Remove old BMRRM from Beta Gimbal housing assembly **E13.** Transfer old BMRRM to EV2	**E5.** If reqd: On IV GO, demate W05 P1 from JBOX 4 J2 **E6.** If reqd: Mate 1553B terminator cap 10956J to JBOX 4 J2 **E7.** If reqd: Notify IV when E5 and E6 complete **E8.** Translate to vice clamp worksite **E9. PGT[A4 6.3 ft-lb, CCW2 30RPM, MTL 10.5]-6ext 7/16:** Unfasten vice clamp bolt, 19 ± 2 turns **E10.** Receive old BMRRM from EV1 and stow on MUT EE/Ballstack/MUT EE

BMRRM REMOVE/REPLACE (Cont)

IV/RMS	EV1	EV2
	INSTALL NEW BMRRM **E14. PGT[B1 12.0 ft-lb, CCW2 30RPM, MTL 10.5]-6ext 7/16:** Release new BMRRM center bolt H1, 10 turns, verify center bolt springs up **E15.** Remove new BMRRM from housing **E16.** Position new BMRRM for EV2 verification of lever latch position **E17.** Use alignment mark to clock BMRRM; Install new BMRRM in Beta Gimbal housing assembly **E18.** Push center bolt H1 to soft capture BMRRM to platform **E19. PGT[A6 8.3 ft-lb, CW2 30RPM, MTL 10.5]-6ext 7/16:** Fasten center bolt H1 to hard stop, notify EV2 center bolt hard stop, turns will vary due to zip nut feature **E20.** Mate J3 connector to the new BMRRM, notify IV when complete	**INSTALL NEW BMRRM** **E11.** Verify lever latch in latched position on new BMRRM **E12.** Assist EV1 with alignment of new BMRRM into Beta Gimbal housing assembly **E13.** If reqd, On IV GO, Demate terminator cap 10956J from JBOX 4 J2 **E14.** If reqd, Mate W05 P1 to JBOX 4 J2, notify IV when complete 15. **PGT[A3 5.0 ft-lb, CW2 30RPM, MTL 5.5]-6ext 7/16:** Fasten vice clamp bolt, 19 ± 2 turns, verify locking collar engages, install vice clamp contingency tool with wire tie if reqd
IV: 6. Notify ISS EV1 step E20 complete GO for ISS perform EPS RETURN TO NOMINAL CONFIG POST XX BMRRM R&R steps 1-4 IV: 7. If Eclipse time permits, GO for EV1 step 21 Else, verify ISS perform EPS RETURN TO NOMINAL CONFIG POST XX BMRRM R&R steps 1-4 complete GO for EV1 step 21 IV: 8. Verify ISS perform EPS RETURN TO NOMINAL CONFIG POST XX BMRRM R&R step 1 complete GO for EV2 steps 16 & 17 IV: 9. Notify **MCC-H** EV1 step 21 and EV2 step 17 complete	21. On IV GO, mate connectors to the new BMRRM J1, J2 and J4 receptacles, notify IV when complete 22. **PGT[A4 6.3 ft-lb, CW2 30RPM, MTL 5.5]-6ext 7/16:** Start each bolt before driving to hard stop, fasten BMRRM housing bolts (H7, H9, H6, H8) 8 ± 1 turns 23. **PGT[A6 8.3 ft-lb, CW2 30RPM, MTL 10.5]-6ext 7/16:** Drive dual latch bolts (H3, H2, H4) to hard stop, 23 ± 2 turns expected 24. Receive old BMRRM from EV2 25. Position old BMRRM for EV2 verification of lever latch position 26. Using alignment pin to clock BMRRM, stow old BMRRM in housing 27. Push in center bolt H1 to set soft capture 28. Inspect old BMRRM for contaminants 29. **PGT[A6 8.3 ft-lb, CW2 30RPM, MTL 10.5]-6ext 7/16:** Fasten center bolt H1 to hard stop on old BMRRM, turns will vary due to zip nut feature 30. Install connector cover on old BMRRM 31. Stow old BMRRM RET on old BMRRM	16. Verify dual latch blocks are still flush on platform 17. On IV GO, Demate terminator cap 10955J from JBOX 6 J2 18. Mate W19 P1 to JBOX 6 J2, notify IV when complete 19. Stow terminator connector 20. Verify dual latches released from mast canister platform 21. Retrieve old BMRRM by releasing MUT from BGA HR 22. Transfer old BMRRM to EV1 23. Verify lever latch in latched position on old BMRRM

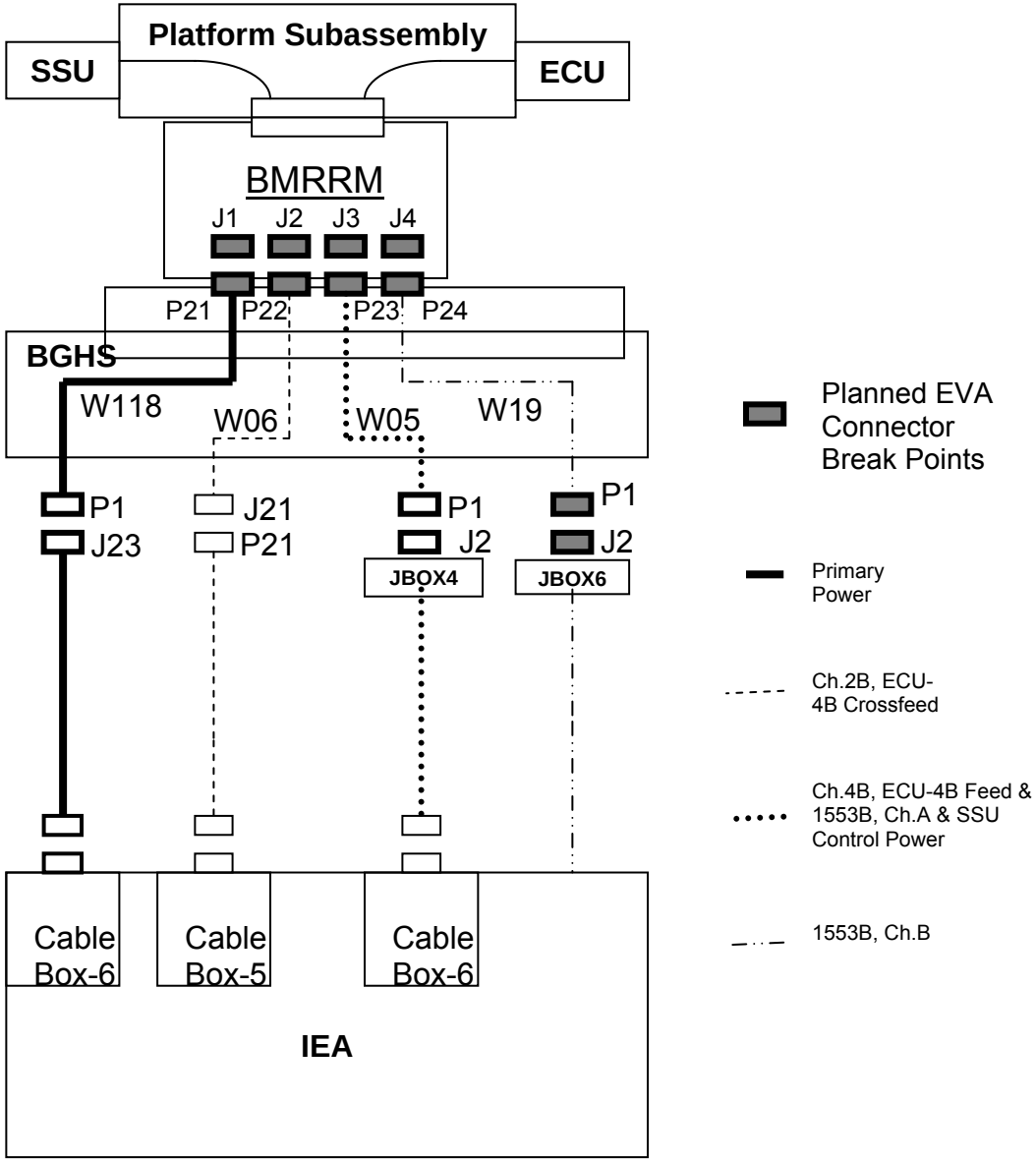
Platform Subassembly
SSU
ECU
BMRRM
J1
J2
J3
J4
P21
P22
P23
P24
BGHS
W118
W06
W05
W19
P1
J23
J21
P21
P1
J2
P1
J2
JBOX4
JBOX6
Cable Box-6
Cable Box-5
Cable Box-6
IEA
Planned EVA Connector Break Points
Primary Power
Ch.2B, ECU-4B Crossfeed
Ch.4B, ECU-4B Feed & 1553B, Ch.A & SSU Control Power
1553B, Ch.B

FS 16-91

BMRRM REMOVE/REPLACE – TASK DATA

Estimated Task Duration:

	With RMS	Without RMS
One EV Crew	N/A	N/A
Two EV Crew	N/A	03:00

Tools:

EV1 (RMS)	EV2 (FF)
PGT	Crewlock bag
7/16-6-in ext	Vice clamp locking tool
Cannon connector tool	Cannon Connector tool
Round scoop	J23 Connector Cap
Ball stack (2)	JBOX 6 J2 terminator cap
MUT end effector (3)	JBOX 4 J2 terminator cap
APFR	

EVA Fasteners:

Fastener Name	Label	Head Size	Qty	Install Torque (ft-lb)	Release Torque (ft-lb)	Failure Torque	Failure Torque	Turns	RPM
Dual Latches	H2, H3, H4	7/16-in	3	2.5 SAW Latch	8.3 BMRRM Latch	3.4 SAW Latch	47 BMRRM Latch	23 +/- 2	N/A
BMRRM Center Fastener	H1	7/16-in	1	8.3	10.5		51.6	10 +/- 2	N/A
BMRRM Housing Fasteners	H6, H7, H8, H9	7/16-in	4	5.5	7.0		15.5	8 +/- 1	N/A
Vice Clamp Fastener	None	7/16-in	1	2.5	5.0		8	19 +/- 2	N/A

EVA Connectors:

Harness	From	To	Clamps (#)	Conn Size	Function
W111 P11		XX BMRRM J1			Primary power
W03 P12		XX BMRRM J2			
W04 P13		XX BMRRM J3			
W12 P14		XX BMRRM J4			
W118 P21		YY BMRRM J1		37	Primary power
W118 P1		W18 J23		37	Primary power
W06 P22		YY BMRRM J2			ECU-XX cross feed
W05 P23		YY BMRRM J3		25	ECU-YY feed; SSU YY Control pwr; 1553B, Bus A
W05 P1		J2 (JBOX 4)		25	ECU-YY feed; SSU YY Control pwr; 1553B, Bus A
W19 P24		YY BMRRM J4		19	1553B, Bus B
W19 P1		J2 (JBOX 6)		19	1553B, Bus B

Foot Restraints:

Task	WIF	APFR Setting
Access to Stbd SAW BMRRM		
Access to Port SAW BMRRM		
BMRRM change-out support		
BMRRM change-out support		
Access to Stbd SAW SSU		
Access to Port SAW SSU		

ORU Mass: BMRRM = 142 lb Cover = 69 lb

BMRRM REMOVE/REPLACE – TASK DATA (Cont)

Notes:

1. Translation technique: The BMRRM within the ORU cover can be attached to the EVA crewmember via the BRT and Round Scoop. The EVA crewmember should attach an additional tether between themselves and the ORU cover to prevent uncontrolled motion
2. Fastener turn counts in the procedures are in reference to the bolt head
3. Recommend spare BMRRM temp stowage configuration: MUT end effector; ball stack, round scoop attached to cover microconical. A second tether should be tethered between the cover and structure
4. The three dual latches are used to latch the housing to the platform. Order of operation is not important
5. Three Dual Latches are equipped with locking collars. Collars must be pushed and held while rotating bolt heads
6. BMRRM center bolt is equipped with a spring and will pop out when fully unfastened
7. Vice Clamp Assembly actuating bolt is equipped with a locking collar. Collar must be pushed and held while rotating the bolt head
8. Four captive fasteners securing BMRRM to the housing are equipped with springs and will pop out when fully unfastened
9. Center bolt on the bottom of the platform assembly is a ZIP bolt. The number of turns to tighten to hard stop depends on how far the center bolt is pushed into the ZIP nut
10. BMRRM housing fasteners must be pushed lightly to start thread engagement
11. Vernier thrusters with CMG are allowed for attitude control during the BMRRM ORU changeout

Cautions:

1. FPP solar arrays, probes, and RF box are sensitive to impact loads. FPP (located in WIF S6-39) will interfere with BMRRM remove and replace procedure. FPP can be relocated to an alternate WIF. Grounding pin can be removed from grounding lug if necessary
2. Hardware Damage. The Vice clamp fastener may “back out” if the fastener locking collar does not engage after the spare BMRRM is installed. Vice clamp locking collar must be installed to prevent inadvertent rotation of Vice clamp bolt. Installation of Vice clamp collar locking tool will be required if vice clamp locking collar fails to engage
3. Minimize loads on Mast Platform when only Dual Latch Fasteners are engaged
4. Loss of ISS Hardware. Failure to engage the BMRRM Dual latches prior to failed BMRRM removal will result in SAW release

Warnings:

1. Excessive loads into the EMU: The EVA crewmember should translate at a rate no greater than 1.6 fps when the EVA crewmember is translating with the BMRRM attached to their BRT
2. Crew must remain 24 inches from rotating starboard SAW
3. Sharp Edge Hazard. The flange at the base of the failed BMRRM is sharp. Handle the BMRRM only by the EVA handle holds. Avoid contact with the end of the BMRRM opposite of the BMRRM face plate. The flange at the base of the replacement BMRRM is not sharp but should be avoided to avoid hardware damage
4. Umbilical mate/demate inhibits/constraints must be verified to avoid HOT connector mate/demate

DCSU REMOVE AND REPLACE

IV	EV1	EV2
MCC-H 1. Verify SAW rotation inhibits complete 2. Verify Inhibits for spare DCSU complete; give EV GO for DCSU removal	REMOVE SPARE DCSU FROM ESP-1 1. Translate to ESP-1 worksite 2. Ingress APFR 3. Remove thermal cover 4. Transfer thermal cover to EV2 CAUTION Acme screws unfastened/fastened out of sequence could lead to jamming of DCSU Minimize force applied to H1 microfixture 5. Install Sq TM onto H1, √anti-backlash neutral 6. **PGT[B1** 12.0 ft-lb, **CCW2** 30RPM, MTL **30.5]-Sq TM-7/16Rec:** Drive PGT 5 turns (1 turn at bolt) on H1 7. Remove Sq TM; Install on H2 fitting; √anti-backlash neutral 8. **PGT[B1** 12.0 ft-lb, **CCW2** 30RPM, MTL **30.5]-Sq TM-7/16Rec:** Drive PGT 5 turns (1 turn at bolt) on H2 9. Remove Sq TM 10. **PGT[B1** 12.0 ft-lb, **CCW2** 30RPM, MTL **30.5]-6 ext-7/16:** Drive H1 minimum 5 turns 11. √Status indicator – UNLOCK 12. Install Square scoop on H2 13. **PGT[B1** 12.0 ft-lb, **CCW2** 30RPM, MTL **30.5]-6 ext-7/16:** Drive H2 minimum 16 turns 14. √Status indicator – UNLOCK 15. Remove DCSU from ESP-1 FSE 16. Transfer spare DCSU to EV2	REMOVE SPARE DCSU FROM ESP-1 1. Translate to ESP-1 worksite 2. Set up WIF Extender and APFR (see Task Data sheet) 3. Receive thermal cover from EV1 4. Temp stow thermal cover at worksite 5. Receive spare DCSU from EV1 and stow on BRT CAUTION Avoid contacting DCSU mating surface (electrical connectors and cooling fins) with structure during translation with DCSU
IV 3. Record s/n of failed DCSU: _____ **MCC-H** 4. Verify electrical power inhibits complete; give EV GO for DCSU removal	REMOVE FAILED DCSU 1. Translate to IEA worksite 2. Set up and ingress APFR (see Task Data sheet) 3. Verify failed DCSU P/N and s/n to IV 4. Install Sq TM onto H1, √anti-backlash neutral 5. On MCC GO, **PGT[B1** 12.0 ft-lb, **CCW2** 30RPM, MTL **30.5]-Sq TM-7/16Rec:** Drive PGT 5 turns (1 turn at bolt) on H1	REMOVE FAILED DCSU 1. Translate to IEA worksite with spare DCSU

DCSU REMOVE AND REPLACE (Cont)

IV	EV1	EV2
	6. Remove Sq TM; Install on H2 fitting; √anti-backlash neutral 7. **PGT[[B1** 12.0 ft-lb, **CCW2** 30RPM, MTL **30.5]-Sq TM-7/16:** Drive PGT 5 turns (1 turn at bolt) on H2 8. Remove Sq TM 9. **PGT[B1** 12.0 ft-lb, **CCW2** 30RPM, MTL **30.5]-6 ext-7/16:** Drive H1 minimum 5 turns 10. √Status indicator – UNLOCK 11. Install Square scoop on H2 12. **PGT[B1** 12.0 ft-lb, **CCW2** 30RPM, MTL **30.5]-6 ext-7/16:** Drive H2 minimum 16 turns 13. √Status indicator – UNLOCK 14. Remove failed DCSU 15. Stow failed DCSU on BRT	
	INSTALL SPARE DCSU 1. Receive spare DCSU from EV2 2. Install spare DCSU on IEA CAUTION Ensure ORU is level during installation to prevent damage to H2 status indicator probe 3. √Status indicator on H1 and H2 are in UNLOCK 4. **PGT[A3** 4.8 ft-lb, **CW2** 30RPM, MTL **30.5]-6 ext-7/16:** Drive H2, 16-17 turns 5. √Status indicator – LOCK 6. **PGT[A3** 4.8 ft-lb, **CW2** 30RPM, MTL **30.5]-6 ext-7/16:** Drive H1, 5-6 turns 7. √Status indicator – LOCK 8. Remove Square scoop from H2 fitting 9. Egress and remove APFR 10. Give **MCC-H** GO to restore power to DCSU	INSTALL SPARE DCSU 1. Transfer spare DCSU to EV1
IV 5. Record spare DCSU bolt data **Bolt** **Turns** **Torque** H1 _____ _____ H2 _____ _____		
	STOW FAILED DCSU ON ESP-1 1. Translate to ESP1 worksite 2. Transfer failed DCSU to EV2 3. Retrieve and transfer thermal cover to EV2	STOW FAILED DCSU ON ESP-1 1. Translate to ESP-1 worksite 2. Ingress APFR/WIF Extender 3. Receive failed DCSU from EV1 and install on ESP-1 4. √Status indicator on H1 and H2 are in UNLOCK 5. **PGT[B3** 18.4 ft-lb, **CW2** 30RPM, MTL **30.5]-6 ext-7/16:** Drive H2, 16-17 turns 6. √Status indicator – LOCK 7. **PGT[B3** 18.4 ft-lb, **CW2** 30RPM, MTL **30.5]-6 ext-7/16:** Drive H1, 5-6 turns 8. √Status indicator – LOCK 9. Remove Square scoop from H2 fitting 10. Receive thermal cover from EV1 11. Install thermal cover over DCSU 12. Remove APFR and WIF Extender
IV 6. Record failed DCSU bolt data **Bolt** **Turns** **Torque** H1 _____ _____ H2 _____ _____		

DCSU REMOVE AND REPLACE – TASK DATA

Estimated Task Duration:

Two EV Crew	2:30

Tools:

EV1 (RMS)	EV2 (FF)
PGT	PGT
6ext 7/16	6ext 7/16
Square TM w/7/16 in Rec Socket	Square TM w/7/16 in Rec Socket
Square scoop	Square scoop
APFR	APFR
	WIF Extender
BRT	BRT

EVA Fasteners:

Fastener Name	Label	Head Size	Qty	Install Torque (ft-lb)	Release Torque (ft-lb)	Failure Torque (ft-lb)	Turns	RPM
Fastener	H1	7/16	1	4.8	31.7	190.3 (R) 22.8 (I)	5-6	30
Fastener	H2	7/16	1	4.8	33.5	188.4 (R) 27.8 (I)	16-17	30

EVA Connectors:

Harness	From	To	Clamps (#)	Conn Size	Function
P3/J3	ESP1	FRAM	3		FSE Heater Power

Foot Restraints:

Task	WIF	APFR Setting	WIF Extender
P6 (S6) Non-keel side DCSU	P6-26 (S6-26)	12, PP, D, 12	N/A
P6 (S6) Keel side DCSU	P6-28 (S6-28)	12, PP, D, 12	N/A
P4 (S4) IEA Non-keel side DCSU	P4-14 (S4-14)	12, PP, D, 12	N/A
P4 (S4) IEA Keel side DCSU	P4-16 (S4-16)	12, PP, D, 12	N/A
Access to ESP1 DCSU (spare)	LAB 01-06	11, QQ, G, 12	6, B, 7

ORU Identification:

Task	Part Number	Serial Number
Spare DCSU	R072610	X830114
Failed DCSU	TBD	TBD

ORU Mass: DCSU = 217 lb, FSE = 154 lb

Notes:

1. Thermal conditioning of the spare DCSU before installation may be required (Preliminary LSAR time of 18 min)
2. DCSU will travel outward or inward as Acme screw H2 is unfastened or fastened
3. Lock SARJ when translating outboard of SARJ
4. A crewman on the RMS could also be used for ORU transfer to and from the worksite. This might also change the order of the task
5. If taking the FRAM with the DCSU, combined mass exceeds BRT capability
6. DO NOT USE the P6 IEA ORU placards. The label information is incorrect
7. There is no hard stop when releasing H1 and H2 bolts; upon release, they will free spin

Cautions:

1. Acme screws unfastened/fastened out of sequence could lead to jamming of DCSU during removal/installation. When unfastening Acme screws, H1 must be unfastened before H2. When fastening Acme screws, H2 must be fastened before H1
2. Avoid contacting DCSU mating surface (electrical connectors and cooling fins) with structure during translation with DCSU
3. Ensure ORU is maintained level and perpendicular to stanchion during installation. Failure to comply may damage H2 status indicator probe
4. Minimize force applied to H1 microfixture. It is not rated to withstand excessive loads

Warnings:

1. Depending on worksite proximity to SAW rotation, **MCC-H** may need to inhibit SAW rotation to avoid collision with the EVA crewmembers
2. Hazard voltage exists at the mating connectors to the failed DCSU. DCSU interface must be safed before removal
3. If taking the FRAM with the DCSU, inhibit may be different. Connector must be released

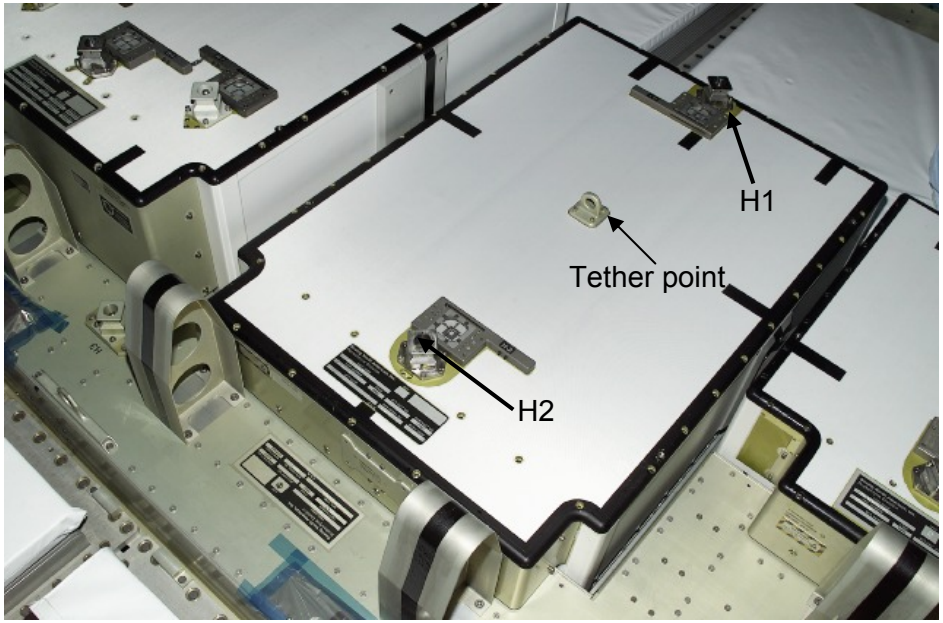

DCSU installed on P6 IEA

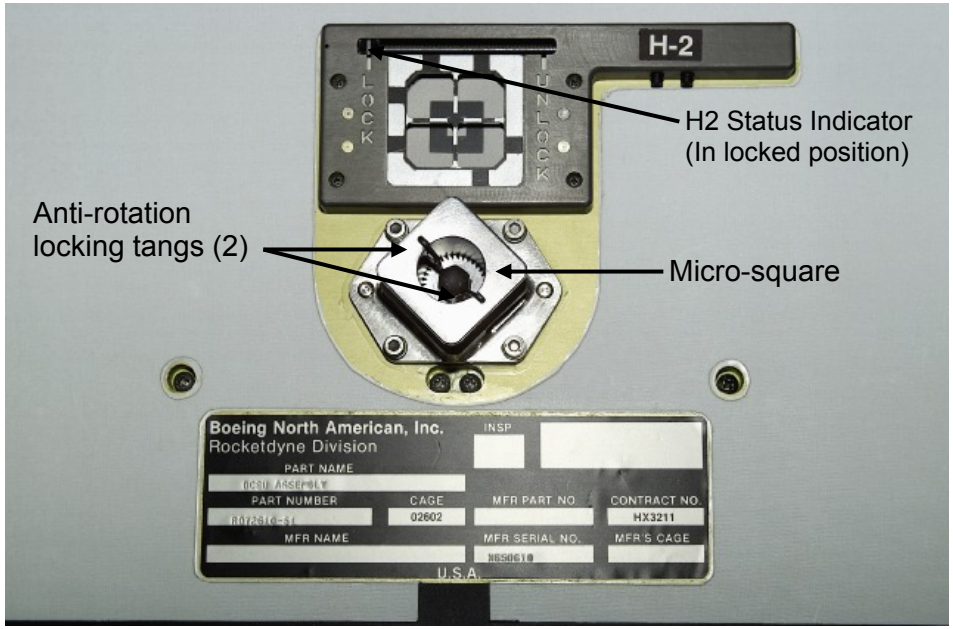

H2 Status Indicator in Locked position

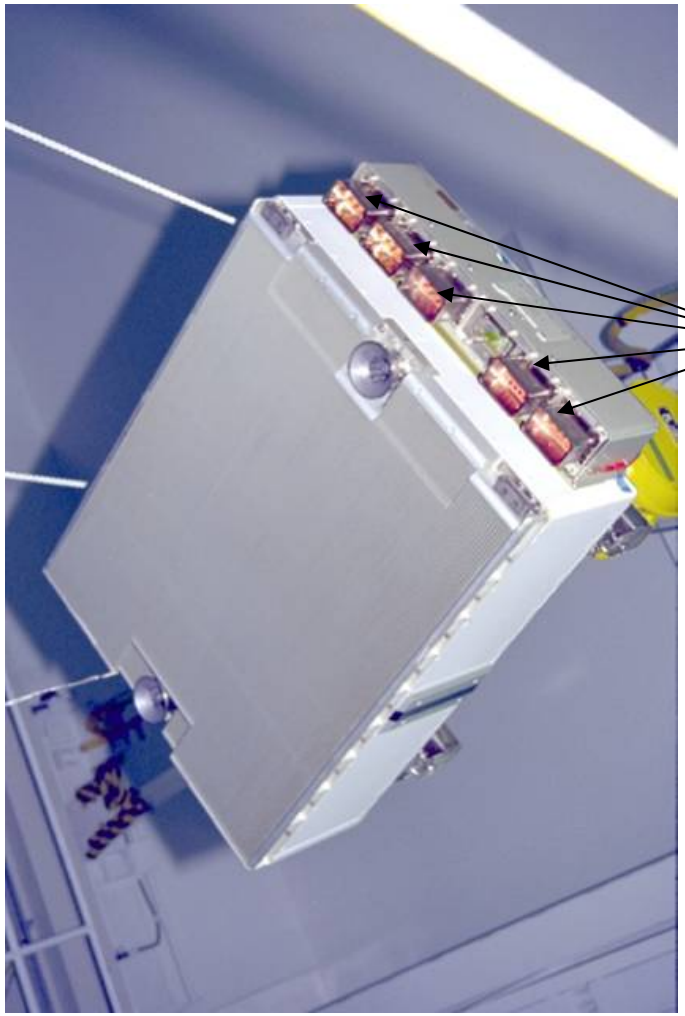

P6 IEA DCSU (prior to installation)

Electrical interfaces

Coldplate

P6 IEA DCSU lower deck location (prior to installation)

DDCU REMOVE AND REPLACE

Prior to EVA:

1. Verify part number of spare ORU (R076522-121) and record serial number on task data sheet. Report P/N and s/n of spare unit to **MCC-H**
2. Position DDCU-E in large ORU Transfer Bag and stow in airlock

IV/RMS	EV1	EV2
MCC-H 1. Verify electrical power inhibits complete. Give EV GO for DDCU removal 2. Verify P/N of failed ORU and record s/n on task data sheet. Report P/N and s/n to **MCC-H** NOTE ORU is successfully installed if H1 and H2 screw torque and appropriate number of turns has been met. Removing DDCU from cold plate causes H1 status indicator to move from UNLOCK to LOCK	REMOVE FAILED DDCU 1. Translate to P6 IEA worksite 2. Transfer tools and APFR to worksite 3. Setup and ingress APFR (see task data) 4. Report failed DDCU P/N and s/n to IV CAUTION Acme screws unfastened/fastened out of sequence could lead to jamming of DDCU during removal. When unfastening Acme screws, H1 must be unfastened before H2 5. Install SqTM onto H1 fitting, √anti-backlash neutral 6. **PGT[B1 12.0 ft-lb, CCW2 30RPM, MTL 30.5]-Sq TM-7/16Rec:** Drive PGT, 5 turns 7. Remove SqTM and install on H2 fitting 8. √Anti-backlash neutral 9. Install 7/16 X 6-in socket 10. **PGT[B7 25.5 ft-lb, CCW2 30RPM, MTL 30.5]-6 Ext 7/16:** Drive H1, 8 turns 11. √Status indicator – UNLOCK 12. **PGT[B1 12.0 ft-lb, CCW2 30RPM, MTL 30.5]-Sq TM-7/16Rec:** Drive PGT, 5 turns 13. Remove SqTm and stow 14. **PGT[B7 25.5 ft-lb, CCW2 30RPM, MTL 30.5]-6 Ext 7/16:** Drive H2, 18 turns 15. √Status indicator – UNLOCK WARNING Avoid contact with intermeshing fins of the DDCU-E and coldplate due to sharp edge concerns 16. Install Square scoop on H2 fitting 17. Remove failed DDCU (soft dock on H2 15-20 lb) 18. Hand off failed DDCU to EV2	REMOVE FAILED DDCU 1. Translate to P6 IEA worksite 2. Transfer tools and spare DDCU to worksite 3. Receive failed DDCU from EV1 4. Temp stow failed DDCU

DDCU REMOVE AND REPLACE (Cont)

IV/RMS	EV1	EV2
	INSTALL SPARE DDCU 1. Inspect guide rails, connectors and coldplate fins for debris/damage 2. Receive spare DDCU from EV2 3. Install spare DDCU (soft dock on H2 15-20 lb) 4. √Status indicator on H1 is in UNLOCK CAUTION There is a TBD thermal dwell time between the DDCU & coldplate. Wait TBD time prior to driving bolt 5. Remove Square Scoop from H2 fitting 6. **PGT[A3 4.8 ft-lb, CW2 30RPM, MTL 30.5]-6Ext-7/16:** Install primary bolt H2 to hard stop, approx 17 turns 7. √Visual indicator – LOCK 8. **PGT[A3 4.8 ft-lb, CW2 30RPM, MTL 30.5]-6Ext-7/16:** Install secondary bolt H1, approx 7 turns ± 2 9. √Visual indicator – LOCK 10. Give **MCC-H** GO to restore power to DDCU 11. Place failed DDCU in ORU Transfer Bag	INSTALL SPARE DDCU 1. Open ORU Transfer Bag, install Square Scoop on H2 2. Remove spare DDCU from ORU Transfer Bag 3. Inspect DDCU fins for debris/damage 4. Hand off spare DDCU to EV1 5. Place failed DDCU in ORU Transfer Bag

DDCU REMOVE AND REPLACE – TASK DATA

Estimated Task Duration:

Two EV Crew	1:00

Tools:

EV1	EV2
PGT	PGT w/7/16 X 6-in socket
7/16 X 6-in socket	EVA Crewlock bag
Square TM w/7/16 in Rec Socket	Large ORU Transfer Bag
Square Scoop	Square Scoop

EVA Fasteners:

Fastener Name	Label	Head Size	Qty	Install Torque (ft-lb)	Release Torque (ft-lb)	Failure Torque (ft-lb)	Turns	RPM
Fastener	H1	7/16	1	4.8	31.7	190.3 (R) 22.8 (I)	5-6	30
Fastener	H2	7/16	1	4.8	33.5	188.4 (R) 27.8 (I)	16-17	30

Foot Restraints:

Task	WIF	CETA Position	Swing Arm Settings	APFR Setting
DDCU-E 2B (P6 IEA Non-keel side)	P6-18	N/A	N/A	9, PP, E, 12*
DDCU-E 4B (P6 IEA Keel side)	P6-17	N/A	N/A	2, PP, F, 12*

ORU Identification:

ORU	Part number	Serial Number
Spare DDCU	R076522-121	X650374
Failed DDCU	R076522-121	

Notes:

N/A

Cautions:

1. Acme screws unfastened/fastened out of sequence could lead to jamming of DDCU during removal. When unfastening Acme screws, H1 must be unfastened before H2
2. Avoid contacting DDCU electrical connector mating surfaces
3. Square Scoop should only be installed on H2 fitting for ORU handling. The H1 fitting may not support EVA handling loads

Warnings:

1. Hazard voltage exists at the mating connectors to the DDCU. DDCU interface must be safed before removal
2. Depending on worksite proximity to SAW rotation, **MCC-H** may need to inhibit SAW rotation to avoid collision with the EVA crewmembers
3. Avoid contact with intermeshing fins of the DDCU-E and coldplate due to sharp edge concerns

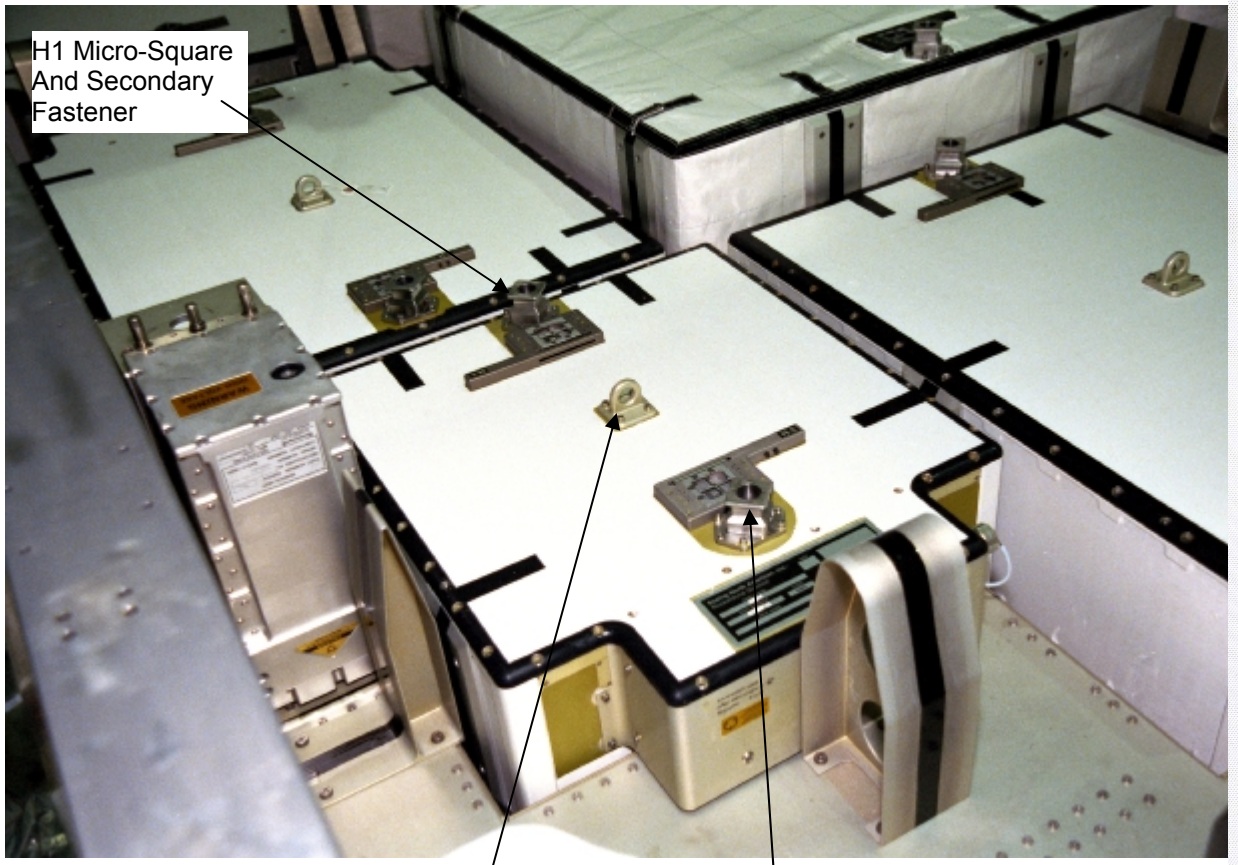

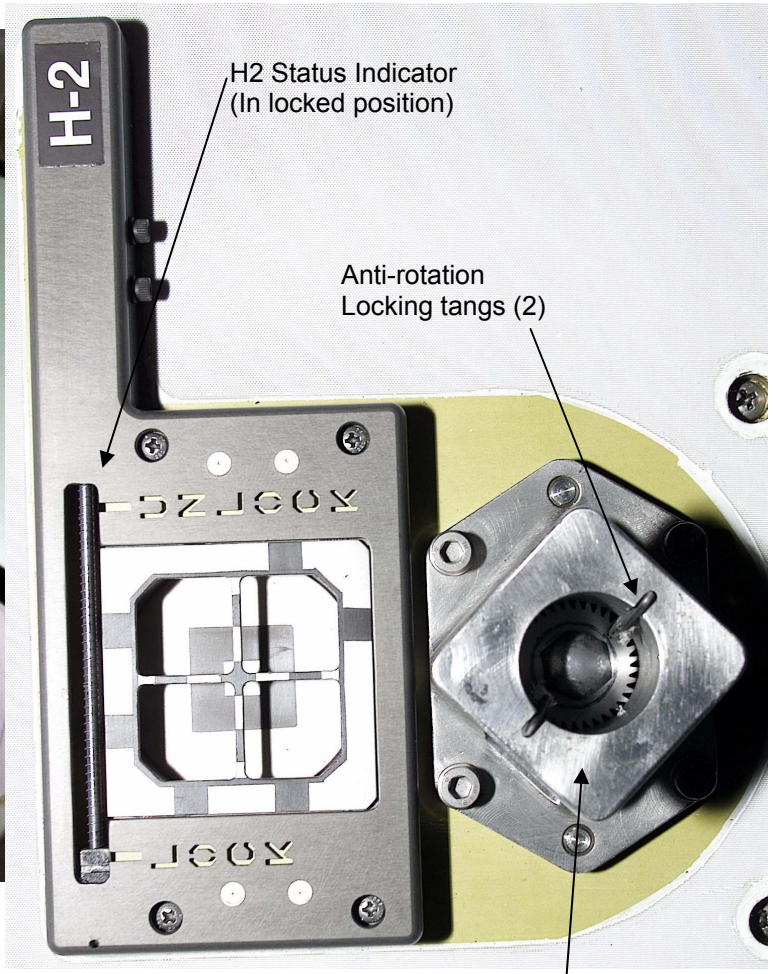

Status Indicator in Locked Position

DLA REMOVE AND REPLACE

CAUTION
1. During reinstallation of MLI covers, do not reinstall swing bolts on the outboard SARJ race ring side. This will preclude SARJ rotation.
2. Avoid contact between MLI cover and surrounding hardware.
3. Avoid impacting the race ring with the DLA when the DLA is unconstrained.
4. During follower arm rotation (90 deg turn) when the DLA is unconstrained, interference with structure may occur. The DLA must be held against the outer side of the SARJ race ring for the follower arm to rotate fully, clearing obstruction.
5. The following precautions should be observed to prevent loss of inboard MLI cover fasteners during removal: Limit turn count to minimum required for fastener release. Minimize side loading bolt head. Maintain axial force on fastener to compress spring during rotation.
6. If DLA rotation bolts 1B and 2B do not turn freely when attempting to stow the follower arms, there is still partial interference in the mechanism and additional adjustment to the draw bolts is required to prevent damage to the follower arm mechanism.

NOTE

1. Steps 1 to 3, ROTATE DLA DRAW BOLTS (1C AND 2C), are required to evenly release tension load on belleville stacks for bolts 1C and 2C.

2. Multiple iterations of DLA draw bolt adjustments may be required to allow follower arms to rotate.

3. The physical labels of the S3 DLAs do not match the logical names the software uses. To ensure that the appropriate DLA commands were sent to prepare for disengaging the DLA, two visual inspections are performed: the window on the DLA indicates “N” for neutral, and the DLA pinion gear teeth are no longer engaged on the SARJ race ring teeth.

4. The ratchet wrench is used to rotate the DLA follower arms to the stow position. This tool is utilized instead of the PGT to protect against damage to the follower arm mechanism.

DLA REMOVE AND REPLACE (Cont)

IV	EV1	EV2
MCC-H 1. Verify failed DLA is in neutral position with no motors selected and motor setpoints set to zero. Verify active DLA is in locked position with no motors selected and motor setpoints set to zero. 2. Give GO for EVA to enter SARJ worksite.	**CAUTION** The following precautions should be observed to prevent loss of inboard MLI cover fasteners during removal: Limit turn count to minimum required for fastener release. Minimize side loading bolt head. Maintain axial force on fastener to compress spring during rotation. REMOVE DLA MLI COVER 1. **PGT[A6 8.3 ft-lb, CCW2 30RPM, MTL 30.5]-6ext 7/16:** Release inboard MLI cover fasteners (four), nine turns. 2. Remove MLI cover and temp stow. 3. On IV GO, install and ingress APFR (refer to Task Data for WIF position and APFR settings). VERIFY DLA IN NEUTRAL 1. Inspect window for neutral indicator, N. 2. Verify DLA pinion gear teeth are not engaged on the SARJ race ring teeth. ROTATE DLA DRAW BOLTS (1C AND 2C) 1. **PGT[B7 25.5 ft-lb, CCW1 10RPM, MTL 30.5]-6ext 7/16:** Rotate draw bolt 1C, one turn (release tension). 2. **PGT[B7 25.5 ft-lb, CW1 10RPM, MTL 30.5]-6ext 7/16:** Rotate draw bolt 2C, three turns (release tension). 3. **PGT[B7 25.5 ft-lb, CCW1 10RPM, MTL 30.5]-6ext 7/16:** Rotate draw bolt 1C, two turns (continue releasing tension). 4. **PGT[A3 4.8 ft-lb, CCW2 30RPM, MTL 30.5]-6ext 7/16:** Rotate draw bolt 1C, ~32 turns to hard stop.	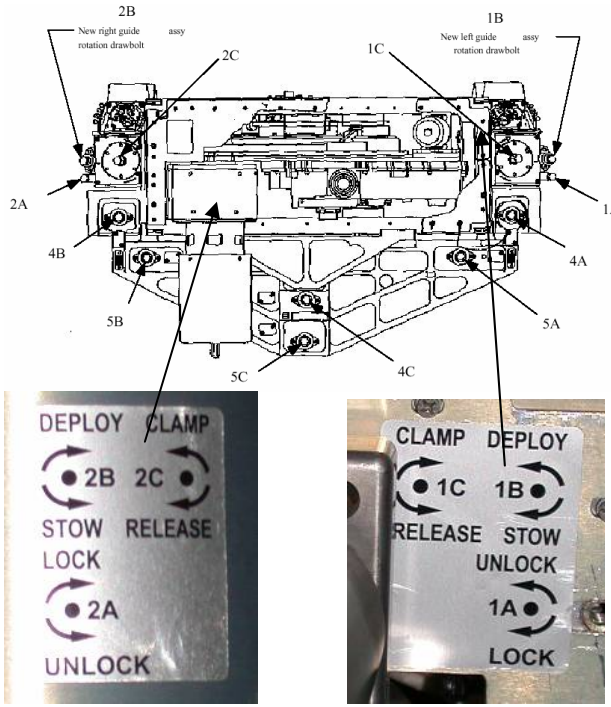 Figure 1.- DLA Bolts and Labels.

DLA REMOVE AND REPLACE (Cont)

IV	EV1	EV2
	ROTATE FOLLOWER ARMS (1B AND 2B) **CAUTION** If DLA rotation bolts 1B and 2B do not turn freely, additional adjustment to the draw bolts is required. NOTE Multiple iterations of DLA draw bolt adjustments may be required to allow follower arms to rotate. 1. **Ratchet Wrench-6ext 7/16:** Rotate draw bolt 1C, CW ~1/8 turn. 2. **Ratchet Wrench-6ext 7/16:** Rotate follower arm rotation bolt 1B, CW ~5/8 turn to hardstop. 3. If 1B bolt does not turn freely, repeat steps 1 and 2 until follower arm has rotated 90 deg. 4. **PGT[A3 4.8 ft-lb, CW2 30RPM, MTL 30.5]-6ext 7/16:** Rotate follower arm draw bolt 2C, ~32 turns to hard stop. 5. **Ratchet Wrench-6ext 7/16:** Rotate draw bolt 2C, CCW ~1/8 turn. 6. **Ratchet Wrench-6ext 7/16:** Rotate follower arm rotation bolt 2B, CCW ~5/8 turn to hardstop. 7. If 2B bolt does not turn freely, repeat steps 5 and 6 until follower arm has rotated 90 deg. REPOSITION DLA 1. Reposition DLA to launch position [approximately 1 inch away from race ring, then 0.375 inch inboard (toward S0), then 0.5 inch away from race ring]. INSTALL THREE DLA LAUNCH RESTRAINT BOLTS (4A, 4B, AND 4C) 1. **PGT[B4 19.4 ft-lb, CW2 30RPM, MTL 30.5]-6ext 7/16:** Engage launch restraint bolts 4A, 4B, and 4C, ~five to nine turns (attaches DLA frame to launch bracket). PRELOAD FOLLOWER DRAW BOLTS (1C AND 2C) AND ENGAGE DLA LOCK BOLTS (1A AND 2A) 1. **PGT[A3 4.8 ft-lb, CCW2 30RPM, MTL 30.5]-6ext 7/16:** Preload draw bolt 1C, ~zero to two turns to hardstop. 2. **PGT[A3 4.8 ft-lb, CW2 30 RPM, MTL 30.5]-6ext 7/16:** Preload draw bolt 2C, ~zero to two turns to hardstop.	

IV	EV1	EV2
	3. **PGT[A5 7.0 ft-lb, CW1 10RPM, MTL 30.5]-6ext 7/16:** Engage lock bolts 1A and 2A fasteners (two), ~six turns (engage lock preload on follower arm with lock tip bolt). RELEASE DLA CONNECTORS 1. Perform the following demates: DLA 2 DLA 1 ☐ P1 ←|→ J23 ☐ P1 ←|→ J21 ☐ P2 ←|→ J24 ☐ P2 ←|→ J22 2. Install dust caps on connectors, if available RELEASE BRACKET BOLTS 1. **PGT[B7 25.5 ft-lb, CCW2 30RPM, MTL 30.5]-6ext 7/16:** Release 5A, 5B, and 5C in any order, 8-10 turns 2. Remove DLA, lift straight up away from race ring 3. Temp stow DLA on MUT EE/Ballstack on S3 HR 3060/TBD PERFORM CLEANING/LUBING OF RACE RING Clean and lube as required ENGAGE BRACKET BOLTS 1. Retrieve DLA 2. Install DLA onto race ring 3. **PGT[B7 25.5 ft-lb, CW2 30RPM, MTL 30.5]-6ext 7/16:** Engage 5A, 5B, and 5C in any order, 8-10 turns ENGAGE DLA CONNECTORS 4. Perform the following connector mates, stowing any dust caps as reqd: DLA 2 DLA 1 ☐ P1 →|← J23 ☐ P1 →|← TBD ☐ P2 →|← J24 ☐ P2 →|← TBD ROTATE DLA DRAW BOLTS (1C AND 2C) (This decreases friction between pivot fork and follower bracket) 5. **PGT[A3 4.8 ft-lb, CW2 30 RPM, MTL 30.5]-6ext 7/16:** Rotate draw bolt 1C, 2 turns 6. **PGT[A3 4.8 ft-lb, CCW2 30 RPM, MTL 30.5]-6ext 7/16:** Rotate draw bolt 2C, 2 turns	

DLA REMOVE AND REPLACE (Cont)

IV	EV1	EV2
	BACK OFF DLA LOCK BOLTS (1A AND 2A) (Releases lock preload on follower arm, lock tip bolt retracted from follower bracket) 7. **PGT[A6 8.3 ft-lb, CCW2 30 RPM, MTL 30.5]-6ext 7/16:** Release lock bolts 1A and 2A fasteners (2), 6 turns RELEASE 3 DLA LAUNCH RESTRAINT BOLTS (4A, 4B, 4C) (This allows the DLA frame to move relative to the launch bracket) 8. **PGT[B7 25.5 ft-lb, CCW2 30 RPM, MTL 30.5]-6ext 7/16:** Release launch restraint bolts 4A, 4B, 4C, ~8-10 turns – bolt pops up REPOSITION DLA AND ROTATE FOLLOWER ARMS 9. Reconfigure **PGT[A3 4.8 ft-lb, CCW1 10 RPM, MTL 30.5]-6ext 7/16:** Reposition DLA onto race ring (approx 3/8 inch outboard, 1.5 inches radially in) Rotate follower arm rotation bolt 1B, ~5/8 turn to hardstop 10. Verify follower arm has rotated 90 deg 11. **PGT[A3 4.8 ft-lb, CW2 30 RPM, MTL 30.5]-6ext 7/16:** Rotate follower arm draw bolt 1C, ~32 turns to torque 12. Verify follower bearings are in contact with race ring 13. **PGT[A3 4.8 ft-lb, CW1 10 RPM, MTL 30.5]-6ext 7/16:** Rotate follower arm rotation bolt 2B, ~5/8 turn to hardstop 14. Verify follower arm has rotated 90 deg 15. **PGT[A3 4.8 ft-lb, CCW2 30 RPM, MTL 30.5]-6ext 7/16:** Rotate follower arm draw bolt 2C, ~32 turns to torque 16. Verify follower bearings are in contact with race ring 17. **PGT[B4 19.4 ft-lb, CCW2 30 RPM, MTL 30.5]-6ext 7/16:** Final installation torque on follower arm draw bolt 2C, ~4 turns to torque 18. **PGT[B4 19.4 ft-lb, CW2 30 RPM, MTL 30.5]-6ext 7/16:** Final installation torque on follower arm draw bolt 1C, ~4 turns to torque INSPECT DLA 19. On MCC GO, verify DLA pinion gear teeth fully engaged to SARJ race ring teeth REINSTALL DLA MLI COVER 1. **PGT[A1 2.5 ft-lb, CW2 30RPM, MTL 30.5]-6ext 7/16:** Engage inboard MLI cover fasteners (four), ~nine turns.	

DLA REMOVE AND REPLACE – TASK DATA

Table 1. Estimated Task Duration

	With SSRMS	Without SSRMS
One EV Crew	N/A	1:00
Two EV Crew	N/A	0:45

Table 2. Tools

EV1 (FF)	EV2 (FF)
PGT	PGT
6 Ext 7/16	6 Ext 7/16
APFR	
Round Scoop (optional)	

Table 3. EVA Fasteners

Fastener Name	Label	Head Size (in)	Qty	Install Torque (ft-lb)	Max Break Away Torque (ft-lb)	Failure Torque (ft-lb)	Turns	RPM
MLI Cover Inboard Fasteners	N/A	7/16	4 per cover	2.5	3.4	3.8 (Install) 13.7 (Release)	7 to 9	30
DLA 1A and 2A Lock Bolts	Yes	7/16	2	3.3 to 6.3	6.7	42.2	6	30
DLA 1C and 2C Draw Bolts	Yes	7/16	2	19.4 initial 4.8 final	25.7*	29.1 init 38.9 final	3 to 4 init 32 to 33 final	10 init 30 final
DLA 4A, 4B, and 4C Launch Restraint Bolts	Yes	7/16	3	24 to 26	25.0	50 - A and B 75 - C	4 to 6 - A and B 6 to 9 - C	30
DLA 1B and 2B Follower Arm Rotation Bolts	Yes	7/16	N/A	4.8	~1	10.6	5/8	10

*Max On-Orbit Installable Torque

Table 4. Foot Restraints

Task	WIF	APFR Setting	SARJ Angle
P3 Cover 5 DLA 1 Face 6	P3-31	7, PP, F, 12	NA
P3 Cover 20 DLA 2 Face 2	P4-04	6, PP, L, 1	180
S3 Cover 5 DLA 1 Face 2	S3-28	2, PP, F, 12	NA
S3 Cover 20 DLA 2 Face 6	S4-04	6, PP, L, 1	0

Table 5. DLA/RJMC Labeling

Location	Physical Label	Software/Logical Name
S3, Face 6	DLA 2	DLA 1
S3, Face 6	RJMC 2	RJMC 1
S3, Face 2	DLA 1	DLA 2
S3, Face 2	RJMC 1	RJMC 2
P3, Face 6	DLA 1	DLA 1
P3, Face 6	RJMC 1	RJMC 1
P3, Face 2	DLA 2	DLA 2
P3, Face 2	RJMC 2	RJMC 2

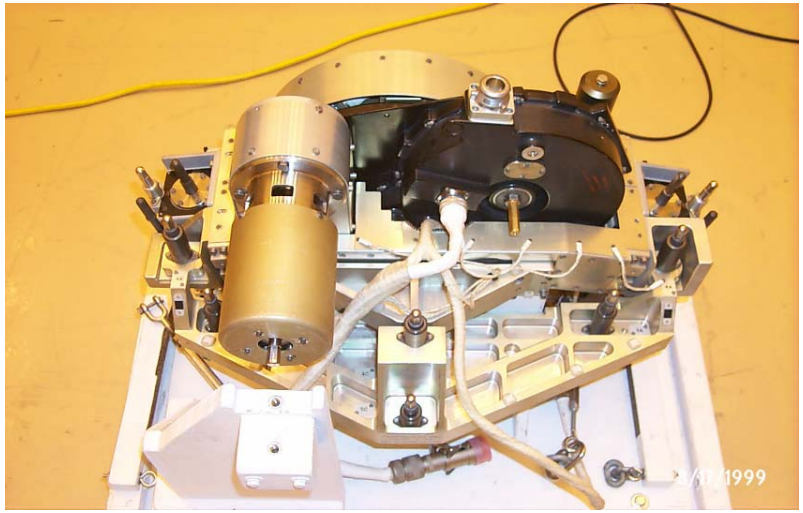

Figure 2.- DLA.

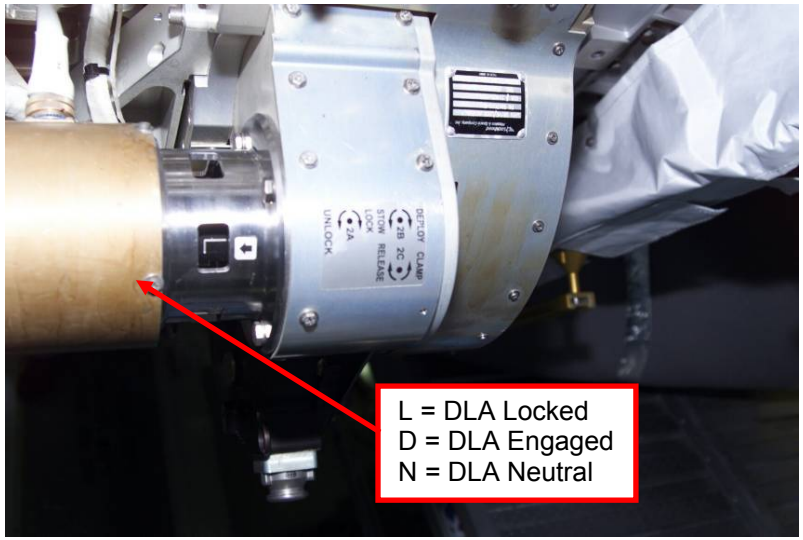

Figure 3.- DLA Window.

MBSU REMOVE/REPLACE

IV/SSRMS	EV1(SSRMS)	EV2 (FF)
IV 1. Verify with MCC S0 inhibits in place (see Task Data) IV 2. Verify with MCC ESP2 inhibits in place – RPCM N1RS2-B RPC10 (open and close inhibited) – RPCM S04B F RPC 12 (open and close inhibited) SSRMS 3. At TBD APFR install posn IV 4. Verify SSRMS in standby prior to APFR install SSRMS 5. On EV GO – to APFR Ingress posn, as reqd SSRMS 6. On EV GO – to MBSU worksite IV 7. Record s/n of failed MBSU _____	<u>S0 MBSU R&R SETUP</u> 1. Retrieve APFR from TBD location 2. Translate to SSRMS APFR install location 3. Install WIF adapter in SSRMS PFR socket, tether point toward EE 4. Install APFR (12,PP,F,6) in SSRMS WIF adapter (Toes away from EE) – Pull test – Verify APFR lock collar black on black 5. Safety tether swap to SSRMS, verify hook locked; attach A/L safety tether to nearby HR 6. GCA SSRMS for APFR ingress 7. Ingress SSRMS APFR 8. GCA SSRMS to MBSU worksite	<u>S0 MBSU R&R SETUP</u> 1. Translate to ESP2; attach BRT to ESP2 HR 8003 (aft face, stbd side) 2. Remove MLI from spare MBSU (hinge is FWD) ❑ Release Velcro tabs on front, side, and back corners of ORU base ❑ Release integral strap from underside of fwd flap ❑ Fold or roll cover toward back of MBSU, attach strap to Velcro mating swatch on back side of MLI ❑ Using side straps from front of MLI, secure rest of MLI as reqd 3. Translate up CETA Spur to S0 Face 1 4. Translate to failed MBSU 5. Verify failed MBSU P/N and s/n to IV **CAUTION** Minimize loads on H1 microfixture 6. Install Sq TM on H1 fitting; √anti-backlash neutral

MBSU REMOVE/REPLACE (Cont)

IV/SSRMS	EV1(SSRMS)	EV2 (FF)
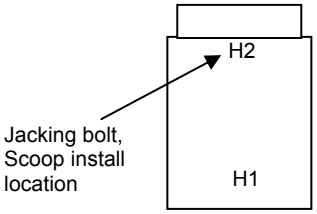	MBSU REMOVAL **CAUTION** Acme screws unfastened/fastened out of sequence could lead to jamming of MBSU **On MCC GO:** 1. **PGT [B1** 12.0 ft-lb, **CCW2** 30 RPM, MTL **30.5]-Sq TM-7/16Rec:** Drive PGT 5 turns (1 turn at bolt) on H1 2. Remove Sq TM and install on H2 fitting; √anti-backlash neutral 3. **PGT [B1** 12.0 ft-lb, **CCW2** 30 RPM, MTL **30.5]-Sq TM-7/16Rec:** Drive PGT 5 turns (1 turn at bolt) on H2 4. Transfer TM to EV2 5. **PGT [B1** 12.0 ft-lb, **CCW2** 30 RPM, MTL **30.5]-6 Ext 7/16:** Drive H1 minimum 5 turns 6. √Status indicator – UNLOCK 7. Receive Sq Scoop from EV2; install on H2 8. **PGT [B1** 12.0 ft-lb, **CCW2** 30 RPM, MTL **30.5]-6 Ext 7/16:** Drive H2 minimum 16 turns 9. √Status indicator – UNLOCK 10. Stow PGT **WARNING** Avoid contact with intermeshing fins of the MBSU and coldplate 11. Remove MBSU from coldplate (soft dock on H2 15-20 lb)	MBSU REMOVAL 1. Receive Sq TM from EV1; stow on MWS 2. Transfer Sq Scoop to EV1

MBSU REMOVE/REPLACE (Cont)

<table>
<tr><th>IV/SSRMS</th><th>EV1(SSRMS)</th><th>EV2 (FF)</th></tr>
<tr>
<td>SSRMS 8. On EV GO – to spare MBSU on ESP-2

IV 9. Record failed MBSU installation turns and torque
<table>
<tr><th>Bolt</th><th>Turns</th><th>Torque</th></tr>
<tr><td>H2</td><td></td><td></td></tr>
<tr><td>H1</td><td></td><td></td></tr>
</table>
</td>
<td><u>RETRIEVE SPARE MBSU/STOW FAILED MBSU</u>

1. GCA SSRMS to spare MBSU on ESP-2
2. Temp stow failed MBSU on ESP-2 HR 8005 using MUT EE/Ballstack (fins facing away from structure)

3. PGT [B1 12.0 ft-lb, CCW2 30 RPM, MTL 30.5]-Sq TM-7/16Rec: Drive PGT 5 turns (1 turn at bolt) on H1
4. Remove Sq TM and install on H2 fitting; √anti-backlash neutral
5. PGT [B1 12.0 ft-lb, CCW2 30 RPM, MTL 30.5]-Sq TM-7/16Rec: Drive PGT 5 turns (1 turn at bolt) on H2
6. Transfer Sq TM to EV2
7. PGT [B1 12.0 ft-lb, CCW2 30 RPM, MTL 30.5]-6 Ext 7/16: Drive H1 minimum 5 turns
8. √Status indicator – UNLOCK
9. Retrieve Sq Scoop from MWS; install on H2
10. PGT [B1 12.0 ft-lb, CCW2 30 RPM, MTL 30.5]-6 Ext 7/16: Drive H2 minimum 16 turns
11. √Status indicator – UNLOCK
12. Stow PGT
13. Remove MBSU (soft dock on H2 15-20 lb); transfer to EV2

CAUTION
Ensure ORU is level during installation to prevent damage to H2 status indicator probe

14. Install failed MBSU (soft dock on H2 15-20 lb) on FRAM
15. √Status indicator on H1and H2 are in UNLOCK
16. PGT [B3 18.4 ft-lb, CW2 30 RPM, MTL 30.5]-6 Ext-7/16 Drive H2, 16-17 turns
17. √H2 status indicator – LOCK</td>
<td><u>RETRIEVE SPARE MBSU/STOW FAILED MBSU</u>
1. Translate to ESP-2; assist with temp stow
2. Install MUT EE/Ballstack on ESP-2 HR 8005
3. Temp stow failed MBSU on ESP-2 HR 8005 using MUT EE/Ballstack (fins facing away from structure)
4. Install Sq TM on Spare MBSU H1 fitting; √anti-backlash neutral

5. Receive Sq TM from EV1; stow on MWS

6. Receive spare MBSU</td>
</tr>
</table>

MBSU REMOVE/REPLACE (Cont)

<table>
<tr><th>IV/SSRMS</th><th>EV1(SSRMS)</th><th>EV2 (FF)</th></tr>
<tr><td>SSRMS 10. On EV GO – to MBSU worksite

IV 11. Record spare MBSU installation turns and torque
<table><tr><th>Bolt</th><th>Turns</th><th>Torque</th></tr><tr><td>H2</td><td></td><td></td></tr><tr><td>H1</td><td></td><td></td></tr></table>
SSRMS 12. On EV GO – to spare safety tether location</td><td>18. PGT [B3 18.4 ft-lb, CW2 30 RPM, MTL 30.5]-6 Ext-7/16 Drive H1, 5-6 turns
19. √H1 status indicator – LOCK

20. Remove Sq Scoop; stow on MWS
21. Install thermal cover on failed unit
22. Receive spare MBSU
23. GCA SSRMS to MBSU worksite

<u>INSTALL SPARE MBSU</u>

1. Orient MBSU such that blind-mate connectors and H2 are oriented correctly

CAUTION
There is a TBD thermal dwell time between the MBSU & coldplate. Wait TBD time prior to driving bolt

2. Install spare MBSU (soft dock on H2 15-20 lbs)
3. √Status indicator on H1and H2 are in UNLOCK
4. PGT [A3 4.8 ft-lb, CW2 30 RPM, MTL 30.5]-6 Ext-7/16 Drive H2, 16-17 turns
5. √H2 status indicator – LOCK
6. PGT [A3 4.8 ft-lb, CW2 30 RPM, MTL 30.5]-6 Ext-7/16 Drive H1, 5-6 turns
7. √H1 status indicator – LOCK
8. Give MCC-H GO to restore power to MBSU

<u>CLEANUP</u>
1. GCA SSRMS to spare safety tether anchor point
2. Egress APFR; tether swap back to A/L safety tether, verify hook locked
3. Remove APFR; stow in TBD location
4. Remove WIF Adapter; stow in small trash bag</td><td>7. Transfer spare MBSU to EV1

<u>INSTALL SPARE MBSU</u>
1. Translate to worksite
2. Inspect guide rails and connectors for debris/damage
3. Assist EV1 with MBSU install

<u>CLEANUP</u>
1. Remove Sq scoop from MBSU</td></tr>
</table>

MBSU REMOVE/REPLACE – TASK DATA

Estimated Task Duration:

	With SSRMS
One EV Crew	N/A
Two EV Crew	3:00

Tools:

EV1	EV2
Square scoop	EVA Crewlock bag (optional)
PGT – 6 Ext 7/16	Square Scoop
WIF Adapter	EVA Ratchet 3/8 drive – 6 Ext 7/16 (backup)
Safety Tether (SSRMS)	Sq TM 7/16 rec
APFR	MUT EE
	Ballstack

EVA Fasteners:

Fastener Name	Label	Head Size	Qty	Install Torque (ft-lb)	Max Break Away Torque (ft-lb)	Failure Torque (ft-lb)	Turns	RPM
H1 (Secondary Bolt)	H1	7/16	1	4.8 (S0) 18.4 (FSE)	31.7	190.3 (R) 22.8 (I)	5-6	30
H2 (Primary Bolt)	H2	7/16	1	4.8 (S0) 18.4 (FSE)	33.5	188.4 (R) 27.8 (I)	16-17	30

Foot Restraints:

Task	WIF	Swing Arm Setting	APFR Setting
MBSU	SSRMS	N/A	12, PP, F, 6
MBSU 4A4B (CETA at Bay 02)	3	13, 12, GG	9, TT, F, 12
MBSU 1A1B (CETA at Bay 00)	3	13, 12, GG	9, TT, F, 12
MBSU 3A3B (CETA at Bay 00)	2	15, 12, GG	3, TT, F, 12
MBSU 2A2B (CETA at Bay 02)	2	15, 12, GG	3, TT, F, 12

ORU Data:

ORU	Part Number	Serial Number	Mass	Dimensions
MBSU 1A1B	R072591-41	X700385	236 lb	40" x 28" x 12"
MBSU 2A2B	R072591-41	X700386	236 lb	40" x 28" x 12"
MBSU 3A3B	R072591-41	C250636	236 lb	40" x 28" x 12"
MBSU 4A4B	R072591-41	C250637	236 lb	40" x 28" x 12"
Spare MBSU	R072591-41	X652064	236 lb	40" x 28" x 12"
Spare MBSU	R072591-41	TBD	236 lb	40" x 28" x 12"

Power Inhibits:

MBSU	DCSU Inhibits	MBSU Inhibits
MBSU 1A1B	DCSU 1A RBI 6 open DCSU 1B RBI 6 open	MBSU 4 RBI 6 open MBSU 4 RBI 7 open MBSU 2 RBI 14 open
MBSU 2A2B	DCSU 2A RBI 6 open DCSU 2B RBI 6 open	MBSU 1 RBI 6 open MBSU 3 RBI 7 open MBSU 1 RBI 14 open
MBSU 3A3B	DCSU 3A RBI 6 open DCSU 3B RBI 6 open	MBSU 2 RBI 6 open MBSU 2 RBI 7 open MBSU 4 RBI 14 open
MBSU 4A4B	DCSU 4A RBI 6 open DCSU 4B RBI 6 open	MBSU 3 RBI 6 open MBSU 1 RBI 7 open MBSU 3 RBI 14 open

Notes:

1. H1 is secondary bolt, H2 is primary bolt
2. NO ACTION is required when Acme screw torque and appropriate number of turns has been met and the status indicator is not at the LOCKED position. Report anomaly
3. Removing MBSU from coldplate causes H1 status indicator to move from UNLOCK to LOCK
4. There is no hard stop when releasing H1 and H2 bolts; upon release, they will free spin
5. Primary stanchion (H2) has ~15-20 lb soft dock force to overcome during MBSU removal and installation from/to FSE & coldplate
6. H1 and H2 status indicators are not identical, see drawing below

Cautions:

1. Acme screws unfastened/fastened out of sequence could lead to jamming of MBSU during removal. When unfastening Acme screws, H1 must be unfastened before H2. When fastening Acme screws, H2 must be fastened before H1
2. Ensure ORU is maintained level and perpendicular to the tiedown stanchions during installation. Failure to comply may damage H2 status indicator probe
3. Minimize force applied to H1 microfixture. It is not rated to withstand excessive loads
4. There is a TBD thermal dwell time between the MBSU and coldplate. Wait TBD time, prior to driving bolts

Warnings:

1. Hazard voltage exists at the connectors of the MBSU. MBSU must be safed before removal
2. Avoid contact with intermeshing fins of the MBSU and coldplate due to sharp edge concerns

MBSU locations

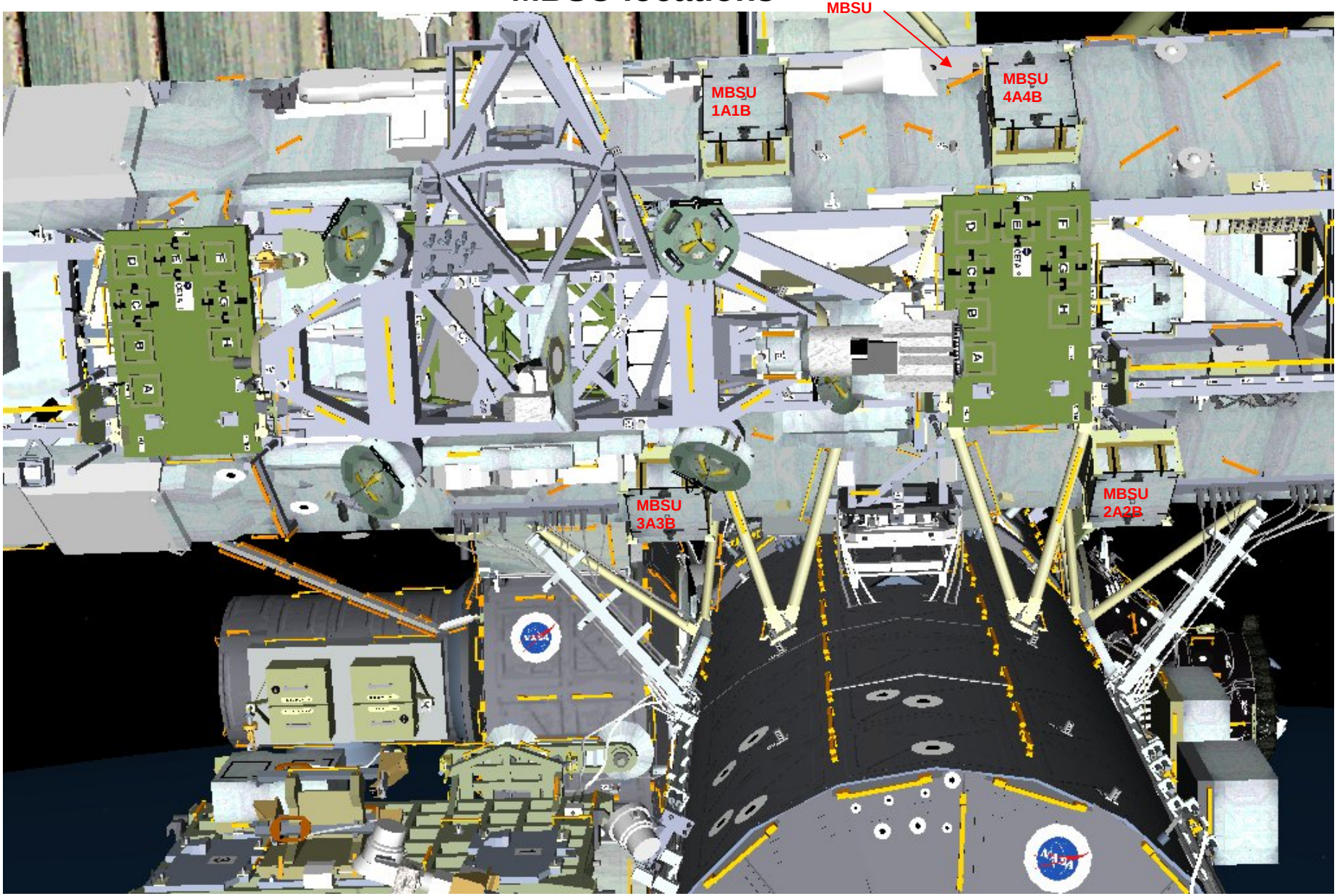

MBSU REMOVE/REPLACE – TASK DATA (Cont)

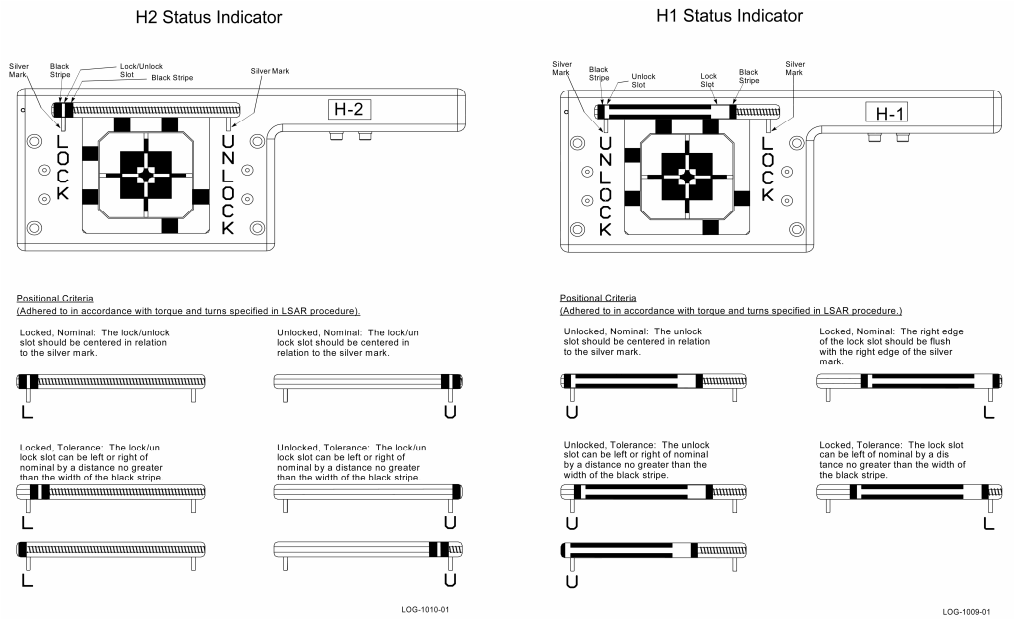

Spare MBSU w/MLI attached to FRAM on ESP-2

MBSU at worksite

RJMC REMOVE AND REPLACE

<table>
<tr><th>IV/SSRMS</th><th>EV2</th></tr>
<tr>
<td>1. Receive GO from MCC for RJMC R&R (inhibits in place)

<table>
<tr><th>Bolt</th><th>Torque</th><th>Turns</th></tr>
<tr><td>Center</td><td></td><td></td></tr>
<tr><td>Outer (fwd)</td><td></td><td></td></tr>
<tr><td>Outer (aft)</td><td></td><td></td></tr>
</table></td>
<td><u>RJMC R&R</u>
1. Translate to S3 RJMC
2. PGT[B7 25.5 ft-lb, CCW2 30 RPM, MTL 30.5]-6ext 7/16: Release outer bolts (2) to hardstop, ~13 turns
3. PGT[B7 25.5 ft-lb, CCW2 30 RPM, MTL 30.5]-6ext 7/16: Release center jack bolt to hardstop, ~28 turns
4. Remove RJMC; temp stow
5. Inspect ISS guide rails and connector receptacles
6. Retrieve new RJMC from Large ORU Bag
7. Install RJMC along guide pins into soft dock position
8. PGT[B2 16.0 ft-lb, CW2 30 RPM, MTL 30.5]-6ext 7/16: Engage center jack bolt to hardstop, 28 turns
9. PGT[B1 12.0 ft-lb, CW2 30 RPM, MTL 30.5]-6ext 7/16: Engage outer bolts (2) to hard stop, 13 turns
10. Stow old RJMC in Large ORU Bag
11. Perform Final Bag and Tool Inventory
12. Perform Glove Inspection</td>
</tr>
</table>

SSRMS JOINT DRIVE

CAUTION

Avoid contact with:

- ACU radiator surface: Silver Teflon film (white in color)
- CLA and CLPA radiator surface: Silver Teflon film (white in color)
- VDU radiator surface: Silver Teflon film (white in color)
- JEU radiator surface: Z93 paint

NOTE

Gear ratio: 3.26 EVA drive turns/1 deg of joint movement.

cw input to EVA drive will produce ccw motion of joint.

Starting from LEE, order of joints: Roll, yaw, pitch.

Signs of logical (indicated on RWS or PCS) and physical (indicated on EVA scale) angles are reversed for the shoulder roll, shoulder yaw, and wrist roll joint (i.e., +73.2 logical = -73.2 physical) regardless of which end is base

Scale and Ambiguity Switch

- ❑ Since SSRMS joints can be rotated more than 360 deg, there is an ambiguity switch that tells the crewmember whether to use positive or negative scale

- ❑ Crew reads scale using black triangle on fixed side of joint. Located to side of black triangle (~90 deg around the circumference of the joint) is the ambiguity switch. Switch has a pointer that indicates “+” or “-” to tell crew which side of scale to read. If ambiguity switch points to “+”, then crew should read off yellow scale (black text on yellow background). If switch points to “-”, then crew should read off black scale (yellow text on black background)

- ❑ EVA drive handle is on back side of joint (away from LEE), and scale triangle is across from it towards LEE side

SSRMS JOINT DRIVE (Cont)

IV/RMS	EV1	REFERENCE
SSRMS 1. <u>EVA JOINT DRIVE POSITION</u> IV 2. Record ambiguity sensor reading and joint angle: _____ Monitor SSRMS joint angle Report position to EV1 Give EV1 STOP when joint angle is at desired position Joint Scale and Black Triangle Ambiguity Switch 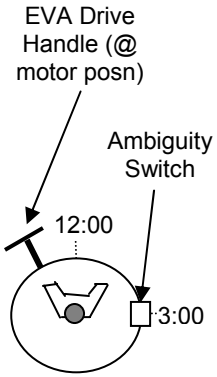 Back Side of Joint	1. Translate to failed joint 2. If required for body stabilization, install square scoop on joint micro fitting and attach BRT <u>INITIAL POSITION VERIFICATION</u> 3. Verify initial joint position using following: ❑ Black triangle on fixed side of failed joint ❑ Ambiguity sensor (90 deg cw from EVA drive, toward front side of joint) <u>JOINT EVA DRIVE</u> 4. Depress button and move EVA drive handle to EVA <u>NOTE</u> Joint will rotate in opposite direction of PGT 5. **PGT[A1 2.5 ft-lb, CW2 or CCW2 30 RPM (as required), MTL 2.5]-6 ext 7/16:** Drive EVA bolt in ± direction _____ turns to specified position 6. Verify joint angle using scale and ambiguity sensor 7. If possible, verify joint angle with IV If necessary, fine position joint using PGT in manual ratchet mode 8. Depress button and move EVA drive handle to MOTOR 9. If used, retrieve square scoop	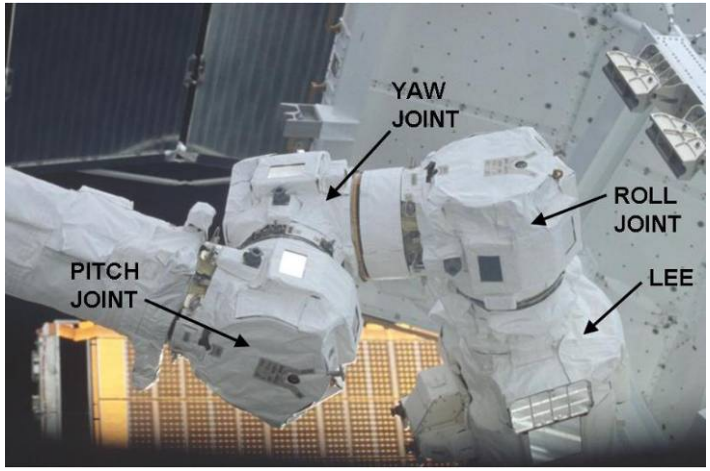 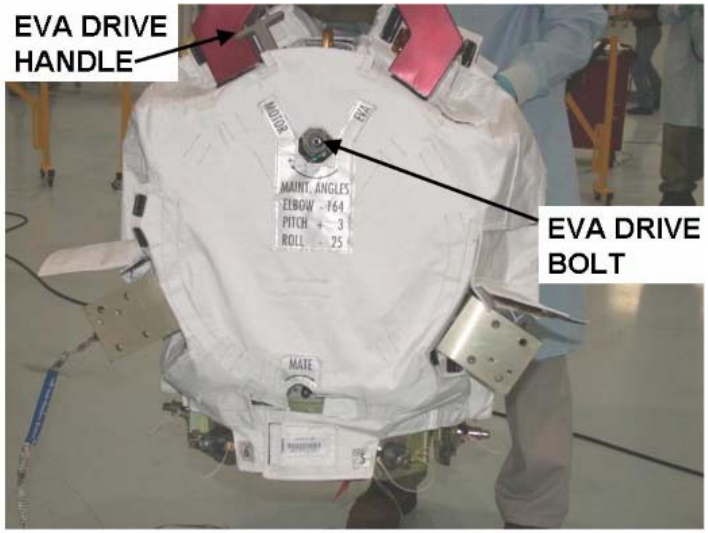

SSRMS JOINT DRIVE (Cont)

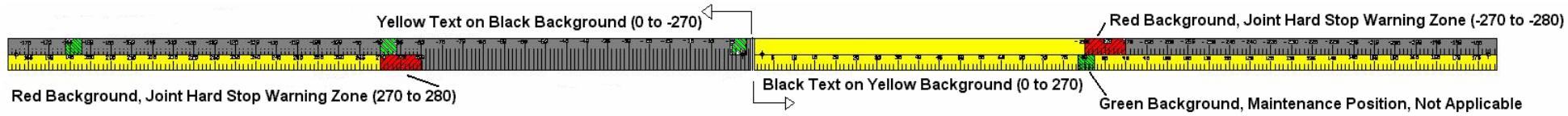

JOINT SCALE

Task Data:

Table 1. Tools

EV1 (FF)
PGT
7/16 (wobble) Socket-6 ext
BRT
Square Scoop

Table 2. EVA Fasteners

Fastener Name	Label	Head Size	Qty	Min Drive Torque (ft-lb)	Max Drive Torque (ft-lb)	Failure Torque (ft-lb)	RPM
EVA Drive		7/16-in	1	1.25	2.5		30

Foot Restraints: N/A

SSRMS JOINT DRIVE (Cont)

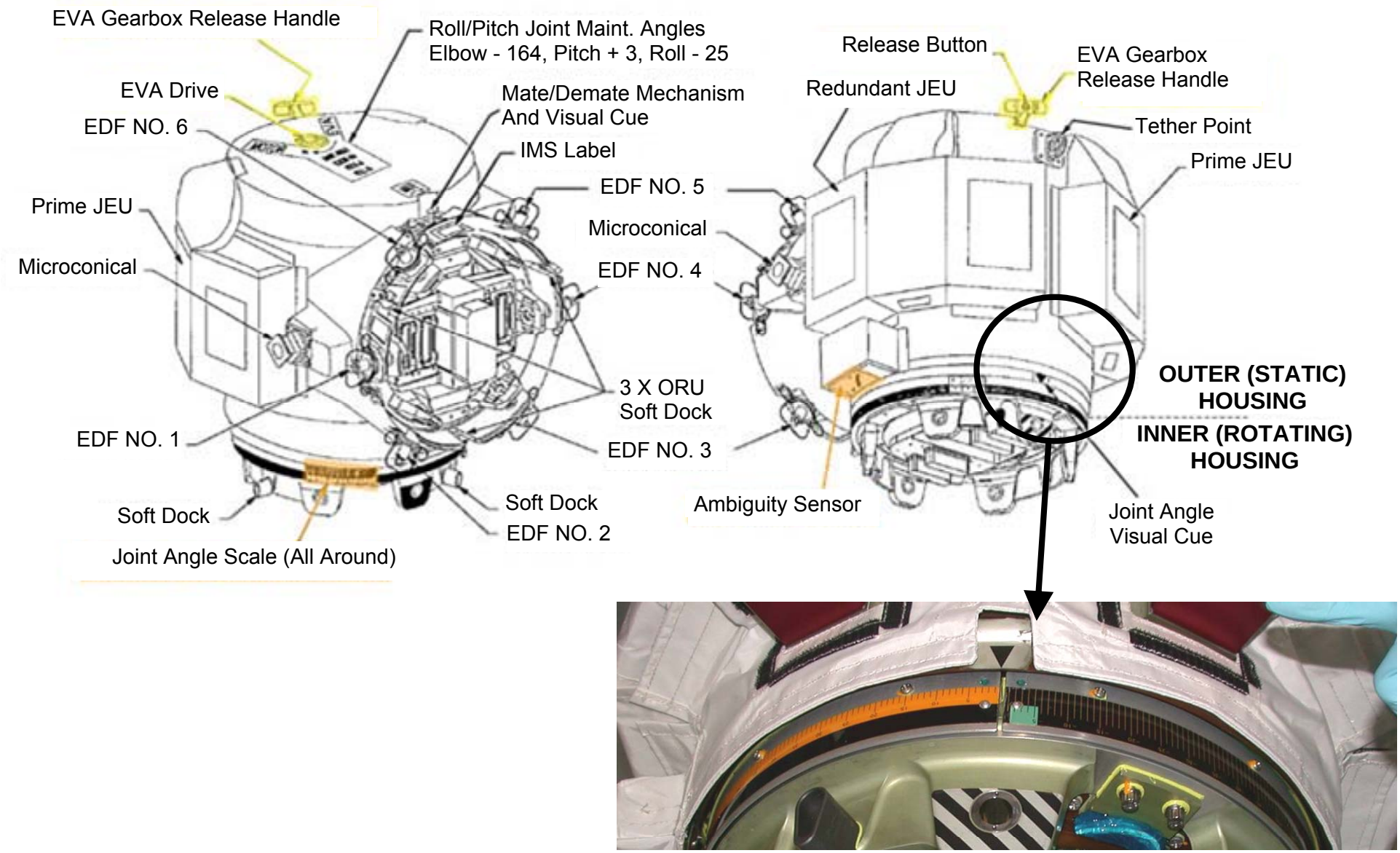

Figure 1.- Roll/Pitch Joint ORU.

SARJ – TBA REMOVE/INSTALL

Remove

WARNING
Potential exists for sharp edge hazards on the bearing package and mount. Attempt to limit contact to tether points only

1. Verify failed TBA serial number
2. Demate TBA connector P1 from inboard receptacle on SARJ ring
3. Install SARJ dust cap on receptacle
4. Install TBA dust cap on TBA connector
5. Tether to bearing package
6. Tether to mount

CAUTION
Two TBAs cannot be out at the same time unless the two TBAs are 90, 120, or 180 deg apart from each other

7. **PGT [B7 25.5 ft-lb, CCW2 30 RPM, MTL 30.5]-6ext 7/16:** Break torque on TBA bolts (3), 1 turn each
8. **PGT[B1 12.0 ft-lb, CCW2 30 RPM, MTL 30.5]-6ext 7/16:** Loosen bolt 3 (mount bolt), 1 turn
9. **PGT[B1 12.0 ft-lb, CCW2 30 RPM, MTL 30.5]-6ext 7/16:** Loosen bolt 1 (bearing preload bolt), 6 turns
10. **PGT[B1 12.0 ft-lb, CCW2 30 RPM, MTL 30.5]-6ext 7/16:** Release bolt 2 (draw bolt), 12 turns until preload arm swings open (into SARJ bearing package will also move away from SARJ and mount)
11. Verify TBA bag in open position
12. Stow bearing package in TBA bag

NOTE
Do not push in while turning mount bolt 3; will cause mount clamping leg to side load bolt 3 and increase torque

13. **PGT[B1 12.0 ft-lb, CCW2 30 RPM, MTL 30.5]-6ext 7/16:** Release bolt 3 (mount bolt), 4 turns
14. Engage mount bolt 3 with PGT and press to open mount clamping leg
15. Remove mount from race ring
16. Stow mount in TBA Bag
17. Secure bag closed, stow in ORU Bag
18. Clean and Lube Race Ring as required

Install

NOTE
Limit force to engage mount bolt 3; too much force opens mount clamping leg

1. Retrieve new mount package from bag; report serial number
2. Verify mount clamping leg is open
3. Engage mount onto race ring, aligning mount boss with slot in race ring
4. Close mount clamping leg
5. **PGT[A2 3.8 ft-lb, CW2 30 RPM, MTL 30.5]-6ext 7/16:** Engage bolt 3 (mount bolt), 2 turns
6. Retrieve bearing package; report serial number
7. Engage bearing package onto race ring, guiding bearing arm through race ring
8. **PGT[A3 4.8 ft-lb, CW2 30 RPM, MTL 30.5]-6ext 7/16:** Engage bolt 2 (draw bolt), ~10.5-13 turns to torque until preload arm engages race ring (bearing package will also move toward SARJ and mount package)
9. **PGT[A5 7.0* ft-lb, CW2 30 RPM, MTL 30.5]-6ext 7/16:** (*for Flight TBA) Engage bolt 1 (bearing preload bolt), ~5-7 turns to torque
10. **PGT[A2 3.8 ft-lb, CW2 30 RPM, MTL 30.5]-6ext 7/16:** Tighten bolt 3 (mount bolt), ~2-4 turns to torque
11. Remove dust cap on inboard receptacle; stow in TBA bag
12. Remove TBA connector dust cap; stow in TBA bag

NOTE
Verify pin and EMI band integrity; connector free of FOD

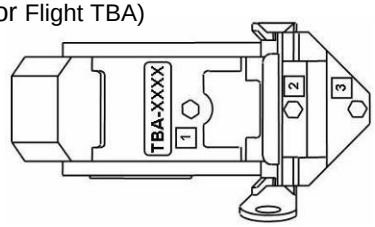

Outboard ← → Inboard

13. Mate connector to inboard receptable on SARJ race ring
14. WVS Survey of work area; clean up work area; reinstall MLI cover

TBA	s/n	Bolt 2		Bolt 1		Bolt 3	
		Turns (~10.5-13)	Torque (4.8)	Turns (~5-7)	Torque (7.0)	Turns (~2-4)	Final Torque (3.8)

SARJ – TBA INSTALL – TASK DATA

Estimated Task Duration:

	With RMS	Without RMS
One EVA Crew	N/A	
Two EVA Crew	N/A	

Tools:

EV1	EV2
PGT w/6" ext-7/16	PGT w/6" ext-7/16
Large ORU Bag	Fish Stringer
Fish Stringer	Crewlock Bag
Crewlock Bag	Grease Gun – Straight Nozzle
Grease Gun – Straight Nozzle	Grease Gun – J Nozzle
Grease Gun – J Nozzle	EVA Wipe Caddy
EVA Wipe Caddy	EVA Wipes (dry)
EVA Wipes (dry)	EVA Greased Wipes (wet)
EVA Greased Wipes (wet)	Scraper Debris Container
Scraper Debris Container	Scraper
Scraper	Large Trash Bag
Large Trash Bag	Camera
Camera w/Flash	

EVA Fasteners:

Fastener Name	Label	Qty	Head Size	Install Torque (ft-lb)	Release Torque (ft-lb)	Failure Torque (ft-lb)	Turns	RPM
TBA Bearing Preload Bolt	1	1	7/16"	STA: 12.0 Flight: 7.0	18.4	Remv: 21.2 Install: STA: 13.2 Flight: 8.3	5-7	30
TBA Draw Bolt	2	1	7/16"	4.8	18.4	Remv: 21.2 Install: 6.6	10.5-13	30
TBA Mount Bolt	3	1	7/16"	3.8	12.0	Remv: 14.6 Install: 5.1	4-6	30

EVA Connectors:

Harness	From	To	Conn Size	Function
TBA electrical harness P1	Hardwired to TBA	SARJ connector J__ (see TBA Reference Info)	15	Power and data to TBA

Figure 1. TBA Bag

SARJ – TBA INSTALL – TASK DATA (Cont)

TBA Reference Info:

TBA #	S3 TBA Serial Number	S3 Inboard SARJ Label
1	TBA-1032	J9
2	TBA-1029	J10
3	TBA-1033	J11
4	TBA-1035	J12
5	TBA-1026	J13
6	TBA-1017	J14
7	TBA-1036	J15
8	TBA-1031	J16
9	TBA-1030	J17
10	TBA-1037	J18
11	TBA-1023	J19
12	TBA-1034	J20

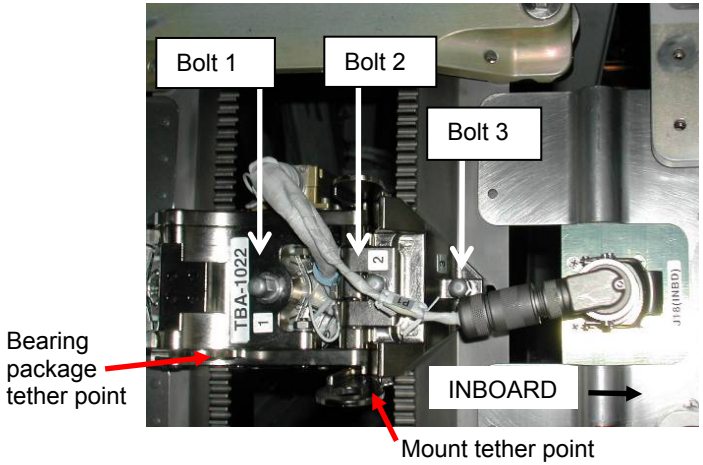

Figure 2. Trundle Bearing Assembly – Labeled

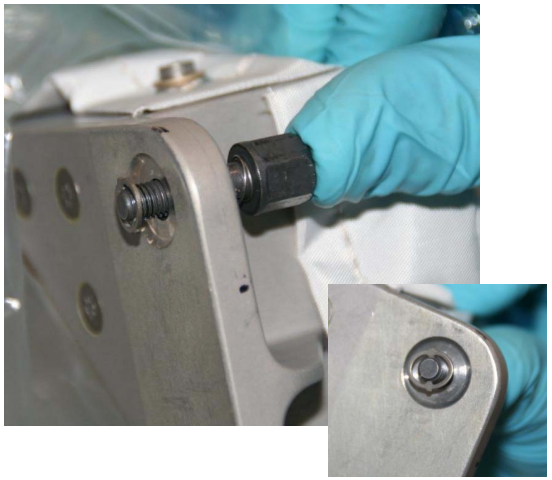

Figure 3. Fairchild Fastener

Notes:

1. Each TBA ORU consists of a bearing package and a mount assembly, which are a matched drilled set. They are always removed and replaced together, but must be separated to do so
2. The mount bolt (Bolt 3) is springloaded. When depressed with enough force (approximately 2 lb), the bolt end pushes against the threaded interface, overcoming the two ball detents that hold the clamping leg in the closed position. The clamping leg will then spring open, freeing the mount from the race ring. In order to engage the threads during TBA installation, rotation of the bolt must begin prior to pressing in on the fastener to preclude inadvertent opening of the clamping leg
3. The mount bolt (Bolt 3) must be partially released during bearing installation and removal to increase tolerance between the bearing and mount interface
4. Tether hook must be removed from mount during bearing package installation and removal due to interference
5. Clamping leg closure is accomplished by placing gloved hand through gap in the two race rings and pressing clamp against ring
6. The spare SARJ dust cap tether point is top mounted; the SARJ dust cap tether point on the outboard receptacles are side mounted
7. EVA Wipe Caddy O-rings may fail during extreme cold conditions such that EVA wipes cannot be retrieved from the caddy; such thermal extremes should not be reached during EVAs on STS-126/ULF-2
8. STA TBA Install Torque on Bolt 1 is B1 (12.0 ft-lb). Setting listed in procedure is for a Flight TBA only
9. This procedure was taken from STS-126/ULF-2. The only changes made were from STA TBA to Flight TBA and deletion of cleaning/lubing references

Cautions:

1. To prevent loss of inboard MLI cover fasteners during removal:
   Limit turn count to minimum required for fastener release
   Minimize side loading bolt head
   Maintain axial force on fastener to compress spring during rotation
2. SARJ Race Ring is not tolerant to nicks and scratches. Exercise care within the vicinity of the Race Ring while handling components
3. Two TBAs cannot be out at the same time unless the two TBAs are 90, 120, or 180 deg apart from each other
4. The port SARJ must be locked for EVA ops outboard of the starboard AJIS struts

SARJ – TBA INSTALL – TASK DATA (Cont)

Warnings:

1. Potential exists for sharp edge hazards on the TBA bearing package and mount. Attempt to limit contact to tether points only
2. Verify SARJ is locked (one DLA locked, one DLA engaged) to prevent rotation while EV crew is in vicinity of rotational plane plus 2 feet

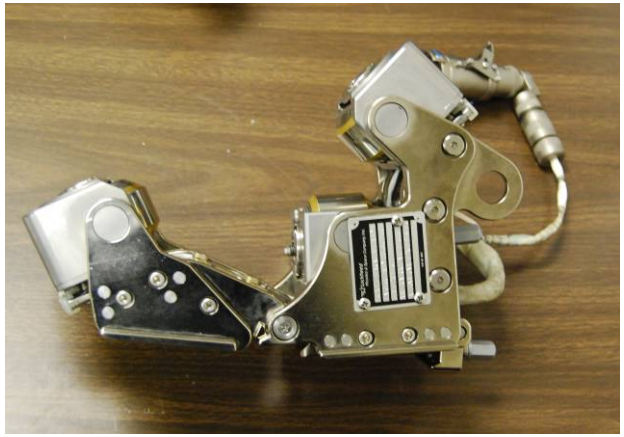

Figure 4. Bearing Package Assembly

Figure 5. Mount Assembly

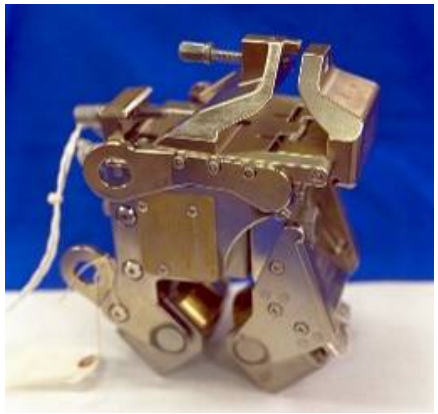

Figure 6. Trundle Bearing Assembly

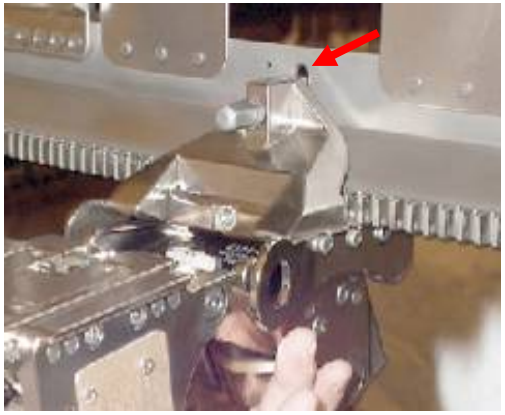

Figure 7. Slot in Race Ring to Align Mount

Figure 8. Mount Assy on Race Ring, mount leg clamp open (initial position)

Figure 9. Mount Assy on Race Ring, mount leg clamp closed (final position)

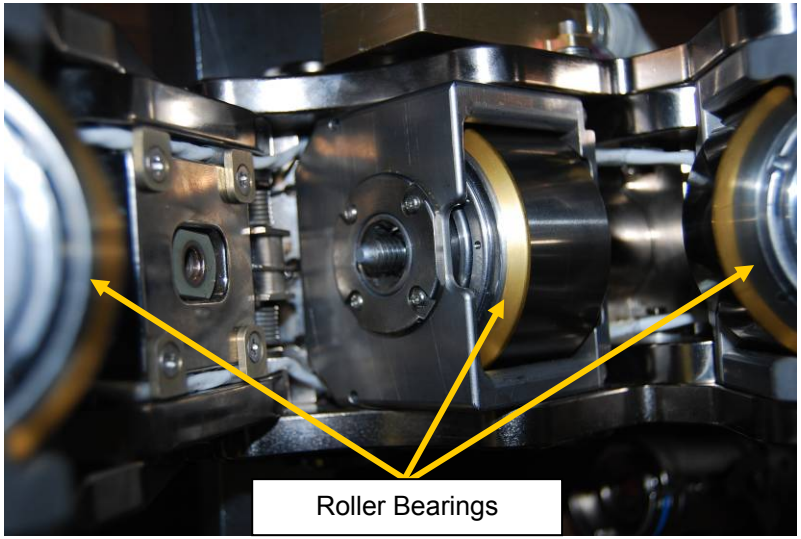

Figure 10. TBA Roller Bearings

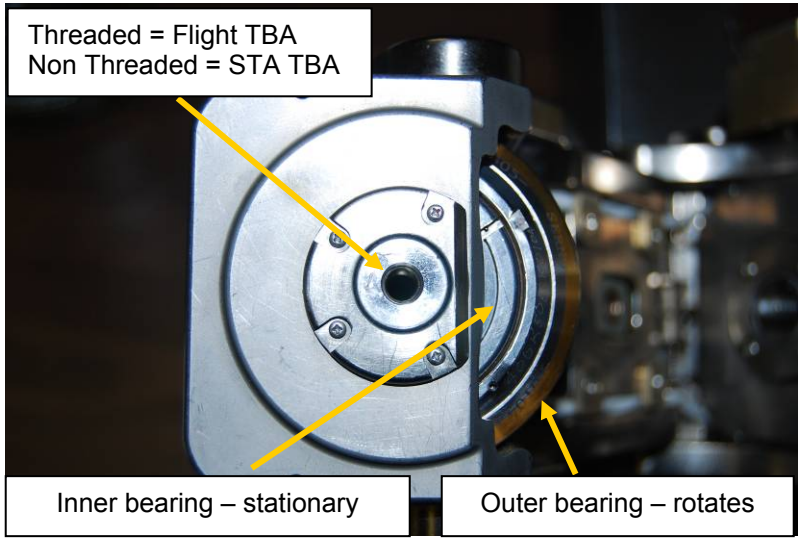

Figure 11. Roller Bearing Close-Up

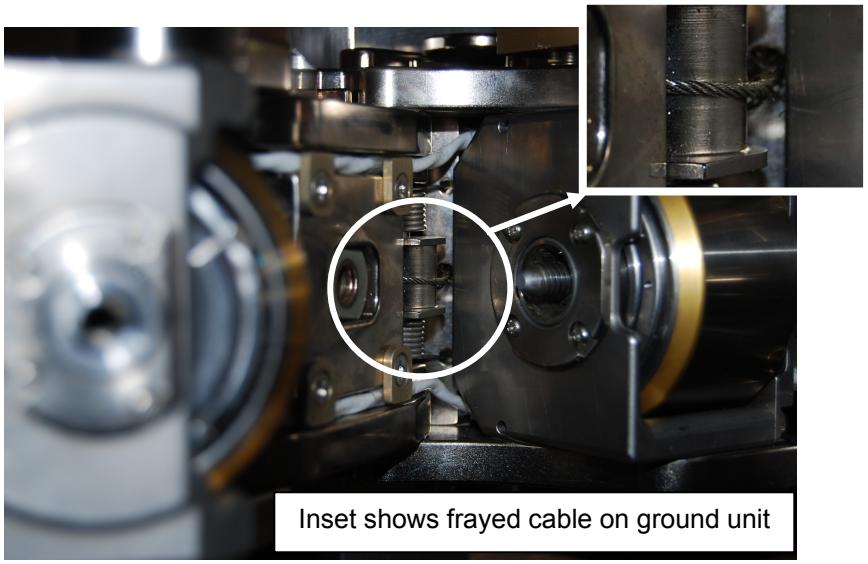

Figure 12. Bearing Package Cable

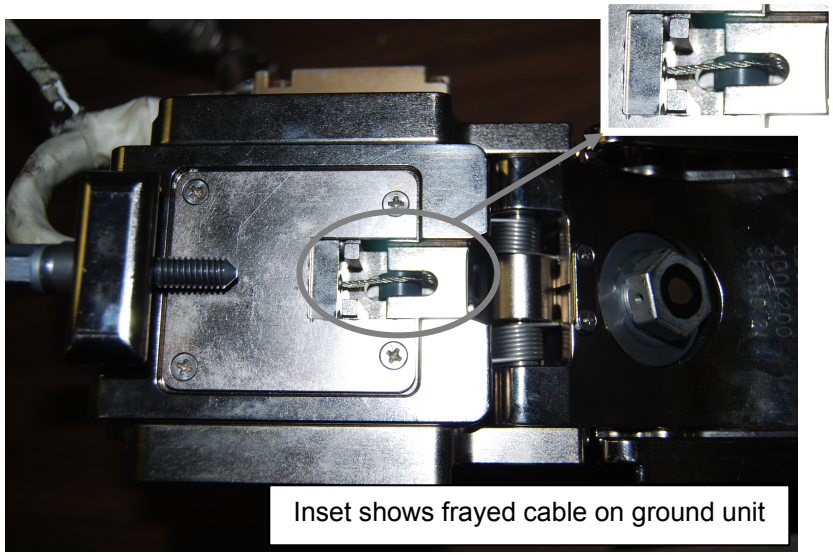

Figure 13. Bearing Package Cable – Open View

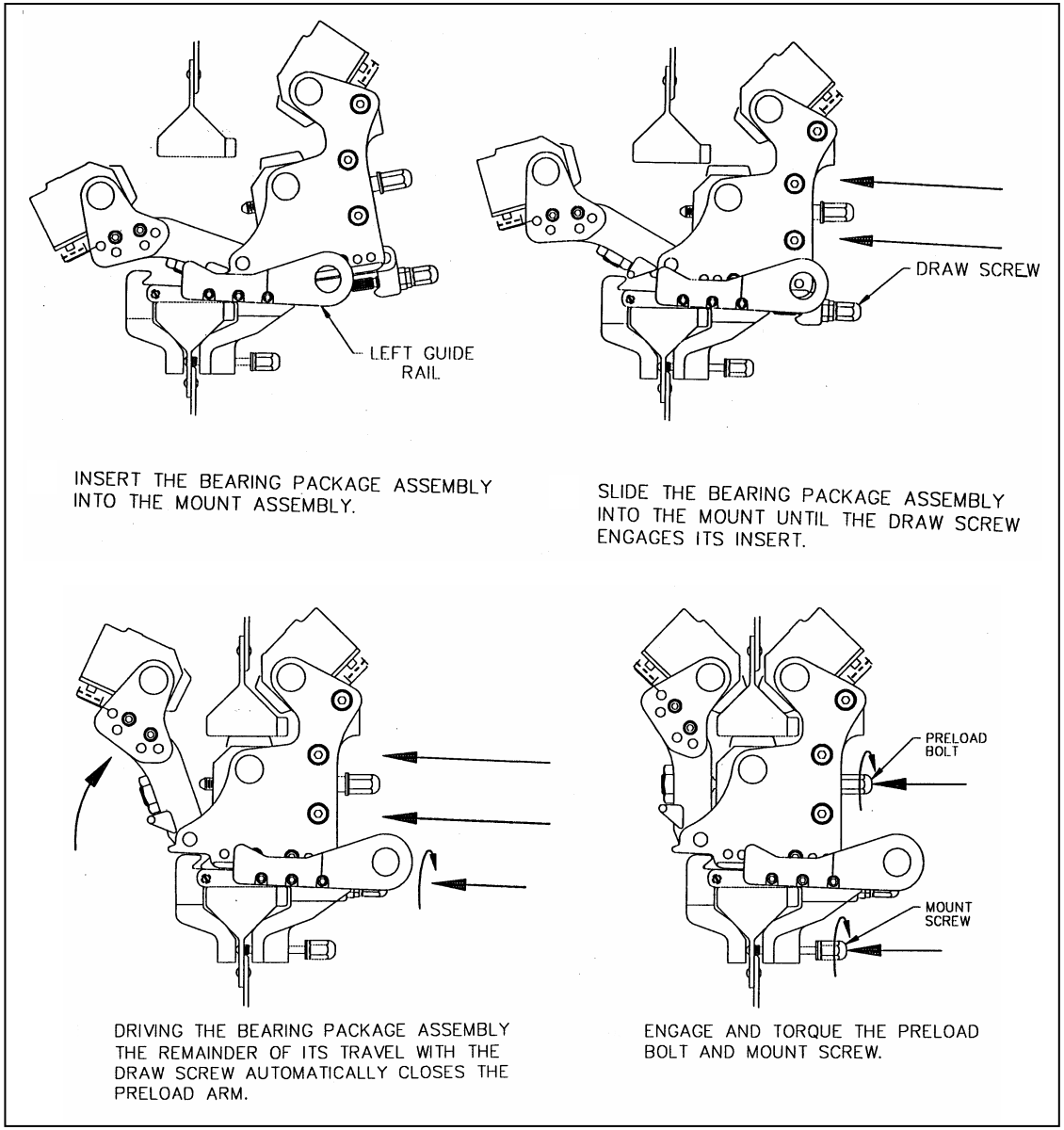

Figure 14. TBA Install Sequence

BCDU REMOVE/REPLACE

WARNING
1. Depending on worksite proximity to SAW rotation, **MCC-H** may need to inhibit SAW rotation to avoid collision with the EVA crewmembers.
2. Hazardous voltage exists at the mating connectors to the failed BCDU. BCDU interface must be safed before removal.

CAUTION
1. Acme screws unfastened/fastened out of sequence could lead to jamming of BCDU during removal/installation. When unfastening Acme screws, H1 must be unfastened before H2. When fastening Acme screws, H2 must be fastened before H1.
2. Avoid contacting BCDU mating surface (electrical connectors and cooling fins) with structure during translation with BCDU.
3. Ensure ORU is maintained level and perpendicular to stanchion during installation. Failure to comply may damage H2 status indicator probe.
4. Minimize force applied to H1 microfixture. It is not rated to withstand excessive loads.

NOTE

1. Thermal conditioning of the spare BCDU before installation may be required
2. BCDU will travel outward or inward as Acme screw H2 is unfastened or fastened.
3. Lock SARJ when translating outboard of SARJ.
4. There is no hard stop when releasing H1 and H2 bolts; upon release, they will free spin.

BCDU REMOVE/REPLACE (Cont)

IV	EV1	EV2
MCC-H 1. Verify SARJ locked 2. Verify BGAs locked 3. Verify Inhibits for spare BCDU complete. Give EV GO for spare BCDU removal.	REMOVE SPARE BCDU FROM S6 1. Translate to S6 spare BCDUs. 2. Ingress APFR. 3. Open thermal cover and tether as reqd. **CAUTION** Acme screws unfastened/fastened out of sequence could lead to jamming of BCDU. 5. Install Sq TM onto H1. √Anti-backlash – neutral 6. **PGT[B1 12.0 ft-lb, CCW2 30 RPM, MTL 30.5]-Sq TM-7/16Rec**: Drive PGT five turns (one turn at bolt) on H1. 7. Remove Sq TM; install on H2 fitting. √Anti-backlash – neutral 8. **PGT[B1 12.0 ft-lb, CCW2 30 RPM, MTL 30.5]-Sq TM-7/16Rec**: Drive PGT five turns (one turn at bolt) on H2. 9. Remove Sq TM. 10. **PGT[B1 12.0 ft-lb, CCW2 30 RPM, MTL 30.5]-6 ext 7/16**: Drive H1 minimum five turns. 11. √Status indicator – UNLOCK 12. Install Square Scoop on H2. 13. **PGT[B1 12.0 ft-lb, CCW2 30 RPM, MTL 30.5]-6 ext 7/16**: Drive H2 minimum 16 turns. 14. √Status indicator – UNLOCK 15. Remove BCDU from S6 FSE. 16. Transfer spare BCDU to EV2.	REMOVE SPARE BCDU FROM S6 1. Translate to S6 spare BCDUs. 2. Set up APFR (refer to Task Data). **CAUTION** Avoid contacting BCDU mating surface (electrical connectors and cooling fins) with structure during translation with BCDU. Minimize force applied to H1 microfixture. It is not rated to withstand excessive loads. 3. Receive spare BCDU from EV1 and stow on BRT.

BCDU REMOVE/REPLACE (Cont)

IV	EV1	EV2
IV 3. Record S/N of failed BCDU: _____ **MCC-H** 4. Verify electrical power inhibits for failed BCDU complete. Give EV GO for failed BCDU removal.	REMOVE FAILED BCDU 1. Translate to IEA worksite. 2. Set up and ingress APFR (refer to Task Data). 3. Verify failed BCDU P/N and S/N to IV. 4. Install Sq TM onto H1. √Anti-backlash – neutral 5. **On MCC-H GO**, **PGT[B1 12.0 ft-lb, CCW2 30 RPM, MTL 30.5]-Sq TM-7/16Rec**: Drive PGT five turns (one turn at bolt) on H1. 6. Remove Sq TM; Install on H2 fitting. √Anti-backlash – neutral 7. **PGT[B1 12.0 ft-lb, CCW2 30 RPM, MTL 30.5]-Sq TM-7/16**: Drive PGT five turns (one turn at bolt) on H2. 8. Remove Sq TM. 9. **PGT[B1 12.0 ft-lb, CCW2 30 RPM, MTL 30.5]-6 ext 7/16**: Drive H1 minimum five turns. 10. √Status indicator – UNLOCK 11. Install Square Scoop on H2. 12. **PGT[B1 12.0 ft-lb, CCW2 30 RPM, MTL 30.5]-6 ext 7/16**: Drive H2 minimum 16 turns. 13. √Status indicator – UNLOCK 14. Remove failed BCDU. 15. Stow failed BCDU on BRT. **CAUTION** Ensure ORU is maintained level and perpendicular to stanchion during installation. Failure to comply may damage H2 status indicator probe.	REMOVE FAILED BCDU 1. Translate to IEA worksite with spare BCDU.

BCDU REMOVE/REPLACE (Cont)

IV	EV1	EV2
IV 5. Record spare BCDU bolt data. Bolt Turns Torque H2 _____ _____ H1 _____ _____	INSTALL SPARE BCDU 1. Receive spare BCDU from EV2. 2. Install spare BCDU on IEA. 3. √Status indicators on H1 and H2 – UNLOCK 4. **PGT[A3 4.8 ft-lb, CW2 30 RPM, MTL 30.5]-6 ext-7/16:** Drive H2, 16 to 17 turns. 5. √Status indicator – LOCK 6. **PGT[A3 4.8 ft-lb, CW2 30 RPM, MTL 30.5]-6 ext-7/16:** Drive H1, five to six turns. 7. √Status indicator – LOCK 8. Remove Square Scoop from H2 fitting.	INSTALL SPARE BCDU 1. Transfer spare BCDU to EV1.
	9. Egress and remove APFR. 10. Give **MCC-H** GO to restore power to BCDU.	
IV 6. Record failed BCDU bolt data. Bolt Turns Torque H2 _____ _____ H1 _____ _____	STOW FAILED BCDU ON S6 1. Translate to S6 spare BCDUs. 2. Transfer failed BCDU to EV2.	STOW FAILED BCDU ON S6 1. Translate to S6 spare BCDUs. 2. Ingress APFR. 3. Receive failed BCDU from EV1 and install on S6. 4. √Status indicators on H1 and H2 – UNLOCK 5. **PGT[B3 18.4 ft-lb, CW2 30 RPM, MTL 30.5]-6 ext-7/16**: Drive H2, 16 to 17 turns. 6. √Status indicator – LOCK 7. **PGT[B3 18.4 ft-lb, CW2 30 RPM, MTL 30.5]-6 ext-7/16**: Drive H1, five to six turns. 8. √Status indicator – LOCK 9. Remove Square Scoop from H2 fitting. 10. Close thermal cover over BCDU. 11. Remove APFR.

BCDU REMOVE/REPLACE – TASK DATA

Estimated Task Duration

Two EV Crew	~2:30

Tools

EV1 (RMS)	EV2 (FF)
PGT	PGT
6 ext 7/16	6 ext 7/16
Square TM with 7/16 in Rec Socket	Square TM with 7/16 in Rec Socket
Square Scoop	Square Scoop
APFR	APFR
BRT	BRT

EVA Fasteners

Fastener Name	Label	Head Size (in)	Qty	Install Torque (ft-lb)	Release Torque (ft-lb)	Failure Torque (ft-lb)	Turns	RPM
Fasteners	H1	7/16	1	4.8	31.7	190.3 (Release) 22.8 (Install)	5 to 6	30
Fasteners	H2	7/16	1	4.8	33.5	188.4 (Release) 27.8 (Install)	16 to 17	30

BCDU REMOVE/REPLACE – TASK DATA (Cont)

Foot Restraints

Task	Fitting	WIF	WIF Extender	APFR Setting
Access to S6 Spare BCDU		S6 – 19		10, OO, G, 12
		S6 – 19		10, OO, F, 12
Access to IEA BCDU 2B1 (1B1)	H1	P6/S6 – 26		12, QQ, K, 12
	H2	P6/S6 – 38		9, QQ, J, 12
Access to IEA BCDU 2B2 (1B2)	H1	P6/S6 – 18		10, QQ, G, 12
	H2	P6/S6 – 22		9, QQ, E, 12
Access to IEA BCDU 2B3 (1B3)	H1	P6/S6 – 22		5, QQ, L, 12
	H2	P6/S6 – 26		3, QQ, G, 12
Access to IEA BCDU 4B1 (3B1)	H1	P6/S6 – 25		12, QQ, B, 12
	H2	P6/S6 – 21		3, QQ, G, 12
Access to IEA BCDU 4B2 (3B2)	H1	P6/S6 – 17		2, QQ, E, 12
	H2	P6/S6 – 37		3, QQ, B, 12
Access to IEA BCDU 4B3 (3B3)	H1	P6/S6 – 21		7, QQ, A, 12
	H2	P6/S6 – 25		9, QQ, E, 12
Access to IEA BCDU 2A1 (1A1)	H1	P4/S4 - 09	9, A, 1	12, QQ, G, 12
	H2	P4/S4 - 09		3, QQ, G, 12
Access to IEA BCDU 2A2 (1A2)	H1	P4/S4 - 05		2, QQ, E, 12
	H2	P4/S4 - 25		3, QQ, B, 12
Access to IEA BCDU 2A3 (1A3)	H1	P4/S4 - 09		7, QQ, A, 12
	H2	P4/S4 - 13		9, QQ, E, 12
Access to IEA BCDU 4A1 (3A1)	H1	P4/S4 - 06		10, QQ, G, 12
	H2	P4/S4 - 26	11, A, 1	3, QQ, F, 12
Access to IEA BCDU 4A2 (3A2)	H1	P4/S4 - 10	3, A, 3	3, QQ, L, 12
	H2	P4/S4 - 10		9, QQ, E, 12
Access to IEA BCDU 4A3 (3A3)	H1	P4/S4 - 14	9, A, 3	9, QQ, A, 12
	H2	P4/S4 - 14		3, QQ, G, 12

ORU Mass: 234 lbs

Inhibits

BCDU	Inhibits	BCDU	Inhibits
2B1 (P6)	DCSU 2B RBI 2 Op, Cl Inh BCDU 4B1 CP RBI Op, Cl Inh	2A1 (P4)	DCSU 2A RBI 2 Op, Cl Inh BCDU 4A1 CP RBI Op
2B2 (P6)	DCSU 2B RBI 3 Op, Cl Inh BCDU 4B2 CP RBI Op, Cl Inh	2A2 (P4)	DCSU 2A RBI 3 Op, Cl Inh BCDU 4A2 CP RBI Op
2B3 (P6)	DCSU 2B RBI 4 Op, Cl Inh BCDU 4B3 CP RBI Op, Cl Inh	2A3 (P4)	DCSU 2A RBI 4 Op, Cl Inh BCDU 4A3 CP RBI Op
4B1 (P6)	DCSU 4B RBI 2 Op, Cl Inh BCDU 2B1 CP RBI Op, Cl Inh	4A1 (P4)	DCSU 4A RBI 2 Op, Cl Inh BCDU 2A1 CP RBI Op
4B2 (P6)	DCSU 4B RBI 3 Op, Cl Inh BCDU 2B2 CP RBI Op, Cl Inh	4A2 (P4)	DCSU 4A RBI 3 Op, Cl Inh BCDU 2A2 CP RBI Op
4B3 (P6)	DCSU 4B RBI 4 Op, Cl Inh BCDU 2B3 CP RBI Op, Cl Inh	4A3 (P4)	DCSU 4A RBI 4 Op, Cl Inh BCDU 2A3 CP RBI Op
1B1 (S6)	DCSU 1B RBI 2 Op, Cl Inh BCDU 3B1 CP RBI Op, Cl Inh	1A1 (S4)	DCSU 1A RBI 2 Op, Cl Inh BCDU 3A1 CP RBI Op
1B2 (S6)	DCSU 1B RBI 3 Op, Cl Inh BCDU 3B2 CP RBI Op, Cl Inh	1A2 (S4)	DCSU 1A RBI 3 Op, Cl Inh BCDU 3A2 CP RBI Op
1B3 (S6)	DCSU 1B RBI 4 Op, Cl Inh BCDU 3B3 CP RBI Op, Cl Inh	1A3 (S4)	DCSU 1A RBI 4 Op, Cl Inh BCDU 3A3 CP RBI Op
3B1 (S6)	DCSU 3B RBI 2 Op, Cl Inh BCDU 1B1 CP RBI Op, Cl Inh	3A1 (S4)	DCSU 3A RBI 2 Op, Cl Inh BCDU 1A1 CP RBI Op
3B2 (S6)	DCSU 3B RBI 3 Op, Cl Inh BCDU 1B2 CP RBI Op, Cl Inh	3A2 (S4)	DCSU 3A RBI 3 Op, Cl Inh BCDU 1A2 CP RBI Op
3B3 (S6)	DCSU 3B RBI 4 Op, Cl Inh BCDU 1B3 CP RBI Op, Cl Inh	3A3 (S4)	DCSU 3A RBI 4 Op, Cl Inh BCDU 1A3 CP RBI Op

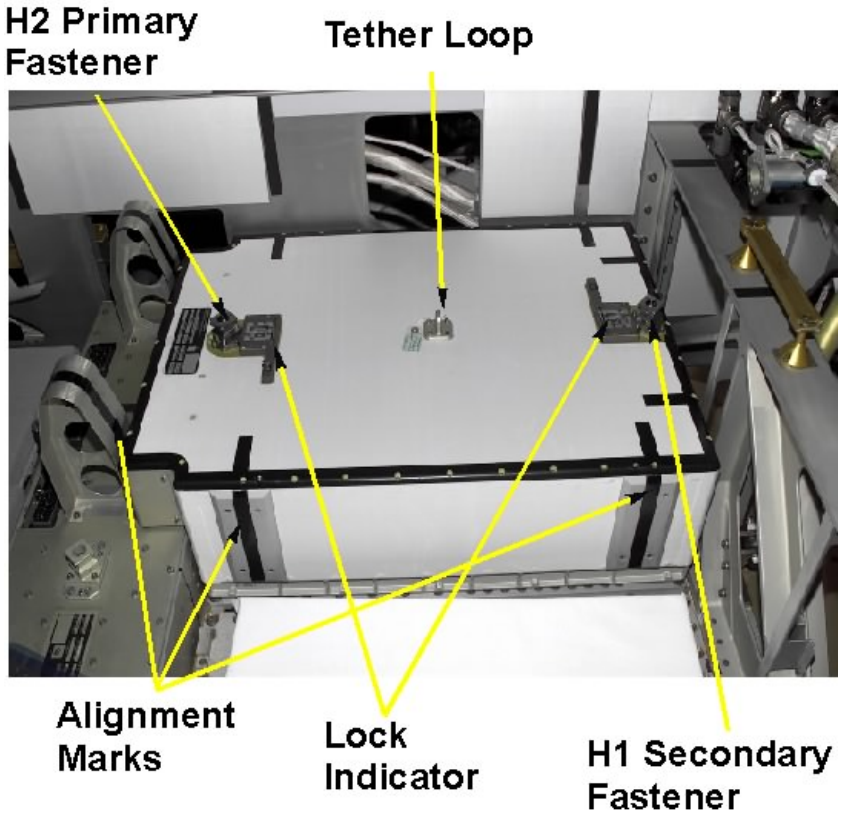

BCDU Top View

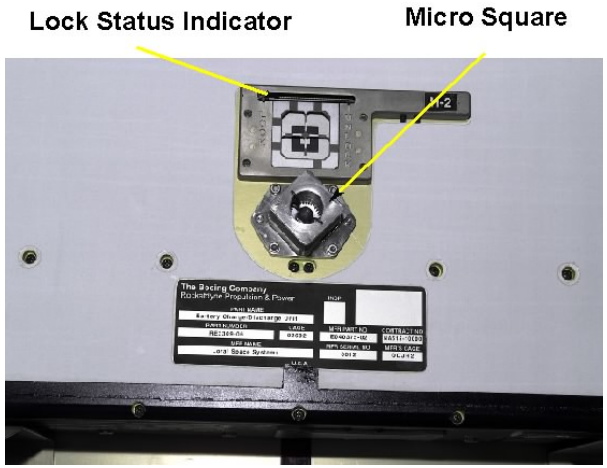

H2 Primary Fastener.

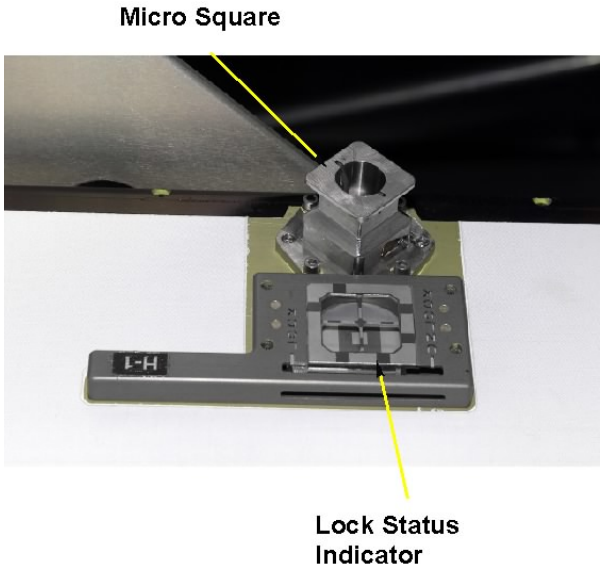

H1 Secondary Fastener.

GENERIC EVA INHIBIT PAD

Orbiter (1)

ALL EVAs

TCS
L12 1. √TCS POWER – OFF

KU-Band Antenna
MCC-H 1. √KU-BAND Mask – active
2. √KU-BAND EVA Protect Box – active

RCS
If EV crew < 27 feet from FRCS
IV 1. √DAP: VERN, FREE, LO Z (flt specific check with GNC)
O14,15,16 2. √RJDF F1, F2, F3, F4 MANF DRIVER (four) – OFF
LOGIC (four) – OFF
MCC-H 3. √Above RCS config
IV 4. √RCS F – ITEM 1 EXEC (*)
√JET DES F1U – ITEM 17 (*)
F3U – ITEM 19 (*)
F2U – ITEM 21 (*)

Ground

ALL EVAs

Ground Radar
MCC-H 1. √TOPO console, ground radar restrictions in place for EVA

LOCATION DEPENDENT INHIBITS

OBSS - LDRI
TO INHIBIT LASER FIRING BUT LEAVE HEATER POWER ON:

NOTE
This procedure works best when performed during orbital night, and OBSS must be positioned such that its diffuser window is visible in the Camera B view.

R12(VPU) 1. √Green Jumper – LDRI/ITVC
A7U 2. VIDEO OUT MON2 pb – push
IN B pb – push
OUT MON1 pb – push
IN PL2(VPU) pb – push
3. Center Cam B (ITVC) in the view of LDRI/ITVC
4. VIDEO OUT MON2 pb – push
5. Center LDRI/ITVC diffuser in the view of Cam B (ITVC)
6. CAMR CMD ZOOM – IN (FULL)
7. VIDEO OUT MUX 1 L pb – push
IN MIDDECK pb – push

NOTE
The following step will power off the LDRI laser. Observe the LDRI diffuser in the Camera B view and verify the laser turns off. Report observation to **MCC-H**.

8. LDRI MODE 1 pb – push
9. VIDEO IN as desired (not MIDDECK)

POINT PTU/LDRI AWAY FROM EV CREW

A7U 10. VIDEO OUT MON1 pb – push
IN PL2(VPU) pb – push
11. CAMR CMD PAN/TILT – HI RATE
PAN – L (to hard stop)
TILT – UP (to hard stop)
PAN/TILT – RESET
PAN/TILT – HI RATE (LO within 10°)
PAN: TBD
TILT: TBD
R12(OBSS) 12. ITVC ENA – OFF

GENERIC EVA INHIBIT PAD (Cont)

Orbiter (2)

LOCATION DEPENDENT INHIBITS (Cont)

OBSS - LCS

TO INHIBIT LASER FIRING BUT LEAVE HEATER POWER ON:

IV 1. Perform LCC DEACTIVATION step 1 (FDF P/TV CUE CARD, LCS).

To shut down and remove all power to LCS (and ROEU if flown)

> NOTE
> These steps remove all power from LCS sensor and start a 105-minute thermal clock.

IV 2. Perform LCH DEACTIVATION (FDF P/TV CUE CARD, LCS).

R1 3. √PRI PL MNC – OFF (tb-OFF)

A6U 4. √PL RETEN PL SEL – 1

EFGF Connector

> NOTE
> These steps remove all power from both OBSS sensors and start a 90-minute thermal clock.

IV 1. √DEACTIVATION complete (FDF P/TV CUE CARD, LDRI/ITVC)

2. √LCC DEACTIVATION complete (FDF P/TV CUE CARD, LCS)

3. √LCH DEACTIVATION complete (FDF P/TV CUE CARD, LCS)

S-Band Antennas

> NOTE
> Possible loss of comm when forced LL FWD antenna.

IV If EV crew < 2 feet from S-Band antenna

A1R 1. S-BAND FM ANT – XMIT LOWER/RCVR UPPER

2. √**MCC**, lower antenna selected

If no comm, or **On MCC GO**

C3 3. S-BAND PM ANT – LL FWD

When EVA crewmember at least 2 feet away from all S-Band upper antennas

C3 4. S-BAND PM ANT – GPC

USOS (1)

ALL EVAs

PCU

> NOTE
> PCUs may require up to a 1-hour warmup period before they are operational.

MCC-H 1. √PCUs (two) operational in discharge mode and one of the following:

a. CCS PCU EVA hazard control FDIR enabled.

b. No more than two arrays unshunted and oriented <105º from velocity vector.

If one or both PCUs failed

2. No more than two arrays unshunted and oriented <105º from velocity vector.

LOCATION DEPENDENT INHIBITS

Lab Window

IV If EV crew less than 10 feet from window or in window FOV, close window shutter

KU-Band (SGANT Antenna)_

MCC-H If EV crew < 3.3 feet from KU-BAND antenna

1. Park KU-BAND

1.1 Pointing Mode – Inhibit

1.2 PLC – Reset

1.3 Autotrack Continuous Retry – Inhibit

S-Band (SASA) Antennas

MCC-H If EV crew < 3.6 feet from S1 SASA [P1 SASA]

1. P1 SASA (S1 SASA) – Active

2. S1 SASA [P1 SASA] – Powered down

Mobile Transporter

MCC-H If EV crew <1.5 meters from MT

1. √MT latched

GENERIC EVA INHIBIT PAD (Cont)

USOS (2)

LOCATION DEPENDENT INHIBITS

SARJ
MCC-H If EV crew working within 2 feet or outboard of SARJ
1. √DLA (1) – LOCKED
2. All motor setpoints set to zero.
3. All motors deselected.

TRRJ
MCC-H If EV crew working within 2 feet of P1 TRRJ rotation envelope
1. √DLA (1) – LOCKED

MCC-H If EV crew working within 2 feet of S1 TRRJ rotation envelope
1. √DLA (1) – LOCKED

FPMU
MCC-H If EV crew working within 5 feet of Floating Potential Measurement Unit
1. FPMU power – Off

SSPTS
MCC-H If EV crew working within 2 ft of SSPTS cables
1. RPCM LA1A4A D RPC 3 – Open, Close Cmd Inhibit
2. RPCM LA2A3B D RPC 1 – Open, Close Cmd Inhibit
3. RPCM Z14B A RPC 2 – Open, Close Cmd Inhibit
4. RPCM Z13B A RPC 2 – Open, Close Cmd Inhibit

COL (1)

ALL EVAs

EuTEF
COL-CC 1. √PLEGpay Power Status (ETF_PLEGPAY_Pwr_Stat) – OFF

LOCATION DEPENDENT INHIBITS

EuTEF
COL-CC If EV crew expected to contact EuTEF verify FEEDER 1 Power – OFF 40 minutes prior to contact

JEM (1)

LOCATION DEPENDENT INHIBITS

JPM Windows
IV If EV crew translating on JPM port end cone, window shutters.

JEMRMS
SSIPC If EV crew working within vicinity of JEMRMS
1. RIP MA Brake – ON
2. MDP Main Mode – Stby Mode

or
1. JEMRMS Rack – OFF

JPM PROX Antenna
SSIPC If EV crew working within 0.3 ft. JPM PROX Antenna
1. TRX Power – OFF
2. TX Power – OFF

or
1. JPM PROX Antennas – OFF

GENERIC EVA INHIBIT PAD (Cont)

RSOS (1)

ALL EVAs

SM Antennas

IV
1. GTS – Deactivate
2. ARISS (Ham Radio) – Deactivate or VHF (144-146 MHz) TX only

EVAS ON PMA 1 OR RSOS (LOCATION DEPENDENT)

FGB Thrusters

MCC-M
1. √FGB MCS unpowered
2. √All FGB Attitude Control Thruster Valves (eighty) – closed
3. √FGB Attitude Control Manifold Valves – closed
   КШК1, КШК2, КШК4, КШК5, КШК9,ОКО3, ОКГ3, ОКО6, ОКГ6, ОКО7, ОКГ 7, ОКО8, ОКГ8

Soyuz Thrusters

MCC-M
1. √Soyuz manifolds (four) – closed
   ЭКО1, ЭКО2, ЭКГ1, ЭКГ2
2. √Soyuz MCS unpowered
3. √Soyuz Attitude Control Thruster Valves (fifty-two) – closed
4. √Soyuz Main Engine Valves (K1, K2, K3, K4, K5, K6) – closed

FGB Antennas

MCC-M
1. √FGB KURS P [КУРС P] – Deactivated

Soyuz Antennas

MCC-M
1. √Soyuz KURS A [КУРС A] – Deactivated

GENERIC EVA INHIBIT PAD (Cont)

RSOS (2)

ADDITIONAL ANTENNA INHIBITS FOR EVAS ON RSOS
(LOCATION DEPENDENT)

FGB Antennas

MCC-M	1. √TORU [ТОРУ]	– Deactivated
	2. √TV System [ТВС]	– Deactivated
	3. √KURS A [КУРС А]	– Deactivated
	4. Radiotelemetry [БР-9ЦУ-8]	– Deactivate
	5. √TV System [КЛ-108А]	– Deactivated
	6. √CNPMS [СИТНП]	– Deactivated
	7. √KOMPARUS [КИС]	– Deactivated
IV	8. √Sirius (VHF Ham Radio)	– Deactivated

SM Antennas

MCC-M	1. VHF-1, VHF-2 [СТТС]	– Deactivate
	2. BITS [БИТС2-12]	– Deactivate
	3. √TV System [ТВС]	– Deactivated
	4. REGUL [РЕГУЛ]	– Deactivate
	5. √LIRA [ОНА]	– Deactivated
	6. √Orbit Radio Tracking System [РКО]	– Deactivated
	7. √Kurs P [КУРС Р]	– Deactivated
IV	8. ARISS VHF (Ham Radio)	– Deactivate

Soyuz Antennas

MCC-M	1. √Teleoperator	– Deactivated
	2. √Telemetry	– Deactivated
	3. √TV	– Deactivated
	4. √Tracking	– Deactivated
	5. √Command (OMNI)	– Deactivated

Progress Antennas

MCC-M	1. √Teleoperator	– Deactivated
	2. √Telemetry	– Deactivated
	3. √TV	– Deactivated
	4. √Tracking	– Deactivated
	5. √Command (OMNI)	– Deactivated
	6. √KURS A [КУРС А]	– Deactivated

ADDITIONAL THRUSTER INHIBITS FOR EVAS ON RSOS
(LOCATION DEPENDENT)

SM Thrusters

MCC-M
1. √SM MCS – INDICATOR MODE or CMGTA with Thrusters Disabled
2. √SM Manifold valves (four) closed
   ККГ1, ККГ2, ККО1, ККО2
3. √SM Attitude Control Thruster Valves (sixty-four) – closed
4. √SM Main Engine Thruster Valves (four) – closed
5. √SM Reboost manifold valves (four) – closed
   КМГ1, КМГ2, КМО1, КМО2

Progress Thrusters

MCC-M
1. √Progress Manifold Valves (four) – closed
   ЭКО1, ЭКО2, ЭКГ1, ЭКГ2
2. √Progress Attitude Control Thruster Valves (fifty-six) – closed
3. √Progress Main Engine Valves (K1, K2, K3, K4, K5, K6) – closed

GENERIC NOTES, CAUTIONS, & WARNINGS

NOTES

1. Bolt install: Report torque and turns
2. Bolt release: Report torque and turns if different from published range
3. EVA connectors: After disconnection and prior to connection; verify pin and EMI band integrity; verify connector free of FOD
4. Inspect QDs for damage prior to mating
5. Toolbox doors must be closed with one latch per door when EV crew not in immediate vicinity
6. Avoid contact with OBSS striker bars (Vitrolube coating)

CAUTION

ISS Constraints

A. Avoid inadvertent contact with
1. Grapple fixture shafts (drylube)
2. PIP pins
3. EVA Crane [PMA1]
4. TCS Reflectors [PMA2,PMA3]
5. APAS hardware [PMA2,PMA3]
6. CETA Lights (Z-93 paint) [LAB,S1,Node 1]
7. Deployed MISSEs [Columbus EPF]
8. Passive UMAs
9. MBS/SSRMS/SPDM/JEMRMS taped radiative surfaces: VDU, ACU, JEU, LEU, MCU, CRPCMs, and Cameras
10. Deployed TUS cable [Nadir CETA rail]
11. S0 aft face Radiator
12. GPS Antennas (S13 paint) [S0,JLP]
13. UHF Antennas [LAB,P1]
14. ETCS Radiator flexhoses and panels [S1,P1]
15. EETCS/PV Radiator flexhoses, bellows and panels [P6,P4,S4,S6]
16. SASA RF Group [S1,P1]
17. Heat pipe radiators [Z1]
18. PCU cathode and HCA ports [Z1]
19. Ku-Band Antenna (SGANT) dish [Z1]
20. CMG cover/shells [Z1]
21. SPDM SJEU, EP, OTCM, LEU, and LEE VDU Radiator surfaces
22. Open CBM petal covers, LAB window shutter, and JPM window shutter
23. FPMU [S1]
24. OTSD
25. COL HAM radio antennas [COL-Nadir]
26. JTVE Cameras [JEM]
27. JEM A/L Target and Pins
28. S0/Node 2 Fluid Tray Hardlines at Node 2 end are limited to 25 lb

CAUTION

ISS Constraints (Cont)

B. Electrical cables
1. Avoid bend radii < 10 times cable diameter

C. Fiber optic cables
1. Avoid bend radii < 10 times cable diameter
2. Avoid pulling on cable during mate/demate

D. Fluid line flex hoses and QDs
1. Avoid bend radii < 5 in for hoses with diameter < 1 in on LAB, S0, S1, P1, and 10 in for hoses with diameter < 1 in on all other elements
2. Avoid bend radii < 14 in for hoses with a diameter ≥ 1 in
3. Additional care should be taken to not exceed bend radii when applying loads at the flexible hose to rigid tube stub interfaces
4. Ensure fluid QD booties are fully closed prior to leaving worksite; wire tie if reqd

E. For structural reasons
1. Avoid vigorous body motions, quick grabs and kickoffs against tether restraints
2. Avoid performing shaking motions (sinusoidal functions) more than four cycles
3. Avoid kicking S1/P1 radiator beam. If any of these occur, wait 2 to 5 min to allow structural response to dissipate

GENERIC NOTES, CAUTIONS, & WARNINGS (Cont)

CAUTION

ISS Constraints (Cont)

F. Other
1. ITT Cannon connector: On demated connectors, do not rotate collar or manipulate cable/connector using collar or connector tool
2. WIS Antennas: Do not use as handholds [Node 1,Lab,P6,Z1]
3. Lubricant from Ku-Band SGANT gimbals [Z1], CMGs [Z1], and RTAS Ground Strap fasteners [P6,P4,S4,S6] can contaminate EMU
4. MLI handholds are not rated for crewmember translation loads
5. CBM petal covers may not be used as handholds unless both launch restraint pins are engaged
6. Prevent inadvertent contact of the tether shuttle with ETRS when the P3 Tether Shuttle Stop is raised away from the rail

CAUTION

Shuttle Constraints

G. Avoid inadvertent contact with
1. OBSS and SRMS Composite Sections Joint Torque Arms, Grapple Fixture Shafts, and Cable Harnesses
2. LCS (silver Teflon) and LDRI (silver Teflon) and ITVC (gold foil) [OBSS]
3. WVS Antenna [ODS Truss & PLB Sill]
4. Payload Bay and Camera wire harnesses, cables, cable guides, and connectors

H. No touch
1. LDRI diffuser [OBSS]
2. OBSS saddle contacts (when OBSS unberthed) [OBSS]
3. Monkey fur [PLB]
4. Cameras: Metallic surfaces [PLB]
5. Ku-Band Antenna black dish and gold thermal blankets [PLB]

CAUTION

HTV/HTV EP Constraints

A. Avoid inadvertent contact with
1. EVA Cover [HTV] (does not meet EVA kick loads)
2. Wheel guide [HTV] (snag hazard)
3. HBCS (berthing camera) [HTV EP]
4. HCSM (solid lubricant) [HTV EP]
5. HCAM (solid lubricant) [HTV EP]
6. EP PIU (solid lubricant and Black/White Paint) [HTV EP]

GENERIC NOTES, CAUTIONS, & WARNINGS (Cont)

WARNING

ISS Constraints

A. Avoid inadvertent contact with
1. Grapple fixture targets and target pins
2. SSU, ECU, beta gimbal platform, mast canister, SAW blanket boxes unless the beta gimbal is locked and the motor is turned off
3. Stay inboard of SARJ when active
4. Stay 2 ft from S1/P1 radiator beam rotational envelope when beam is free to rotate
5. Stay 5 ft from moving MT on face 1
6. SOLAR and EuTEF [COL EPF]

B. Handrails
1. Handrails previously used for MISSE attachment may not be used as a safety tether point [A/L endcone 564 & 566, A/L Tank 2 nad/fwd & port/fwd, P6 5389]

C. Pinch
1. NZGL connector linkage. Use caution when mating/locking
2. ITT Cannon Connector rotating housing
3. EV side of IV Hatch during Hatch operation (also snag hazard) [A/L]
4. LAB window shutter and CBM petal cover and JPM window shutter linkages during operation
5. JEMRMS HRM capture latches
6. JEM Cameras (JVTEs, EVE, WVE)
7. JEM EFBM capture latches

D. QDs
1. If QD is in FID when valve is opened (bail fwd), QD will leak and fluid line may whip
2. Do not rotate if in mated/valve open config

WARNING

ISS Constraints (Cont)

E. RF radiation exposure
1. Stay 3.6 ft from S-Band (SASA) high gain Antenna when powered [S1,P1]
2. Stay 1.3 ft from S-Band (SASA) low gain Antenna when powered [S1,P1]
3. Stay 1 ft from UHF Antenna when powered [LAB,P1]
4. Stay 0.3 ft from fwd/aft JPM PROX antenna

F. Sharp Edges
1. Inner edges of WIF sockets
2. APFR active WIF probes
3. Mating surfaces of EVA connectors Avoid side loads during connector mating
4. Back side of MMOD shield fasteners Spring loaded captive EVA fasteners (e.g., 6B-boxes, BMRRM, RTAS, SARJ Covers); the end of the spring may protrude
5. PMA umbilical launch restraints-exposed bolt threads
6. Adjustable Fuse Tether (Fish Stringer) buckles stowed in Node Bag
7. Nickel coated braided copper Ground Straps may contain frayed wires [P6,P4,S4,S6]
8. SPDM OTCM gripper jaws

WARNING

ISS Constraints (Cont)

F. Sharp Edges (Cont)
9. Solar Array Blanket Box [P6,S6]
10. Keep hands away from SSRMS LEE/POA/SPDM LEE/JEMRMS EE opening, snares, and PDGF curvic coupling (teeth)
11. Fastener threads on back of Z1 U-jumper male FQD panel, if nutplate cap missing
12. Outboard MT rail attachment lug near P6 handrail 5333 and gap spanner
13. P2 connector on EWIS box TAA-06 [Zenith/Forward Corner 1 of P5 – SARJ at 0 deg]
14. Port/Aft portion of A/L circular HR [HR 0506]
15. Interior of JEMRMS HRMs
16. JEM A/L hatch corners

G. Thermal
1. EVA connectors with booties may become hot if left uncovered. Handling may need to be limited
2. PMA handrails may be hot. Handling may need to be limited
3. Turn off glove heaters when comfortable temp reached to prevent bladder damage. Do not pull fingers out of gloves when heaters are on
4. Uncovered trunnion pins may be hot
5. SSRMS/MBS/SPDM/JEMRMS/JTVE operating cameras and lights may radiate large amounts of heat

WARNING

ISS Constraints (Cont)

G. Thermal (Cont)
6. Stay ≥ 1 ft away from PMAs and MMOD shields > 270 degF if EMU sun visor up; limit time to 15 min or less if > 300 degF
7. Stay at least 0.5 ft away from PMA and MMOD shields > 325 degF
8. Do not touch EMU protective visor if temp has been < -134 degF for > 15 min
9. No EMU TMG contact with PMAs and MMOD shields > 320 degF
10. No EMU boot contact with foot restraint when temp < -120 degF or > 200 degF
11. Columbus end cones may violate touch temperature constraints when $-75 \leq \beta \leq -60$ or $60 \leq \beta \leq 75$V
12. PDGF surfaces may not meet touch temperature requirements for unlimited contact when $\beta \leq -70$ or $\beta \geq 70$
13. JPM port end cones and JLP port nadir may violate touch temperature constraints when $\beta > 60$ deg

H. Electrical Shock
1. Stay ≥ 2 ft from ungrounded floating connectors if not unpowered
   - SSPTS connectors include NOD1 Stbd/Fwd HR 0130, LAB Stbd/Fwd HR 0273, PMA2 Stbd and Port

WARNING

ISS Constraints (Cont)

H. Electrical Shock (Cont)
   - MBS Cross-Connect jumpers (translate past these using UMA handrails) include S0 EVA Power Cables (inside S0 Bay 00 Face 4, Bay 01 Face 3) ESP2 jumper (inside S0 Bay 03 Face 4)
2. Do not touch SPDM CLPA 1 electrical connector prior to camera installation

WARNING

Shuttle Constraints

A. Arcing/Molten Debris
1. Stay ≥ 2 ft from exposed EFGF connector when OBSS berthed, powered, and EFGF not grappled [PLB]
2. Stay ≥ 2 ft from exposed Stbd Fwd MPM contacts [PLB]
3. Stay above PLB sill when within 1 ft of powered ROEU connector [PLB]

B. Pinch
1. PRLA operation [PLB]

C. RF radiation exposure
1. Stay 3.28 ft from S-Band Antenna when powered
2. Stay 1 ft from top and side of UHF PLB Antenna radome surface when in high powered mode [ODS truss]
3. Stay 0.33 ft from top and side of UHF PLB Antenna radome surface when in low powered mode [ODS truss]
4. Remain below the level of the PLB door mold line for first 20 in Aft of Fwd bulkhead when S-Band Antenna powered [PLB]
5. Remain on the inboard side of the Stbd slidewire (sill handrails if slidewire not installed) for first 20 ft Aft of Fwd bulkhead when Ku-Band Antenna powered [PLB]

GENERIC NOTES, CAUTIONS, & WARNINGS (Cont)

WARNING

Shuttle Constraints (Cont)

D. Sharp Edges
1. PRLA grounding wipers [PLB]
2. LDRI baffles (also an entrapment hazard) [OBSS]
3. Keep hands away from SRMS EE opening and snares
4. TCS connector backshells have exposed threads [ODS]

E. Thermal
1. Illuminated PLB lights; do not touch
2. OBSS grapple fixture shafts/cams may be hot. Limit handling if required
3. Stay 27 ft from PRCS when powered
4. Stay 3 ft from VRCS when powered
5. Stay 3 ft from APU when operating

F. Contamination
1. Stay out of the immediate vicinity of leaking jet or APU

G. Lasers
1. Do not look at LDRI diffuser or LCS laser aperture window

WARNING

HTV/HTV EP Constraints

A. Avoid inadvertent contact with
1. HTV solar array panels (kick loads can shatter panel and generate sharp edges) [HTV]
2. HTV fwd RCS thrusters [HTV]

B. Pinch
1. HSM connector moving parts (pinch hazard and dry film lube) [HTV EP]
2. EP wheels (pinch point) [HTV EP]

C. RF radiation exposure
1. Stay 0.7 ft from IOS-N antenna [HTV]
2. Stay 0.7 ft from IOS-Z antenna [HTV]
3. Stay 0.3 ft from PLS-Z antenna [HTV]

PAYLOAD BAY CONFIGURATION ..... FS 18-3
S6
S6 OVERVIEW ..... FS 18-4
S6 LONG SPACER ..... FS 18-5
S6 IEA (NON-KEEL SIDE) AND NON-PVR SIDE ..... FS 18-8
S6 IEA (KEEL SIDE) AND NON-PVR SIDE ..... FS 18-9
S6 IEA (KEEL SIDE) AND PVR SIDE ..... FS 18-10
S6 STARBOARD, NON-KEEL UP ..... FS 18-11
S6 STARBOARD, KEEL UP ..... FS 18-12
GAP CHECK TOOL ..... FS 18-13
S5 CAPTURE LATCH ASSEMBLY (CLA) ..... FS 18-14
S6 SSU SHROUD MLI FOLDING SEQUENCE ..... FS 18-15
SAW
BGA PRIMARY POWER CABLE CLAMPS ..... FS 18-16
RELEASE BETA GIMBAL LAUNCH RESTRAINTS ..... FS 18-17
FOUR BAR IN LOCKED POSITION ..... FS 18-18
SABB UNSTOW ..... FS 18-19
4-BAR STOWED AND DEPLOYED CONFIGURATIONS ..... FS 18-22
MAST CANISTER MDA ..... FS 18-23
CETA CART
CETA CART – TOP VIEW ..... FS 18-24
CETA CART – SWING ARMS AND WIF MARKINGS ..... FS 18-25
CETA CART – COUPLERS ..... FS 18-26
CETA CART – WHEEL BOGIES ..... FS 18-27
SPDM/SSRMS
SPDM ASSY ..... FS 18-28
SPDM CAMERA LIGHT ASSY (CLA) ..... FS 18-29
SPDM CAMERA LIGHT PAN TILT ASSY (CLPA) ..... FS 18-31
SPDM ORU TOOL CHANGEOUT MECHANISM (OTCM) ..... FS 18-33
SPDM ELECTRONICS PLATFORM (EP) #1 ..... FS 18-35
SPDM ELECTRONICS PLATFORM 1 (EP1) COVER ..... FS 18-37
LEE SNARE REPAIR ..... FS 18-38
UCCAS/PAS
UCCAS/PAS DEPLOY ..... FS 18-40
JLP
JLP GPS ANTENNA WITH COVER ..... FS 18-43
JLP GPS ANTENNA OVERVIEW ..... FS 18-44
JLP GPS ANTENNA CABLE/CONNECTOR LOCATION AND ID ..... FS 18-46
WETA
WETA ASSY AND S3 CP1 INSTALL BRACKET ..... FS 18-47
CP1 WETA INSTALL ..... FS 18-48
ETVCG DUMMY BOX ..... FS 18-49
MISC
S0 1A_D RPCM ..... FS 18-50
CONNECTOR GROUNDING SLEEVES ..... FS 18-51
ORU CONTINGENCY TIE-DOWN DEFINITIONS ..... FS 18-52

This Page Intentionally Blank

PAYLOAD BAY CONFIGURATION

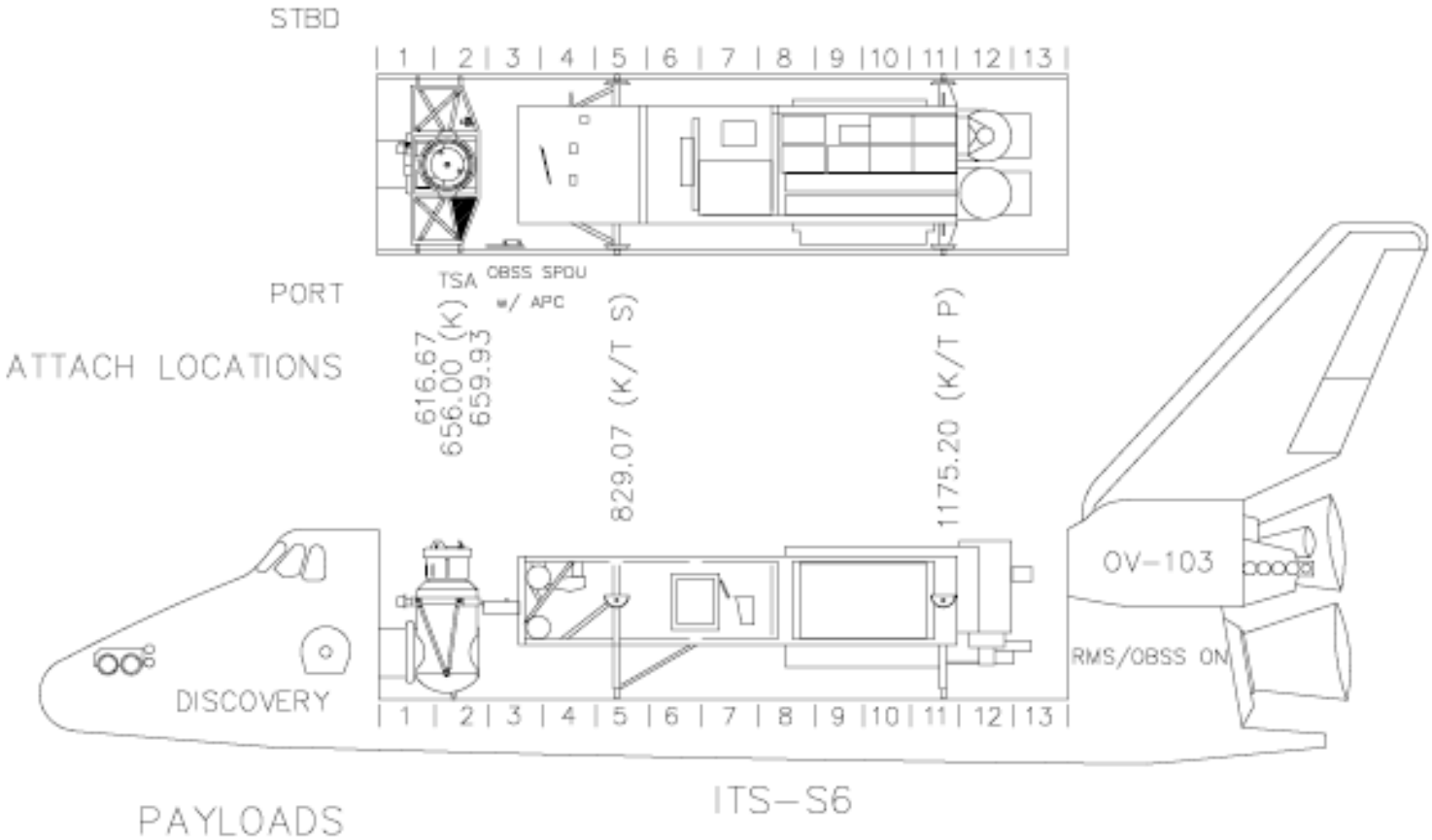

S6 OVERVIEW

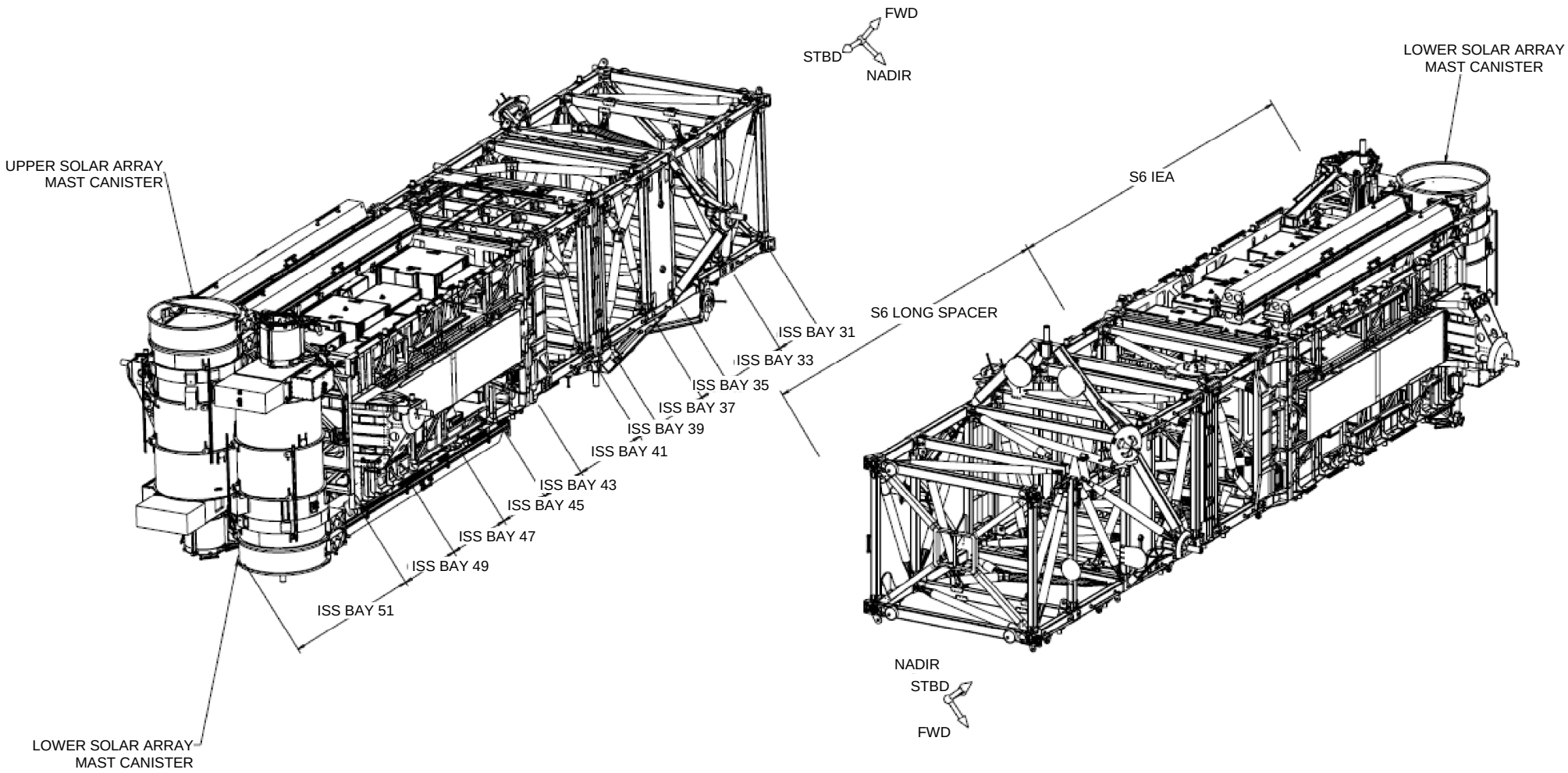
FWD
STBD
NADIR
UPPER SOLAR ARRAY MAST CANISTER
LOWER SOLAR ARRAY MAST CANISTER
S6 IEA
S6 LONG SPACER
ISS BAY 31
ISS BAY 33
ISS BAY 35
ISS BAY 37
ISS BAY 39
ISS BAY 41
ISS BAY 43
ISS BAY 45
ISS BAY 47
ISS BAY 49
ISS BAY 51
LOWER SOLAR ARRAY MAST CANISTER
NADIR
STBD
FWD

S6 LONG SPACER

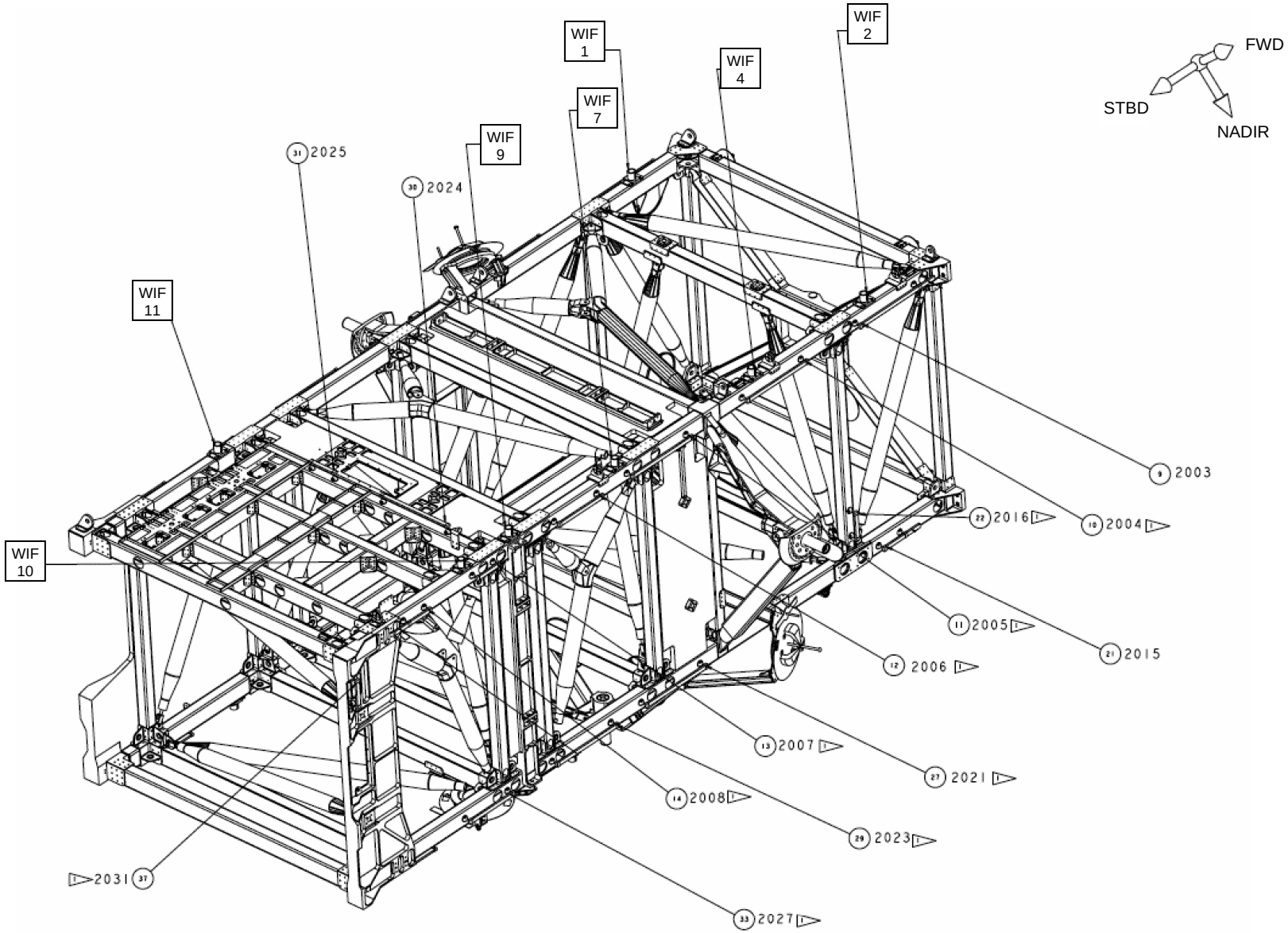

S6 LONG SPACER (Cont)

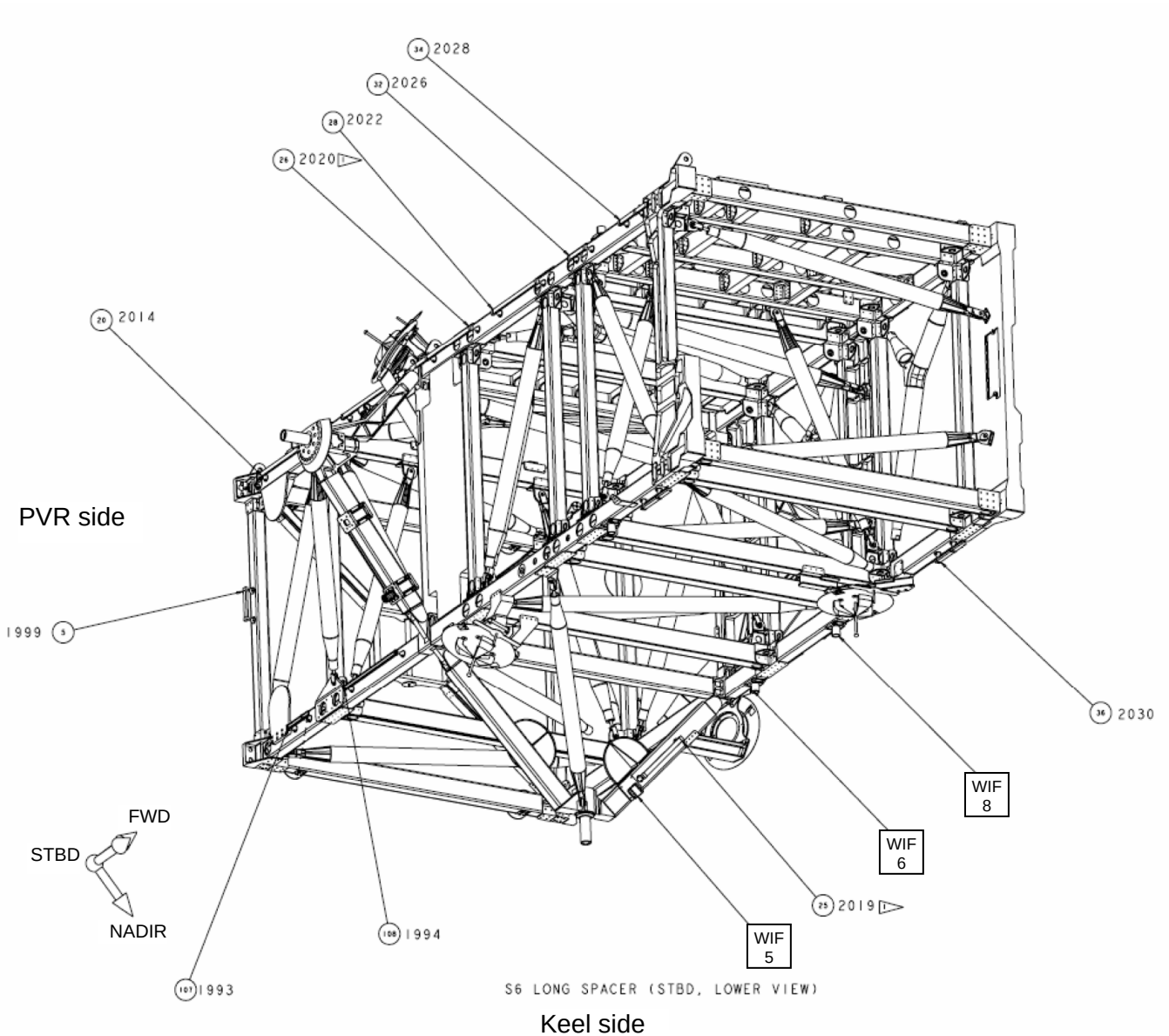

S6 LONG SPACER (Cont)

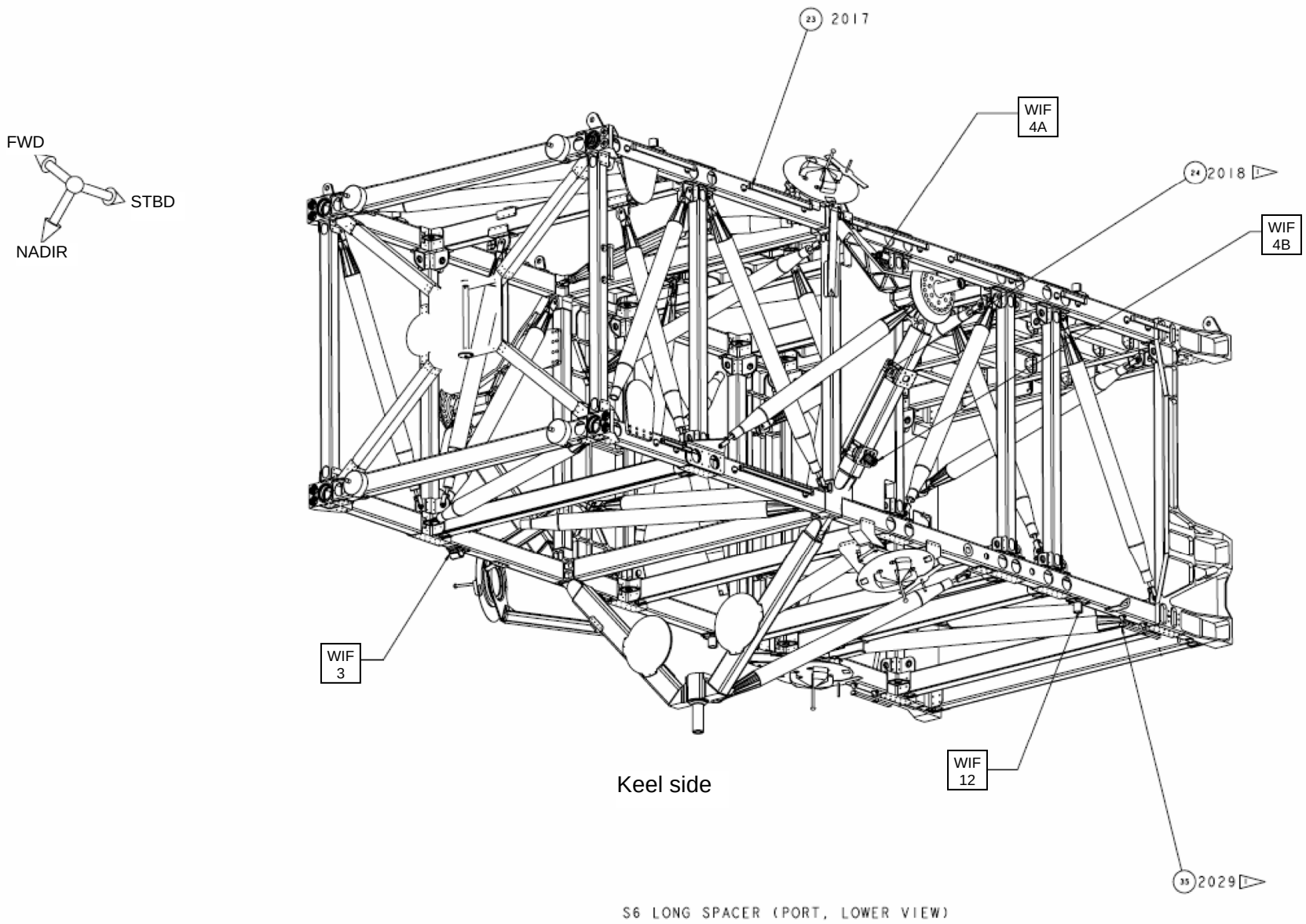

S6 IEA (NON-KEEL SIDE) AND NON-PVR SIDE

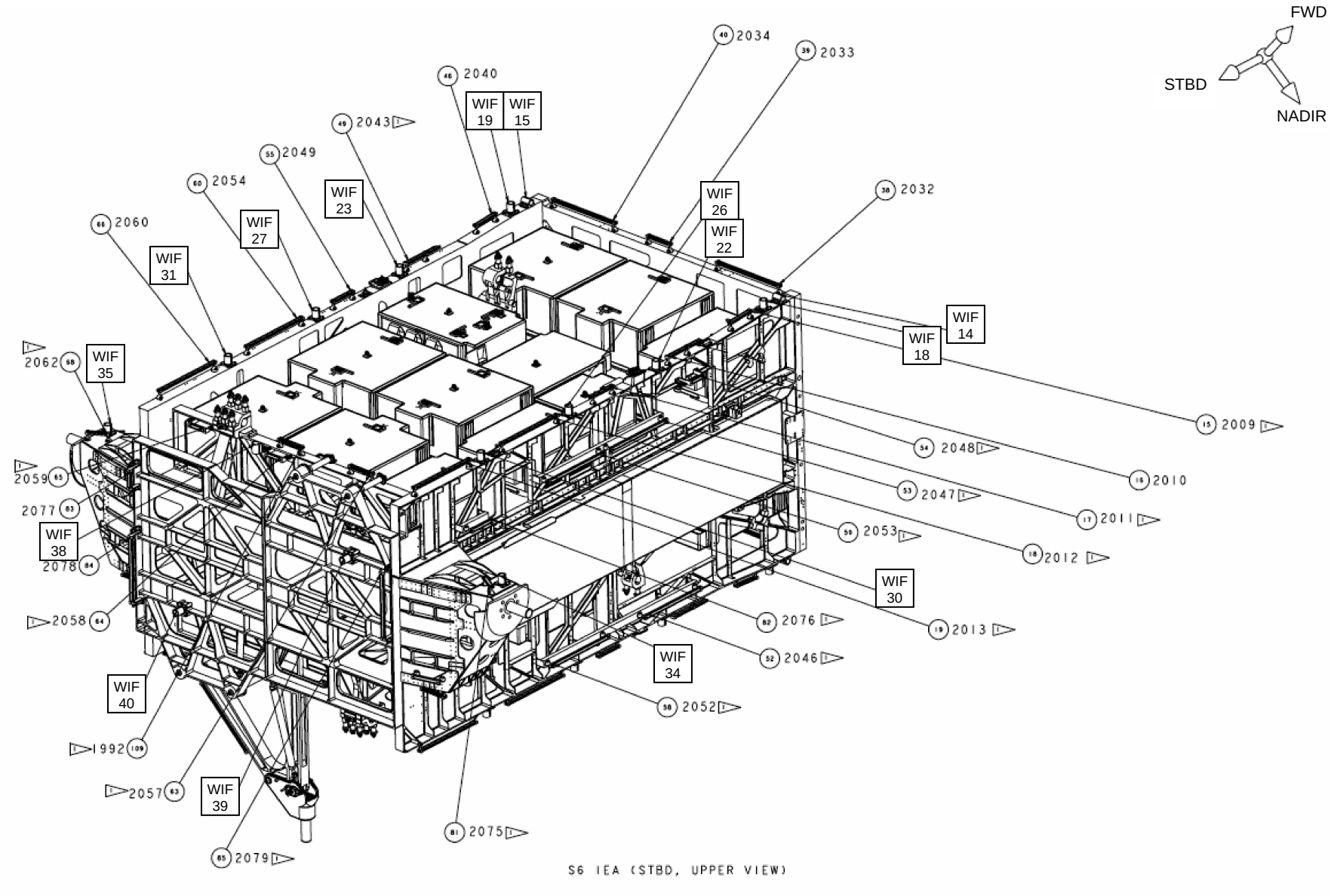

S6 IEA (KEEL SIDE) AND NON-PVR SIDE

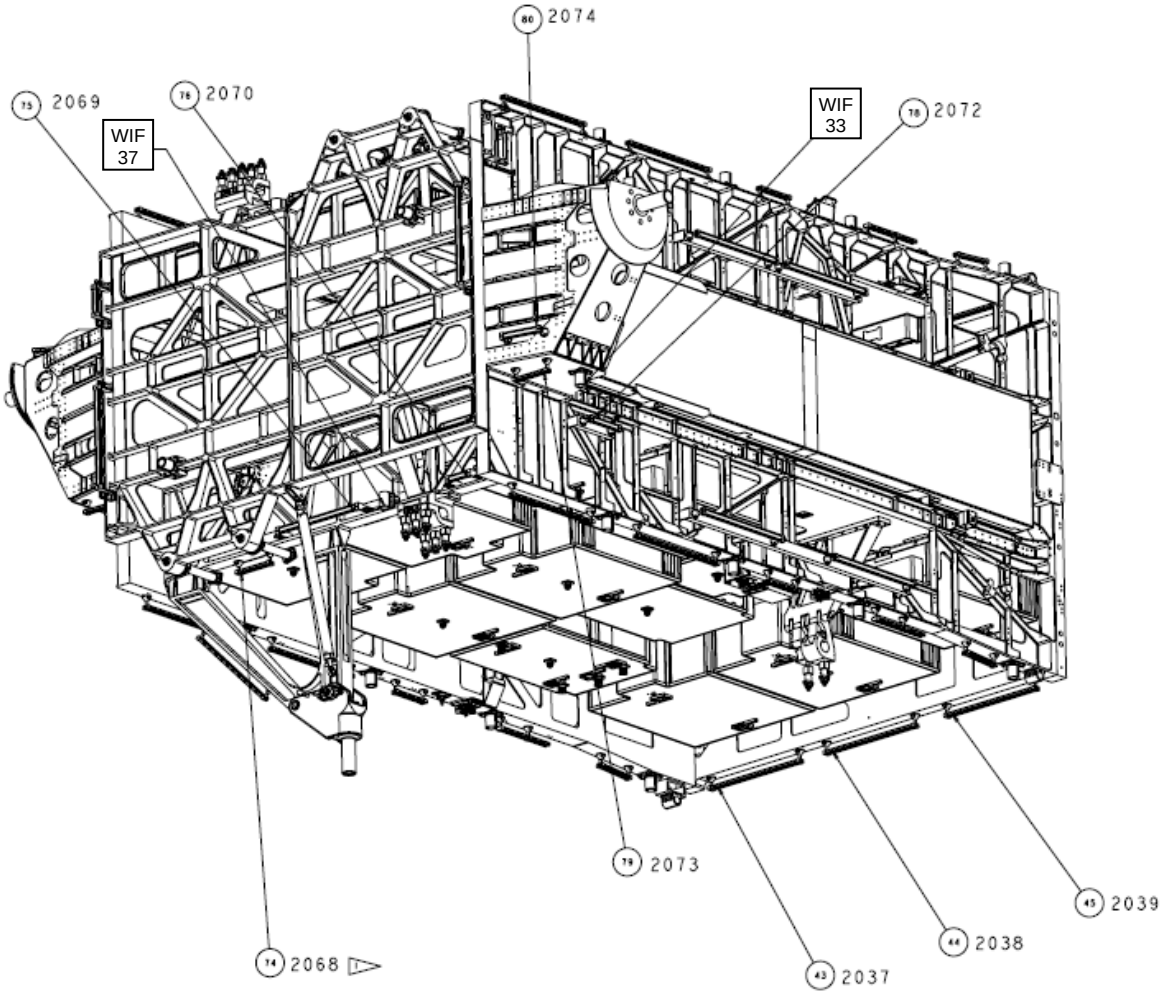

S6 IEA (STBD, LOWER VIEW)

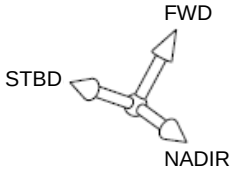

S6 IEA (KEEL SIDE) AND PVR SIDE

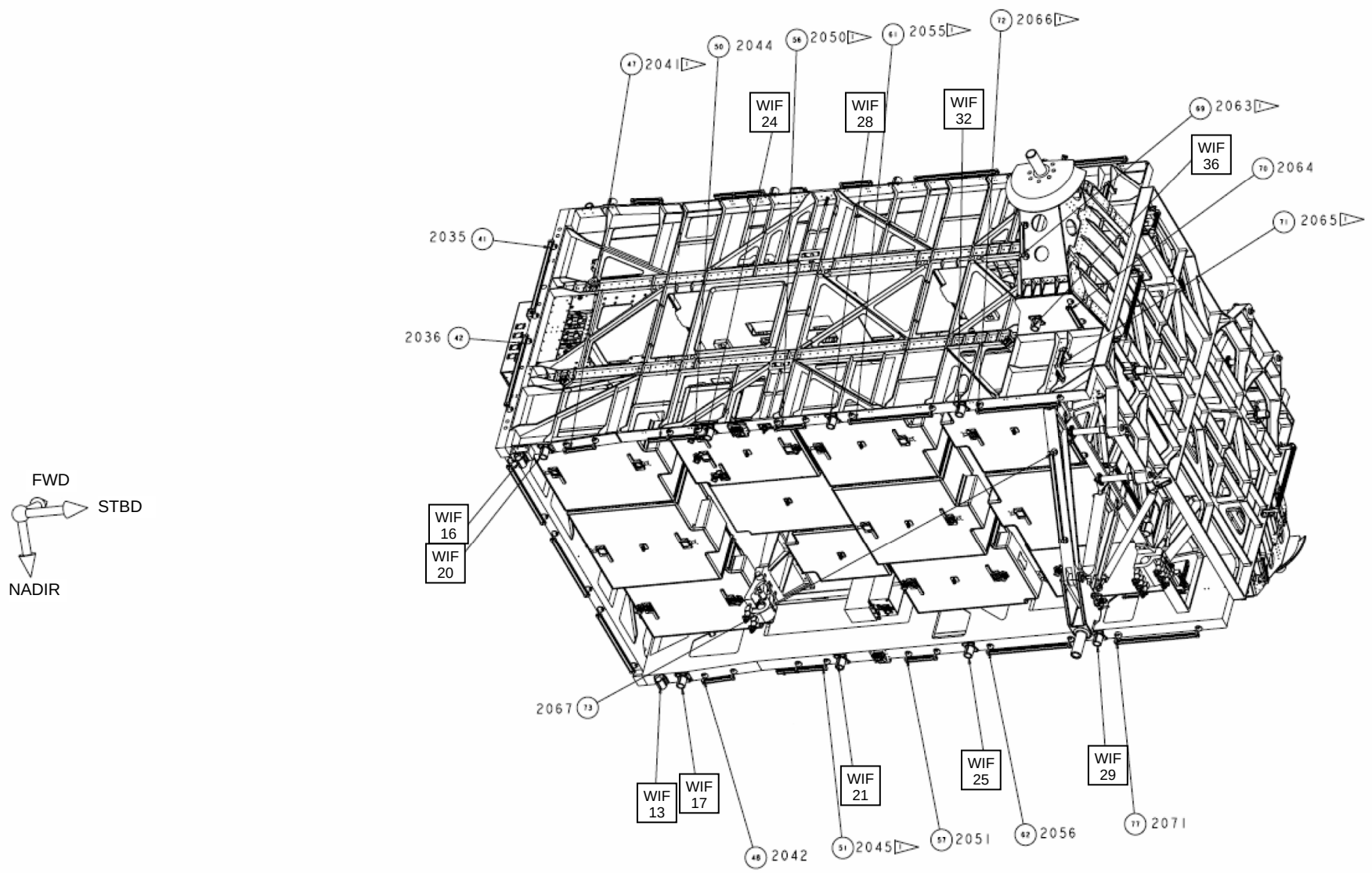

NOTE: PVR removed for clarity

S6 STARBOARD, NON-KEEL UP

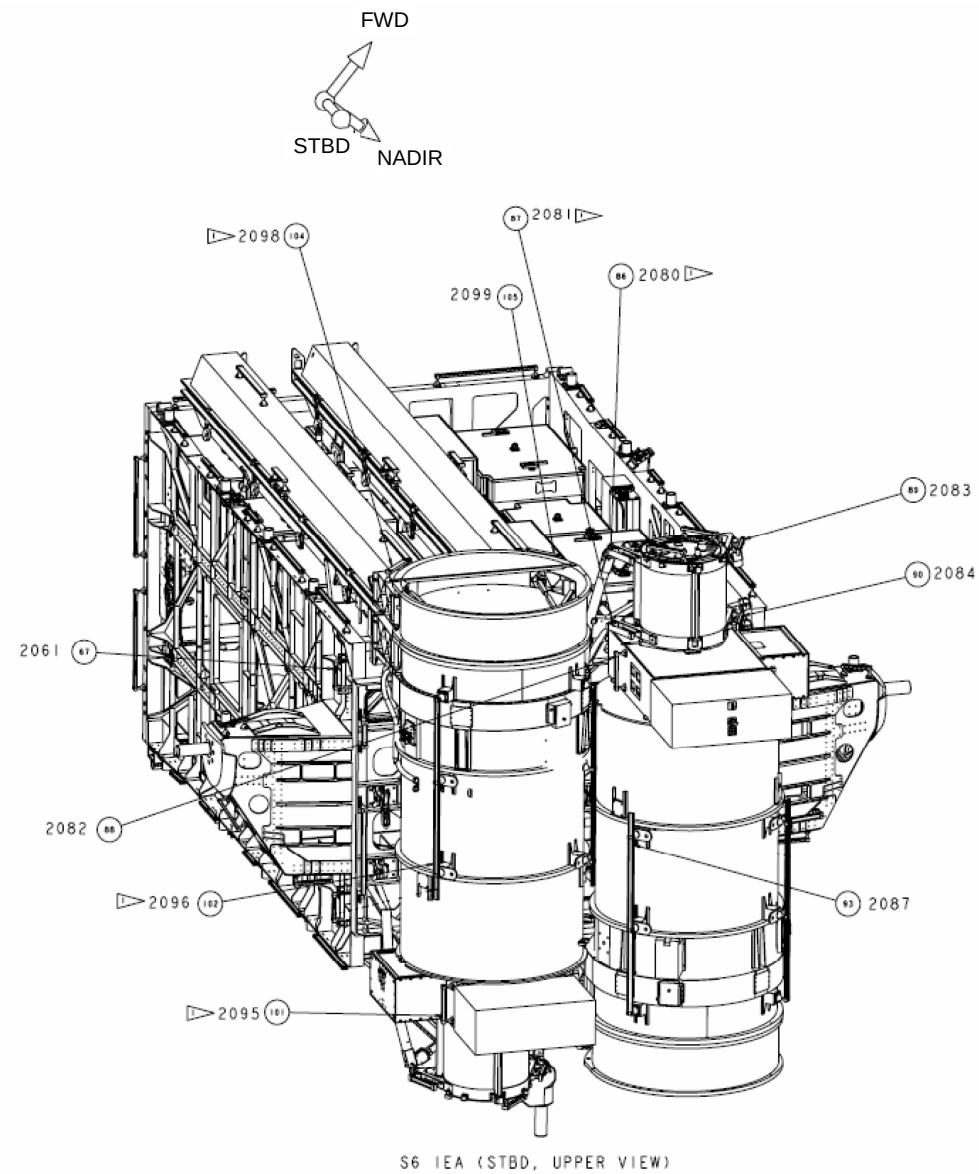

S6 STARBOARD, KEEL UP

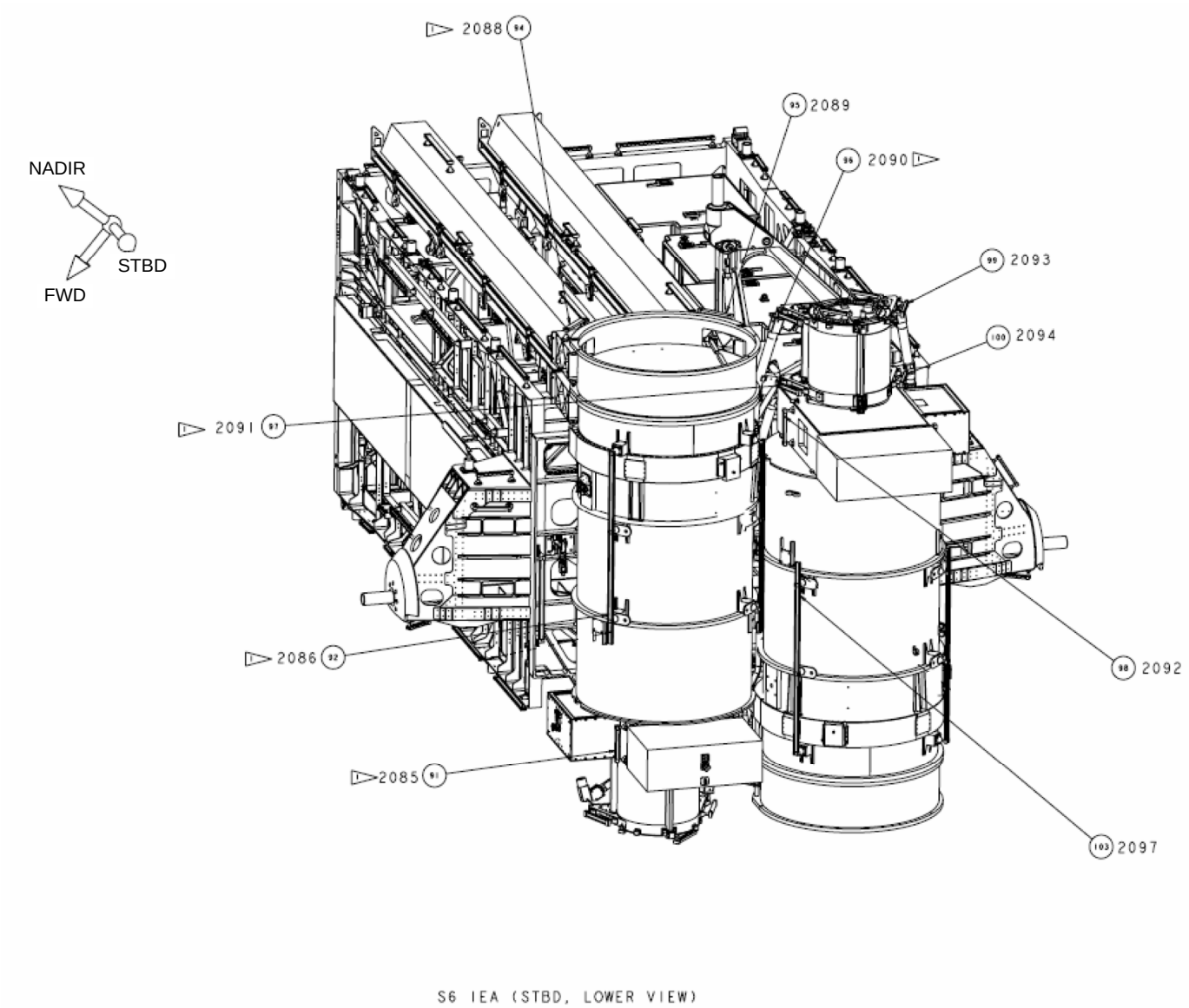

GAP CHECK TOOL

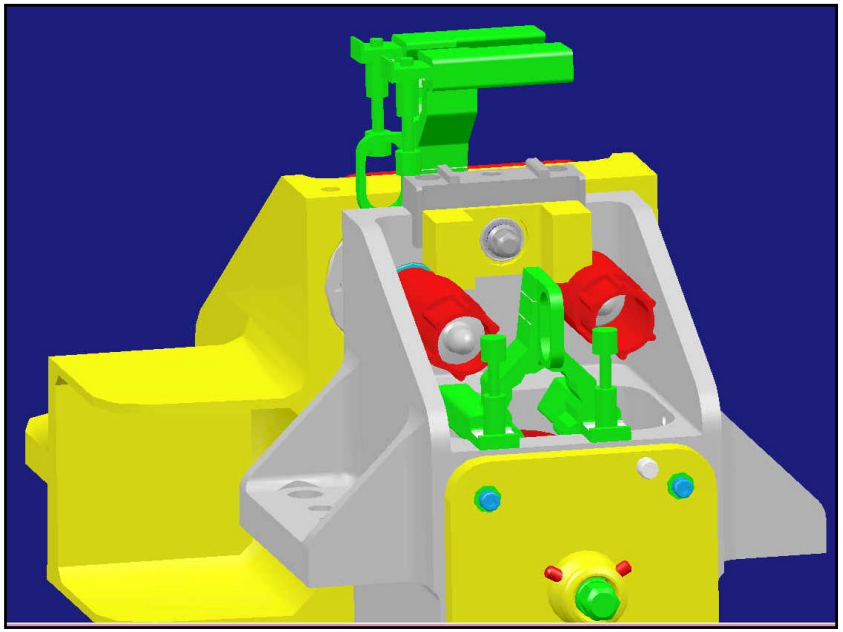

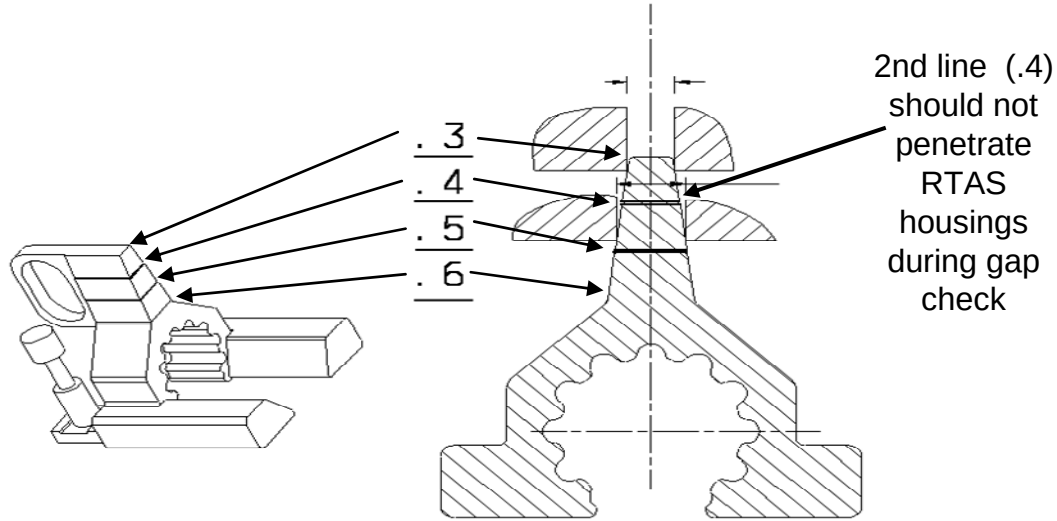

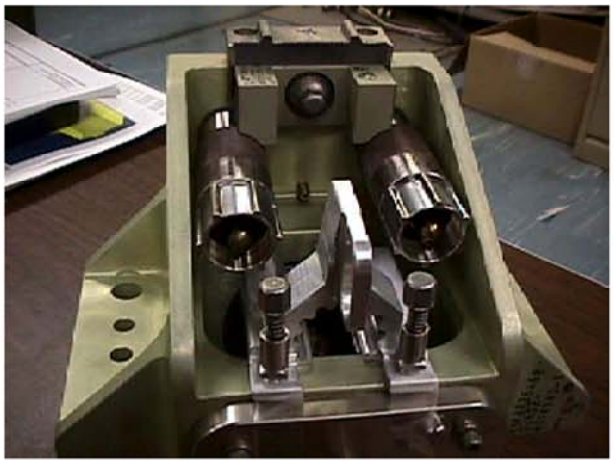

LAUNCH POSITION
(RTAS corner #1)

TOOL REMOVED

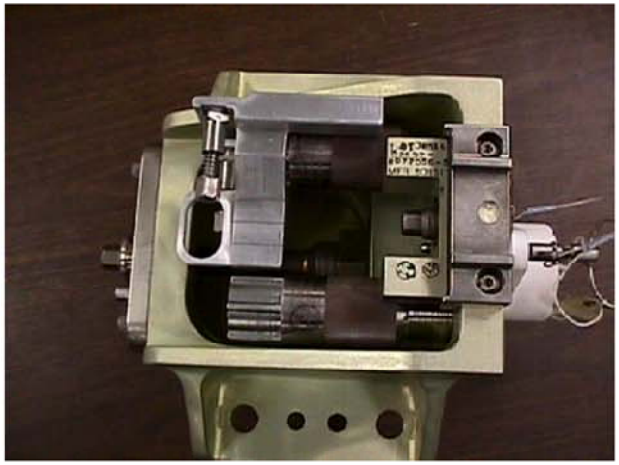

TOOL INSTALLED ON
RTAS CONTINGENCY SPACER SLEEVE

S5 CAPTURE LATCH ASSEMBLY (CLA)

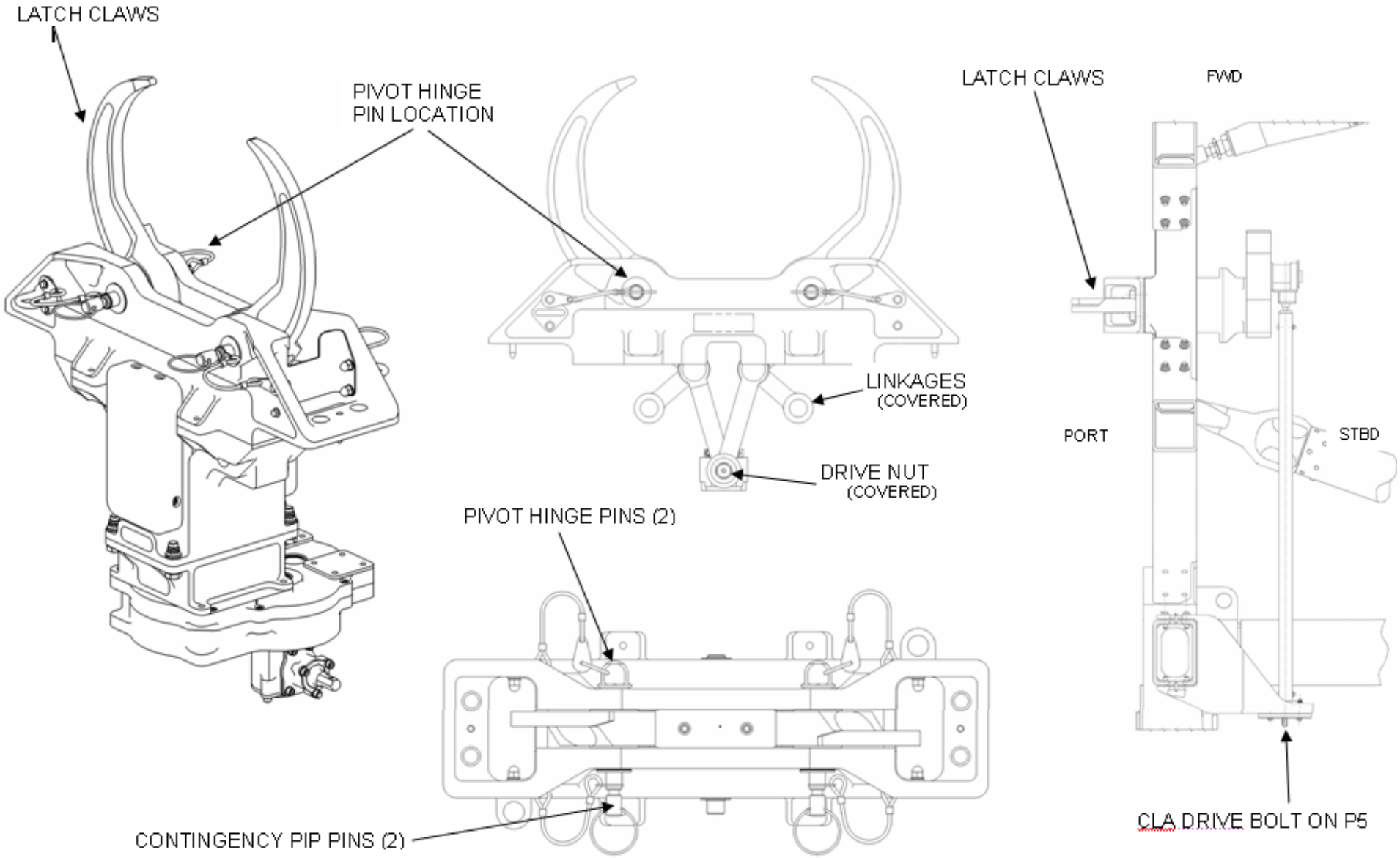

S6 SSU SHROUD MLI FOLDING SEQUENCE

1. Remove shroud

2. Fold in sewn short side

3. Fold in long sides

3. Fold in long sides

4. Fold shroud in half

5. Stow short straps inside bundle
6. Secure Velcro

SAW

BGA PRIMARY POWER CABLE CLAMPS

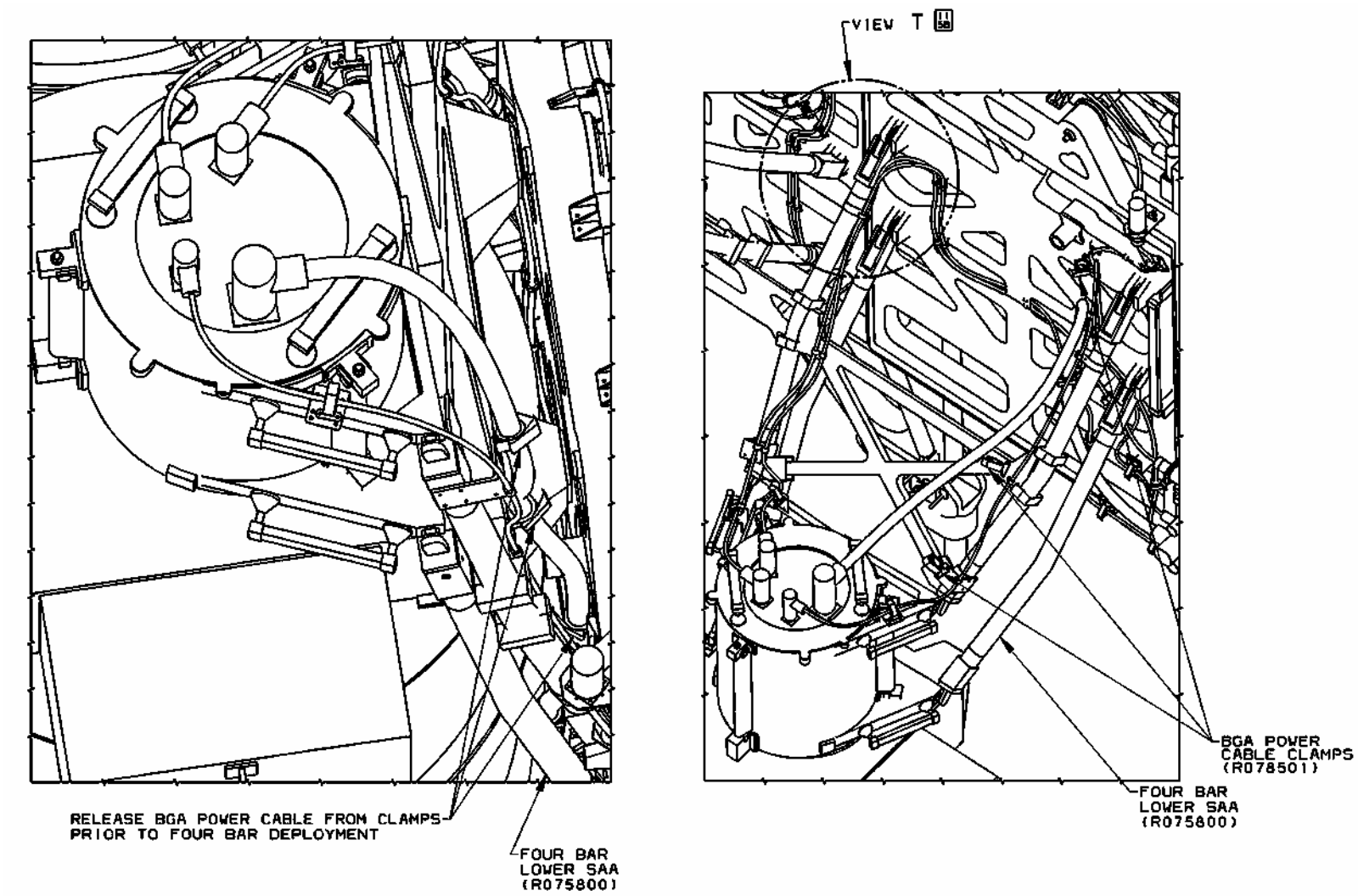

RELEASE BETA GIMBAL LAUNCH RESTRAINTS

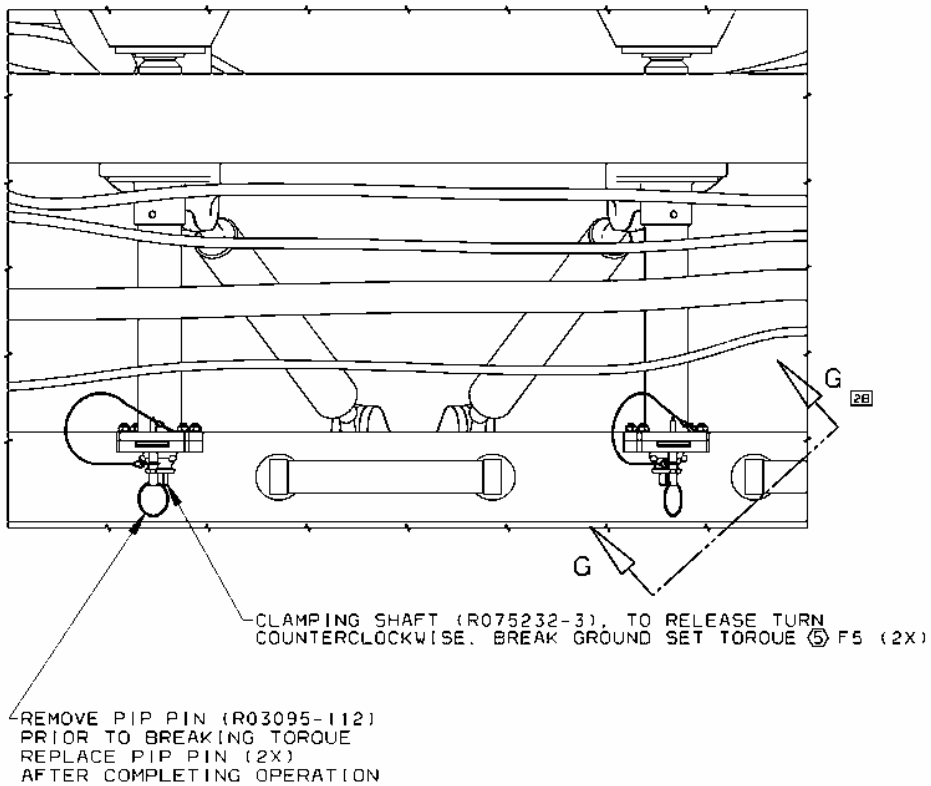

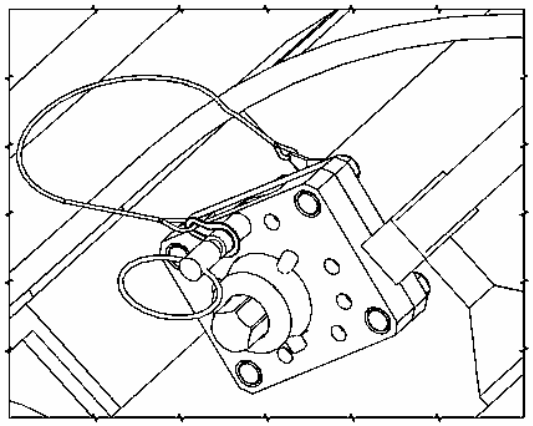

LAUNCH

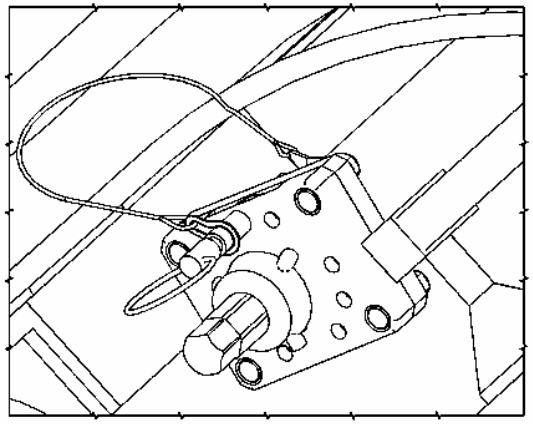

DEPLOYED

View G

FOUR BAR IN LOCKED POSITION

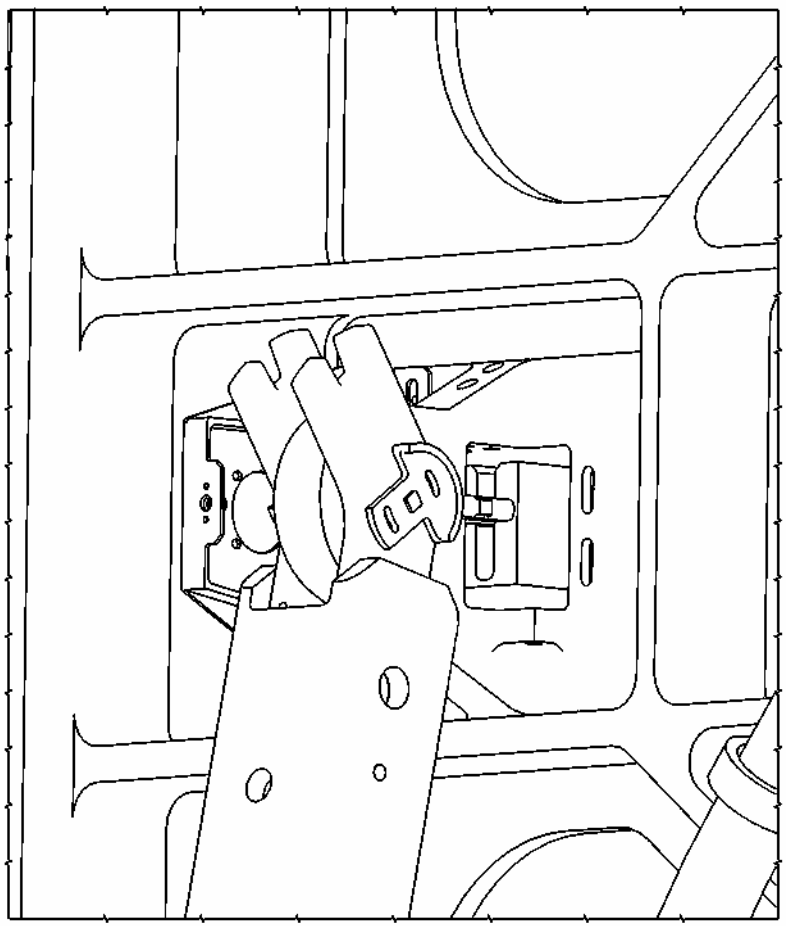

LAUNCH

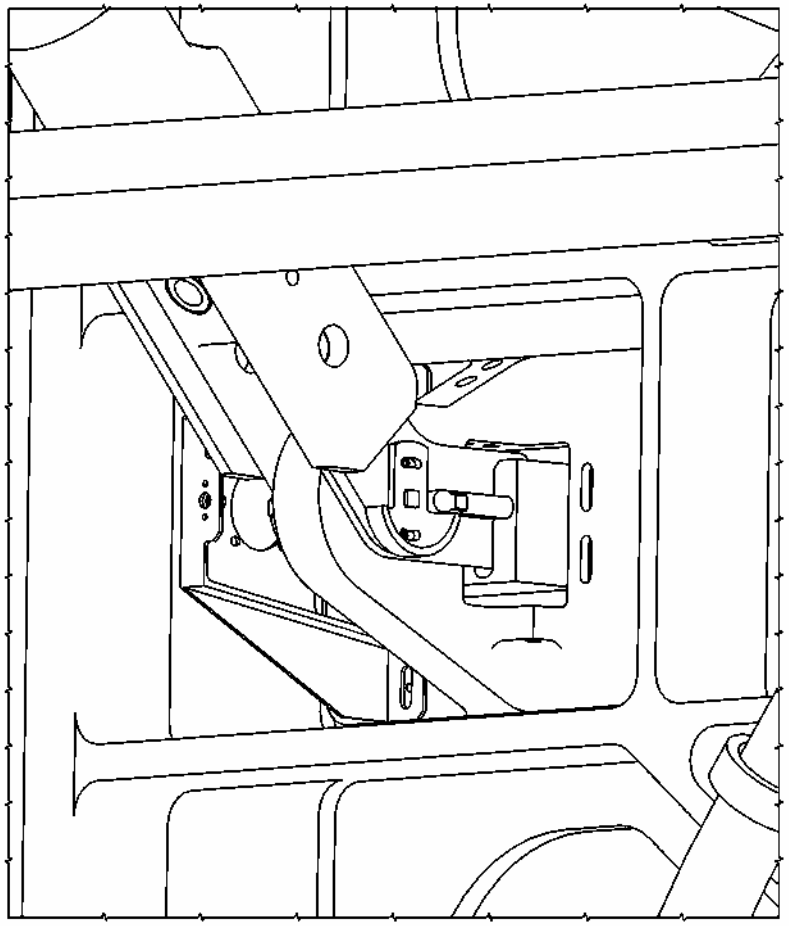

DEPLOYED

View T

SABB UNSTOW

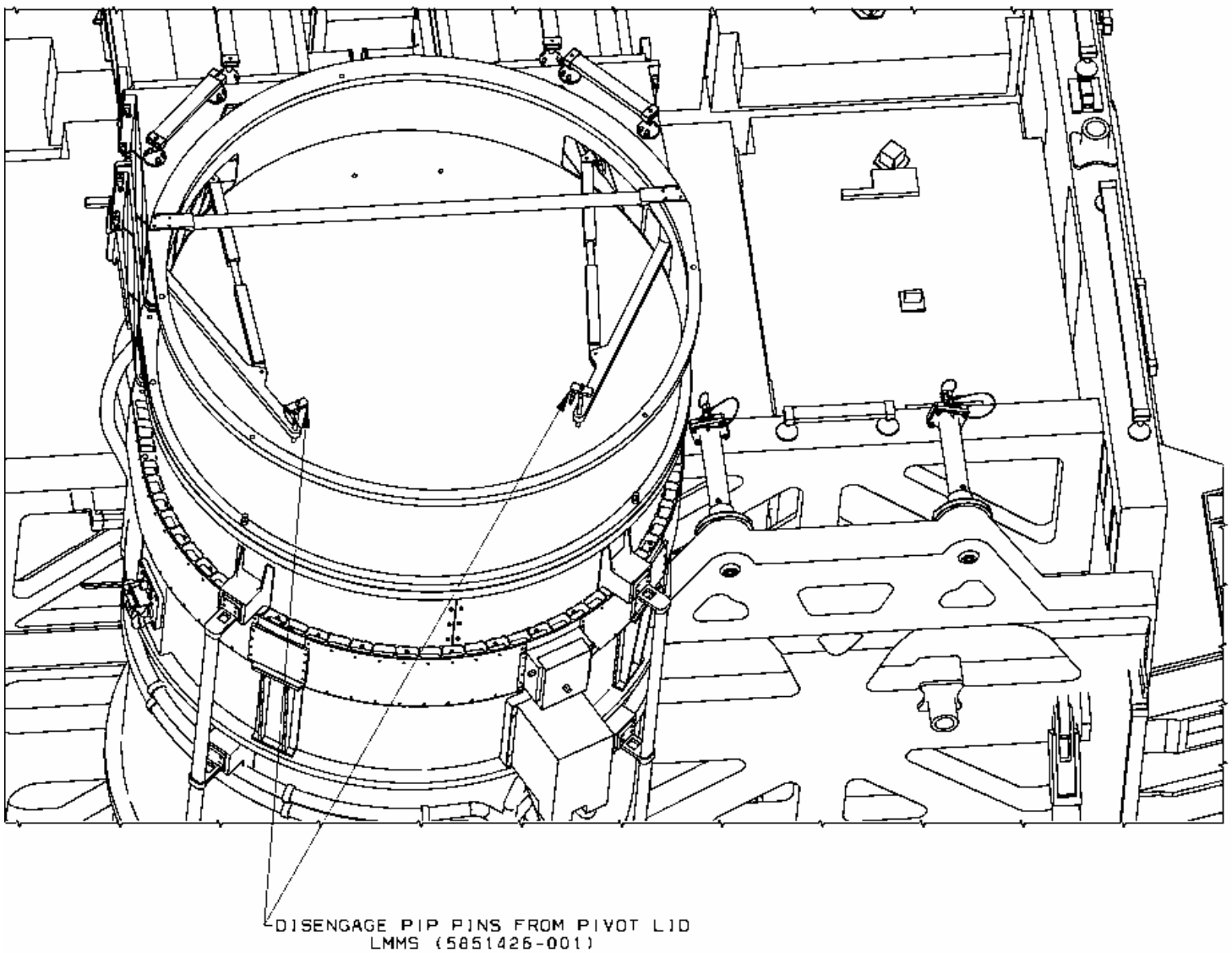

SABB shown in stowed configuration

SABB UNSTOW (Cont)

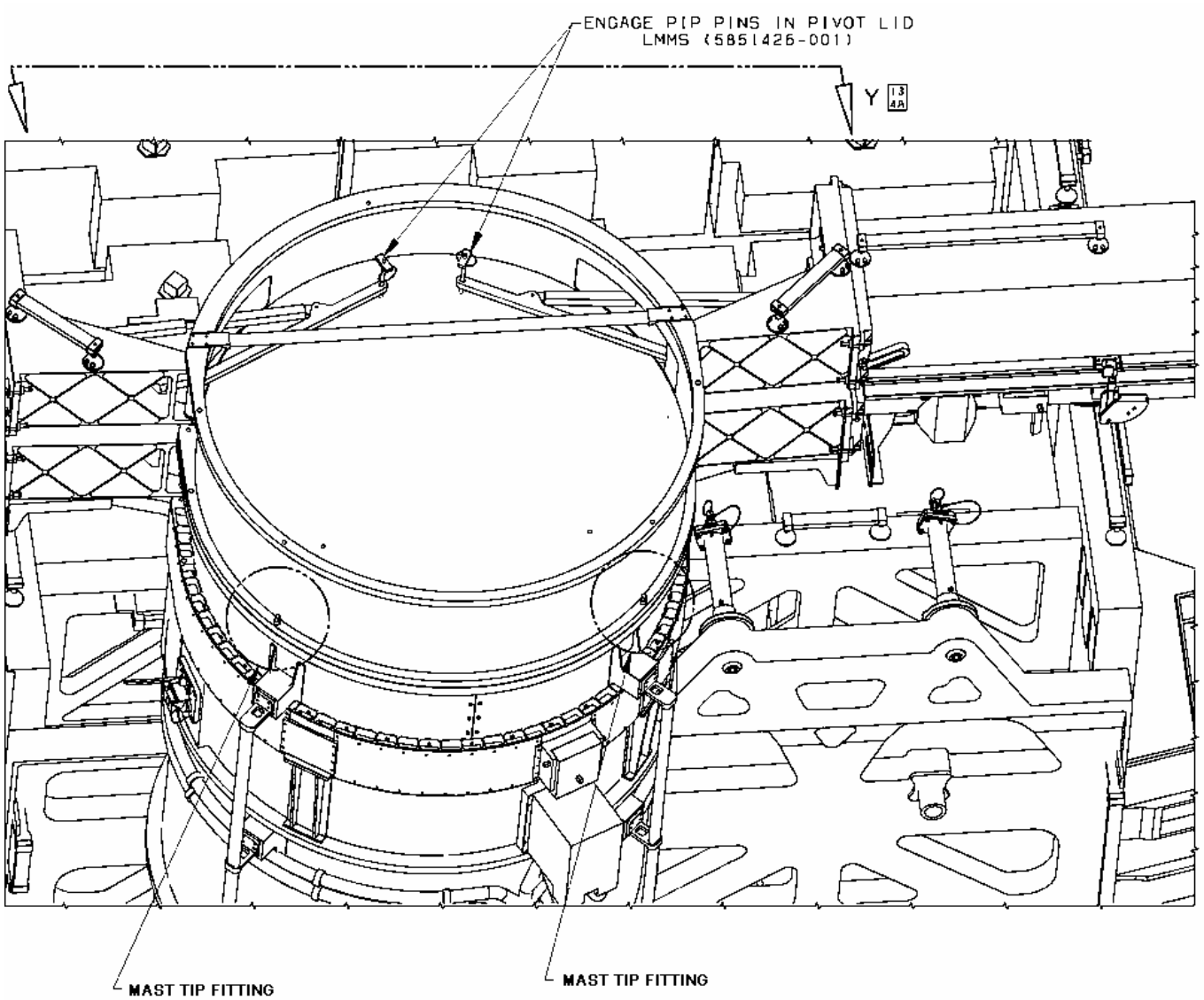

SABB shown in deployed configuration

SABB UNSTOW (Cont)

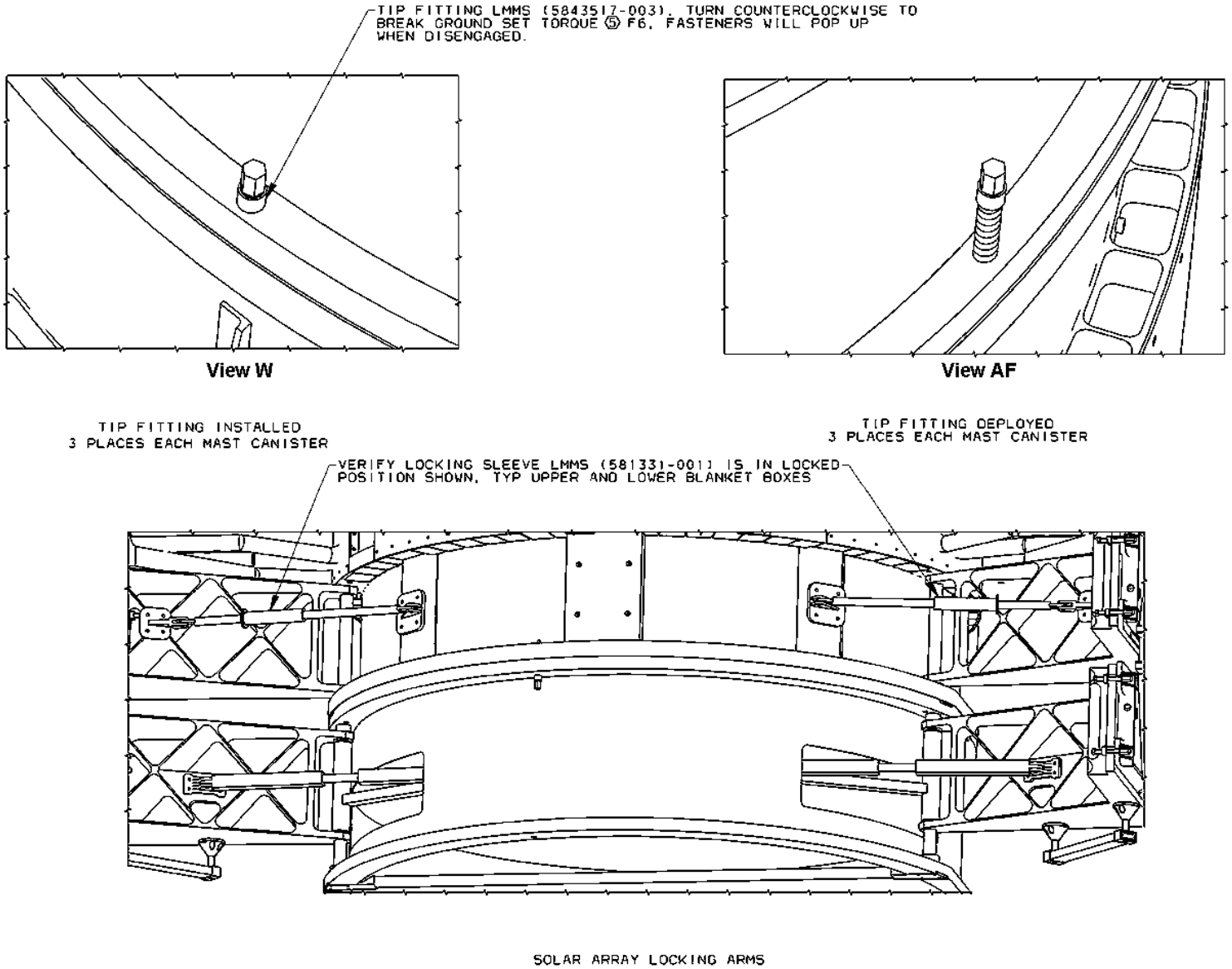

4-BAR STOWED AND DEPLOYED CONFIGURATIONS

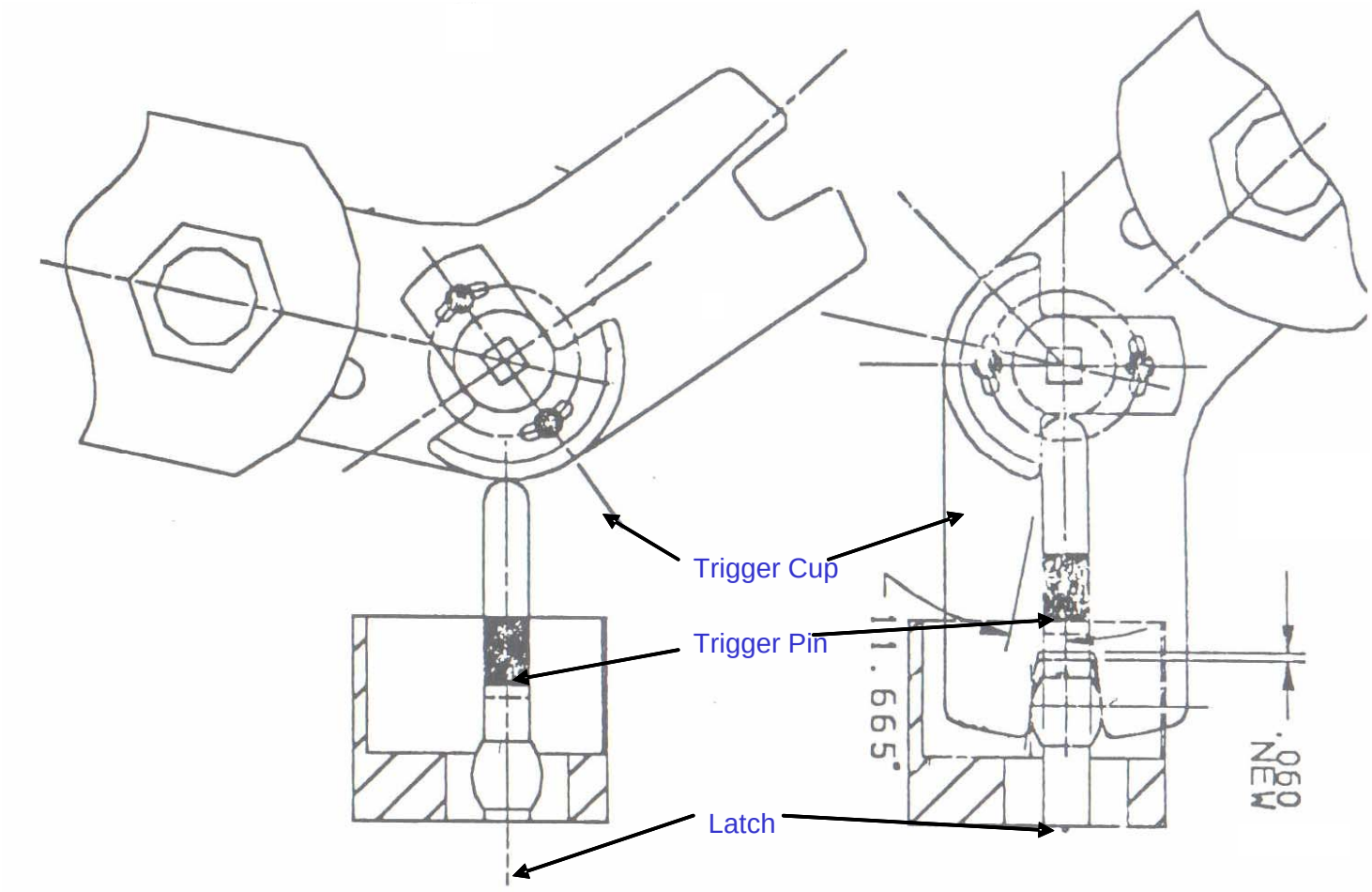

Stowed
(Launch Configuration)

Deployed
(On-Orbit Configuration)

MAST CANISTER MDA

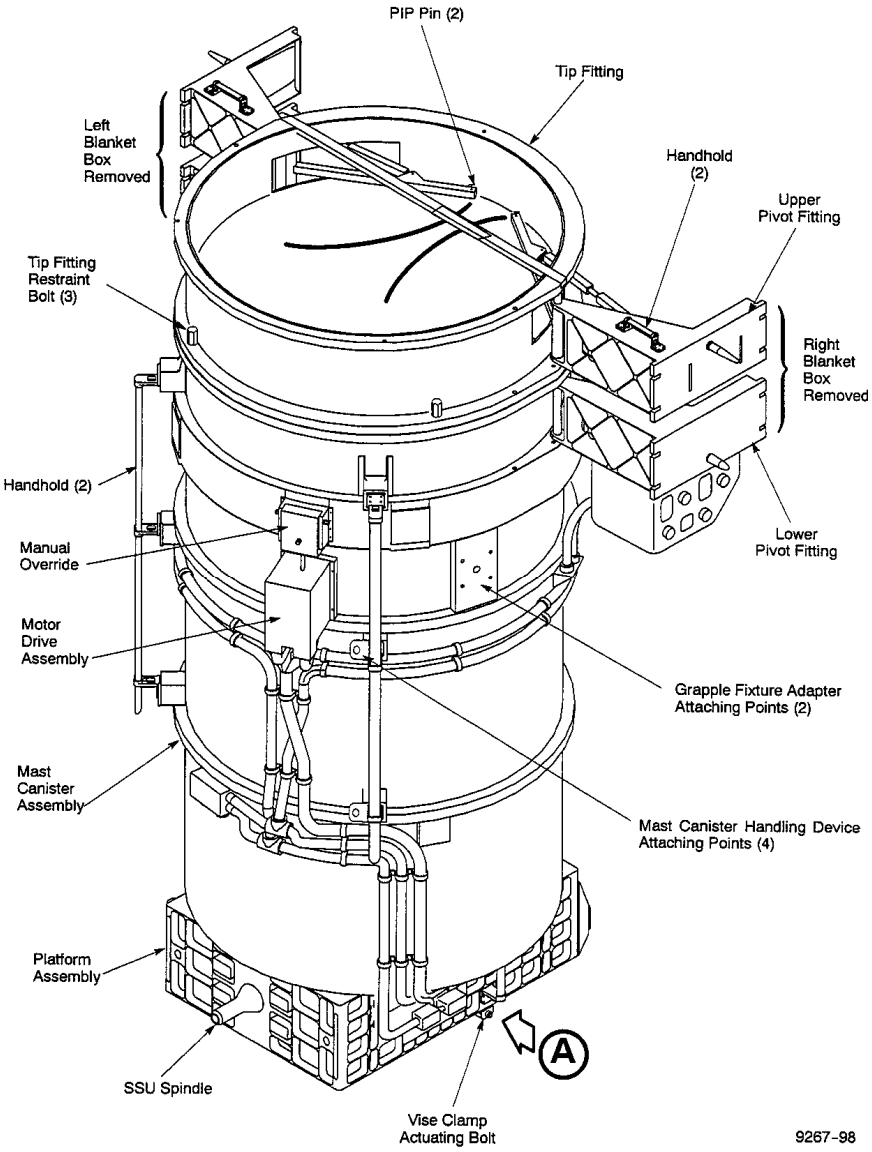

CETA CART – TOP VIEW

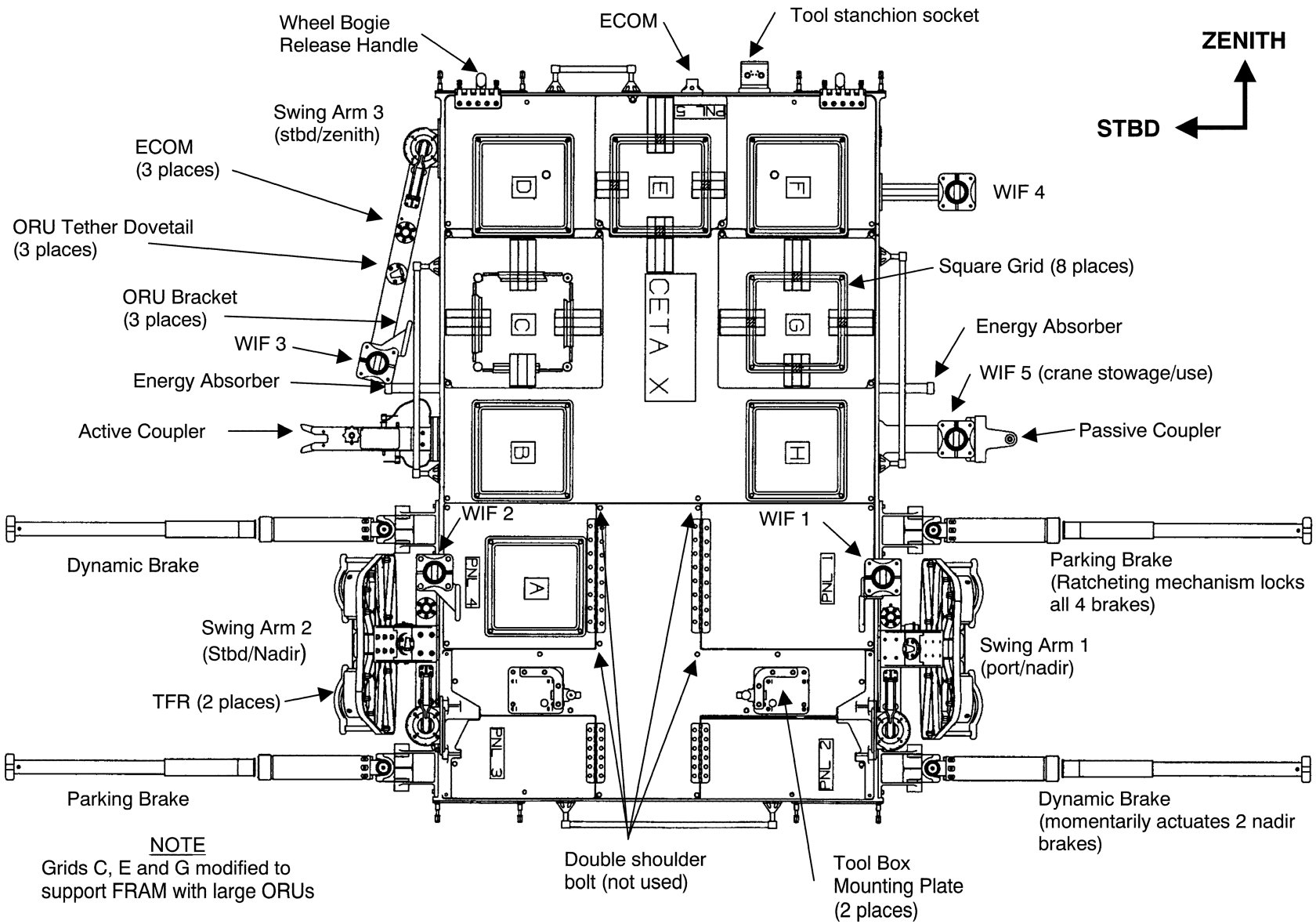

CETA CART – SWING ARMS AND WIF MARKINGS

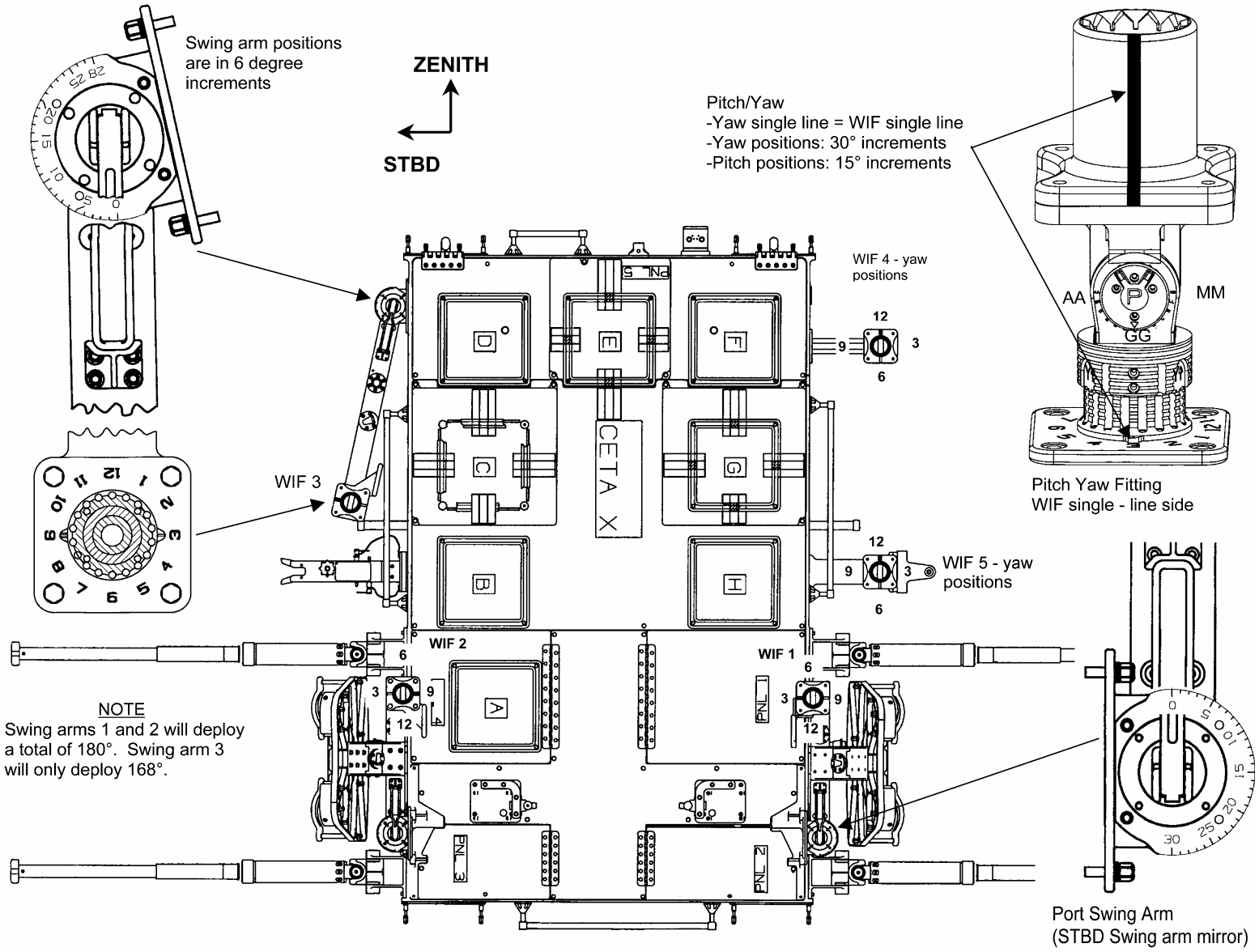

CETA CART – COUPLERS

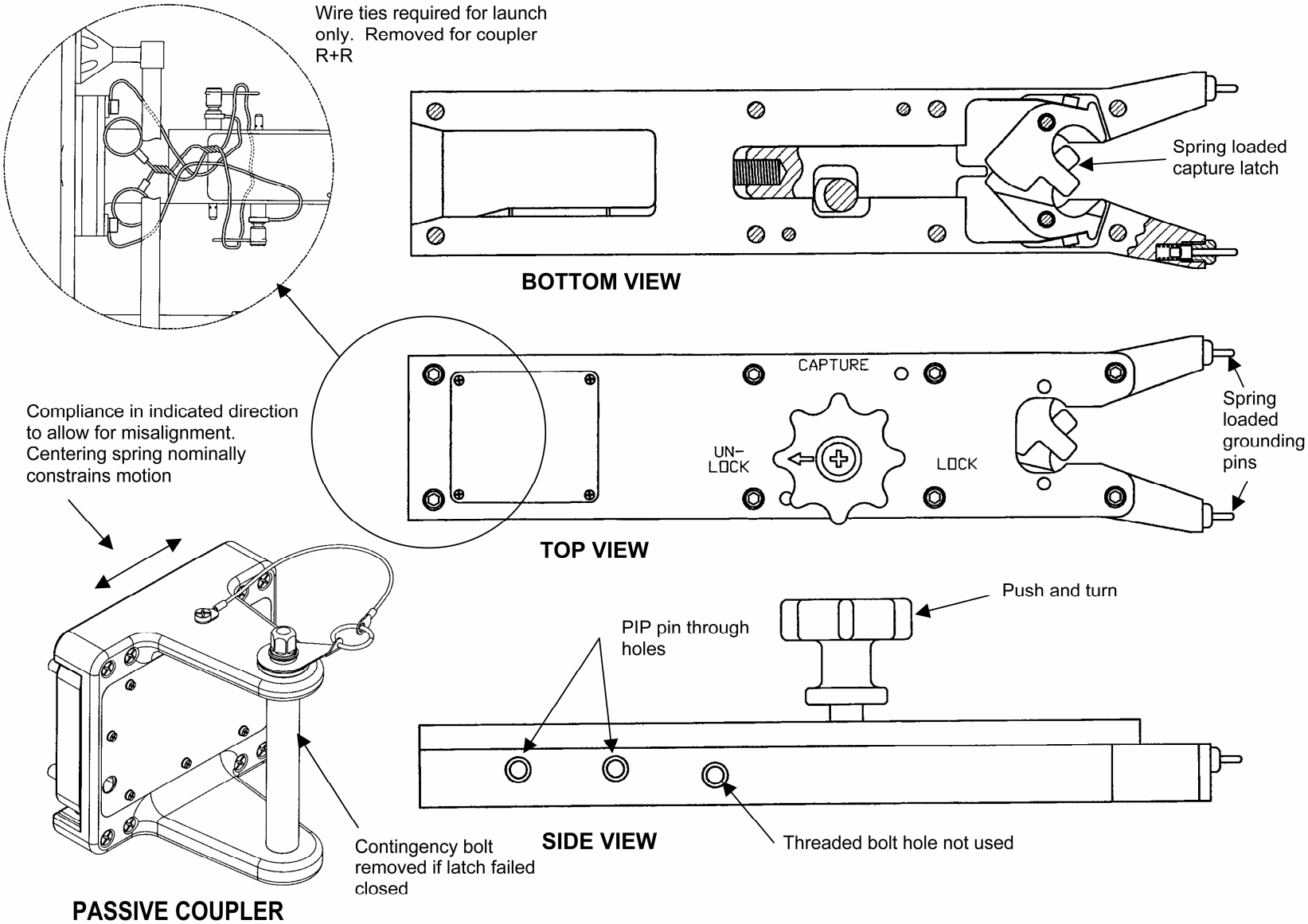

CETA CART – WHEEL BOGIES

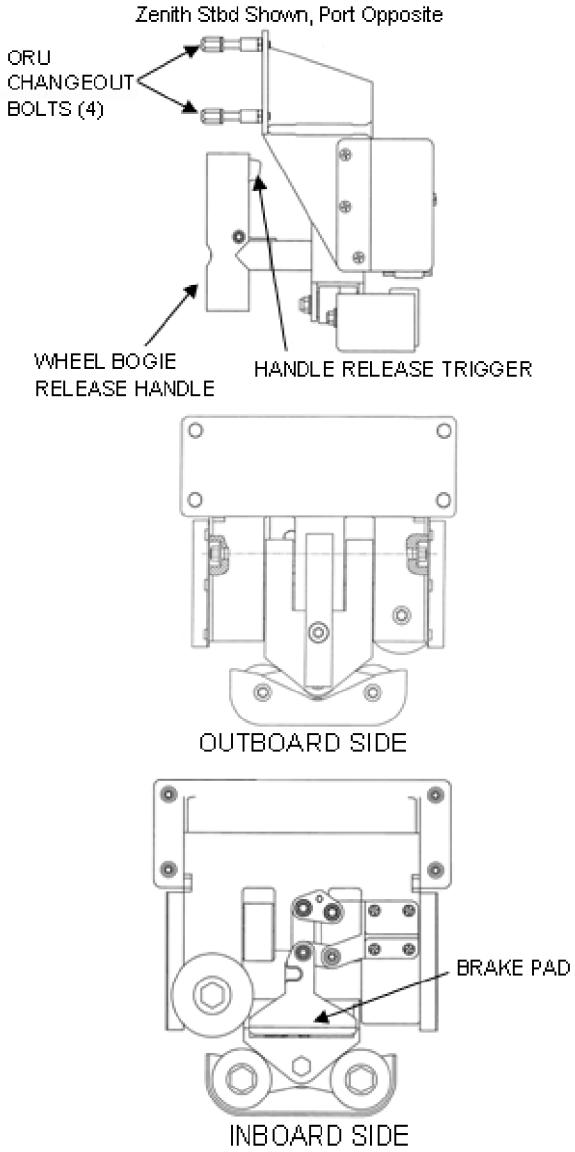

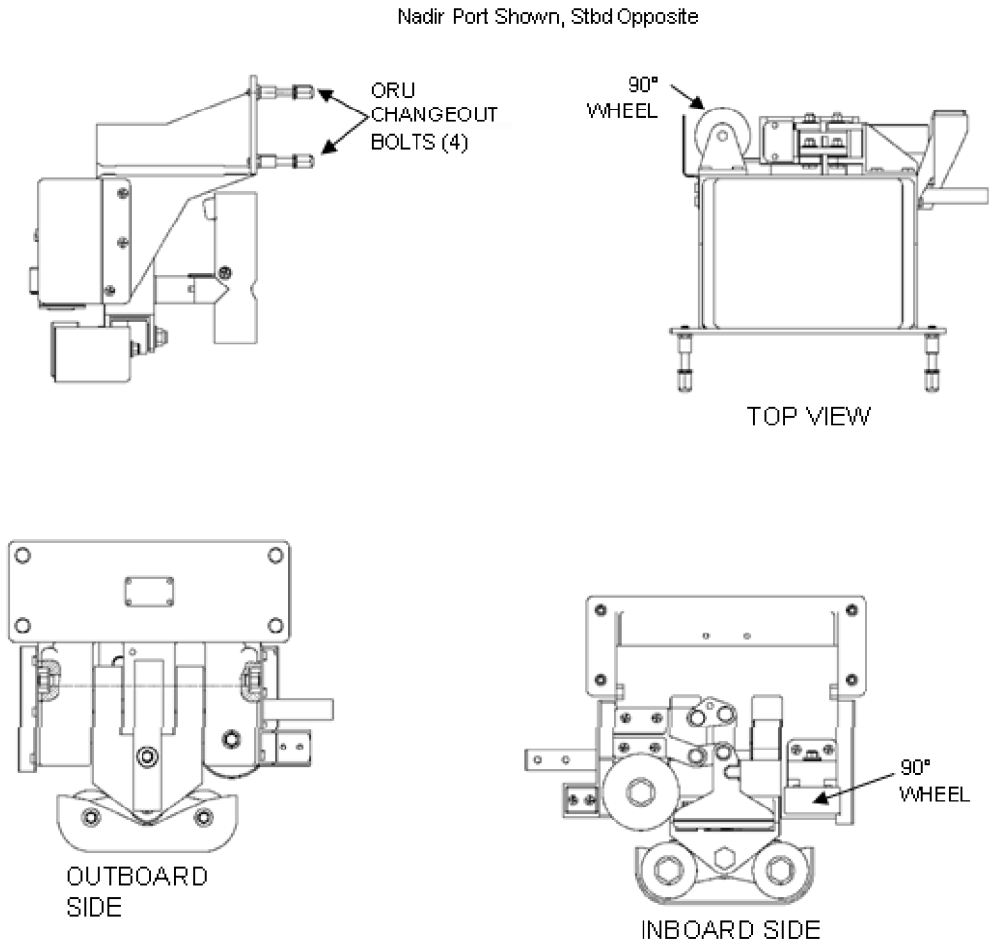

SPDM ASSY

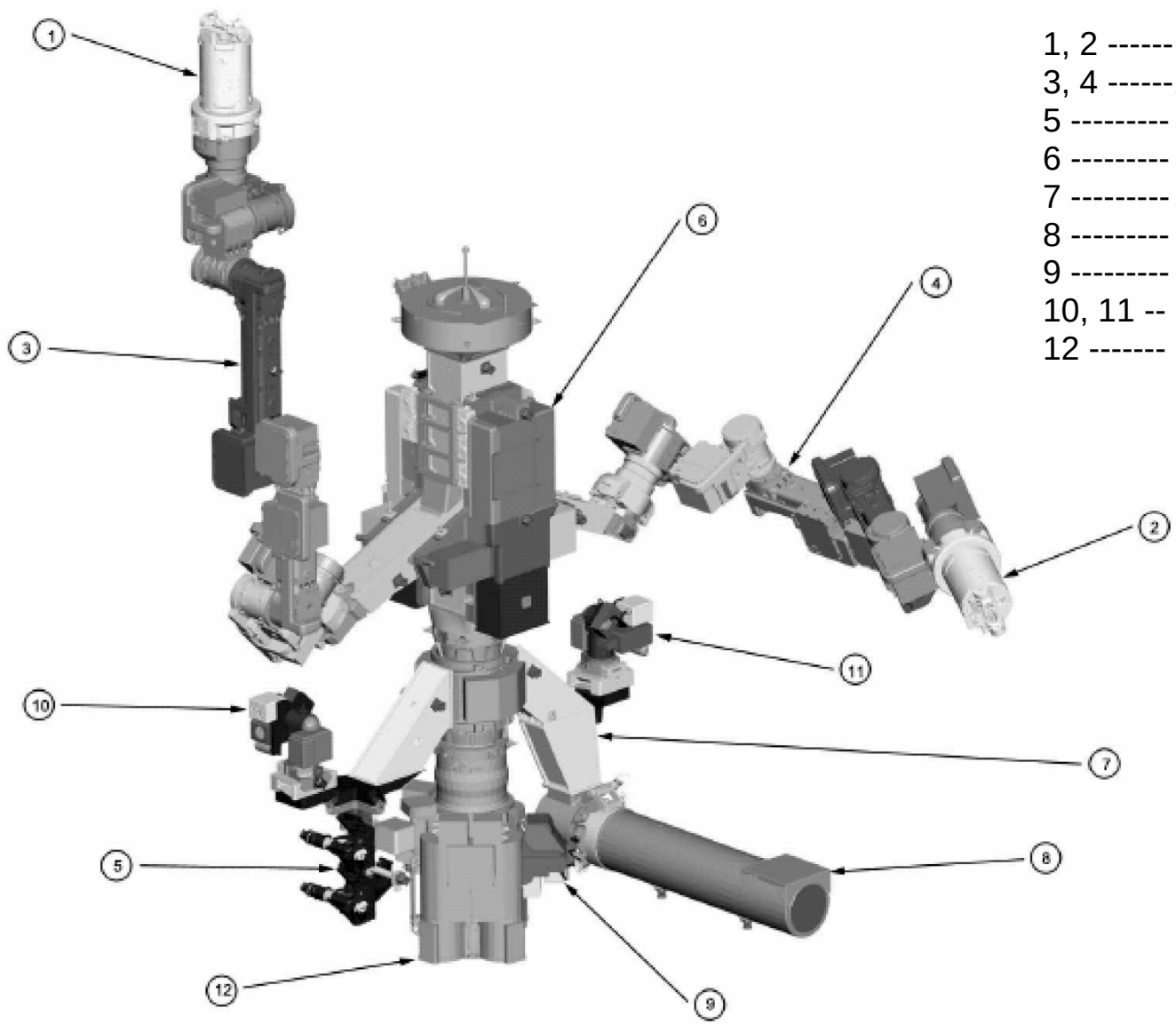

1, 2 ------OTCM
3, 4 ------Arm Assy
5 --------- THA
6 --------- EP
7 --------- Body Joint Assy
8 --------- OTP
9 --------- CLA
10, 11 -- CLPA
12 ------- LEE

SPDM CAMERA LIGHT ASSY (CLA)

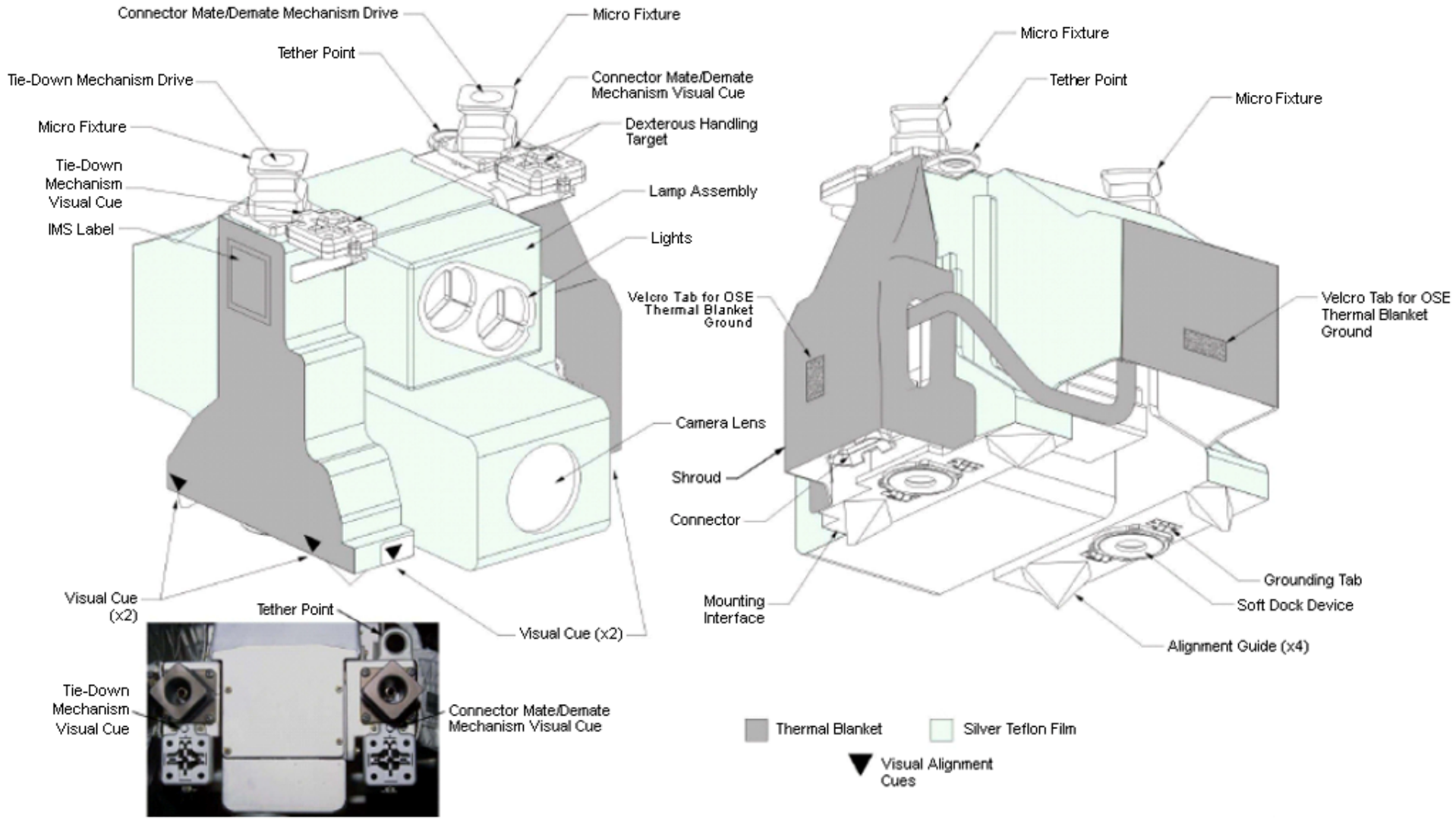

SPDM CAMERA LIGHT ASSY (CLA) (Cont)

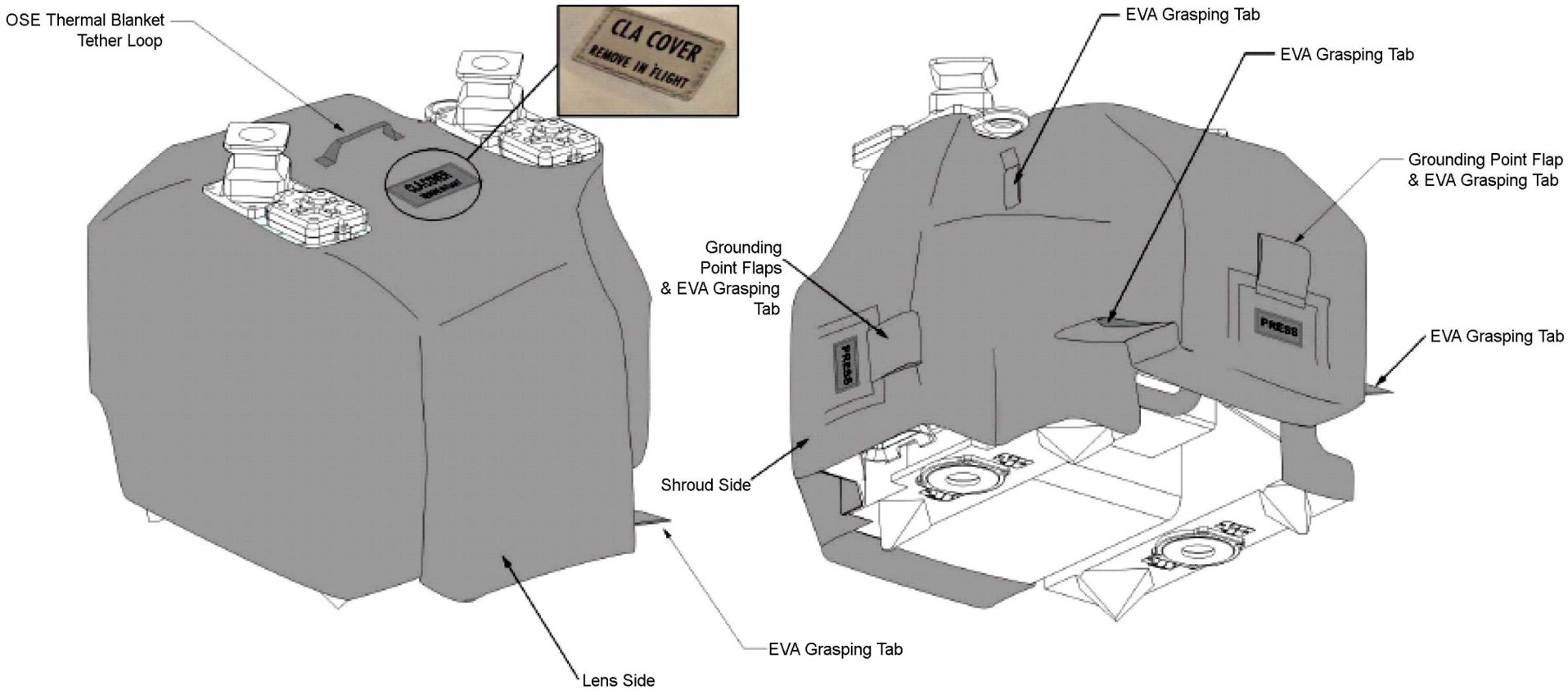

SPDM CAMERA LIGHT PAN TILT ASSY (CLPA)

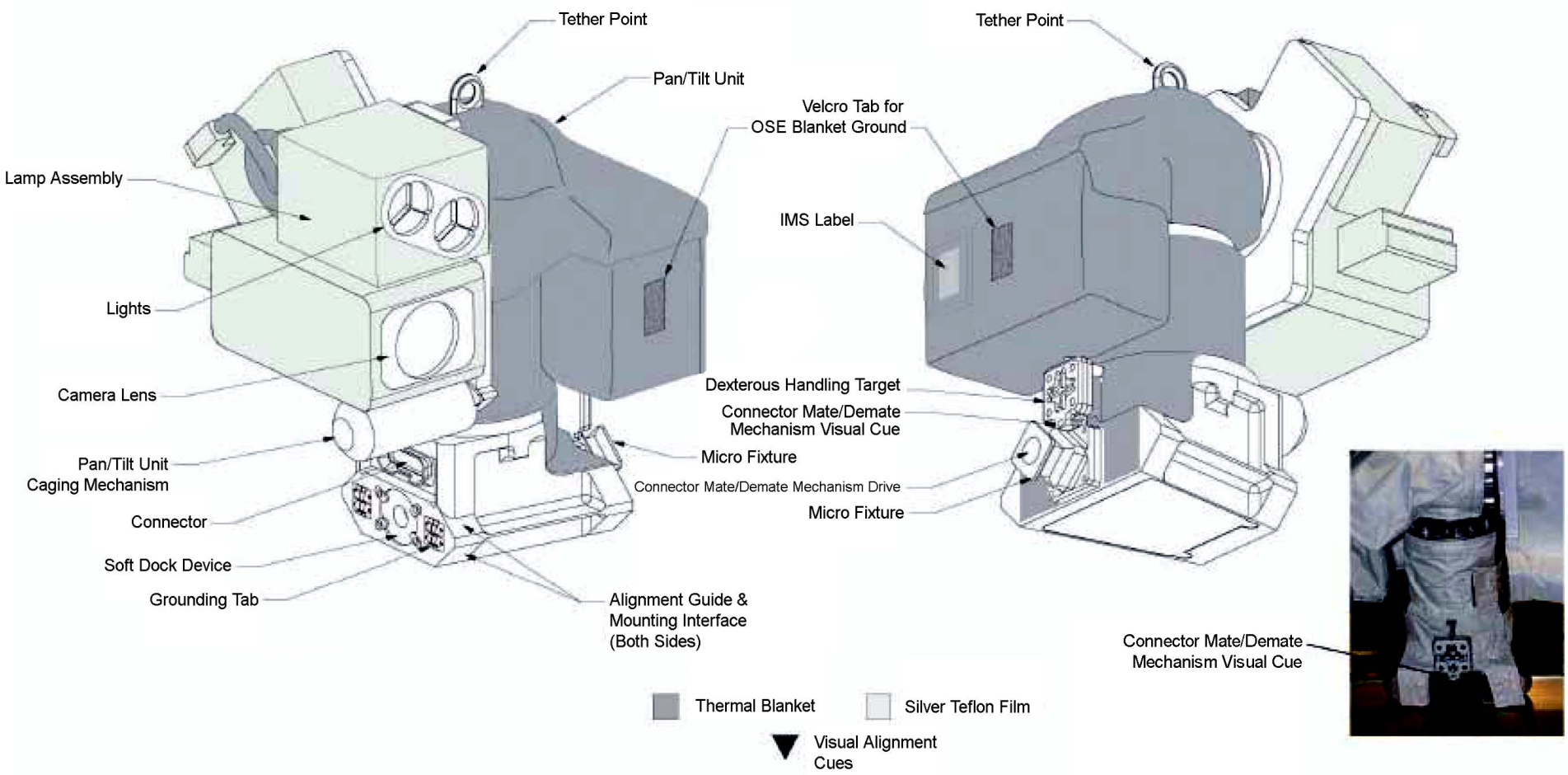

SPDM CAMERA LIGHT PAN TILT ASSY (CLPA) (Cont)

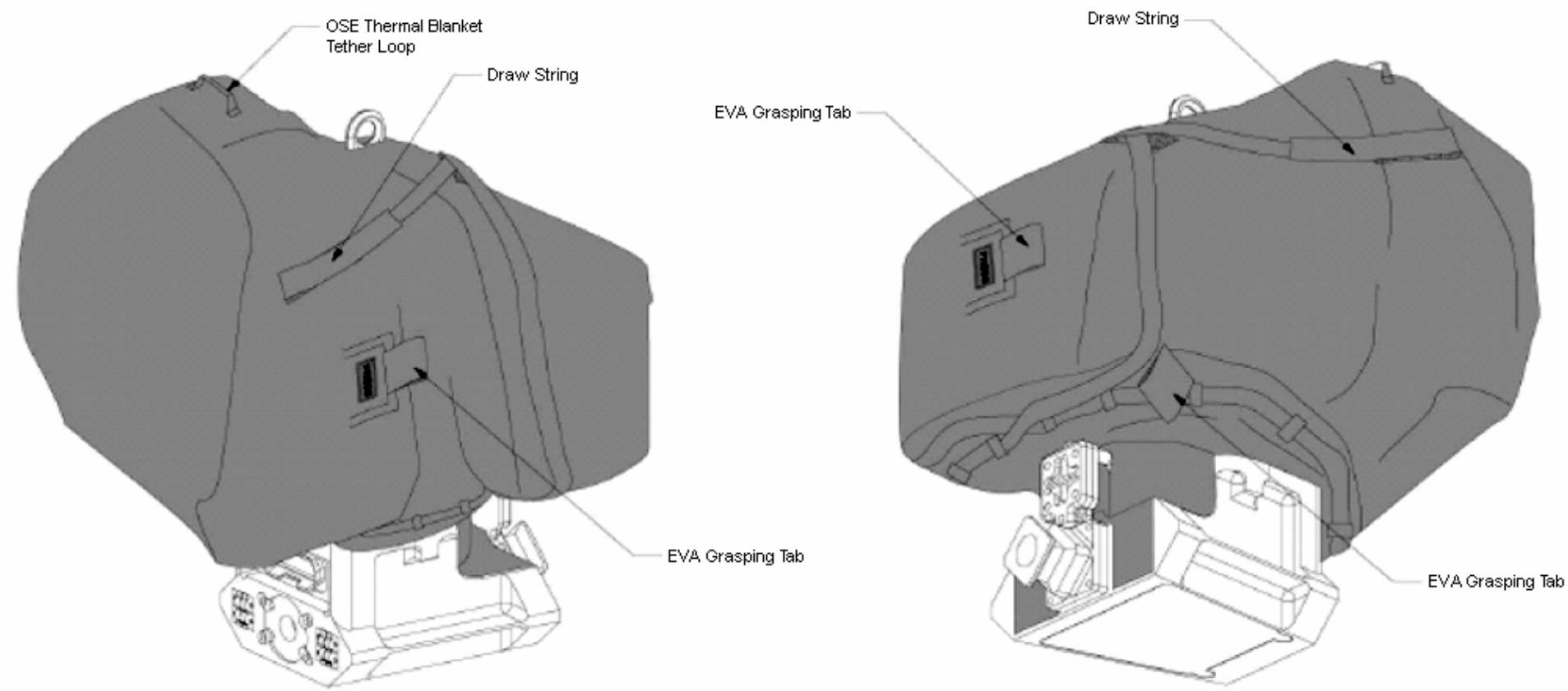

SPDM ORU TOOL CHANGEOUT MECHANISM (OTCM)

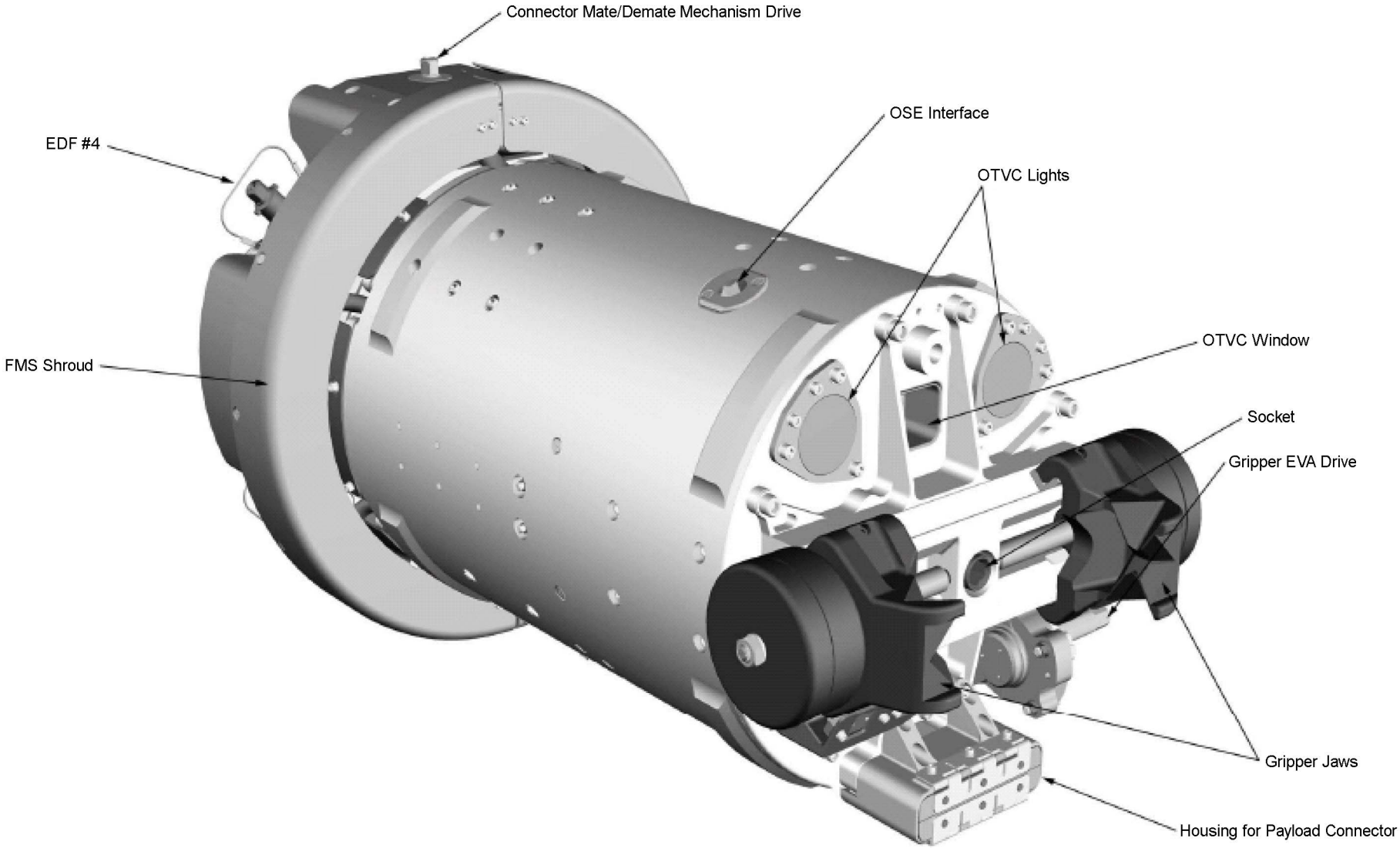

ORU TOOL CHANGEOUT MECHANISM (OTCM) (Cont)

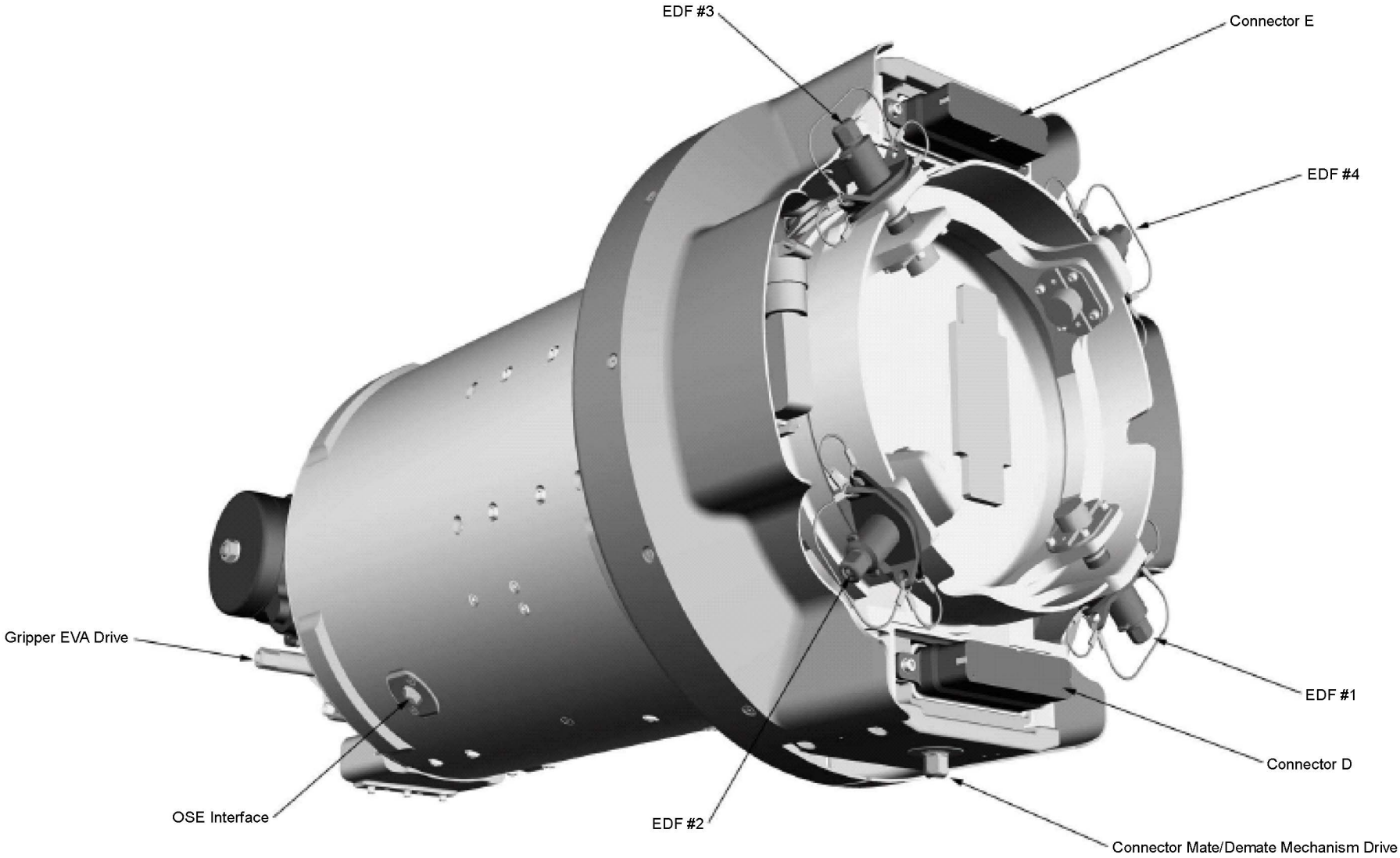

SPDM ELECTRONICS PLATFORM (EP) #1

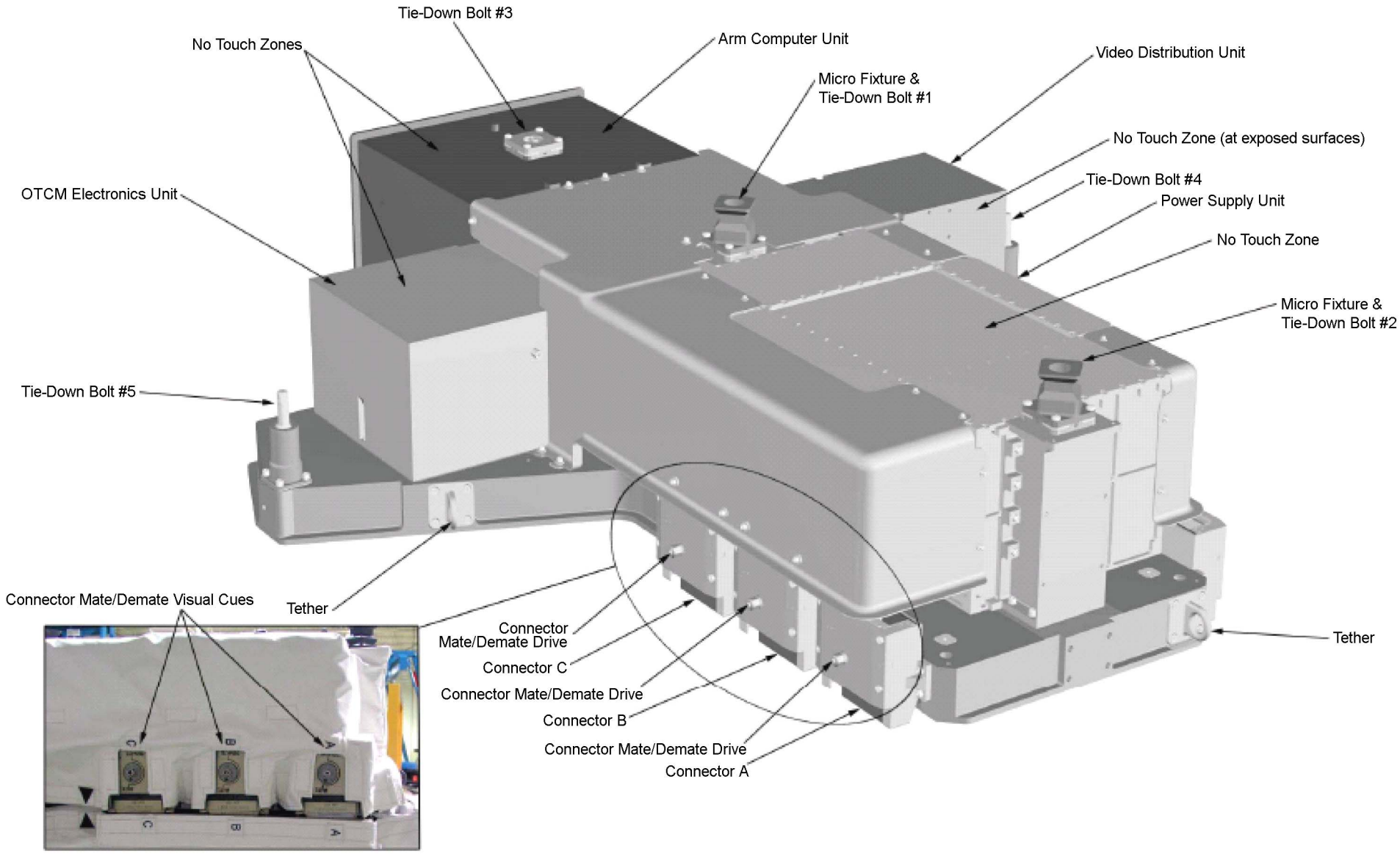

SPDM ELECTRONICS PLATFORM (EP) #1 (Cont)

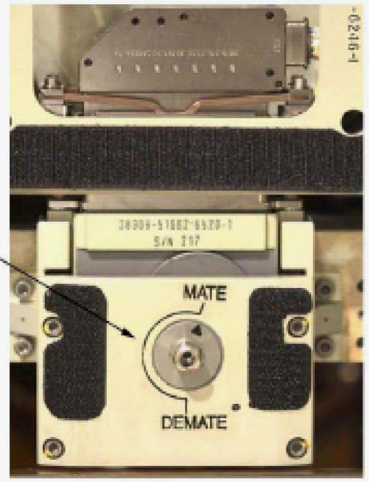

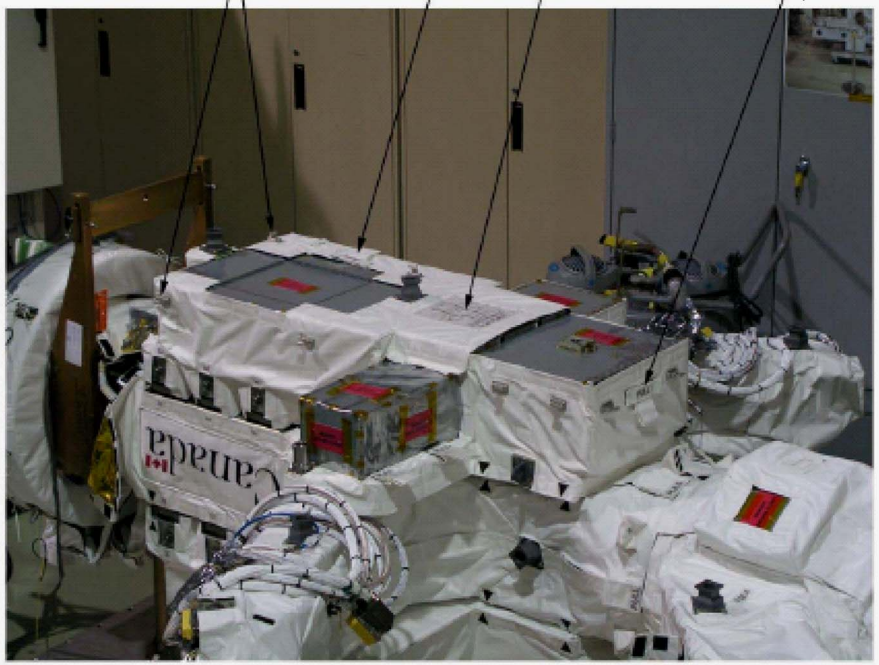

EP #1 installed on Upper Body Structure

NOTE: Temporary radiator surface protection will be removed before launch

SPDM ELECTRONICS PLATFORM 1 (EP1) COVER

Aluminum Ground Tabs and Flaps Locations

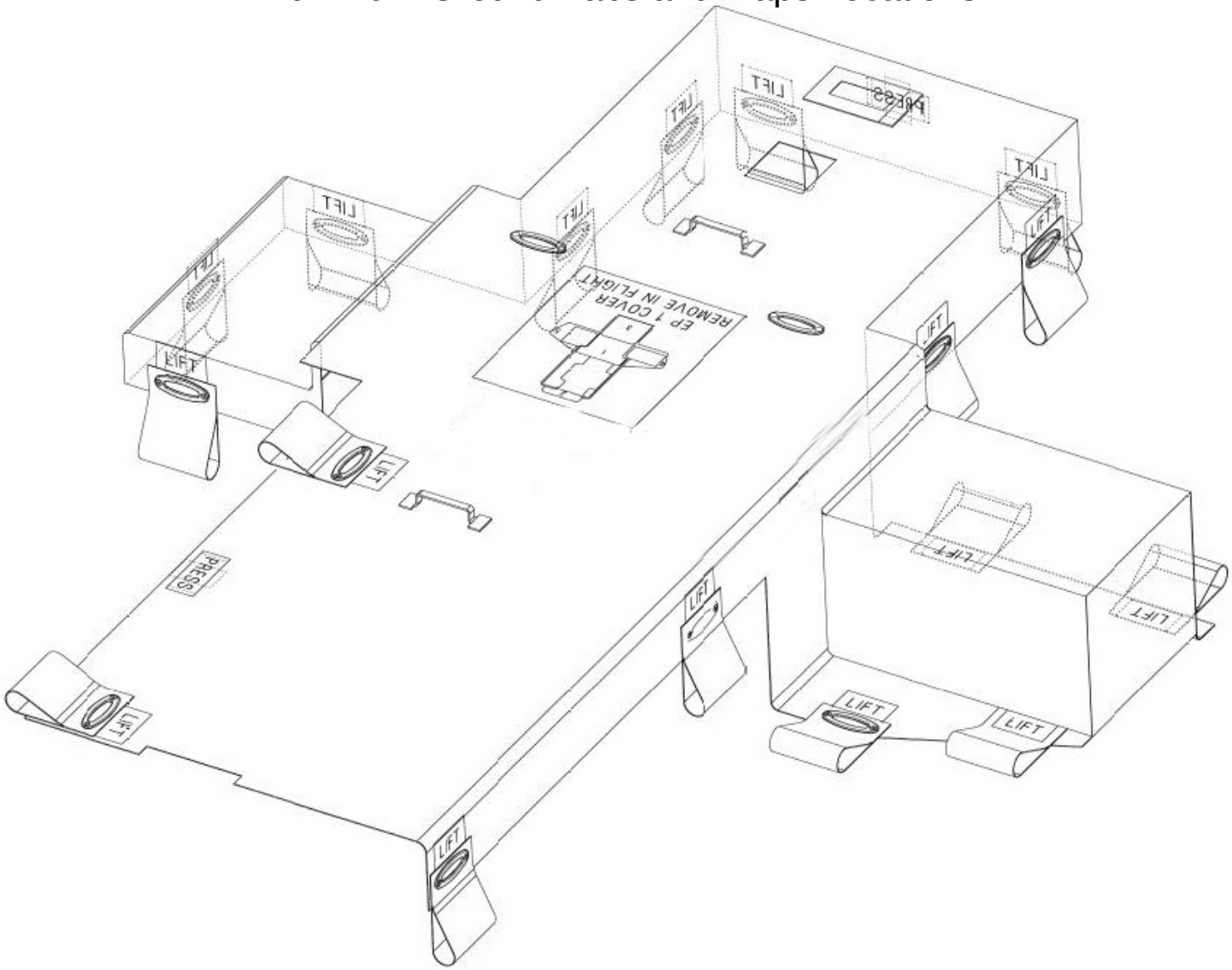

LEE SNARE REPAIR

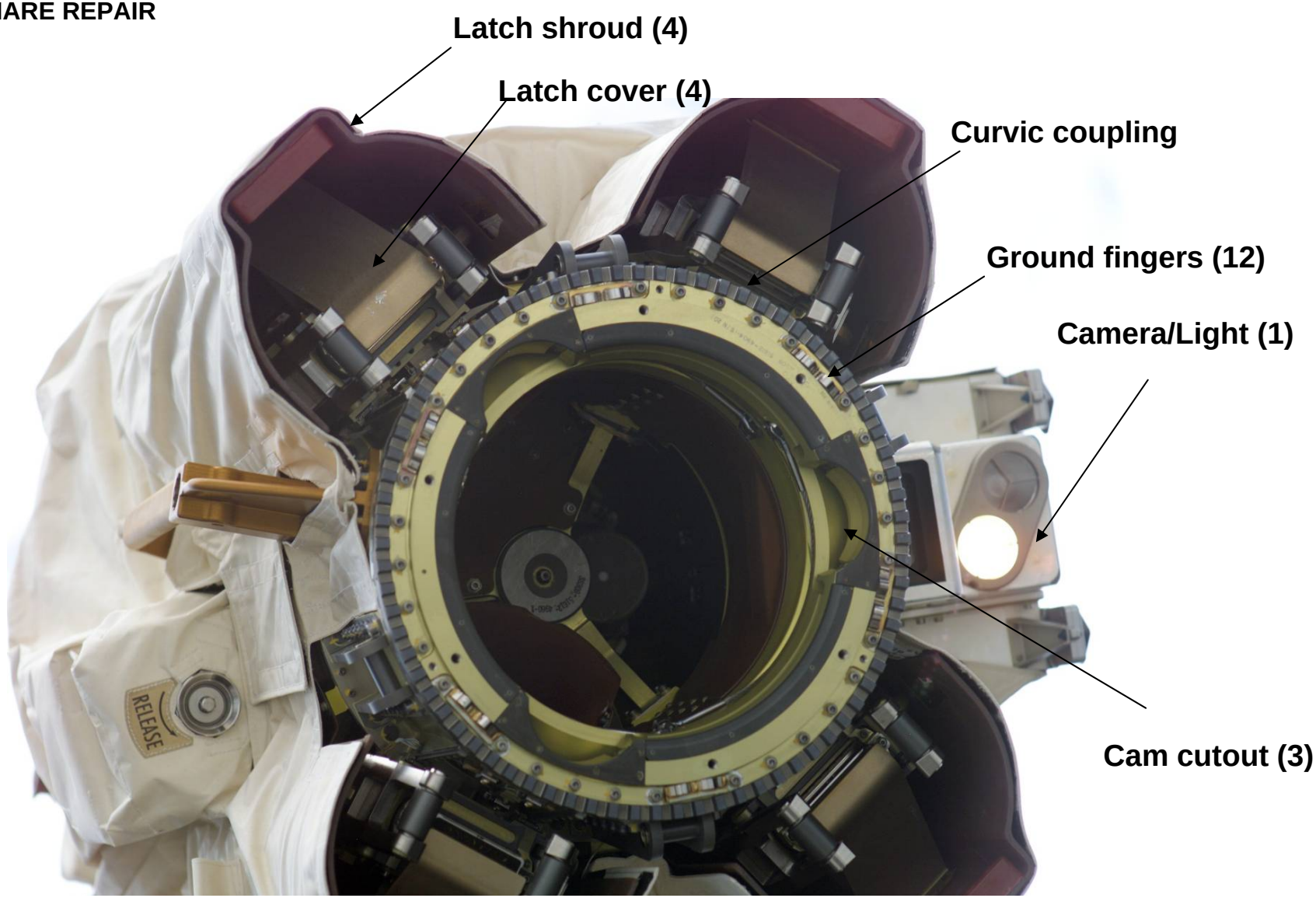

LEE SNARE REPAIR (Cont)

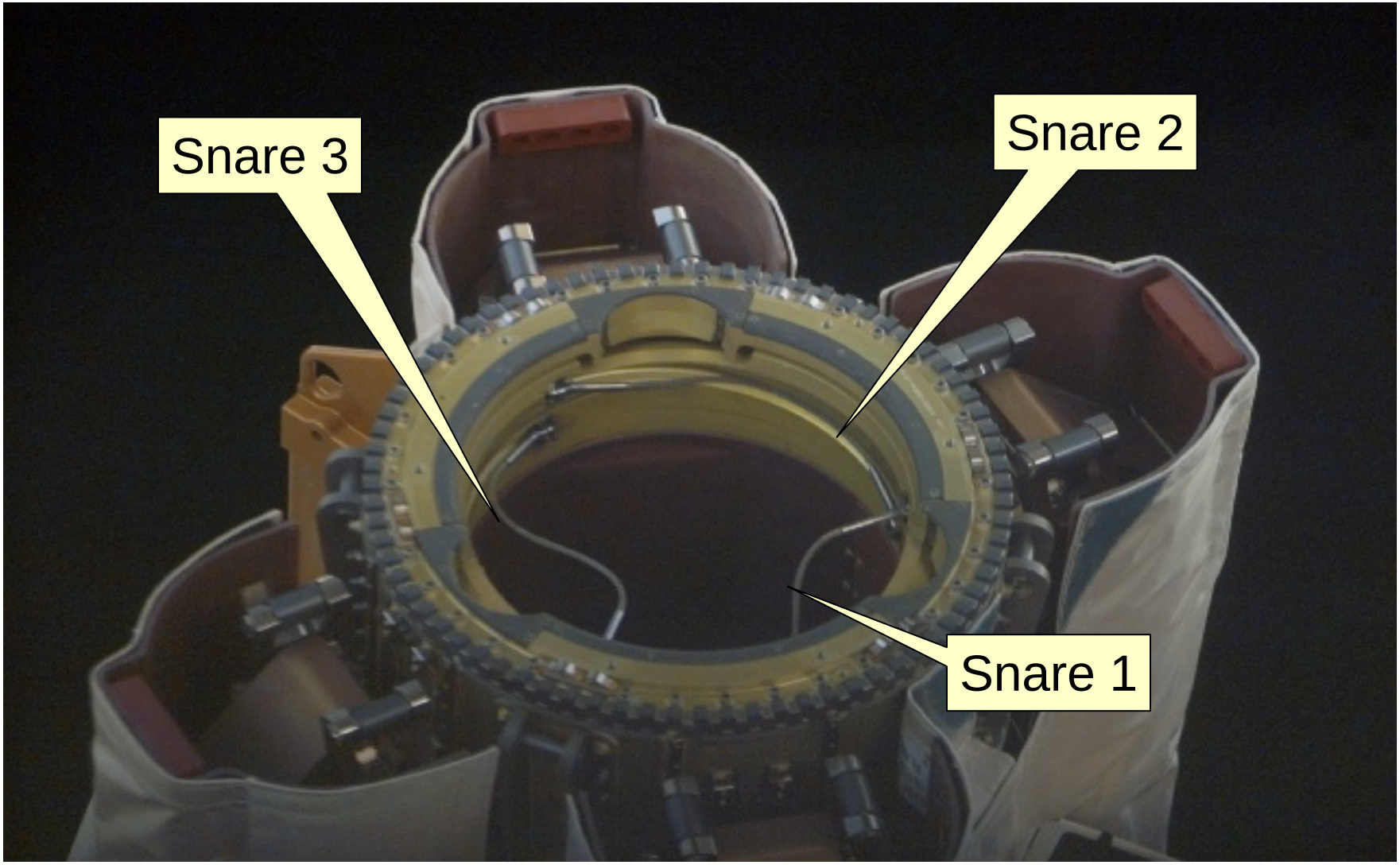

UCCAS/PAS DEPLOY

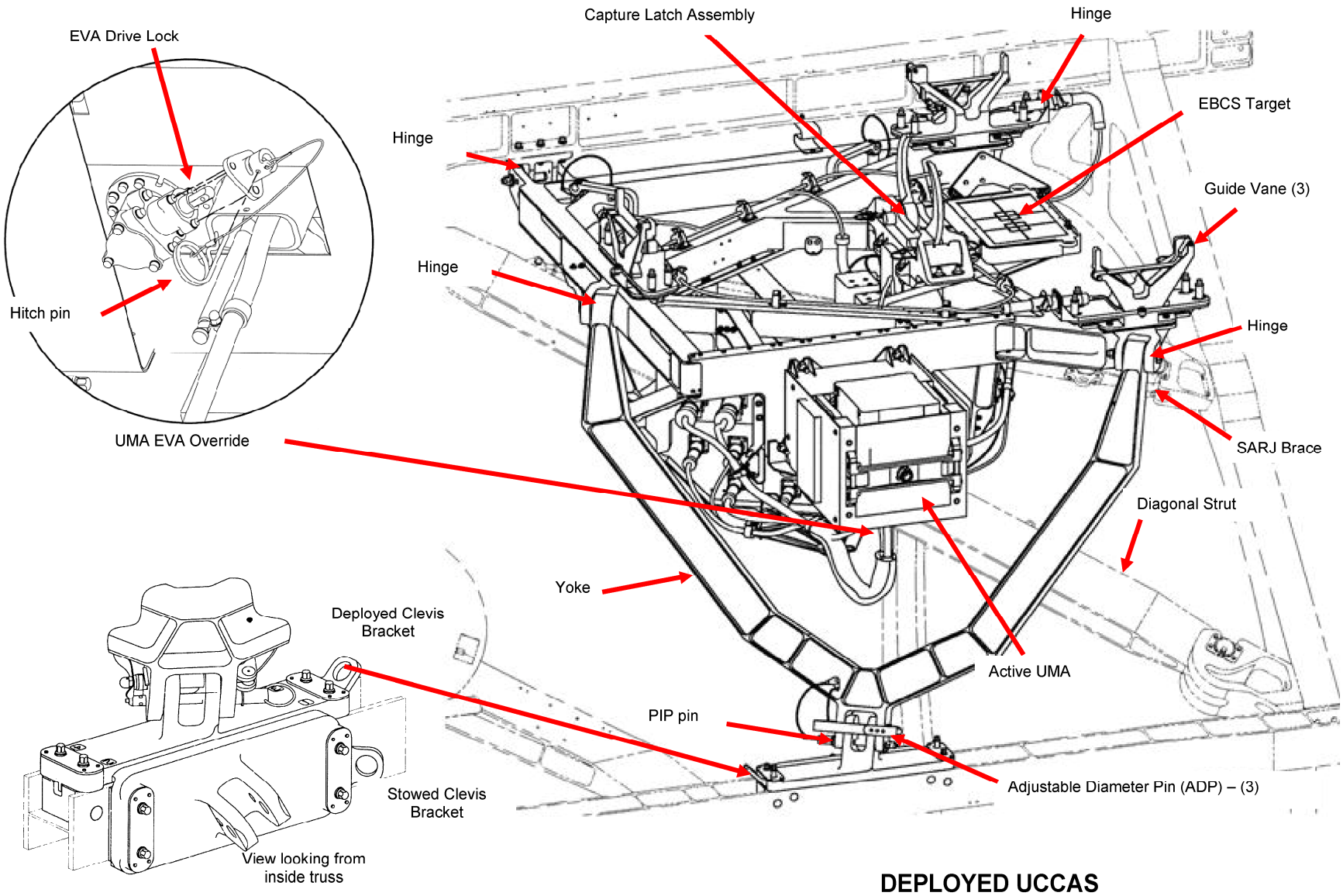

DEPLOYED UCCAS

UCCAS/PAS DEPLOY (Cont)

HINGE LINE ADP ORIENTATION

UCCAS/PAS DEPLOY (Cont)

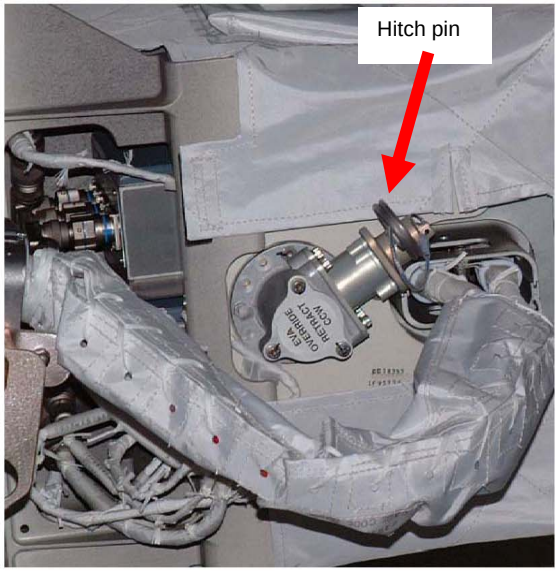

Active UMA EVA Override with Anti-Rotation Cap

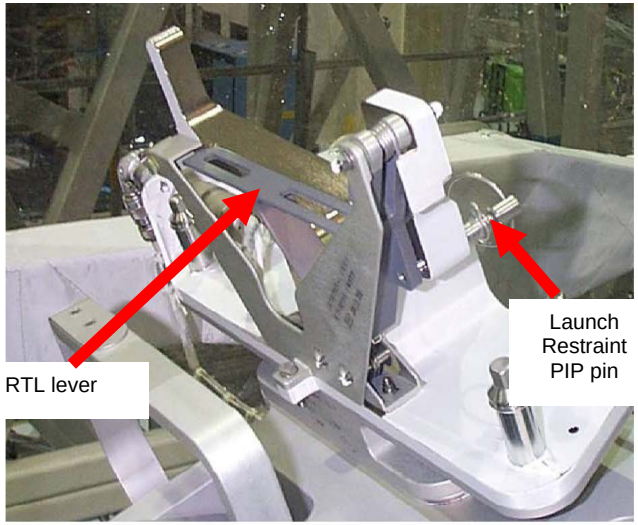

Guide Vane and RTL lever

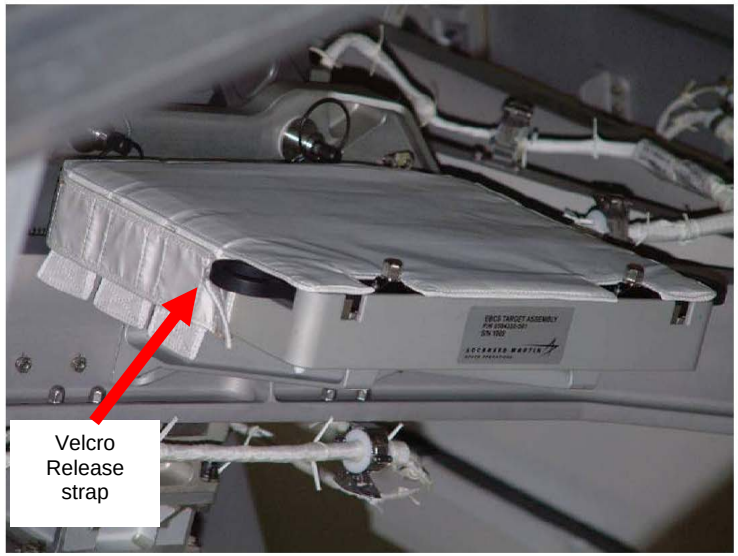

EBCS Target with Cover

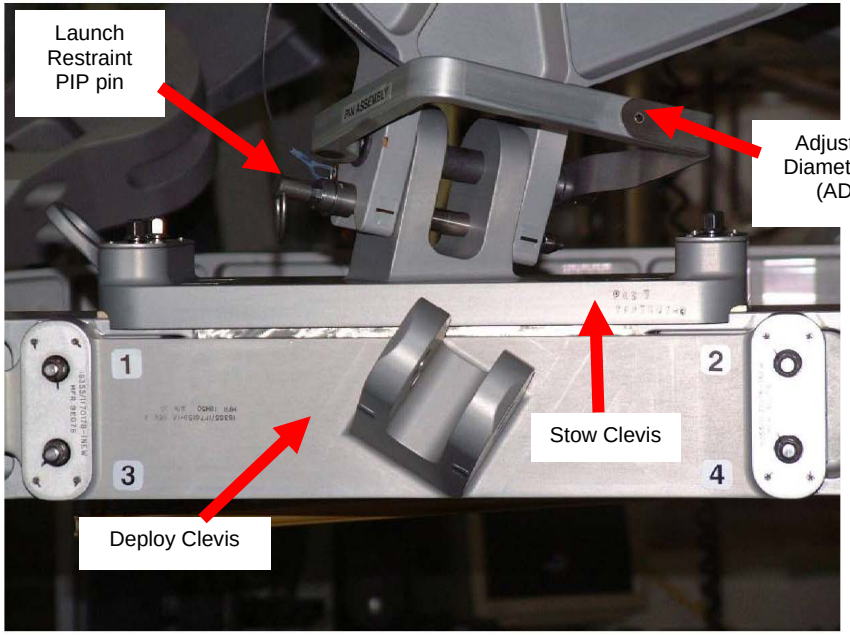

Deployed and Stowed Clevis Brackets (looking from zenith)

JLP GPS ANTENNA WITH COVER

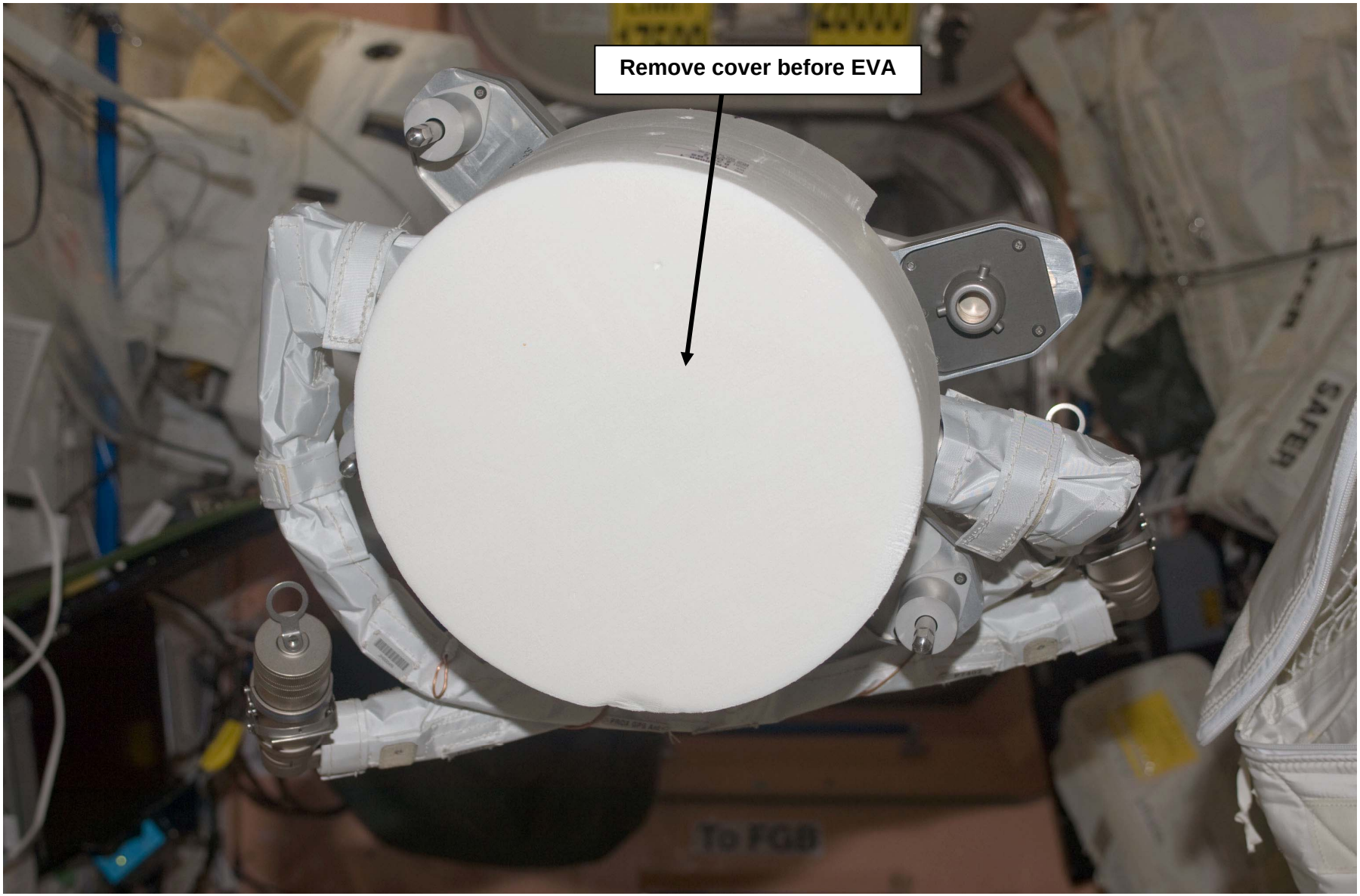

JLP GPS ANTENNA OVERVIEW

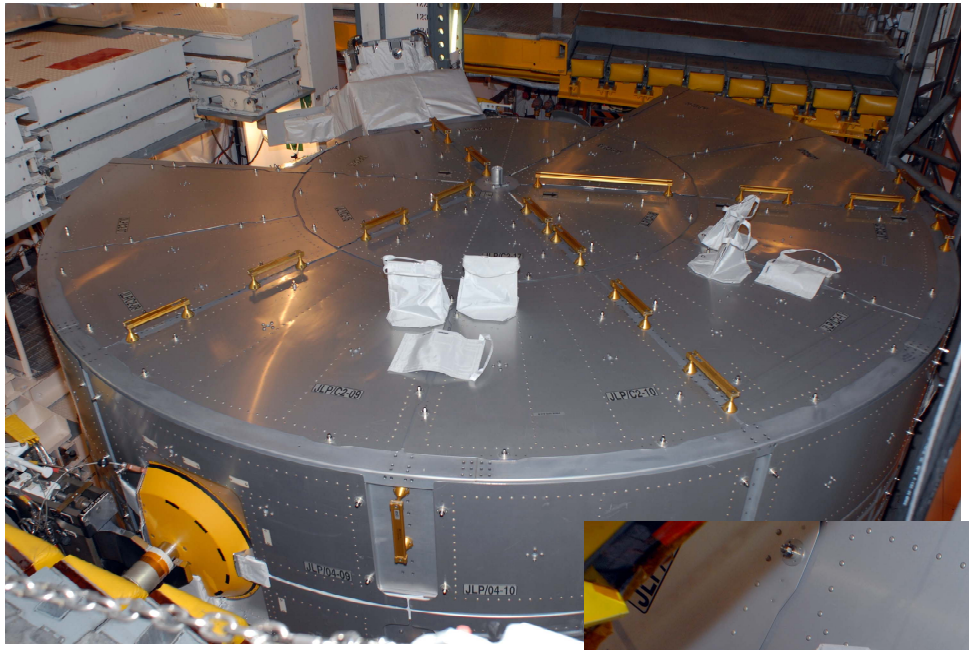

JLP GPS ANTENNA OVERVIEW (Cont)

S126E010957

JLP GPS ANTENNA CABLE/CONNECTOR LOCATION AND ID

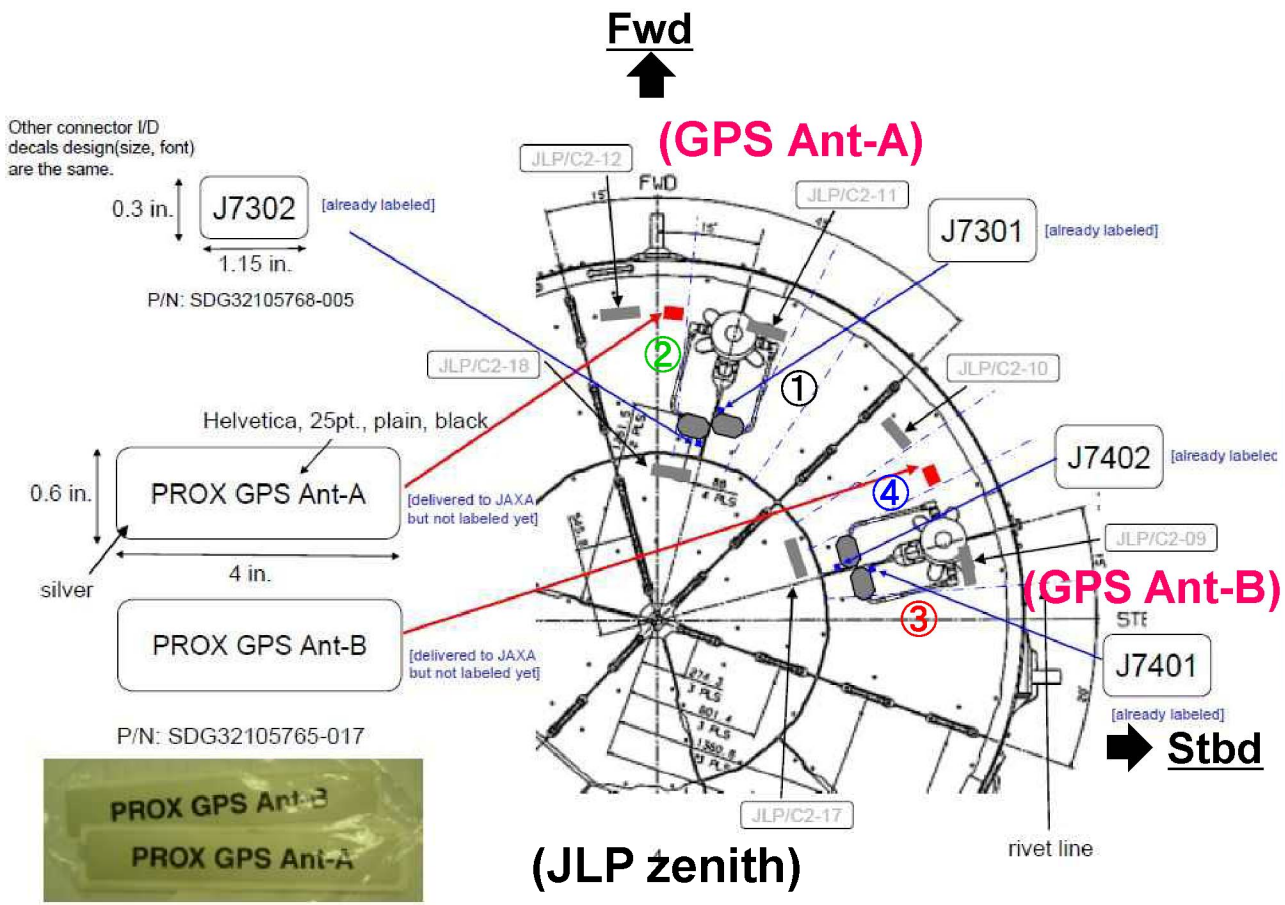

Cable ID

① "PROX GPS Ant Cable-A-01"
② "PROX GPS Ant Cable-A-02"
③ "PROX GPS Ant Cable-B-01"
④ "PROX GPS Ant Cable-B-02"

Connector ID

JEM Power Line	GPS Ant-A	GPS Ant-B
A-string	**Cable ①** (JLP side) P7301⇔J7301 (Ant side) P7351⇔J1	**Cable ③** (JLP side) P7401⇔J7401 (Ant side) P7451⇔J1
B-string	**Cable ②** (JLP side) P7302⇔J7302 (Ant side) P7352⇔J2	**Cable ④** (JLP side) P7402⇔J7402 (Ant side) P7452⇔J2

(P:Plug, J:Jack)

WETA ASSY AND S3 CP1 INSTALL BRACKET

WETA

CP1 WETA INSTALL

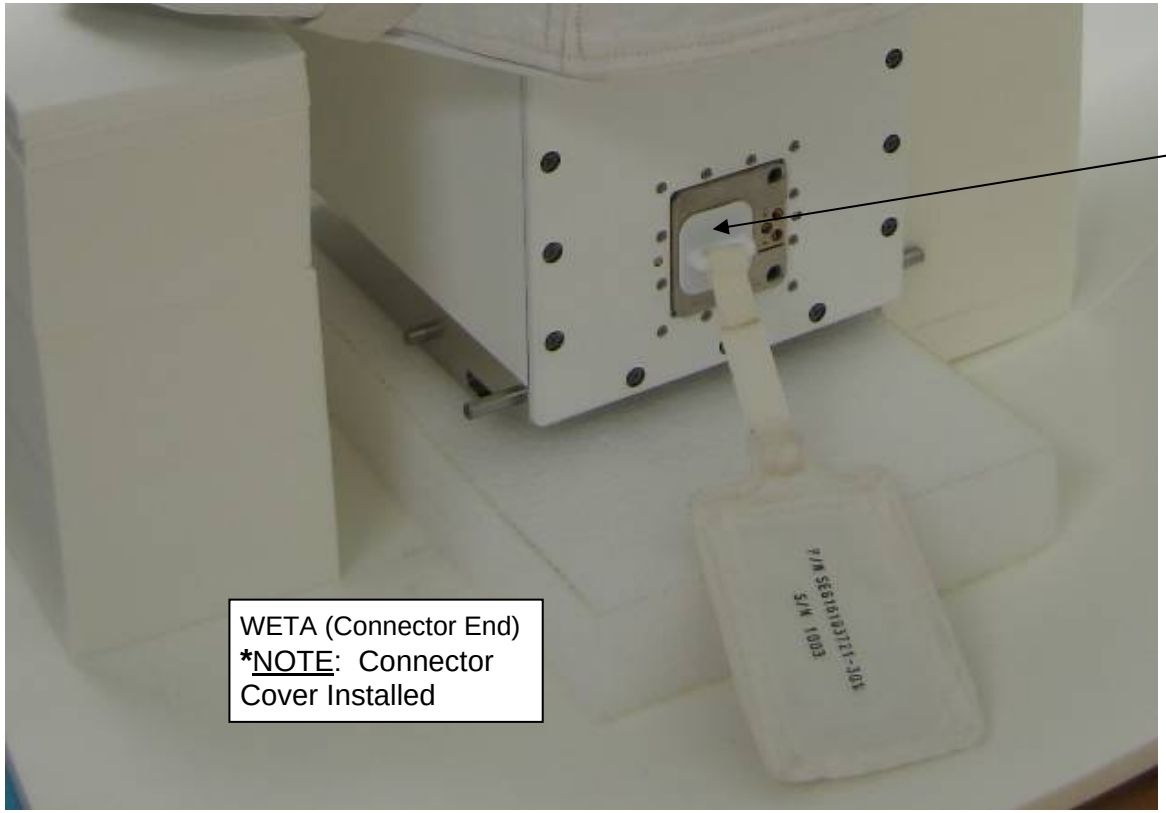

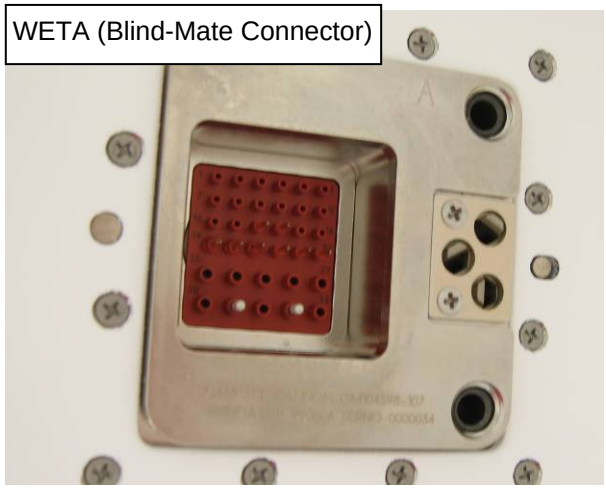

ETVCG DUMMY BOX

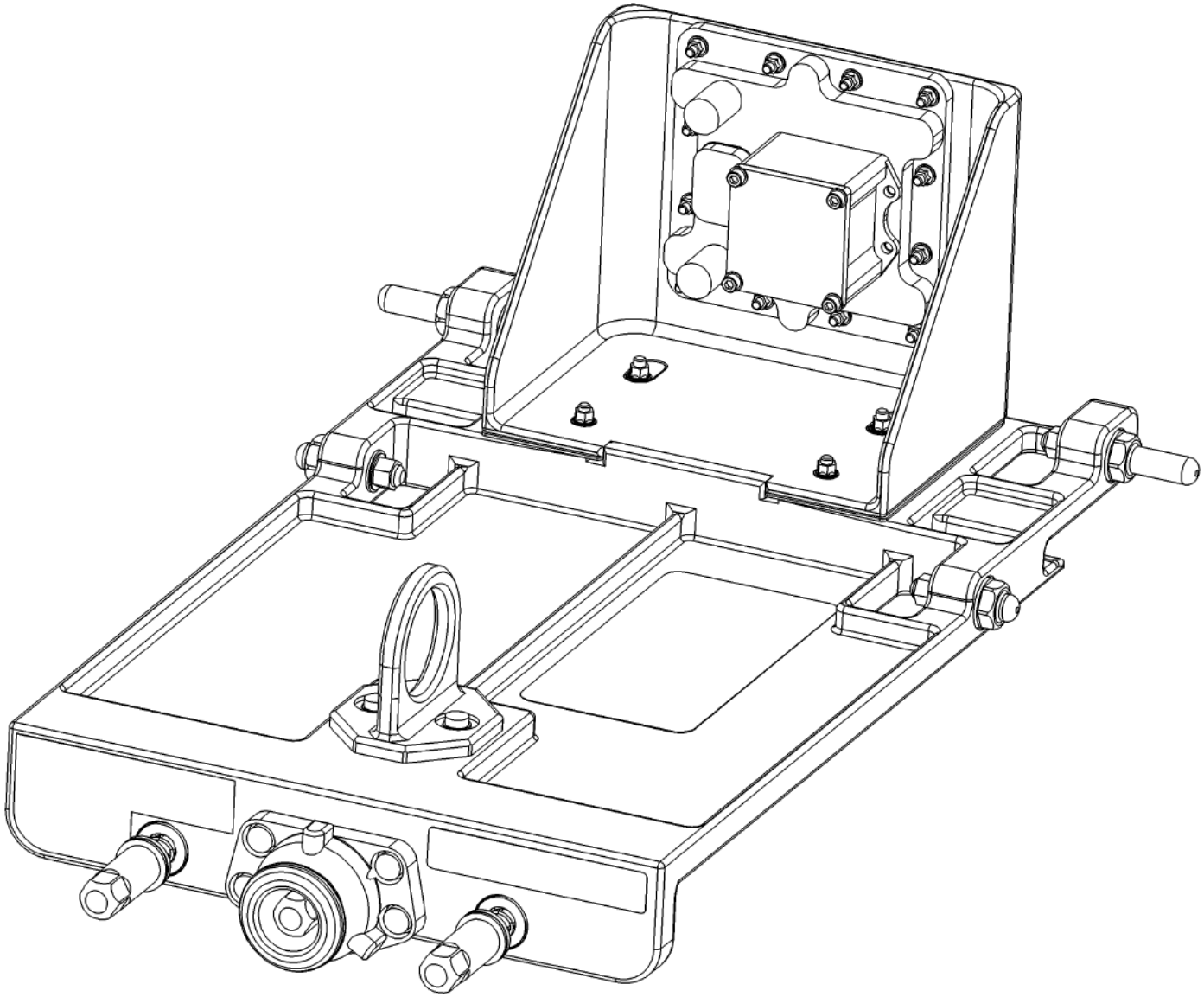

S0 1A_D RPCM

CONNECTOR GROUNDING SLEEVES

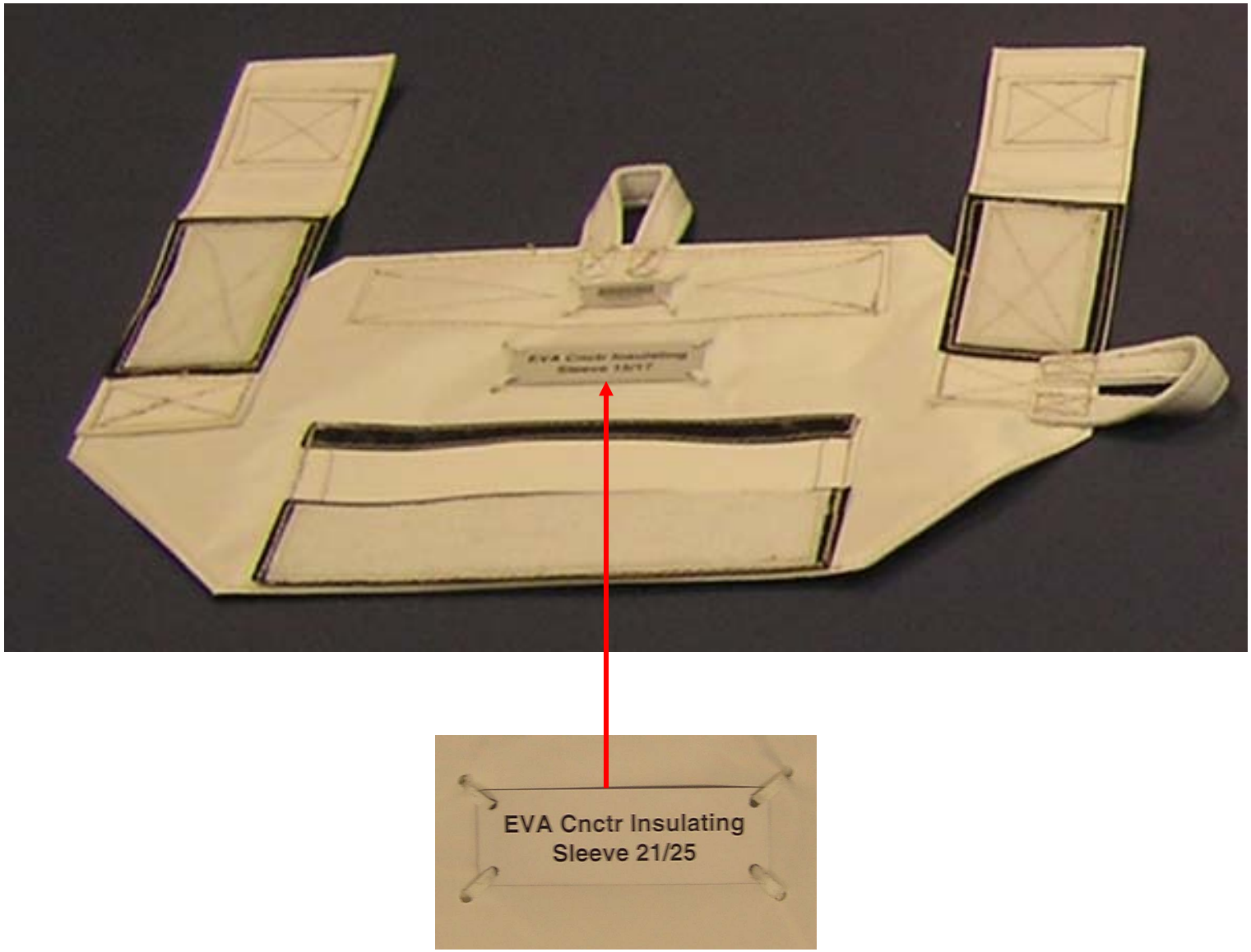

ORU CONTINGENCY TIE-DOWN DEFINITIONS

Adjustable Tether (16-26")

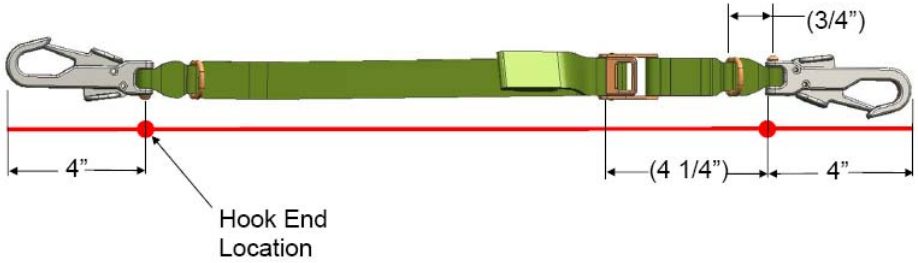

Adjustable Tether End To End Configuration (32-52")

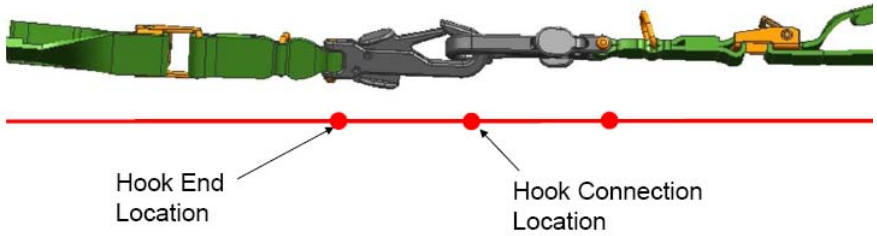

Long Duration Tie Down Tether (24-84")

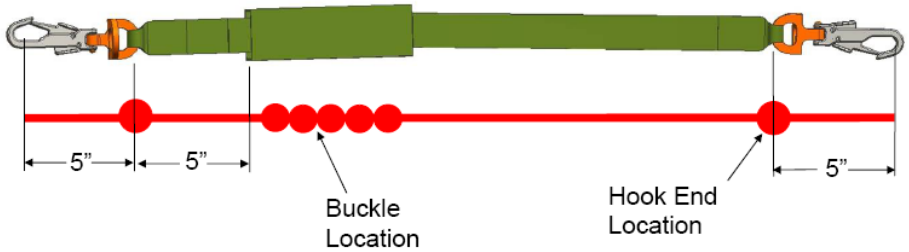

Long Duration Tie Down Tether End To End Configuration (48-168")

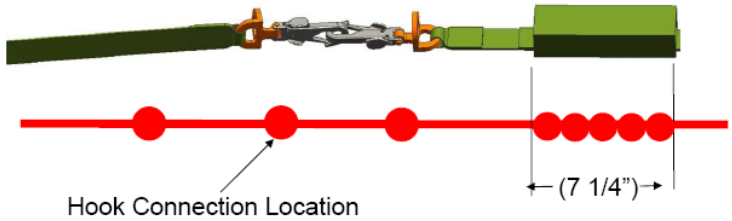

Space Shuttle Program
FLIGHT DATA FILE

JSC-48024-119
FINAL, REV A

EVA CHECKLIST

STS 119

Flight Cover (trim bottom to expose tabs)