Space Shuttle Program
FLIGHT DATA FILE

JSC-48024-122

EVA Checklist

STS-122 Flight Supplement

Mission Operations Directorate
EVA, Robotics, and Crew Systems Operations Division

Final, Rev A
November 20, 2007

NOTE
This supplement is to be integrated into the generic edition to provide a complete document for the specific flight. Some pages in the generic edition may be replaced with supplemental pages identified as 'TEMP'. These generic pages, if any, must be retained for use on future flights.

National Aeronautics and
Space Administration

Lyndon B. Johnson Space Center
Houston, Texas

Verify this is the correct version for the pending operation (training, simulation or flight).
Electronic copies of FDF books are available. URL: http://mod.jsc.nasa.gov/do3/FDF/index.html

MISSION OPERATIONS DIRECTORATE

EVA CHECKLIST
STS-122 FLIGHT SUPPLEMENT

FINAL, REVISION A
November 20, 2007

PREPARED BY:

Gail A. Schneider
Book Manager

APPROVED BY:

Tricia K. Mack
Lead, EVA Systems Group

Dina E. Contella
Lead, EVA Task Group

Angela R. Prince
Chief, EVA and Crew Systems Operations Branch

This document is under the configuration control of the Crew Procedures Control Board (CPCB). All proposed changes must be submitted via FDF Workflow Crew Procedure Change Request (CR) to DO3/FDF Manager.

Additional distribution of this book, for official use only, may be requested in writing to DO3/PMO Administrator. The request must include justification and requester's name, organization, position, and phone number. Contractor requests are made through the NASA or DOD organization supported. Deletions, reduction in quantity, or change of address may be submitted to DO3/FDF Management Office, 281-244-1184.

Incorporates the following:		
482#:	EVA FS-0122	EVA FS-0132
	EVA FS-0123	EVA FS-0133
	EVA FS-0124	EVA FS-0134
	EVA FS-0125	EVA FS-0135
	EVA FS-0126	EVA FS-0136
	EVA FS-0127	EVA FS-0137
	EVA FS-0128	EVA FS-0138
	EVA FS-0129	EVA FS-0139
	EVA FS-0130	EVA FS-0140
	EVA FS-0131	EVA FS-0141

AREAS OF TECHNICAL RESPONSIBILITY

Book Manager, Task Lead	DX32/G. Schneider	281-244-1147
Alternate Book Manager	DX32/A. Jarvis	281-483-2798
Systems Lead	DX35/C. Rodriguez	281-483-1846

EVA CHECKLIST
STS-122 FLIGHT SUPPLEMENT

LIST OF EFFECTIVE PAGES

FINAL	09/20/07
REV A	11/20/07

Sign Off	*	122/FIN A
FS ii	*	122/FIN A
iii	*	generic
iv	*	generic
FS v	*	122/FIN A
FS vi	*	122/FIN A
FS vii	*	122/FIN A
FS viii	*	122/FIN A
FS ix	*	122/FIN A
FS x	*	122/FIN A
FS xi		122/FIN A
FS xii		122/FIN A
FS xiii		122/FIN A
FS xiv		122/FIN A
FS xv		122/FIN A
FS xvi		122/FIN A
1-1		generic
1-2		generic
1-3		generic
1-4		generic
1-5		generic
1-6		generic
1-7		generic
1-8		generic
1-9		generic
1-10		generic
TEMP FS 2-1		122/FIN A
TEMP FS 2-2		ALL/FIN A
2-3		generic
2-4		generic
TEMP FS 2-5		122/FIN A
TEMP FS 2-6		ALL/FIN A
FS 2-7		122/FIN A
FS 2-8		122/FIN A
FS 2-9		122/FIN A
FS 2-10		122/FIN A
FS 2-11		122/FIN A
FS 2-12		122/FIN A
FS 2-13		122/FIN A
FS 2-14		122/FIN A
FS 2-15		122/FIN A
FS 2-16		122/FIN A
FS 2-17		122/FIN A
FS 2-18		122/FIN A
3-1		generic
3-2		generic
3-3		generic
3-4		generic
3-5		generic
3-6		generic
3-7		generic
3-8		generic
3-9		generic
CC 3-10		generic
CC 3-11		generic
3-12		generic
4-1		generic
4-2		generic
4-3		generic
4-4		generic
4-5		generic
4-6		generic
4-7		generic
4-8		generic
4-9		generic
4-10		generic
4-11		generic
4-12		generic
5-1		generic
5-2		generic
5-3		generic
5-4		generic
A6-1		generic
CC A6-2		generic
6-3		generic
CC 6-4		generic
FS 7-1		122/FIN A
FS 7-2		122/FIN A
FS 7-3		122/FIN A
FS 7-4		122/FIN A
FS 7-5		122/FIN A
FS 7-6		122/FIN A
FS 7-7		122/FIN A
FS 7-8		122/FIN A
FS 7-9		122/FIN A
FS 7-10		122/FIN A
FS 7-11		122/FIN A
FS 7-12		122/FIN A
FS 7-13		122/FIN A
FS 7-14		122/FIN A
FS 7-15		122/FIN A
FS 7-16		122/FIN A
FS 7-17		122/FIN A
FS 7-18		122/FIN A
FS 7-19		122/FIN A
FS 7-20		122/FIN A
FS 7-21		122/FIN A
FS 7-22		122/FIN A

* – Omit from flight book

FS 7-23 ..... 122/FIN A
FS 7-24 ..... 122/FIN A
FS 7-25 ..... 122/FIN A
FS 7-26 ..... 122/FIN A
FS 7-27 ..... 122/FIN A
FS 7-28 ..... 122/FIN A
FS 7-29 ..... 122/FIN A
FS 7-30 ..... 122/FIN A
FS 7-31 ..... 122/FIN A
FS 7-32 ..... 122/FIN A
FS 7-33 ..... 122/FIN A
FS 7-34 ..... 122/FIN A
FS 7-35 ..... 122/FIN A
FS 7-36 ..... 122/FIN A
FS 7-37 ..... 122/FIN A
FS 7-38 ..... 122/FIN A
FS 7-39 ..... 122/FIN A
FS 7-40 ..... 122/FIN A
FS 7-41 ..... 122/FIN A
FS 7-42 ..... 122/FIN A
FS 7-43 ..... 122/FIN A
FS 7-44 ..... 122/FIN A
FS 7-45 ..... 122/FIN A
FS 7-46 ..... 122/FIN A
FS 7-47 ..... 122/FIN A
FS 7-48 ..... 122/FIN A
FS 7-49 ..... 122/FIN A
FS 7-50 ..... 122/FIN A
FS 7-51 ..... 122/FIN A
FS 7-52 ..... 122/FIN A
FS 7-53 ..... 122/FIN A
FS 7-54 ..... 122/FIN A
FS 7-55 ..... 122/FIN A
FS 7-56 ..... 122/FIN A
FS 7-57 ..... 122/FIN A
FS 7-58 ..... 122/FIN A
FS 7-59 ..... 122/FIN A
FS 7-60 ..... 122/FIN A
FS 7-61 ..... 122/FIN A
FS 7-62 ..... 122/FIN A
FS 7-63 ..... 122/FIN A
FS 7-64 ..... 122/FIN A
FS 7-65 ..... 122/FIN A
FS 7-66 ..... 122/FIN A
FS 7-67 ..... 122/FIN A
FS 7-68 ..... 122/FIN A
FS 7-69 ..... 122/FIN A
FS 7-70 ..... 122/FIN A
FS 7-71 ..... 122/FIN A
FS 7-72 ..... 122/FIN A
FS 7-73 ..... 122/FIN A
FS 7-74 ..... 122/FIN A
FS 7-75 ..... 122/FIN A
FS 7-76 ..... 122/FIN A
FS 7-77 ..... 122/FIN A
FS 7-78 ..... 122/FIN A
FS 7-79 ..... 122/FIN A
FS 7-80 ..... 122/FIN A
FS 7-81 ..... 122/FIN A
FS 7-82 ..... 122/FIN A
FS 7-83 ..... 122/FIN A
FS 7-84 ..... 122/FIN A
FS 7-85 ..... 122/FIN A
FS 7-86 ..... 122/FIN A
FS 7-87 ..... 122/FIN A
FS 7-88 ..... 122/FIN A
FS 7-89 ..... 122/FIN A
FS 7-90 ..... 122/FIN A
FS 7-91 ..... 122/FIN A
FS 7-92 ..... 122/FIN A
FS 7-93 ..... 122/FIN A
FS 7-94 ..... 122/FIN A
FS 7-95 ..... 122/FIN A
FS 7-96 ..... 122/FIN A
FS 7-97 ..... 122/FIN A
FS 7-98 ..... 122/FIN A
FS 7-99 ..... 122/FIN A
FS 7-100 ..... 122/FIN A
FS 7-101 ..... 122/FIN A
FS 7-102 ..... 122/FIN A
FS 7-103 ..... 122/FIN A
FS 7-104 ..... 122/FIN A
FS 7-105 ..... 122/FIN A
FS 7-106 ..... 122/FIN A
FS 7-107 ..... 122/FIN A
FS 7-108 ..... 122/FIN A
FS 7-109 ..... 122/FIN A
FS 7-110 ..... 122/FIN A
TEMP FS 8-1 ..... 122/FIN A
TEMP FS 8-2 ..... ALL/FIN A
8-3 ..... generic
8-4 ..... generic
8-5 ..... generic
8-6 ..... generic
8-7 ..... generic
8-8 ..... generic
FS 8-9 ..... 122/FIN A
FS 8-10 ..... 122/FIN A
FS 8-11 ..... 122/FIN A
FS 8-12 ..... 122/FIN A
FS 8-13 ..... 122/FIN A
FS 8-14 ..... 122/FIN A
9-1 ..... generic
9-2 ..... generic
9-3 ..... generic
9-4 ..... generic
9-5 ..... generic
9-6 ..... generic

TEMP FS 10-1 ..... 122/FIN A
TEMP FS 10-2 ..... ALL/FIN A
10-3 ..... generic
10-4 ..... generic
10-4a ..... generic
10-4b ..... generic
10-5 ..... generic
10-6 ..... generic
10-7 ..... generic
10-8 ..... generic
10-9 ..... generic
10-10 ..... generic
10-11 ..... generic
10-12 ..... generic
10-13 ..... generic
10-14 ..... generic
FS CC 10-15 ..... 122/FIN A
FS CC 10-16 ..... 122/FIN A
FS 10-17 ..... 122/FIN A
FS 10-18 ..... 122/FIN A
11-1 ..... generic
11-2 ..... generic
11-3 ..... generic
11-4 ..... generic
12-i ..... generic
12-ii ..... generic
TEMP FS 12-1 ..... 122/FIN A
TEMP FS 12-2 ..... ALL/FIN A
12-3 ..... generic
12-4 ..... generic
12-5 ..... generic
12-6 ..... generic
12-7 ..... generic
12-8 ..... generic
12-9 ..... generic
12-10 ..... generic
12-11 ..... generic
12-12 ..... generic
12-13 ..... generic
12-14 ..... generic
12-15 ..... generic
12-16 ..... generic
12-17 ..... generic
12-18 ..... generic
12-19 ..... generic
12-20 ..... generic
12-21 ..... generic
12-22 ..... generic
12-23 ..... generic
12-24 ..... generic
12-25 ..... generic
12-26 ..... generic
FS 12-27 ..... 122/FIN A
FS 12-28 ..... 122/FIN A
FS 12-29 ..... 122/FIN A
FS 12-30 ..... 122/FIN A
FS CC 12-31 ..... 122/FIN A
FS CC 12-32 ..... 122/FIN A
FS 13-1 ..... 122/FIN A
FS 13-2 ..... 122/FIN A
14-1 ..... generic
14-2 ..... generic
14-3 ..... generic
14-4 ..... generic
14-5 ..... generic
14-6 ..... generic
14-7 ..... generic
14-8 ..... generic
14-9 ..... generic
14-10 ..... generic
14-11 ..... generic
14-12 ..... generic
14-13 ..... generic
14-14 ..... generic
14-15 ..... generic
14-16 ..... generic
14-17 ..... generic
14-18 ..... generic
14-19 ..... generic
14-20 ..... generic
14-21 ..... generic
14-22 ..... generic
15-1 ..... generic
15-2 ..... generic
15-3 ..... generic
15-4 ..... generic
15-5 ..... generic
15-6 ..... generic
15-7 ..... generic
15-8 ..... generic
15-9 ..... generic
15-10 ..... generic
15-11 ..... generic
15-12 ..... generic
15-13 ..... generic
15-14 ..... generic
16-i ..... generic
16-ii ..... generic
TEMP FS 16-1 ..... 122/FIN A
TEMP FS 16-2 ..... ALL/FIN A
FS 16-3 ..... 122/FIN A
FS 16-4 ..... 122/FIN A
FS 16-5 ..... 122/FIN A
FS 16-6 ..... 122/FIN A
FS 16-7 ..... 122/FIN A
FS 16-8 ..... 122/FIN A
FS 16-9 ..... 122/FIN A
FS 16-10 ..... 122/FIN A
FS 16-11 ..... 122/FIN A
FS 16-12 ..... 122/FIN A

FS 16-13 ..... 122/FIN A
FS 16-14 ..... 122/FIN A
FS 16-15 ..... 122/FIN A
FS 16-16 ..... 122/FIN A
FS 16-17 ..... 122/FIN A
FS 16-18 ..... 122/FIN A
FS 16-19 ..... 122/FIN A
FS 16-20 ..... Δ 122/FIN A
FS 16-21 ..... 122/FIN A
FS 16-22 ..... 122/FIN A
FS 16-23 ..... 122/FIN A
FS 16-24 ..... 122/FIN A
FS 16-25 ..... 122/FIN A
FS 16-26 ..... 122/FIN A
FS 16-27 ..... 122/FIN A
FS 16-28 ..... 122/FIN A
FS 16-29 ..... 122/FIN A
FS 16-30 ..... 122/FIN A
FS 16-31 ..... 122/FIN A
FS 16-32 ..... 122/FIN A
FS 16-33 ..... 122/FIN A
FS 16-34 ..... 122/FIN A
17-1 ..... generic
17-2 ..... generic
FS 18-1 ..... 122/FIN A
FS 18-2 ..... 122/FIN A
FS 18-3 ..... 122/FIN A
FS 18-4 ..... 122/FIN A
FS 18-5 ..... 122/FIN A
FS 18-6 ..... 122/FIN A
FS 18-7 ..... 122/FIN A
FS 18-8 ..... 122/FIN A
FS 18-9 ..... 122/FIN A
FS 18-10 ..... 122/FIN A
FS 18-11 ..... 122/FIN A
FS 18-12 ..... 122/FIN A
FS 18-13 ..... 122/FIN A
FS 18-14 ..... 122/FIN A
FS 18-15 ..... 122/FIN A
FS 18-16 ..... 122/FIN A
FS 18-17 ..... 122/FIN A
FS 18-18 ..... 122/FIN A
FS 18-19 ..... 122/FIN A
FS 18-20 ..... 122/FIN A
FS 18-21 ..... 122/FIN A
FS 18-22 ..... 122/FIN A
FS 18-23 ..... 122/FIN A
FS 18-24 ..... 122/FIN A
FS 18-25 ..... 122/FIN A
FS 18-26 ..... 122/FIN A
FS 18-27 ..... 122/FIN A
FS 18-28 ..... 122/FIN A
FS 18-29 ..... 122/FIN A
FS 18-30 ..... 122/FIN A
FS 18-31 ..... 122/FIN A
FS 18-32 ..... 122/FIN A
FS 18-33 ..... 122/FIN A
FS 18-34 ..... 122/FIN A
FS 18-35 ..... 122/FIN A
FS 18-36 ..... 122/FIN A
FS 18-37 ..... 122/FIN A
FS 18-38 ..... 122/FIN A
FS 18-39 ..... 122/FIN A
FS 18-40 ..... 122/FIN A
FS 18-41 ..... 122/FIN A
FS 18-42 ..... 122/FIN A
FS 18-43 ..... 122/FIN A
FS 18-44 ..... 122/FIN A
FS 18-45 ..... 122/FIN A
FS 18-46 ..... 122/FIN A
FS 18-47 ..... 122/FIN A
FS 18-48 ..... 122/FIN A
FS 18-49 ..... 122/FIN A
FS 18-50 ..... 122/FIN A
FS 18-51 ..... 122/FIN A
FS 18-52 ..... 122/FIN A
FS 18-53 ..... 122/FIN A
FS 18-54 ..... 122/FIN A
FS 18-55 ..... 122/FIN A
FS 18-56 ..... 122/FIN A
FS 18-57 ..... 122/FIN A
FS 18-58 ..... 122/FIN A
FS 18-59 ..... 122/FIN A
FS 18-60 ..... Δ 122/FIN A
FS 18-61 ..... Δ 122/FIN A
FS 18-62 ..... Δ 122/FIN A
FS 18-63 ..... Δ 122/FIN A
FS 18-64 ..... 122/FIN A
FS 18-65 ..... 122/FIN A
FS 18-66 ..... 122/FIN A
FS 18-67 ..... 122/FIN A
FS 18-68 ..... 122/FIN A
FS 18-69 ..... 122/FIN A
FS 18-70 ..... 122/FIN A
FS 18-71 ..... 122/FIN A
FS 18-72 ..... 122/FIN A
19-i ..... generic
19-ii ..... generic
19-1 ..... generic
19-2 ..... generic
19-3 ..... generic
19-4 ..... generic
19-5 ..... generic
19-6 ..... generic
19-7 ..... generic
19-8 ..... generic
19-9 ..... generic
19-10 ..... generic
19-11 ..... generic
19-12 ..... generic
20-1 ..... * generic
20-2 ..... * generic

Δ – Color page

* – Omit from flight book

EVA CUE CARDS

Title	Ref. Page	Card No.
SAFER CHECKOUT RESULTS (Front)	CC 3-10	generic
SAFER STATUS TROUBLESHOOTING (Back)	CC 3-11	generic
DEPRESS/REPRESS		
Nominal Configuration (Front)	CC A6-2	generic
FAILED LEAK CHECK		
(Back of DEPRESS/REPRESS)	CC 6-4	generic
STS-122 CONSUMABLES TRACKING		
CUE CARD	FS CC 10-15	EVA-5a/122/O/C
STS-122 BATTERY RECHARGE PLAN	FS CC 10-16	EVA-5b/122/O/C
EMERGENCY UNDOCKING EVA TRANSFERS		
(Front)	FS CC 12-31	EVA-6a/122/O/A
(Back)	FS CC 12-32	EVA-6b/122/O/A

This Page Intentionally Blank

CONTENTS PAGE

10.2 PSI CABIN 1-1
MASK PREBREATHE INITIATE 1-2
PREP FOR 10.2 PSI CABIN 1-3
CABIN DEPRESS TO 10.2 PSI 1-4
10.2 PSIA DEPRESS CHART 1-5
10.2 PSI CABIN CONFIG 1-6
MASK PREBREATHE TERMINATE 1-6
10.2 PSI MAINTENANCE 1-7
CABIN REPRESS TO 14.7 PSI 1-8
14.7 PSI CABIN CONFIG 1-9

AIRLOCK CONFIG ..... TEMP FS 2-1
AIRLOCK PREP ..... TEMP FS 2-2
EMU SWAP 2-3
BOOSTER FAN DEACTIVATION/REMOVAL 2-4
BOOSTER FAN INSTALLATION/ACTIVATION 2-4
EMU REMOVAL 2-4
EMU INSTALLATION 2-4
EMU CHECKOUT PREP ..... TEMP FS 2-5
LTA RESTRAINT STRAP REMOVAL ..... TEMP FS 2-6
LTA RESTRAINT STRAP INSTALLATION ..... TEMP FS 2-6
EMU PREP FOR TRANSFER TO ISS ..... FS 2-7
POST-DOCKING EVA TRANSFER/RECONFIG ..... FS 2-10
LV EMU RECONFIGURATION AND SWAP ..... FS 2-12
POST EVA EMU RECONFIGURATION AND TRANSFER ..... FS 2-13

CHECKOUTS 3-1
EMU CHECKOUT 3-2
EMU POWERUP AND COMM CHECK 3-2
PRIMARY REGULATOR/FAN/PUMP CHECK 3-4
SOP CHECK 3-5
BATTERY CHARGE CHECK INIT 3-6
BATTERY CHARGE CHECK TERM 3-6
EMU SWAP DURING CHECKOUT 3-7
POST EMU C/O RECONFIG 3-7
SAFER CHECKOUT 3-8
SELF TEST SEQUENCE 3-9
SAFER CHECKOUT RESULTS ..... CC 3-10
SAFER STATUS TROUBLESHOOTING ..... CC 3-11
REBA POWERED HARDWARE CHECKOUT 3-12

EVA PREP 4-1
MIDDECK PREP 4-2
EVA PREP 4-3
PREP FOR DONNING 4-3
EMU DONNING 4-5
EMU CHECK 4-7
EMU PURGE 4-7
EMU PREBREATHE 4-8
SAFER DONNING 4-8
EVA COMM CONFIG 4-10
EVA COMM DECONFIG 4-10
APPROVED NON-EMU HARDWARE MATRIX 4-11

EMU STATUS 5-1
EMU STATUS 5-2

DEPRESS/REPRESS A6-1
DEPRESS/REPRESS (NOM A/L) ..... CC A6-2
FAILED LEAK CHECK 6-3
FAILED LEAK CHECK (5 PSI) ..... CC 6-4
FAILED LEAK CHECK (14.7/10.2 PSI) ..... CC 6-4

TIMELINES ..... FS 7-1
STS-122 (1E) EVA PLAN ..... FS 7-2
EVA 1
EVA 1 BRIEFING CARD ..... FS 7-3
EVA 1 TOOL CONFIG ..... FS 7-5
EVA 1 INHIBIT PAD ..... FS 7-7
EVA 1 NOTES, CAUTIONS, AND WARNINGS ..... FS 7-9
EVA 1 SUMMARY TIMELINE ..... FS 7-13
EVA 1 EGRESS ..... FS 7-14
PDGF SETUP ..... FS 7-15
PDGF INSTALL ..... FS 7-23
P1 NTA REMOVAL PREP ..... FS 7-30
CLEANUP AND A/L INGRESS ..... FS 7-35
GET-AHEAD TASK: OTSD STOW ..... FS 7-36
EVA 2
EVA 2 BRIEFING CARD ..... FS 7-38
EVA 2 TOOL CONFIG ..... FS 7-40
EVA 2 INHIBIT PAD ..... FS 7-42
EVA 2 NOTES, CAUTIONS, AND WARNINGS ..... FS 7-44
EVA 2 SUMMARY TIMELINE ..... FS 7-48
EVA 2 EGRESS ..... FS 7-49
NTA REMOVE FROM PLB ..... FS 7-50
P1 NTA INSTALL ..... FS 7-53
NTA STOW IN PLB ..... FS 7-59
SSPTS CABLE ROUTING ..... FS 7-62
CLEANUP AND A/L INGRESS ..... FS 7-70
EVA 3
EVA 3 BRIEFING CARD ..... FS 7-71
EVA 3 TOOL CONFIG ..... FS 7-73
EVA 3 INHIBIT PAD ..... FS 7-75
EVA 3 NOTES, CAUTIONS, AND WARNINGS ..... FS 7-77
EVA 3 SUMMARY TIMELINE ..... FS 7-81
EVA 3 EGRESS ..... FS 7-82
SOLAR TRANSFER ..... FS 7-83
CMG TRANSFER ..... FS 7-89
EuTEF TRANSFER ..... FS 7-95
CLEANUP AND A/L INGRESS ..... FS 7-100
COLUMBUS OUTFITTING ..... FS 7-101
GET-AHEADS
LAB MMOD SHIELD CLEANUP ..... FS 7-104
NODE MMOD SHIELD CLEANUP ..... FS 7-107

TOOLS AND STOWAGE ..... TEMP FS 8-1
PORT LIGHTWEIGHT TOOL STOWAGE ASSEMBLY (TSA) ..... TEMP FS 8-2
PGT CHECKOUT 8-3
PGSC-PGT CONNECTION (A31P AND 760XD) 8-4
PROGRAM PGT SETTINGS 8-5
DOWNLOAD/ERASE EVENT LOG 8-5

PGT CONTINGENCIES 8-6
PGT STANDARD SETTINGS 8-7
EVA TOOLS MANAGEMENT ..... FS 8-9
APFR MANAGEMENT – STS-122 (1E) ..... FS 8-12
SAFETY TETHER CONFIGURATION – STS-122 ..... FS 8-13

POST EVA 9-1
POST EVA 9-2
SUIT DOFFING 9-2
SAFER DOFFING 9-2
EMU WATER RECHARGE 9-3
SAFER STOW 9-4
SUIT DRYING/SEAL WIPE 9-4
OXYGEN RECHARGE VERIFICATION 9-4
WATER FILL VERIFICATION 9-4
EMU POWERDOWN/OVERNIGHT STOW 9-5

EMU MAINT/RECHARGE ..... TEMP FS 10-1
WATER RECHARGE ..... TEMP FS 10-2
EMU POWERUP ..... TEMP FS 10-2
WATER FILL ..... TEMP FS 10-2
WATER FILL VERIFICATION ..... TEMP FS 10-2
EMU LiOH CHANGEOUT 10-4
MIDDECK EMU BATTERY RECHARGE (STAND-ALONE) 10-4a
MIDDECK EMU BATTERY RECHARGE/LiOH REPLACEMENT 10-5
INITIATE 10-5
TERMINATE 10-6
IN-SUIT EMU BATTERY RECHARGE/CHARGE VERIFICATION 10-7
INITIATE 10-7
TERMINATE 10-7
EMU POWERDOWN 10-7
HELMET LIGHT/PGT BATTERY RECHARGE 10-8
INITIATE 10-8
TERMINATE 10-9
REBA BATTERY INSTALLATION 10-9
EMU BATTERY REMOVAL/INSTALL 10-10
HELMET LIGHT BULB CHANGEOUT 10-11
REBA BATTERY RECHARGE 10-12
INITIATE 10-12
TERMINATE 10-13
STS-122 CONSUMABLES TRACKING CUE CARD ..... FS CC 10-15
STS-122 BATTERY RECHARGE PLAN ..... FS CC 10-16
POST EVA GLOVE PHOTOS – REQUIRED ..... FS 10-17

POST EVA ENTRY PREP 11-1
POST EVA ENTRY PREP 11-2
SAFER ENTRY STOW 11-2
POST ISS EVA ENTRY PREP 11-3
SAFER ENTRY STOW 11-3

OFF-NOMINAL PROCEDURES 12-i
EMU CONTINGENCY PROCS ..... TEMP FS 12-1
DISPLAY LOSS DURING POWER TRANSFER (WARM RESTART) ... TEMP FS 12-2
VACUUM H2O RECHARGE (MANNED) ..... TEMP FS 12-2
LiOH REPLACEMENT (MANNED) 12-3
BATTERY REPLACEMENT (MANNED) 12-4
WATER DUMP 12-6
SCU SWAP UNMANNED) 12-7

SCU SWAP (MANNED) 12-7
EMU COLD RESTART (MANNED) 12-7
12.1 STS EVA DECONTAMINATION 12-8
CONTAMINATION TEST 12-15
SAFER BATTERY CHANGEOUT 12-18
BENDS TREATMENT ADAPTER (BTA) INSTALLATION (IN-SUIT) 12-19
BTA PREP 12-19
BTA TREATMENT 12-19
BENDS TREATMENT ADAPTER (BTA) INSTALLATION (POST SUIT DOFFING) 12-21
BTA PREP 12-21
BTA TREATMENT 12-21
EMU RESIZE 12-24
STS-122 NOMINAL EMU SIZING MATRIX ..... FS 12-27
1E EMU CONTINGENCY RESIZE MATRIX ..... FS 12-29
EMERGENCY UNDOCKING EVA TRANSFERS ..... FS CC 12-31

TPS REPAIR ..... FS 13-1

ORBITER CONTINGENCY EVA 14-1
PAYLOAD BAY EVA NOMENCLATURE 14-2
RMS/PRLA CONTINGENCY EVA 14-3
96 BOLT PRE-EVA TOOL CONFIG 14-13
96 BOLT EVA TIMELINE 14-14
CAPTURE LATCH MANUAL RELEASE (ODS/PMA) 14-19
96 BOLT EVA LAYOUT 14-21
PLBD LATCH TOOL PLACEMENT WITH DUAL LATCH GANG FAILURES 14-22

EVA CUFF CHECKLIST (CIL) 15-1
NORMAL EVA STATUS 15-2
DCM CONFIGURATION 15-2
EMU MALFUNCTION INDEX 15-2
DECOMPRESSION SICKNESS (DCS) 15-3
DECOMPRESSION SICKNESS (DCS) (CONT) 15-3
ABORT EVA 15-3
TERMINATE EVA 15-3
SUIT P EMERG 15-4
SOP O2 ON 15-4
BATT AMPS HIGH 15-4
BATT V DECAY OR BATT VDC LOW 15-4
SUIT P LOW 15-5
SUIT P HIGH 15-5
SOP P LOW 15-5
O2 USE HIGH 15-5
SUBLM PRESS 15-6
H2O GP LOW 15-6
RESRV H2O ON 15-6
H2O WP HIGH 15-6
NO VENT FLOW 15-7
CO2 HIGH OR MONITOR CO2 15-7
CO2 SNSR BAD 15-7
COMM FAILURE 15-7
AIR FLOW CONTAMINATION 15-8
LOSS OF COOLING 15-8
RLF V FAIL 15-8
MISC MSGS 1 15-8
MISC MSGS (CONT)/TIME LF 15-9
AIRLOCK LATCH DISCONNECT 15-9
AIRLOCK INGRESS 15-9

FOLLOWING PAGES NOT IN EV CUFF

RADIATOR ACTUATOR DISCONNECT 15-9
PLBD DRIVE CUT 15-10
DOOR DRIVE RESTRAINT 15-10
DOOR DRIVE DISCONNECT 15-10
WINCH OPERATIONS 15-10
WINCH OPERATIONS (CONT) 15-11
3-PT TOOL INSTALLATION 15-11
CL LATCH TOOL 15-11
RMS JOINT ALIGN 15-11
MPM STOW/DEPLOY 15-12
RMS TIEDOWN 15-12
RMS FLIGHT RELEASABLE GRAPPLE FIXTURE RELEASE 15-12
PRLA OPEN/CLOSE 15-12
PRLA OPEN/CLOSE (CONT) 15-13
KU ANTENNA STOW 15-13
KU ANTENNA STOW (CONT) 15-13
AIRLOCK EGRESS 15-13

FLIGHT SPECIFIC REFERENCE 16-i
UNSCHEDULED/CONTINGENCY EVA TASKS ..... TEMP FS 16-1
1E WORKAROUNDS CRIBSHEET ..... FS 16-3
P6 PDGF RETRIEVE ..... FS 16-15
NTA INSTALL ON ESP-2 ..... FS 16-21
COL VENT CAP INSTALLATION/REMOVAL ..... FS 16-25

GENERIC EVA REFERENCE 17-1

FLIGHT SPECIFIC EVA REFERENCE ..... FS 18-1
PLB LAYOUT ..... FS 18-3
ICC LAUNCH/LANDING CONFIG ..... FS 18-4
COLUMBUS IN PLB – LTA CABLE, CBM SEAL COVERS, PDGF ..... FS 18-5
MDPS PANEL – HOLE CONFIG ..... FS 18-6
MDPS ALLEN TOOL/"T-HANDLE TOOL" ..... FS 18-7
MDPS SOCKET CONSTRAINT NEAR SILL ..... FS 18-8
PDGF ON SIDEWALL CARRIER ..... FS 18-9
PDGF SIDEWALL CARRIER ..... FS 18-10
EDF FASTENER (NBL/FLIGHT UNIT) ..... FS 18-11
PDGF UNDERSIDE ..... FS 18-12
PDGF MOUNTING RING ..... FS 18-13
PDGF CABLE CONNECTIONS ..... FS 18-14
EDF SOCKET INTERFERENCE (COLUMBUS PDGF) ..... FS 18-15
PDGF J400/J401 CONNECTORS ..... FS 18-16
P6 PDGF ..... FS 18-17
EXTERNAL CABLE STOWAGE HARDWARE (ECSH) ..... FS 18-18
CBM SEAL COVER ..... FS 18-19
COLUMBUS PANELS, HANDRAILS, AND WIFs (STBD ENDCONE) ..... FS 18-20
COLUMBUS PANELS, HANDRAILS, AND WIFs (PORT ENDCONE) ..... FS 18-21
COLUMBUS PANELS, HANDRAILS, AND WIFs (ISS FWD FACING SIDE) FS 18-22
COLUMBUS PANELS, HANDRAILS, AND WIFs (ISS AFT FACING SIDE).. FS 18-23
COLUMBUS EXPOSED PAYLOAD FACILITY HANDRAILS ..... FS 18-24
NITROGEN TANK ASSEMBLY (NTA) – FRONT SIDE, ELECTRICAL, BOLTS... FS 18-25
NTA – AFT SIDE, FLUID QDs ..... FS 18-26
NTA MLI ..... FS 18-27
P1 AFT SHROUD ..... FS 18-28

SOFT DOCK MECHANISM ..... FS 18-29
OTSD ..... FS 18-31
OTSD WIF ACTUATION ..... FS 18-32
OTSD ACTIVE CARRIAGE ..... FS 18-33
OTSD PASSIVE CARRIAGE ..... FS 18-35
OTSD PASSIVE CARRIAGE DETAILS ..... FS 18-36
OTSD LABELS ..... FS 18-37
NTA ON CETA ..... FS 18-38
FRAM ..... FS 18-39
SOLAR ..... FS 18-45
SOLAR CAUTION AREAS ..... FS 18-46
EUROPEAN TECHNOLOGY EXPOSURE FACILITY (EuTEF) ..... FS 18-47
EuTEF KEEP-OUT AREAS ..... FS 18-48
EuTEF HAZARD AREAS ..... FS 18-50
EXPOSED PAYLOAD FACILITY ..... FS 18-53
ON-ORBIT INSTALLED HANDRAIL ..... FS 18-55
ON-ORBIT INSTALLED WIF ..... FS 18-56
KEEL PIN COVER ..... FS 18-57
TRUNNION SCUFF PLATE COVER AND TRUNNION PIN COVER ..... FS 18-58
TRUNNION COVER 1/4 TURN FASTENER (GROUNDING) ..... FS 18-59
OIH/WIF LOCATIONS ON COLUMBUS ..... FS 18-60
GAP SPANNERS ON NODE 2 ..... FS 18-63
ESP-2 NADIR SITE 5 FOR CMG ..... FS 18-64
CMG ON FRAM ..... FS 18-66
CMG WITHOUT MLI ..... FS 18-67
ADJUSTABLE SHIM LOCATIONS ..... FS 18-68
CMG WITH MLI ..... FS 18-69
CMG ADJUSTABLE SHIMS ..... FS 18-70
BALLSTACK – MUTEE ..... FS 18-71

EVA EMERGENCY 19-i
EMERGENCY PROCEDURES 19-1
EMERGENCY AIRLOCK REPRESS 19-3
EMERGENCY AIRLOCK REPRESS 19-4
POST EMERGENCY AIRLOCK REPRESS 19-4
SAFER RESCUE 19-5
SAFER RESCUE 19-6
DAP/EVA RESCUE/RETRIEVE 19-7
EVA ORBITER CONFIG 19-7
EVA RESCUE/RETRIEVE 19-9
19.1 DCS TREATMENT 19-10

CUE CARD CONFIGURATION 20-1

AIRLOCK CONFIG

AIRLOCK PREP ..... TEMP FS 2-2
EMU SWAP 2-3
BOOSTER FAN DEACTIVATION/REMOVAL 2-4
BOOSTER FAN INSTALLATION/ACTIVATION 2-4
EMU REMOVAL 2-4
EMU INSTALLATION 2-4
EMU CHECKOUT PREP ..... TEMP FS 2-5
LTA RESTRAINT STRAP REMOVAL ..... TEMP FS 2-6
LTA RESTRAINT STRAP INSTALLATION ..... TEMP FS 2-6
EMU PREP FOR TRANSFER TO ISS ..... FS 2-7
POST-DOCKING EVA TRANSFER/RECONFIG ..... FS 2-10
LV EMU RECONFIGURATION AND SWAP ..... FS 2-12
POST EVA EMU RECONFIGURATION AND TRANSFER ..... FS 2-13

AIRLOCK PREP (50 min)

	Retrieve or unstow following equipment:
MF28G	3/8-in breaker bar, 4-in ext w/3/8-in drive
IFM Tool Kit	1/2-in socket w/3/8-in drive
Vol H	EMU Equipment Bag – attach to middeck wall
	Helmet Lights
	EVA Bag
	Contamination Detection Kit (location flight specific)
FDF Locker	Cuff Checklists (2) – stow in EMU Equipment Bag
	DEPRESS/REPRESS Cue Card

AIRLOCK CONFIG

1. √Inner hatch Equal vlv (two) – OFF

AW18A

2. LTG FLOOD (four) – ON
3. Remove from airlock, as reqd:
   - Airlock Stowage Bag
   - Airlock Floor Pallet using 3/8-in breaker bar, 4-in ext w/3/8-in drive, and 1/2-in socket w/3/8-in drive
4. Stow Vol H Bags in Vol H
5. Transfer to airlock:
   - EVA Bag – install on airlock wall
   - DEPRESS/REPRESS Cue Card
   - Helmet Lights
   - Contamination Detection Kit – install on airlock wall
6. Install IVA foot restraint, as reqd
7. Unbuckle SCU straps, Velcro SCU to wall
8. Install EMU lights on helmets (EMU 1,EMU 2)
9. Disconnect helmets from Airlock EMUs, temp stow
10. Remove comm caps from LTA Restraint Bags and connect to electrical harnesses
11. Install helmets (not reqd if proceeding directly to EMU Checkout)
12. Remove LTA Restraint Bags
13. Disconnect waist rings; remove and stow any equipment stowed in HUT/LTA
14. Stow LTA Restraint Bags on AAPs
15. √Thermal cover clear of waist ring
16. Waist ring – engage posn
17. Connect LTA to HUT, lock
18. Remove 20-g Crash Bag from middeck EMU, as reqd

EMU CHECKOUT PREP (30 min)

AW18A
1. LTG FLOOD (four) – ON
2. Remove Airlock Floor Bag from airlock (as reqd)
3. Unbuckle SCU straps, Velcro SCU to wall
4. Disconnect helmets from airlock EMUs, temp stow
5. √DIDB Restraint Bags installed

EMUs
6. Remove comm caps, s/n 1198 (Wh1) and s/n 1189 (Sg1) from LTA restraint bag pouches (leave Wh2 in pouch)
7. Connect comm caps to electrical harnesses
8. Remove LTA Restraint Bags (reference LTA Restraint Strap Removal, next page, as reqd)
9. Disconnect waist rings
10. Remove/temp stow ECOKs, LCVGs (NOTE: LCVGs will be used during EMU Checkout)

Wh ECOK
11. Retrieve/temp stow mesh bags labeled "EMU SYSTEMS TRANSFER BAG" with "A" or "B" designators and "EVA TOOLS TRANSFER BAG" (NOTE: "Spare" mesh bags available in Sg ECOK as reqd for transfer)

Vol H
12. Unstow:
    - EMU Servicing Kit (s/n 5004) – (tagged for transfer to ISS)
    - EMU Equipment Bag Crew Specific Compartments (2)
    - EMU Equipment Bag Shared Compartment
13. Stow in "EMU SYSTEMS TRANSFER BAG":
    - EMU Servicing Kit (s/n 5004)
    - EMU Equipment Bag Crew Specific Compartments (2)
14. Temp stow "EMU SYSTEMS TRANSFER BAGS A & B" for use in EMU PREP FOR TRANSFER TO ISS

MDK wall
15. Install EMU Equipment Bag Shared compartment for use in EMU Checkout
16. Stow LTA Restraint Bags on AAPs (rolled up on lower AAP cross bar as reqd)
17. √Thermal cover clear of waist ring
18. Waist ring – engage posn
19. Connect LTA to HUT, lock

LTA RESTRAINT STRAP REMOVAL (15 min)

NOTE

May be performed on EMU 1 and 2 simultaneously.
Perform steps as reqd for current EMU config

1. As reqd, remove comm cap from LTA Restraint Bag; temp stow
2. Remove EMU from AAP
3. Disconnect all restraint attachments from SAFER mount brackets (two)
4. Loosen cinch strap mechanism, remove SAFER mount brackets
5. Remove strap from PLSS
6. Stow strap in LTA Restraint Bag Pouch with D-rings (three) connected
7. Engage EMU in AAP
8. Stow LTA Restraint Bag/strap

LTA RESTRAINT STRAP INSTALLATION (15 min)

NOTE

May be performed on EMU 1 and 2 simultaneously. Perform steps as reqd for current EMU config. Procedure written to install in Launch/Landing config shown below

1. Unstow LTA Restraint Bag/strap
2. Remove EMU from AAP
3. Install SAFER mount brackets (two)
4. Install elastic band of strap around SOP
5. Tighten cinch strap mechanism
6. Attach strap French hooks (two) to SAFER mount brackets
7. Engage EMU in AAP
8. Stow LTA, suit arms inside LTA Restraint Bag
9. Connect upper spring hooks (two) over suit shoulders to upper AAP attachment rings (two)
10. Connect lower spring hooks (two) around suit arms to SAFER mount brackets (two)
11. Tighten all LTA bag straps with bag as high as possible on EMU

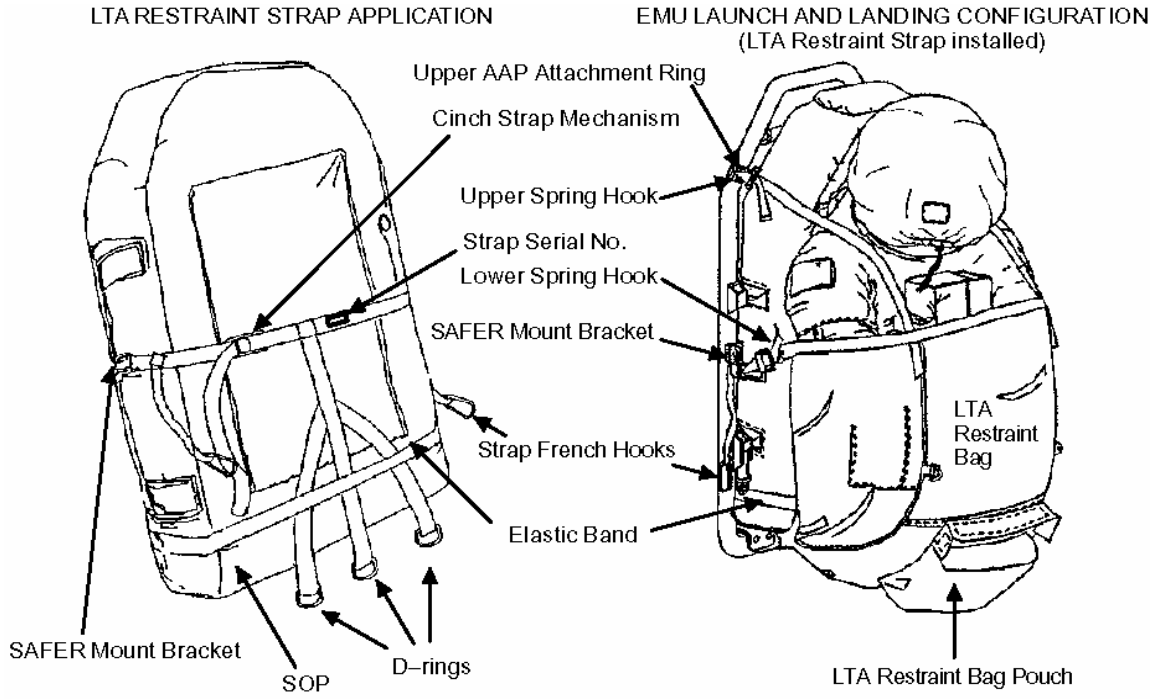

NOTE

French hooks should be attached to SAFER mount brackets for launch and landing

EMU PREP FOR TRANSFER TO ISS (90 min)

EMU PACK-UP (45 min)

BOTH EMUs 1. √PWR – SCU

DCM 2. √DCM PURGE vlv – op (up)

3. √WATER – OFF, switch guard installed

4. √O2 ACT – OFF

5. √Helmet sun visors down, cover installed

6. Configure/verify items stowed in the table below

EMU 3017 (M) (Wh)	**EMU 3015 (L) (Sg)**
☐ Helmet (with cover) ☐ Valsalva ☐ Wrist Mirror (2) ☐ CCA (Wh1) ☐ Gloves (Wh1) ☐ EMU Battery (s/n 2065) ☐ LiOH Cartridge (record _____) ☐ LTA (Wh) ☐ LTA Restraint Strap and Bag (on AAP) ☐ EV1 Crew ID stripes ☐ Mission patch and flag	☐ Helmet (with cover) ☐ Valsalva ☐ Fresnel Lens ☐ Wrist Mirror (2) ☐ CCA (Sg1) ☐ Gloves (Sg1) ☐ EMU Battery (s/n 2066) ☐ LiOH Cartridge (record _____) ☐ LTA (Sg) ☐ LTA Restraint Strap and Bag (on AAP) ☐ EV2 Crew ID stripes ☐ Mission patch and flag
Inside EMU (Wh)	**Inside EMU (Sg)**
☐ LCVG w/biomed (Wh1) (s/n 3195) ☐ Wh EMU Crew Options Kit (ECOK) ☐ Wh EVA #1 Ziplock Bag ☐☐☐ 2 MAGs ☐☐☐ TCUs (top, bottom) ☐☐☐ Sock Liners ☐☐☐ Comfort Gloves ☐☐☐ Wristlets ☐☐☐ 2 Ziplock Bags ☐☐☐ Mole Skin ☐ Wh EVA #2 Ziplock Bag (same as Wh EVA #1 plus crew patch) ☐ Wh EVA #3 Ziplock Bag (same as Wh EVA #1 plus crew patch) ☐ Spare mesh bags	☐ LCVG w/biomed (Sg1) (s/n 3159) ☐ Sg EMU Crew Options Kit (ECOK) ☐ Sg EVA #1 Ziplock Bag ☐☐ 2 MAGs ☐☐ TCUs (top, bottom) ☐☐ Sock Liners ☐☐ Comfort Gloves ☐☐ Wristlets ☐☐ 2 Ziplock Bags ☐☐ Mole Skin ☐☐ Croakie ☐ Sg EVA #2 Ziplock Bag (same as Sg EVA #1 plus crew patch) ☐ Spare mesh bag

7. Stow LTA, suit arms inside LTA Restraint Bag
8. Connect upper spring hooks (two) over suit shoulders to upper AAP attachment rings (two). (Reference LTA Restraint Strap Installation for diagrams, TEMP FS 2-6, as needed)
9. Connect lower spring hooks (two) around suit arms to SAFER mount brackets (two)
10. Tighten all LTA bag straps with bag as high as possible on EMU
11. Retrieve EMU Systems Transfer Bags and EVA Tools Transfer Bag (were temp stowed earlier)
12. Gather items and pack EMU Systems Transfer Bags and EVA Tools Transfer Bag per table below

EMU SYSTEMS TRANSFER BAGS A & B

Vol H – Previously gathered
- ☐ EMU Servicing Kit (s/n 5004, for Xfer to ISS)
- ☐ EMU Equipment Bag Crew Specific Compartments (2)

5 MLE Bag G
- Lv EMU Crew Options Kit (ECOK)
- ☐ Lv EVA #3 Ziplock Bag
  - ☐ 4 MAGs
  - ☐ TCUs (top, bottom)
  - ☐ Sock Liners
  - ☐ Comfort Gloves
  - ☐ Wristlets
  - ☐ EV3 Crew ID stripes
  - ☐ Mission patch and flag
  - ☐ Mole Skin
- ☐ Lv2 gloves (s/n 6208)

5 MLE Bag C
- ☐ Lv LCVG w/biomed (s/n 3157)
- ☐ Lv1 gloves (s/n 6223)
- ☐ Wh2 gloves (s/n 6209)
- ☐ Sg2 gloves (s/n 6214)
- ☐ DIDBs (6) (Transfer List will handle the Ziplock w/4 DIDBs)

MF28H – Drug Subpack
- ☐ Aspirin

FDF/SODF Shared Locker (Forward Locker)
- ☐ Ziplock bag labeled “EVA Procedures/Cue Cards”
  - ☐ <u>STS-122 CONSUMABLES TRACKING CUE CARD</u> (1 of 1)
  - ☐ <u>STS-122 EMERGENCY UNDOCKING EVA TRANSFERS CUE CARD</u> (1 of 1)
  - ☐ STS-122 EVA Checklists (1 of 2)
  - ☐ STS-122 ISS EVA Systems Checklists (1 of 2)

EMU SYSTEMS TRANSFER BAGS A & B (Cont)

- ☐ Ziplock bag labeled “ISS EVA Cuff Checklists”
  - ☐ STS-122 ISS EVA Cuff Checklists (3 of 3)

Crew Cabin
- ☐ Crew personal items for campout

WCS
- ☐ Towels and Hygiene Items

EVA TOOLS TRANSFER BAG

5 MLE Bag C
- ☐ MLI for Trunnion Scuff Plates and Pins (4)
- ☐ MLI for Keel Pin
- ☐ Adjustable Tethers (4)
- ☐ NTA QD Booties (2)
- ☐ 85-ft SafetyTethers (2) s/n 1009 and s/n 1010
- ☐ Ballstacks (3)
- ☐ Wire Ties, short (52)
- ☐ 7/16" Ratcheting Box End Wrench
- ☐ PDGF Cables (2) (pack on top)

13. Report to MCC-H when complete with EVA PREP FOR TRANSFER TO ISS

POST-DOCKING EVA TRANSFER/RECONFIG (55 min)

NOTE
This procedure assumes that transfer items were reconfigured per EMU PREP FOR TRANSFER TO ISS procedure

EMU/TOOL TRANSFER TO ISS (30 min)

1. Transfer following EMU and EVA equipment to ISS per table below:

Item	Destination	Transfer Status
STS-122 EVA Hardware		
EMU 3017 (Wh)	E-Lk aft EDDA (Perform steps 2-8 below to install EMU in EDDA)	
EMU 3015 (Sg)	E-Lk fwd EDDA (Perform steps 2-8 below to install EMU in EDDA)	
EMU Systems Transfer Bags A & B	E-Lk	
Wh ECOK	E-Lk	
Sg ECOK	E-Lk	
EVA Tools Transfer Bag	E-Lk	
OTSD (remove from foam)	E-Lk	

PRE-EVA 1 EMU CONFIGURATION

2. Remove LTA Restraint Bags
3. Disconnect all restraint attachments from SAFER mount brackets (two)
4. Loosen cinch strap mechanisms, remove SAFER mount brackets
5. Remove straps from PLSS
6. Stow strap in LTA Restraint Bag Pouch
7. Engage EMUs in EDDA (Wh aft, Sg fwd)
8. Roll up and stow LTA Restraint Bags/straps in ECOKs
9. Report transfer status to MCC

CAUTION
Do NOT install METOX in the Airlock CO2 Removal Box at this point in the timeline

EVA Sys Transfer Bags

10. Unstow the following items and position in E-Lk for Campout:
    - ☐ STS-122 CONSUMABLES TRACKING CUE CARD
    - ☐ STS-122 EMERGENCY UNDOCKING EVA TRANSFERS CUE CARD
    - ☐ STS-122 EVA Checklist
    - ☐ STS-122 ISS EVA Checklist

ECOK

- ☐ Crew Preference/Personal Items in Crew Specific Compartments (place compartments on ISS EMU Equipment Bag)
- ☐ Towels and Hygiene Items

E-Lk
EV1, EV2/3 bags

11. Locate and verify each bag contains the items in the list below. (Bag contents to be used for EVA 1; use as required for subsequent EVAs for battery stowage; reference STS-122 CONSUMABLES TRACKING CUE CARD for serial numbers)
    - ☐☐ Helmet Light Batteries (2)
    - ☐☐ PGT Battery (1) – loose in bag or with PGT
    - ☐☐ PGT
    - ☐☐ REBA Battery (1)
    - ☐☐ Metox Canister (to be used for campout)

12. Verify Old ISS EMU Servicing Kit (s/n 5002) is attached to E-Lk wall

C-Lk

13. Verify following tool items in airlock prior to campout/tool config
    - ☐ NTA Crewlock Bag
    - ☐ PDGF Crewlock Bag
    - ☐ MWSs w/pre-gather items
    - ☐ OTSD
    - ☐ Contingency Crewlock Bag
    - ☐ EVA Tools Transfer Bag

LV EMU RECONFIGURATION AND SWAP (30 min)

EMU 3018 RECONFIG FOR LOVE (20 min)

1. On Sg EMU 3015: Remove EMU Battery (stow in M-02 bag)
   Remove EMU TV and Helmet Lights from Sg EMU 3015 and temp stow
   Remove Sg EMU from FWD EDDA and temp stow in Node
2. Install EMU (temp stowed in Node, s/n 3018, M, Lv) in FWD EDDA then install previously temp stowed EMU TV and helmet lights
3. Retrieve Lv EMU gloves Lv1 (s/n 6223) from EVA Systems Transfer Bag; install on arms, lock
4. Retrieve STS-122 ISS EVA Cuff Checklist from EMU Systems Transfer Bag and install on left arm
5. √Wrist mirrors installed
6. Retrieve STS-122 mission patch, EV3 (broken) ID stripes, USA flag from Lv ECOK and install on PLSS and LTA
7. Verify cam configurations per STS-122 NOMINAL EMU SIZING MATRIX (EMU CONT PROCS)
8. Rotate EDDA open
9. Unzip PLSS thermal cover and Velcro to top
10. √REBA installed per STS-122 CONSUMABLES TRACKING CUE CARD
11. Verify REBA connected to power harness with pull test (upper left-hand corner, P1-J1 connector)
12. √All latches locked, zip thermal cover closed
13. Install/replace valsalva (as reqd)
14. Reconfig ISS EMU Equipment Bag Crew Specific Compartment (1 of 2) with items from Lv ECOK:
    - ☐ Comfort Gloves ☐ Sock Liners ☐ Mole Skin
    - ☐ Wristlets ☐ TCUs

LV HEATED GLOVE CHECKOUT (10 min)

EMU 3018

15. √REBA sw – OFF (toward left arm of suit)
16. √Upper arm connections mated (located under TMG covering; unzip shoulder TMG as reqd for access, then reconfigure)
17. √Glove heater sw – OFF
18. Connect lower arm pwr harness to gloves (remove Kapton as reqd)

NOTE

To avoid excessive battery consumption and heat buildup, deactivate heaters once heat detected at fingertips

19. REBA sw – ON, pull tab toward right arm of suit
20. Glove heater sw (one per glove) – ON

When heat detected on all outside fingertips:

21. Glove heater sw (one per glove) – OFF
22. REBA sw – OFF, pull tab toward left arm of suit
23. Disconnect lower arm pwr harness from gloves
24. Stow lower arm and glove pwr harness connectors under TMG

25. As comm permits, report completion of EMU reconfig to MCC-H

POST EVA EMU RECONFIGURATION AND TRANSFER (120 min)

EMU RECONFIGURATION FOR TRANSFER

- ☐ 1. Install helmet cover on FWD EDDA ISS EMU 3018 (Lv)
- ☐ 2. Remove ISS EMU 3018 (Lv) from FWD EDDA and temp stow in Node
- Node ☐ 3. Move EMU 3015 (Sg) to E-Lk
- E-Lk ☐ 4. Install Sg EMU in FWD EDDA

For Shuttle EMUs 3017 (Wh) and 3015 (Sg):

- DCMs ☐ 5. √sw POWER – SCU
- EMUs ☐ 6. Unzip PLSS thermal covers
- ☐ 7. Remove Metox canisters and stow in Expended Metox (M-02)
- ☐ 8. Remove EMU Battery from Wh EMU and stow in M-02
- ☐ 9. Install EMU Batteries (s/n 2038, 2077) into Wh and Sg EMUs, respectively
- ☐10. Install expended LiOH (s/n recorded in Transfer to ISS) (silver label facing out) into Wh and Sg EMUs, respectively
- ☐11. √EMU Battery and LiOH latches locked
- ☐12. √sw (pulltabs) REBA (two) – OFF
- ☐13. Disconnect EMU Power Harness (P1) from REBA (J1) (upper left-hand corner of REBA as it sits in PLSS REBA pouch)
- ☐14. Remove REBAs from EMUs (NOTE: unbutton and unzip TMG)
- ☐15. Install REBA J1 fabric cover
- ☐16. Stow REBAs in M-02 bag
- ☐17. Stow EMU Power Harness (P1) connector in TMG pocket
- ☐18. Close, zip, and button PLSS thermal covers
- ☐19. Remove helmet lights and EMU TV from Wh EMU; temp stow for later install on ISS EMU
- ☐20. √No tools or tethers installed on Shuttle EMUs
- EMUs ☐21. Remove Sg Helmet; temp stow
- ☐22. Disconnect comm caps from electrical harness; temp stow in ECOKs
- ☐23. Reinstall Helmets (lock), helmet covers
- ☐24. Remove STS-122 Cuff Checklists from Sg/Wh EMUs; stow in EMU Equipment Bag shared compartment (staying on ISS)
- E-Lk ☐25. Remove LTA Restraint Straps and Restraint Bags from Wh and Sg ECOK; temp stow
- ☐26. Verify Wh and Sg ECOKs contain, at most, items listed in table 1 (some items may be in clothes hamper; all STS-122 ECOK items should return to ground)

TABLE 1.- Wh AND Sg ECOK CONTENTS

EMU Crew Options Kit (Wh)	**EMU Crew Options Kit (Sg)**
☐ ECOK Mesh Bag	☐ ECOK Mesh Bag
☐ Wh EVA #1 Ziplock Bag	☐ Sg EVA #1 Ziplock Bag
☐ 2 Ziplock Bags	☐ 2 Ziplock Bags
☐ Wh EVA #2 and EVA #3 Ziplock Bag (same as Wh EVA #1)	☐ Sg EVA #2 Ziplock Bag (same as Sg EVA #1)

POST EVA EMU RECONFIGURATION AND TRANSFER (120 min) (Cont)

To swap Sg LTA for returning ISS LTA s/n 007:

E-Lk ☐27. Remove LTA from Sg EMU 3015; temp stow in Node

Node ☐28. Remove LTA from ISS EMU 3008; confirm s/n 007 (black sharpied on bladder inside waist)

☐29. Install Sg LTA on ISS EMU 3008

☐30. Temp stow returning ISS LTA in E-Lk

E-Lk ☐31. Stow Wh ECOK and Wh1 LCVG in EMU 3017 and Sg1 ECOK and Sg LCVG in EMU 3015 HUTs

Wh EMU ☐32. Connect Wh LTA to HUT

Sg EMU ☐33. Connect returning ISS LTA to HUT

☐34. Verify final configuration of both EMUs per lists below (NOTE: **Bolded** s/n are items that are different from launch config):

EMU 3017 (Wh) FINAL RETURN CONFIG	EMU 3015 (Sg) FINAL RETURN CONFIG
☐ EMU 3017 – M	☐ EMU 3015 – L
☐ EMU Battery **(ISS s/n 2038)**	☐ EMU Battery **(ISS s/n 2077)**
☐ LiOH	☐ LiOH
☐ Gloves (Wh1)	☐ Gloves (Sg1)
☐ Wh ECOK	☐ Sg ECOK
☐ LCVG (Wh1)	☐ LCVG (Sg1)
☐ LTA (Wh)	☐ LTA **(ISS s/n 007**)
☐ Patches, Stripes, Flag	☐ Patches, Stripes, Flag
☐ Wrist Mirrors (2)	☐ Wrist Mirrors (2)
☐ Helmet	☐ Helmet
☐ Helmet cover installed	☐ Helmet cover installed
☐ O2 ACT – OFF	☐ O2 ACT – OFF
☐ PWR – SCU	☐ PWR – SCU
☐ DCM Purge vlv – Op (up)	☐ DCM Purge vlv – Op (up)
☐ WATER – OFF	☐ WATER – OFF
☐ WATER Switch Guard installed	☐ WATER Switch Guard installed
☐ 1 Adj Tether (s/n 1080-1085 ok)	☐ 1 Adj Tether (s/n 1080-1085 ok)
☐ 1 Ret Equip Tether (Black s/n 4057 or 4070 ok)	☐ 1 Ret Equip Tether (Black s/n 4057 or 4070 ok)
☐ No addl Tethers/Tools	☐ No addl Tethers/Tools
☐ No EMU TV, Helmet Lights, or REBA	☐ No EMU TV, Helmet Lights, or REBA

EMUs ☐35. Remove Shuttle EMUs from EDDAs

☐36. Install LTA Restraint Strap and Restraint Bag. (Reference LTA Restraint Strap Installation for diagrams as needed)

☐37. In Wh LTA Restraint Bag pouch:
Stow prime Wh CCA (Wh1)
√Wh2 also in pouch

☐38. In Sg LTA Restraint Bag pouch:
Stow prime Sg CCA (Sg1)

☐39. Temp stow EMU 3017 and EMU 3015 in Node (will be transferred to shuttle middeck at end of this procedure)

Cont next page

POST EVA EMU RECONFIGURATION AND TRANSFER (120 min) (Cont)

EMU SYSTEMS TRANSFER BAG RECONFIGURATION FOR TRANSFER

☐40. Reconfigure the following hardware per table 2 below. (Use spare mesh bag located in Sg ECOK as reqd):

TABLE 2.- EMU & TOOL TRANSFER ITEMS

ITEM #	ITEM	CURRENT LOCATION	DESTINATION	STATUS
1	New EMU Servicing Kit (s/n 5004, Xfer to ISS)	EMU Systems Transfer Bags	EVA Prep and Ops M-02 bag (s/n 1038)	
2	ISS Return EMU Servicing Kit (s/n 5002) with only one signal conditioner (see next line item)	E-Lk Wall or EVA Prep and Ops M-02 bag	EMU Systems Transfer Bag	
3	Signal Conditioner s/n 124 (leave in kit)	ISS Return EMU Servicing Kit s/n 5002	EMU Systems Transfer Bag	
4	CCA s/n 1165 (Sg2)	ISS EVA Pregather Items 1	EMU Systems Transfer Bag	
5	3 ISS Cuff Checklists	ISS EVA Pregather Items 1	EMU Systems Transfer Bag	
6	Crew Specific Compartments (2)	E-Lk Wall	EMU Systems Transfer Bag	

ISS EMU CONFIG FOR UNDOCK

For ISS EMU 3008, and EMU 3018 (formerly Lv's EMU):

Node ☐41. Retrieve and install ISS EMUs 3008 and 3018 in aft and fwd EDDAs, respectively

E-Lk ☐42. Install helmet lights and EMU TV on 3008 (3018 should already have them)

☐43. Remove following items from EMU 3018; stow in EMU Systems Transfer Bag for return to Shuttle:

- ☐ EMU Gloves (2) (s/n 6223) (Install covers on lower arms)
- ☐ Mission Patch, Flag, EV Crew Identifier Stripes (1 set)

☐44. Remove STS-122 Cuff Checklist and stow in EMU Equipment Bag Shared compartment with previously stowed cuffs (will have 3 total STS-122 cuffs remaining on ISS)

☐45. Configure/verify final contents of EMU Systems Transfer Bag(s) and EVA Tools Transfer Bags per table 3 below. Report any additional or missing hardware to MCC

TABLE 3.- EVA BAGS RETURN CONFIGURATION

EMU SYSTEMS TRANSFER BAGS A & B

- ☐ Aspirin (if any left over after EVAs)
- ☐ STS-122 CONSUMABLES TRACKING CUE CARD (1)
- ☐ STS-122 EMERGENCY UNDOCKING EVA TRANSFERS CUE CARD (1)
- ☐ STS-122 EVA Checklist (1)
- ☐ STS 122 ISS EVA Systems Checklist (1)
- ☐ ISS Cuff Checklists (3)
- ☐ Return EMU Servicing Kit (s/n 5002) (1) with following signal conditioner only:
  - ☐ Signal Conditioner (s/n 124)
- ☐ STS EMU Equipment Bag Crew Specific Compartments (2)
- ☐ CCA (s/n 1165) Sg2
- ☐ Mission Patch, Flag, EV Crew Identifier Stripes (1 set)
- ☐ Lv ECOK
- ☐ Lv1 LCVG w/biomed

NOTE

The following glove s/n will vary based on EVA use

- ☐ EMU Gloves (pair) s/n 6223 (Lv1)
- ☐ EMU Gloves (pair) s/n 6208 (Lv2)
- ☐ EMU Gloves (pair) s/n 6209 (Wh2)
- ☐ EMU Gloves (pair) s/n 6214 (Sg2)

EVA TOOLS TRANSFER BAG(s)

- ☐ 85-ft Safety Tethers (2) s/n 1009 and s/n 1010
- ☐ AdjustableTethers (4) s/n 1080-1085 ok
- ☐ P400 and P401 connector caps (2)
- ☐ Ret Equip Tether (Lg-sm from CMG)
- ☐ Velcro/Tape Caddy s/n 1007
- ☐ 7/16" Ratcheting Box End Wrench
- ☐ OIH Bag
- ☐ CBM Seal Covers (8)

TRANSFER AND TEMP STOW TO SHUTTLE

☐46. Transfer items in table 4 to Shuttle

TABLE 4.- TRANSFER TO SHUTTLE

Item	Destination	Transfer Status
EMU 3017(M) with ECOK	Temp stow Middeck	
EMU 3015 (L) with ECOK	Temp stow Middeck	
EMU Systems Transfer Bags A & B	Temp stow Middeck	
EVA Tools Transfer Bag(s)	Temp stow Middeck	

POST EVA EMU RECONFIGURATION AND TRANSFER (120 min) (Cont)

EVA UNPACK AND STOW (15 min)

☐47. Unpack and stow items from EMU Systems Transfer Bag and EVA Tools Transfer Bag per table 5 and table 6 below; report status to MCC when complete

TABLE 5.- EMU SYSTEMS TRANSFER BAG UNPACK AND STOW

Current Location	Item	Final Stowage Location	Status
EMU Systems Transfer Bag	Aspirin	Drug subpack (Forward Locker)	
–	STS-122 CONSUMABLES TRACKING CUE CARD	FDF/SODF Locker (Forward Locker)	
–	STS-122 EVA Checklists (1)	FDF/SODF Locker (Forward Locker)	
–	STS-122 ISS EVA Systems Checklists (1)	FDF/SODF Locker (Forward Locker)	
–	ISS Cuff Checklists (3)	FDF/SODF Locker (Forward Locker)	
–	Return EMU Servicing Kit (s/n 5002)	Volume H Inboard	
–	STS EMU Equipment Bag Crew Specific Compartments (2)	Volume H Outboard	
–	CCA s/n 1165	Sg LTA restraint pouch	
–	Mission Patch, Flag, EV Crew Identifier Stripes (1 set)	Lv ECOK in 5 MLE Bag C	
–	Lv ECOK	5 MLE Bag G	
–	Lv1 LCVG w/biomed	5 MLE Bag C	
–	EMU Gloves (pair) s/n 6223 (Lv1)	5 MLE Bag C	
–	EMU Gloves (pair) s/n 6209 (Wh2)	5 MLE Bag C	
–	EMU Gloves (pair) s/n 6214 (Sg2)	5 MLE Bag C	
–	EMU Gloves (pair) s/n 6208 (Lv2)	5 MLE Bag G	
	Empty EVA Systems Transfer Bag(s)	Lv ECOK in 5 MLE Bag C	

TABLE 6.- EVA TOOLS TRANSFER BAG UNPACK AND STOW

Current Location	Item	Final Stowage Location	Status
EVA Tools Transfer Bag	85-ft Safety Tethers (2)	5 MLE Bag C	
–	Adjustable Tethers (4)	5 MLE Bag C	
–	Ret Equip Tether (lg-sm from CMG)	TBD	
–	P400 and P401 Connector Caps	TBD	
–	Velcro/Tape Caddy	TBD	
–	7/16" Ratcheting Box End Wrench	5 MLE Bag C	
–	OIH Bag	TBD	
–	CBM Seal Covers (8)	TBD	
–	Empty EVA Tools Transfer Bag	Lv ECOK in 5 MLE Bag G	

STS-122 (1E) EVA PLAN ..... FS 7-2
EVA 1
EVA 1 BRIEFING CARD ..... FS 7-3
EVA 1 TOOL CONFIG ..... FS 7-5
EVA 1 INHIBIT PAD ..... FS 7-7
EVA 1 NOTES, CAUTIONS, AND WARNINGS ..... FS 7-9
EVA 1 SUMMARY TIMELINE ..... FS 7-13
EVA 1 EGRESS ..... FS 7-14
PDGF SETUP ..... FS 7-15
PDGF INSTALL ..... FS 7-23
P1 NTA REMOVAL PREP ..... FS 7-30
CLEANUP AND A/L INGRESS ..... FS 7-35
GET-AHEAD TASK: OTSD STOW ..... FS 7-36
EVA 2
EVA 2 BRIEFING CARD ..... FS 7-38
EVA 2 TOOL CONFIG ..... FS 7-40
EVA 2 INHIBIT PAD ..... FS 7-42
EVA 2 NOTES, CAUTIONS, AND WARNINGS ..... FS 7-44
EVA 2 SUMMARY TIMELINE ..... FS 7-48
EVA 2 EGRESS ..... FS 7-49
NTA REMOVE FROM PLB ..... FS 7-50
P1 NTA INSTALL ..... FS 7-53
NTA STOW IN PLB ..... FS 7-59
SSPTS CABLE ROUTING ..... FS 7-62
CLEANUP AND A/L INGRESS ..... FS 7-70
EVA 3
EVA 3 BRIEFING CARD ..... FS 7-71
EVA 3 TOOL CONFIG ..... FS 7-73
EVA 3 INHIBIT PAD ..... FS 7-75
EVA 3 NOTES, CAUTIONS, AND WARNINGS ..... FS 7-77
EVA 3 SUMMARY TIMELINE ..... FS 7-81
EVA 3 EGRESS ..... FS 7-82
SOLAR TRANSFER ..... FS 7-83
CMG TRANSFER ..... FS 7-89
EuTEF TRANSFER ..... FS 7-95
CLEANUP AND A/L INGRESS ..... FS 7-100
COLUMBUS OUTFITTING ..... FS 7-101
GET-AHEADS
LAB MMOD SHIELD CLEANUP ..... FS 7-104
NODE MMOD SHIELD CLEANUP ..... FS 7-107

STS-122 (1E) EVA PLAN

MT: WS7
SSRMS: Node 2 PDGF

EVA 1 (06:30) FD4 (Col Prep, P1 NTA Removal Prep) EV1: Walheim EV2: Schlegel IV: Poindexter

Post Depress/ Egress (00:20)	PDGF Setup (01:40)	PDGF Install (02:30/02:45)	P1 NTA Removal Prep (01:30/01:15)	Cleanup/ Ingress/ Pre Repress (00:30)
	Open Node 2 stbd CBCS Flap **Demate LTA cable**/Set up SSRMS Prep MDPS panels/Retrieve PDGF from sidewall carrier Remove CBM Seal Covers/Maneuver to Col PDGF	Install PDGF Reinstall MDPS panels **Remove CBM seal covers/**Maneuver to ICC Translate to Airlock	Configure MUT EE Ballstacks/ Demate N2 Lines Break Torque on NTA bolts Demate Electricals/OTSD Stow (get-ahead)	

^ SSRMS @ PLB ^ MNVR to Col PDGF ^ MNVR to ICC ^ -SSRMS Grapple/MNVR to Col Install-^

MT: WS7
SSRMS: Node 2 PDGF

EVA 2 (06:30) FD6 (P1 NTA R&R, SSPTS) EV1: Walheim EV2: Schlegel IV: Poindexter

PD/Eg (00:20)	P1 NTA Removal from PLB (01:40)	P1 NTA Install (01:55)	NTA Stow in PLB (00:50)	SSPTS Routing (01:10)	Cleanup/ Ingress/ Pre Repress 00:35
	Release NTA from PLB Maneuver NTA to P1/**Install Col Trunnion Covers**	Remove old P1 NTA Install new P1 NTA Maneuver old NTA to PLB		**Install Col Trunnion Covers** Route and Mate SSPTS cables	

^ SSRMS @ PLB ^MNVR to P1 ^-- MNVR to PLB

MT: WS7
SSRMS: Node 2 PDGF

EVA 3 (06:30) FD8 (SOLAR Transfer, CMG Transfer, EuTEF Transfer) EV1: Walheim EV3: Love IV: Poindexter

Post Depress/ Egress (00:20)	Solar Transfer (02:40)	CMG Transfer (01:15)	EuTEF Transfer (01:35)	Cleanup/ Ingress/ Pre Repress (00:40)
	Release SOLAR from PLB Maneuver to EPF/**Install Col WIFs and Handrails** Install SOLAR **Install Keel Pin Cover** Maneuver to ESP-2	Engage Adj Shims Release CMG and Mnvr to PLB Install CMG in PLB	Release EuTEF from PLB Maneuver to EPF/**Install Col Handrails** Install EuTEF	

^ SSRMS @ PLB ^ --MNVR to EPF, then Keel---^ ^ MNVR to ESP 2^ ^ MNVR to PLB^ ^ - MNVR to EPF-^

0:00 1:00 2:00 3:00 4:00 5:00 6:00

EVA 1 BRIEFING CARD

EV1 _____
EV2 _____
IV _____
R1/M1 _____

EVA Prep start (GMT) ____/____ ____:____ ____
Depress to 10.2 ____ ____:____ ____
Start Purge ____ ____:____ ____
PET 00:00 ____ ____:____ ____

Flight Day Prior to EVA – General Briefing (All)

1. EVA Prep
   - ❑ Get-up Plan – clothing and EMU equipment bag – EV1
   - ❑ Prebreathe protocol review (Notes and Warnings) – IV
   - ❑ Equipment lock activities – IV responsibilities
   - ❑ Suit donning plan – special requests – EV's, IV's
   - ❑ SAFER, MWS, tools, C-Lk positions, bag stowage – EV2
   - ❑ Airlock depress review – IV

2. EV Crew Procedure Review – EV1
   - ❑ Egress Plan
   - ❑ Order of tasks (summary timeline)
   - ❑ Translation plan, fairleads, and tether swaps
   - ❑ Hazards
   - ❑ Ingress Plan

3. Robotics – R1/M1
   - ❑ SRMS/SSRMS initial position, maneuvers, clearances
   - ❑ Coordinate Frames
   - ❑ SRMS/SSRMS comm protocol review – expected calls, use first names
   - ❑ GCA – when, where, handover language
   - ❑ Cameras
   - ❑ Contingencies
     - Suit anomalies while ingressed

Flight Day Prior to EVA – Additional Briefing (EV, IV)

4. Communications – CDR, IV
   - ❑ Overall setup: big loop, A/G2, S/G2, ICOM, Hardline, remind EV crew when mode swapping
   - ❑ EV/IV comm protocol review – Use EV1(2) for DCM sw throws (all time in A/L), use first names otherwise

5. General Procedure Review – EV1
   - ❑ Get ahead tasks
   - ❑ Constraints – ground and flight – IV
   - ❑ Notes, Cautions, and Warnings review – IV
   - ❑ Contingency procedures – crib sheet

6. Emergencies Review – EV1
   - ❑ Emergency suit doff and power down during EVA prep
   - ❑ Loss of comm
   - ❑ EMU malfunctions
   - ❑ Lost tools
   - ❑ Lost crewmember
   - ❑ DCS
   - ❑ Abort and Terminate scenarios, protocols
   - ❑ Hand signal reviews

7. Post EVA – IV's
   - ❑ Suit doffing responsibilities
   - ❑ Post EVA plan

√Expedited Suit Doffing cue card pre-positioned for EVA day

EVA 1 BRIEFING CARD (Cont)

EVA Day, prior to Prebreathe Protocol

1. Reminders
   - ❑ Translate slow (then space is like water). Relax grip
     - o Be extra careful on non-standard routes or orientations
     - o Don't hop
   - ❑ Tether Discipline
     - o Check all gates closed and hooks locked; check reel locked/ unlocked
     - o Local tether when stopped. Check tethers before you leave
     - o When something is attached to a tether, don't grab the tether by the hook
     - o Good pull tests
   - ❑ APFR ops
   - ❑ Be disciplined when tired
   - ❑ Hazards: payloads, etc
   - ❑ Openness: when you have boot or glove pain let us know
   - ❑ OK for IV and ground to check on us. If you need update, ask
   - ❑ Monitor safety tether. Hold peanut when necessary
   - ❑ Let mistakes pass
   - ❑ If you get a mal, read the caution and warning message so everyone knows what it is
   - ❑ Manage frustration (slow down, if needed)
   - ❑ Cold soak before ingress
   - ❑ Verify PGT settings. PGT collars are easy to bump
   - ❑ Read turns, torque, green light
   - ❑ SSRMS: coordinate frames and positive GCA handovers
   - ❑ Review first post-egress steps
   - ❑ Review abort/terminate priorities and procedures
   - ❑ Glove Checks
   - ❑ Day/night reconfigurations
   - ❑ Translation Adaptation plan

IV Checklist Verification Items

1. Generic
   - ❑ Day/Night Cycles
     - • √Lights, visors, gloves and heaters, tethers, and MWS
   - ❑ √Load Alleviating Strap on Safety Tethers not damaged
     - • Crew report: "**Safety Tether strap looks good**"
   - ❑ √Safety Tether Crew Hook Slidelocks are locked
     - • Crew Report: "**Locked and locked**"
   - ❑ √Both SAFER valves down at egress
     - • Crew Report: "**Both handles down**"
   - ❑ √APFR locking collar Black-on-black and pull test
     - • Crew Report: "**Black-on-black, good pull test**"
   - ❑ √PGT Green light on for bolt engage
     - • May get Lo Torque msg at bolt release
     - • Crew Report: "**XX turns, green light, XX ft-lb"**
   - ❑ √Latches closed on lid, door, etc (i.e., √in landing config)
     - • Crew Report: "**XX Latches done**"
   - ❑ √Connectors for no bent pins, no FOD, inhibits in place
     - • Crew Report: "**Pins good, no FOD, bend radius OK**"
     - • Crew Report: "**Are inhibits in place?**"

2. Task Specific
   - ❑ √Tethers and Tools clear prior to SSRMS ORU movement
     - • Each EV report: "**Tethers and tools clear**"

3. Tool inventory
   - ❑ √Tethers on MWS
   - ❑ Confirm all others as standard unless removed

EVA 1 TOOL CONFIG

Pre-EVA Tool Configuration

AIRLOCK

- ☐ Staging Bag
  - ☐ Fish stringer (2)
    - ☐ Connector Cleaner Tool Kit
    - ☐ Wire Tie Caddy
    - ☐ Spare PGT (s/n_____)
      - ☐ PGT Battery (s/n_____)
    - ☐ Connector Pin Straightener
    - ☐ MWS Key Strap - wiretie to fish str
    - ☐ Velcro/tape caddy
    - ☐ Spare Safety Tether (55-ft)
    - ☐ Pry Bar
    - ☐ Probe
- ☐ IV Bag
  - ☐ Contamination Detection Kit
    - ☐ Gold Salt Coupon (6)
    - ☐ Color Chart (2)
    - ☐ ISS Contamination Sampler (2)
    - ☐ Shuttle Contamination Sampler (2)
    - ☐ Ammonia Draeger Tube (12)
  - ☐ Mesh Bag
    - ☐ Towels (2)
  - ☐ DCM Plug (2) (SAFER hard mount)
  - ☐ GP Caddy (2)
    - ☐ Thermal Mittens (2 pr)
  - ☐ Socket Caddy
    - ☐ 1/2 x 8-in socket (IV Hatch)
    - ☐ 7/16 x 6-in socket (backup)
- ☐ D-ring extender on D-ring

- -

- ☐ Crewlock Bag – PDGF tools
  - ☐ Ret equip tether (1 lg-eq next to HR) – Airlock
  - ☐ Adj equip tether – exterior, bag restraint
  - ☐ Large Trash Bag (for CBM Covers) – on integral ret
    - ☐ Ret equipment tether (lg-eq)
    - ☐ Adj equip tether
  - ☐ Large Trash Bag (for CBM Covers) – on integral ret
    - ☐ Ret equipment tether (lg-eq)
    - ☐ Adj equip tether

(Cont)

EV1

- ☐ MWS
  - ☐ Right swing arm
    - ☐ PGT (s/n _____, batt s/n_____)
      - ☐ 6-Ext 7/16 √PGT settings
      - ☐ Ret equip tether (eq-eq; ret box @ PGT)
  - ☐ T-Bar
    - ☐ Wire ties (2)
    - ☐ Small EVA trash bag
      - ☐ Wire Tie
      - ☐ T-handle tools (2 short, 1 long)
      - ☐ Ret equip tethers (3) to one side
  - ☐ Ret equip tether (eq-eq)
    - ☐ Ret equip tether (eq-eq) w/PIP pin
    - ☐ Adj equip tether
  - ☐ BRT
    - ☐ Wire ties (2)
    - ☐ Ret equip tether (eq-eq)
    - ☐ Adj equip tether
- ☐ D-ring extender (2)
- ☐ Waist tether (to L – D-ring Extender)
- ☐ Spare safety tether (R-85-ft) sn _____
- ☐ A/L safety tether (L-85-ft) sn _____
- ☐ SAFER

EV2

- ☐ MWS
  - ☐ Right swing arm
    - ☐ PGT (s/n _____, batt s/n _____)
      - ☐ 6-Ext 7/16 √PGT settings
      - ☐ Ret equip tether (sm-sm; ret box @ PGT)
  - ☐ T-Bar
    - ☐ Wire ties (2)
    - ☐ Small EVA trash bag
      - ☐ Wire Tie
    - ☐ Ret equip tether w/PIP pin
    - ☐ WIF Adapter
      - ☐ Ret equip tether (eq-eq)
    - ☐ Ret equip tether (eq-eq)
    - ☐ Adj equip tether (2)
  - ☐ BRT
    - ☐ Wire ties (2)
    - ☐ Ret equip tether (eq-eq)
- ☐ D-ring extender (2)
- ☐ Waist tether (to L – D-ring Extender)
- ☐ Spare safety tether (L-85-ft) sn _____
- ☐ A/L safety tether (L-85-ft) sn _____

(Cont)

Post-EVA Tool Configuration

AIRLOCK

- ☐ Staging Bag
  - ☐ Fish stringer
    - ☐ Connector Cleaner Tool Kit
    - ☐ Wire Tie Caddy
    - ☐ Spare PGT
      - ☐ PGT Battery
    - ☐ Connector Pin Straightener
    - ☐ MWS Key Strap
    - ☐ Velcro/Tape Caddy
    - ☐ Spare Safety Tether
    - ☐ Pry Bar
    - ☐ Probe
- ☐ IV Bag
  - ☐ Contamination Detection Kit
    - ☐ Gold Salt Coupon (6)
    - ☐ Color Chart (2)
    - ☐ ISS Contamination Sampler (2)
    - ☐ Shuttle Contamination Sampler (2)
    - ☐ Ammonia Draeger Tube (12)
  - ☐ Mesh Bag
    - ☐ Towels (2)
  - ☐ DCM Plug (2) (SAFER hard mount)
  - ☐ GP Caddy (2)
    - ☐ Thermal Mittens (2 pr)
  - ☐ Socket Caddy
    - ☐ 1/2 x 8-in socket (IV Hatch)
    - ☐ 7/16 x 6-in socket (backup)
- ☐ D-ring extender on D-ring

- -

- ☐ Crewlock Bag – NTA tools
  - ☐ Ret equip tether (1 lg-eq) – Airlock
  - ☐ Adj equip tethers (1) – ext
    - ☐ Round Torque Multiplier
      - ☐ TM socket – round 5/8, proud
  - ☐ Socket Caddy
    - ☐ 7.8-ext 5/8 socket
    - ☐ Ret equip tether
  - ☐ Ret equip tether (Lg-eq)

(Cont)

EV1

- ☐ MWS
  - ☐ Right swing arm
    - ☐ PGT (No socket)
      - ☐ Ret equip tether (eq-eq)
  - ☐ T-Bar
    - ☐ Wire ties (2)
    - ☐ Small EVA trash bag
      - ☐ Wire Tie
    - ☐ Ret equip tether (eq-eq)
    - ☐ Ret equip tether (eq-eq) w/PIP
    - ☐ Adj equip tether
  - ☐ BRT
    - ☐ Wire ties (2)
    - ☐ Ret equip tether (eq-eq)
    - ☐ Adj equip tether
- ☐ Waist tether
- ☐ D-ring extender (2)
- ☐ SAFER

EV2

- ☐ MWS
  - ☐ Right swing arm
    - ☐ PGT
      - ☐ 6-Ext 7/16 socket
      - ☐ Ret equip tether (eq-eq)
  - ☐ T-Bar
    - ☐ Wire ties (2)
    - ☐ Small EVA trash bag
      - ☐ Wire Tie
    - ☐ Ret equip tether w/PIP pin
    - ☐ J400, J401 Connector caps (2)
      - ☐ Ret equip tether (eq-eq)
      - ☐ Ret equip tether (eq-eq)
      - ☐ Adj equip tether (2)
  - ☐ BRT
    - ☐ Wire ties (2)
    - ☐ Ret Equip tether (eq-eq)
- ☐ Waist tether
- ☐ D-ring extender (2)
- ☐ SAFER

EVA 1 TOOL CONFIG (Cont)

AIRLOCK (Cont)

- ☐ Crewlock Bag – PDGF tools (continued)
- ☐ P400/P401PDGF Cables (2, on integral rets)
- ☐ √IV caps removed; discard
- ☐ √Bagging removed
- ☐ Wire Ties (2) – cable bundling
- ☐ Ret equip tethers (2, bail to wire tie)
- ☐ Adj equip tether (CBM fairlead)
- ☐ Socket Caddy
- ☐ 12-Ext 7/16 socket
- ☐ Ret equip tether
- ☐ 7/16" box end wrench
- ☐ Ret equip tether

- ☐ OTSD
- ☐ Ret equip tether (lg-eq)

- ☐ Fish stringer
- ☐ Digital camera and bracket (morning of EVA)
- ☐ QD Booty
- ☐ QD Booty
- ☐ Crewlock Bag – NTA tools
- ☐ Adj equip tethers (1) – ext
- ☐ Round Torque Multiplier
- ☐ TM socket – round 5/8, proud
- ☐ MUT EE-Ballstack
- ☐ Adj equip tethers (2)
- ☐ MUT EE-Ballstack
- ☐ Adj equip tethers (2)
- ☐ MUT EE
- ☐ Socket Caddy
- ☐ 7.8-ext 5/8 rigid socket
- ☐ Ret equip tether (eq-eq)

- ☐ Contingency Tools crewlock bag – endcone
- ☐ Socket Caddy
- ☐ 7.8-Ext 5/8 rigid socket
- ☐ 2-ext 7/16th rigid socket
- ☐ RAD s/n _____
- ☐ Waist tether
- ☐ TPS Scraper
- ☐ EVA Ratchet
- ☐ Vise Grips
- ☐ Ret (eq-eq)

EV2 (Cont)

- ☐ Spare safety tether (R-55-ft) s/n _____
- ☐ SAFER

Prior to EVA:

- Inspect small trash bag bristles for damage or deformation
- Inspect RET cords for damage
- Inspect safety tether and waist tether load alleviating straps

ISS Configuration Notes:

- MT @ WS7 w/2 CETA carts to STBD side
- SSRMS on Node 2 PDGF

AIRLOCK

- ☐ Fish stringer
- ☐ Digital camera and bracket
- ☐ Lg Trash Bag – CBM Seal Covers
- ☐ Ret Equip Tether (lg-eq) – Airlock
- ☐ Adj Equip Tether on bag
- ☐ CBM Seal covers (4)
- ☐ Lg Trash Bag – CBM Seal Covers
- ☐ Ret Equip Tether (lg-eq) – Airlock
- ☐ Adj Equip Tether on bag
- ☐ CBM Seal covers (4)
- ☐ Crewlock Bag – PDGF Tools
- ☐ Adj equip tether (2)
- ☐ Ret equip tether (5) – interior
- ☐ T-handle Tools (2 short, 1 long)
- ☐ Ret equip tether (4)
- ☐ 7/16" box end wrench
- ☐ Socket Caddy
- ☐ 12-Ext 7/16 socket
- ☐ 6-Ext 7/16 socket
- ☐ Airlock safety tether (85-ft)
- ☐ Airlock safety tether (85-ft)

- ☐ Contingency Tools crewlock bag – endcone
- ☐ Socket Caddy
- ☐ 7.8-Ext 5/8 rigid socket
- ☐ 2-ext 7/16th rigid socket
- ☐ RAD s/n _____
- ☐ Waist tether
- ☐ TPS Scraper
- ☐ EVA Ratchet
- ☐ Vise Grips
- ☐ Ret (eq-eq)

Ret/Adj Type	Usage	Availability
Ret eq-eq (-381)	16	18 (16+2)
Ret eq-eq w/PIP (-383)	2	4
Ret Lg-eq (-385)	4	8
Adjustable	13	15 (9+6)

EVA 1 INHIBIT PAD

Orbiter (1)

ALL EVAs

TCS

L12 1. √TCS POWER – OFF

KU-BAND ANTENNA (NOTE: KU-BAND STOWED FOR EVA 1)

MCC-H 1. √KU-BAND Mask – active
2. √KU-BAND EVA Protect Box – active

RCS

If EV crew < 27 ft from FRCS
IV 1. √DAP: VERN, FREE, LO Z (flt specific check with GNC)
O14,15,16 2. √RJDF F1, F2, F3, F4 MANF DRIVER (four) – OFF
LOGIC (four) – OFF
MCC-H 3. √Above RCS config
IV 4. √RCS F – ITEM 1 EXEC (*)
√JET DES F1U – ITEM 17 (*)
F3U – ITEM 19 (*)
F2U – ITEM 21 (*)

S-BAND ANTENNAS

NOTE
Possible loss of comm when forced LL FWD antenna

IV If EV crew < 1.6 ft from S-Band antenna
A1R 1. S-BAND FM ANT – XMIT LOWER/RCVR UPPER
2. √MCC, lower antenna selected
If no comm, or on MCC GO
C3 3. S-BAND PM ANT – LL FWD
When EVA crewmember at least 1.6 ft away from all S-Band upper antennas
C3 4. S-BAND PM ANT – GPC

Ground

ALL EVAs

GROUND RADAR

MCC-H 1. √TOPO console, ground radar restrictions in place for EVA

USOS (1)

ALL EVAs

PCU

NOTE
PCUs may require up to 1 hr warm-up period before they are operational

MCC-H 1. √PCUs (two) operational in discharge mode and one of the following:
a. CCS PCU EVA hazard control enabled
b. No more than two arrays unshunted
c. No more than two arrays pointed < 105º from velocity vector

OR

2. One or no PCUs operational in discharge mode and one of the following:
a. No more than two arrays unshunted
b. No more than two arrays pointed < 105º from velocity vector

LOCATION DEPENDENT INHIBITS

LAB WINDOW (Translation to Payload bay)

IV Verify LAB window shutter – close

KU-BAND (SGANT) ANTENNA

MCC-H If EV crew < 3.3 ft from KU-BAND antenna
1. Park KU-BAND:
1.1 Pointing Mode – Inhibit
1.2 PLC – Reset
1.3 Autotrack Continuous Retry – Inhibit

Cont next page

EVA 1 INHIBIT PAD (Cont)

USOS (2)

LOCATION DEPENDENT INHIBITS

S-BAND (SASA) ANTENNAS

MCC-H If EV crew < 3.6 ft from S1 SASA [P1 SASA]
1. P1 SASA (S1 SASA) – Active
2. S1 SASA [P1 SASA] – Powered down

SARJ

MCC-H If EV crew working within 2 ft or outboard of SARJ:
1. √DLA (1) – LOCKED
2. All motor setpoints set to zero
3. All motors deselected

OR

4. Both DLAs – LOCKED

TRRJ (P1 NTA Removal Prep)

MCC-H When EV crew working within 2 ft of P1(S1) TRRJ rotation envelope:
1. √DLA (1) – LOCKED
2. √Other DLA (1) – ENGAGED

UNGROUNDED CONNECTORS (Translation to Payload Bay)

MCC-H Verify SSPTS deactivated:
1. √RPCM LA2A3B_D RPC 1 – Open, Close Cmd Inhibit
   LA1A4A_D RPC 3 – Open, Close Cmd Inhibit
   Z13B_A RPC 2 – Open, Close Cmd Inhibit
   Z14B_A RPC 2 – Open, Close Cmd Inhibit

RSOS (1)

ALL EVAs

SM Antennas

IV
1. GTS – Deactivate
2. ARISS (Ham Radio) – Deactivate or VHF (144-146 MHz) TX only

EVA 1 NOTES, CAUTIONS, AND WARNINGS

NOTES

1. Bolt install: report torque and turns
2. Bolt release: report torque and turns if different from published range
3. EVA connectors: after disconnection and prior to connection; verify pin and EMI band integrity; verify connector free of FOD
4. Inspect QDs for damage prior to mating
5. Toolbox doors must be closed with one latch per door when EV crew not in immediate vicinity
6. Avoid contact with OBSS striker bars (Vitrolube coating)

CAUTION

ISS Constraints

A. Avoid inadvertent contact with
   1. Grapple fixture shafts (drylube)
   2. PIP pins
   3. EVA Crane [PMA1]
   4. TCS Reflectors [PMA2, PMA3]
   5. APAS hardware [PMA2, PMA3]
   6. CETA Lights (Z-93 paint) [LAB, S1, Node 1]
   7. Deployed MISSEs (currently none)
   8. Passive UMAs
   9. MBS VDU, MCU, CRPCMs, and Cameras (taped radiative surfaces, silver Teflon)
   10. Deployed TUS cable
   11. S0 aft face Radiator
   12. GPS Antennas (S13 paint) [S0]
   13. UHF Antennas [LAB, P1]
   14. ETCS Radiator flexhoses and panels [S1, P1]
   15. EETCS/PV Radiator flexhoses, bellows and panels [P6, P4, S4, S6]
   16. SASA RF Group [Z1, S1, P1]
   17. Heat pipe radiators [Z1]
   18. PCU cathode and HCA ports [Z1]
   19. Ku-Band Antenna (SGANT) dish [Z1]
   20. CMG cover/shells [Z1]
   21. SSRMS Cameras
   22. Open CBM petal covers and LAB window shutter

CAUTION (Cont)

ISS Constraints (Cont)

B. Electrical cables
   1. Avoid bend radii < 10 times cable diameter

C. Fiber optic cables
   1. Avoid bend radii < 10 times cable diameter
   2. Avoid pulling on cable during mate/demate

D. Fluid line flex hoses and QDs
   1. Avoid bend radii < 5 in for hoses with diameter < 1 in on LAB, S0, S1, P1, and 10-in for hoses with diameter < 1-in on all other elements
   2. Avoid bend radii < 14 in for hoses with a diameter ≥ 1 in
   3. Additional care should be taken to not exceed bend radii when applying loads at the flexible hose to rigid tube stub interfaces
   4. Ensure fluid QD booties are fully closed prior to leaving worksite; wire tie if reqd

E. For structural reasons
   1. Avoid vigorous body motions, quick grabs and kickoffs against tether restraints
   2. Avoid performing shaking motions (sinusoidal functions) more than four cycles
   3. Avoid kicking S1/P1 radiator beam. If any of these occur, wait 2 to 5 min to allow structural response to dissipate

EVA 1 NOTES, CAUTIONS, AND WARNINGS (Cont)

CAUTION (Cont)

ISS Constraints (Cont)

F. Other
1. ITT Cannon connector: On demated connectors, do not rotate collar or manipulate cable/connector using collar or connector tool
2. WIS Antennas: do not use as handholds [Node 1, Lab, P6, Z1]
3. Lubricant from Ku-Band SGANT gimbals [Z1], CMGs [Z1], and RTAS Ground Strap fasteners [P6, P4, S4, S6] can contaminate EMU
4. MLI handholds are not rated for crewmember translation loads
5. CBM petal covers may not be used as handholds unless both launch restraint pins are engaged
6. Prevent inadvertent contact of the tether shuttle with ETRS when the P3/S3 Tether Shuttle Stop is raised away from the rail

CAUTION (Cont)

Shuttle Constraints

G. Avoid inadvertent contact with
1. OBSS and SRMS Composite Sections and Cable Harnesses
2. LCS (silver Teflon) and LDRI (silver Teflon) and ITVC (gold foil) [OBSS]
3. WVS Antenna [ODS Truss & PLB Sill]
4. Payload Bay wire harnesses, cables, and connectors

H. No touch
1. LDRI diffuser [OBSS]
2. OBSS saddle contacts (when OBSS unberthed) [OBSS]
3. Monkey fur [PLB]
4. Cameras: metallic surfaces [PLB]
5. Ku-Band Antenna black dish and gold thermal blankets [PLB]

EVA 1 NOTES, CAUTIONS, AND WARNINGS (Cont)

WARNING

ISS Constraints

A. Avoid inadvertent contact with
1. Grapple fixture targets and target pins
2. SSU, ECU, beta gimbal platform, mast canister, SAW blanket boxes unless the beta gimbal is locked and the motor is turned off
3. Stay inboard of SARJ when active
4. Stay 2 ft from S1/P1 radiator beam rotational envelope when beam is free to rotate
5. Stay 5 ft from moving MT on face 1

B. Handrails
1. Handrails previously used for MISSE attachment may not be used as a safety tether point [A/L endcone 564 & 566, A/L Tank 2 nad/fwd & port/fwd, P6 5389]

C. Pinch
1. NZGL connector linkage. Use caution when mating/locking
2. ITT Cannon Connector rotating housing
3. EV side of IV Hatch during Hatch operation (also snag hazard) [A/L]
4. LAB window shutter and CBM petal cover linkages during operation

D. QDs
1. If QD is in FID when valve is opened (bail fwd), QD will leak and fluid line may whip
2. Do not rotate if in mated/valve open config

WARNING

ISS Constraints (Cont)

E. RF radiation exposure
1. Stay 3.6 ft from S-Band (SASA) high gain Antenna when powered [S1, P1]
2. Stay 1.3 ft from S-Band (SASA) low gain Antenna when powered [S1, P1]
3. Stay 1 ft from UHF Antenna when powered [LAB, P1]

F. Sharp Edges
1. Inner edges of WIF sockets
2. Mating surfaces of EVA connectors. Avoid side loads during connector mating
3. Back side of MMOD shield fasteners
4. Spring loaded captive EVA fasteners (e.g., 6B-boxes, BMRRM, RTAS); the end of the spring may protrude
5. PMA umbilical launch restraints-exposed bolt threads
6. Adjustable Fuse Tether (Fish Stringer) buckles stowed in Node Bag
7. Nickel coated braided copper Ground Straps may contain frayed wires [P6, P4, S4, S6]
8. Z1 handrail 6061 by the Ku-Band boom launch restraint [Z1]
9. Solar Array Blanket Box [P6, S6]
10. Keep hands away from SSRMS LEE opening, and snares
11. Fastener threads on back of Z1 U-jumper male FQD panel, if nutplate cap missing

WARNING (Cont)

ISS Constraints (Cont)

G. Thermal
1. EVA connectors with booties may become hot if left uncovered. Handling may need to be limited
2. PMA handrails may be hot. Handling may need to be limited
3. Turn off glove heaters when comfortable temp reached to prevent bladder damage. Do not pull fingers out of gloves when heaters are on
4. Uncovered trunnion pins may be hot
5. SSRMS/MBS operating Cameras and lights may radiate large amounts of heat
6. Stay at least 1 ft away from PMAs and MMOD shields > 270 degF if EMU sun visor up
7. Stay at least 1 ft away for no more than 15 min from PMAs and MMOD shields > 300 degF if EMU sun visor up
8. Stay at least 0.5 ft away from PMA and MMOD shields > 325 degF
9. Do not touch EMU protective visor if temp has been < -134 for >15 min
10. No EMU TMG contact with PMAs and MMOD shields > 320 degF
11. No EMU boot contact with foot restraint when temp < -120 degF or > 200 degF

WARNING (Cont)

Shuttle Constraints

H. Arcing/Molten Debris
1. Stay ≥ 2 ft from exposed EFGF connector when OBSS berthed, powered, and EFGF not grappled [PLB]
2. Stay ≥ 2 ft from exposed Stbd Fwd MPM contacts [PLB]

I. Pinch
1. PRLA operation [PLB]

J. RF radiation exposure
1. Stay 3.28 ft from S-Band Antenna when powered
2. Stay 1 ft from top and side of UHF PLB Antenna radome surface when in high powered mode [ODS truss]
3. Stay 0.33 ft from top and side of UHF PLB Antenna radome surface when in low powered mode [ODS truss]
4. Remain below the level of the PLB door mold line for first 20 in aft of Fwd bulkhead when S-Band Antenna powered [PLB]
5. Remain on the inboard side of the Stbd slidewire (sill handrails if slidewire not installed) for first 20 ft aft of Fwd bulkhead when Ku-Band Antenna powered [PLB]

WARNING (Cont)

Shuttle Constraints (Cont)

K. Sharp Edges
1. PRLA grounding wipers [PLB]
2. LDRI baffles (Also an entrapment hazard) [OBSS]
3. Keep hands away from SRMS EE opening and snares

L. Thermal
1. Illuminated PLB lights; do not touch
2. OBSS grapple fixture shafts/cams may be hot. Limit handling if required
3. Stay 27 ft from PRCS when powered
4. Stay 3 ft from VRCS when powered
5. Stay 3 ft from APU when operating

M. Contamination
1. Stay out of the immediate vicinity of leaking jet or APU

N. Lasers
1. Do not look at LDRI diffuser or LCS laser aperture window

EVA 1 SUMMARY TIMELINE

TASK TIME (PET TIME) HR : MIN	IV/SSRMS	EV1 (FF)	EV2 (SSRMS)
00:00 --	SSRMS: At APFR Install Posn	POST DEPRESS (00:05)	POST DEPRESS (00:05)
		EGRESS (00:15)	EGRESS (00:15)
	IV: APCU 1, 2 Deact	PDGF SETUP (01:40) ❑ Open Node 2 STBD CBCS flap ❑ Translate to PLB; temp stow PDGF Bag ❑ Disconnect LTA Heater cable P01	PDGF SETUP (01:40) ❑ Translate to PLB (retrieve APFR); set up SSRMS
01:00 --	IV: APCU 2 Activation	❑ Remove upper MDPS panel; release lower bolts on lower panel	
	SSRMS: Mnvr to PDGF Lower Bolt Posn	❑ Remove CBM Seal Covers	❑ GCA to PDGF sidewall carrier ❑ Release PDGF
	SSRMS: Mnvr to PDGF Install Posn	❑ Retrieve PDGF cables, 12 in socket and caddy	❑ Maneuver to COL
02:00 --	SSRMS: GCA for PDGF and panel install	PDGF INSTALL (02:30) ❑ Assist with PDGF EDFs ❑ Remove lower MDPS panel ❑ Engage PDGF horseshoe connectors P7, P8	PDGF INSTALL (02:45) ❑ Install PDGF; engage EDFs ❑ Remove lower MDPS panel ❑ GCA to upper debris panel; reposition and install bolts
03:00 --	SSRMS: Mnvr to APFR Egress Posn	❑ Preposition lower panel for install ❑ Install lower debris panel ❑ Stow tools in bag; retrieve Lg trash bag ❑ Remove CBM Seal Covers	❑ GCA to P400/P401 connectors; mate ❑ Install lower debris panel ❑ Maneuver to ICC for egress ❑ GCA for egress; remove APFR
04:00 --	SSRMS: Mnvr to COL Pre-Grapple Posn	❑ Retrieve PDGF bag; translate to Airlock	❑ Retrieve Lg trash bag; stow APFR; translate to Airlock
05:00 --		P1 NTA REMOVAL PREP (01:30) ❑ Stow Lg trash bag; retrieve NTA Bag, MBM, MB ❑ Translate to P1 NTA; stow MBM, MB on CETA cart ❑ Retrieve TM ❑ Break Torque on NTA bolts ❑ Demate NTA electricals J1,J2,J3 ❑ Translate to Airlock	P1 NTA REMOVAL PREP (01:15) ❑ Stow Lg trash bag; retrieve QD booties ❑ Translate to P1 ❑ Disconnect NTA N2 Lines, install booties ❑ Translate to Airlock ❑ Stow OTSD in S0 WIF 7 (get-ahead)
06:00 --		CLEAN UP and A/L INGRESS (00:25)	CLEAN UP and A/L INGRESS (00:25)
	EVA Time 06:30	PRE REPRESS (00:05)	PRE REPRESS (00:05)

EVA 1 EGRESS (00:15)

IV/SSRMS	EV1	EV2
	Initial Config: Left waist tether on Airlock D-ring extender. Spare 85-ft safety tether on right D-ring extender. Airlock tether on left D-ring extender EGRESS (00:15) 1. Thermal cover – open 2. Egress Airlock 3. Attach airlock safety tether (left D-ring ext) to fwd A/L tether point • √Anchor hook locked 4. Verify safety tether load strap hook slide lock – L • √Safety tether reel unlocked 5. Receive fish stringer w/camera, booties, and NTA bag from EV2 6. Install fish stringer from airlock HRs 0550 to 0554 (stbd end) 7. Receive PDGF crewlock bag from EV2 8. Stow PDGF bag on BRT 9. Receive EV2 airlock safety tether anchor hook; attach EV2 anchor hook to aft A/L tether point • √Anchor hook locked 10. Receive left waist tether; stow 11. Translate fwd to clear path for EV2 egress 12. Check EV2 tether and SAFER config • √SAFER MAN ISOL vlv – Open (dn) • √SAFER HCM – Closed (dn)	Initial Config: Left waist tether on fwd UIA tether point. Spare 85-ft safety tether on left D-ring extender. SSRMS 55-ft safety tether on right D-ring extender. Airlock tether on left D-ring extender EGRESS (00:15) 1. Transfer fish stringer w/camera, booties, and NTA bag to EV1 (loaded end first) 2. Transfer PDGF crewlock bag to EV1 3. Transfer airlock safety tether anchor hook to EV1 4. Verify safety tether load strap hook slide lock – L • √Safety tether reel unlocked 5. Release EV1 waist tether; transfer to EV1 6. Retrieve waist tether; stow 7. Extend bag ret to A/L D-ring extender 8. Egress Airlock 9. Check EV1 tether and SAFER config • √SAFER MAN ISOL vlv – Open (dn) • √SAFER HCM – Closed (dn) 10. Close thermal cover 11. Perform translation adaptation (as reqd)
IV: After egress, perform: WVS Software: Select page – RF camera Select “Advanced Controls” S-Band Level (two) – Max		

PDGF SETUP (01:40)

IV/SSRMS	EV1	EV2
Initial config: SSRMS: At PLB APFR install location	SETUP (00:15) 1. Translate to Node 2 (STBD route) • Poorman's fairlead ESP-2 stbd edge 2. Perform safety tether swap onto Node 2 HR 0332 • Verify load strap hook slide lock – L • √Safety tether reel unlocked • √Anchor hook locked	SETUP (01:10) 1. Translate to Lab WIF 4 APFR 2. Config APFR **[__, PP, A, 6]** 3. Retrieve APFR; stow on BRT 4. Translate to Node 2 HR 0305 (nadir route) 5. Perform safety tether swap (use spare 85-ft) • Verify load strap hook slide lock – L • √Safety tether reel unlocked • √Anchor hook locked
	WARNING Avoid contact with grapple fixture shaft and target pin	
	CAUTION Avoid contact with ESA payload hardware above the FRAM	
1. SSRMS: GCA for APFR install 2. IV: Verify EV1 clearance to CBM petals 3. SSRMS: GCA for Ingress position	3. Translate to Node 2 STBD CBM 4. Translate along center disk cover edge for access to flap (feet first from zenith) 5. Release flap fastener; rotate flap toward zenith to open 6. Open Velcro cover; secure flap to Velcro 7. Inspect CBM sealing surface for FOD (WVS survey ☞) 8. Translate to PLB (fairlead at PLB fwd, stbd side) 9. Translate under ICC to keep safety tether line clear of EuTEF 10. Temp stow PDGF bag on top, stbd side of ICC (aft of EuTEF) 11. Inspect gloves; status MCC on RTV and Vectran state	6. Translate to the PLB (fairlead at PLB fwd, port to keep line clear of SSRMS) 7. GCA SSRMS for APFR install 8. Install WIF adapter (tether pt toward LEE) 9. Install hitch pin in adapter PIP pin 10. Install, configure APFR **[12, PP, A, 6]** • Verify locking collar blk-on-blk • Perform pull test 11. Perform safety tether swap onto SSRMS (use spare 55-ft) • Verify load strap hook slide lock – L • √Safety tether reel unlocked • √Anchor hook locked 12. Temp stow Node 2 safety tether on port sill (keep sidewall carrier clear) 13. Attach waist tether to APFR 14. GCA SSRMS for ingress 15. Ingress APFR

PDGF SETUP (01:40) (Cont)

IV/SSRMS	EV1	EV2
4. IV: Deactivate APCUs for LTA cable disconnect; (NOTE: APCU 2 deact also removes keep alive power from OBSS LCS and LDRI) L12 (SSP1) APCU 1,2 CONV (two) – OFF (tb-bp) OUTPUT RLY (two) – OPEN (tb-bp)	LTA HEATER CABLE DISCONNECT (00:10) 12. Translate to ECSH; retrieve LTA connector cap 13. Translate to LTA cable connector 14. BRT to HR 0916 15. On IV GO: demate LTA Heater cable connector from Columbus ❑ LTA P01 from COL J01 16. Inspect COL connector receptacle for FOD or damage 17. Install connector cap on COL J01 18. Release LTA cable from COL TA clamp; close clamp 19. Translate to ECSH; undo Velcro straps 20. Stow cable on ECSH LTA Cable Bracket 21. Inspect and mate LTA P01 to stowage bracket dummy connector; secure Velcro	16. Inspect gloves; status MCC on RTV and Vectran state
5. IV: After LTA cable stow on ECSH, reapply APCU 2 power for OBSS L12 (SSP1) APCU 2 OUTPUT RLY – CL CONV – ON (tb-gray)	MDPS PANEL REMOVAL (00:45) 22. Pre-stage ret from COL HR 924 to HR 901 (zenith standoff) 23. Pre-stage ret with both ends on COL HR 0902 24. Hold sill for access to aft MDPS bolts 25. **PGT [B2 (16 ft-lb), CCW2, 30.5] 6-Ext 7/16** Release MDPS bolts, ~9 turns ❑ Bolt 4 Upper panel ❑ Bolt 4 Lower panel	PDGF RETRIEVE (00:30) 17. Clean up MWS; secure tethers and tools
6. SSRMS: GCA for horseshoe connectors	26. Install T-handle in aft receptacle on lower panel (COL/1-11) (loop facing aft) 27. Install T-handle tool in lower panel fwd receptacle 28. **PGT [B2 (16 ft-lb), CCW2, 30.5] 6-Ext 7/16** Release MDPS bolt, ~9 turns ❑ Bolt 1 Lower panel	18. GCA SSRMS for horseshoe connector bolts 19. Open horseshoe connector MLI • Lift cover flap and pull back chin strap • Release Velcro; pull cover to side 20. **PGT [A7 (9.2 ft-lb), CCW2, 30.5] 6-Ext 7/16** Release horseshoe connector bolts (2), 20-26 turns to free spin, yellow band visible ❑ Horseshoe receptacle P6/P8 ❑ Horseshoe receptacle P7/P5
7. SSRMS: GCA for PDGF release	29. Translate to upper panel aft (COL/01-12) 30. **PGT [B2 (16 ft-lb), CCW2, 30.5] 6-Ext 7/16** Release MDPS bolt, ~9 turns ❑ Bolt 3 Upper panel	21. GCA SSRMS for PDGF release 22. RET to PDGF

PDGF SETUP (01:40) (Cont)

IV/SSRMS	EV1	EV2
8. SSRMS: Mnvr to COL for PDGF install 9. SSRMS: GCA for PDGF install	31. Route RET from panel HR 905 aft standoff to HR 906 fwd standoff 32. **PGT [B2 (16 ft-lb), CCW2, 30.5] 6-Ext 7/16** Release MDPS bolt, ~9 turns ❑ Bolt 1 Upper panel 33. Install T-handle tool w/RET on upper panel fwd socket 34. Route RET from T-handle tool to HR 0913 stbd standoff 35. BRT to HR 0903 36. **PGT [B2 (16 ft-lb), CCW2, 30.5] 6-Ext 7/16** Release MDPS bolt, ~9 turns ❑ Bolt 2 Upper panel 37. Remove and re-position upper panel If time available, begin CBM Seal Cover setup and removal CBM SEAL COVER REMOVAL (00:30) CAUTION Avoid touching the CBM seals after the covers have been removed 38. Retrieve CBM seal bag (Lg trash bag) with RET 39. Translate to COL CBM; fairlead safety tether line clear of CBM seals, if reqd 40. Temp stow bag on zenith, port endcone of COL HR 916 41. Remove 4 Port/nadir covers ❑ MWS EE to HR 927 ❑ Remove nadir stbd cover; stow ❑ Waist tether to HR 926 ❑ Remove nadir port cover; stow ❑ Remove 2 port covers; stow	NOTE Verify EDF has at least 1 lanyard intact before release. Avoid turning EDF more than 5 turns 23. **PGT [B7 (25.5 ft-lb), CCW2, 30.5] 6-Ext 7/16** Release EDF bolts (4), 4-6 turns ❑ Fwd, lower ❑ Aft, lower ❑ Fwd, upper (GCA SSRMS) ❑ Aft, upper 24. Ensure all 4 EDFs fully retracted; remove PDGF from sidewall carrier 25. Give IV GO for SSRMS mnvr to COL for PDGF install (~20 min) 26. GCA SSRMS into position for PDGF install

PDGF SETUP (01:40) (Cont)

IV/SSRMS	EV1	EV2
10. IV: Record WVS video of CBM Seals	42. After 4 covers removed, secure bag by wrapping adj tether around bag, if reqd 43. Temp stow bag for EV2 retrieval 44. Inspect CBM seals for FOD, report to MCC 45. WVS survey of CBM seals 46. Retrieve 12-Ext 7/16 socket w/caddy from PDGF bag; stow on MWS	

PDGF SETUP – TASK DATA SHEET

Estimated Task Duration:

	With SSRMS	Without SSRMS
One EV Crew	N/A	N/A
Two EV Crew	01:40	N/A

Tools:

EV1	EV2
• PGT 6-Ext 7/16 • T-handle Tools (3) • RET • BRT • Large trash bags (2)	• PGT 6-Ext 7/16 • RET

EVA Fasteners:

Fastener Name	Head Size	Qty	Install Torque (ft-lb)	Release Torque (ft-lb)	Failure Torque (ft-lb)	Turns
MDPS bolt	7/16	8	3.6-5.8	11.1	22	9 (KSC)
PDGF EDF	7/16	4	10 init 25.8 fin	25.8	143.3	4-6
PDGF horseshoe connector bolt	7/16	2	7.5-10	10	14.6	20-26

EVA Connectors:

Harness	To	Clamps (#)	Conn Size	Function
LTA Heater Cable P01	COL J01	1	TBD	Power

Connector Inhibits:

Task	Inhibit
LTA Heater Cable Demate	L12 (SSP1) APCU 1,2 CONV (two) – OFF (tb-bp) OUTPUT RLY (two) – OPEN (tb-bp) AND SSRMS LEE umbilicals not mated to COL PDGF

Foot Restraints:

Task	WIF	Setting
PDGF retrieve and install	SSRMS	12, PP, A, 6

ORU Identification:

ORU	Part number	Serial Number
Col PDGF	51618-1000-1	TBD

ORU mass: 72 lbs

Notes:
1. Verify EDF has at least 1 lanyard intact before release
2. Avoid turning EDF more than 5 turns during release. The EVA nut can be released from the EDF core causing it to free spin
3. MDPS panel bolts took ~9 turns at KSC (1819 bolt data specifies 4 turns)

Cautions:
1. Avoid contact w/ESA payload hardware above the FRAM
2. Avoid touching the CBM seals after covers have been removed

Warnings:
1. Avoid contact with grapple fixture shaft and target pin
2. Verify electrical inhibits in place prior to LTA cable demate
3. LTA connector does not meet kickloads when mated

PDGF SETUP – TASK DATA SHEET (Cont)

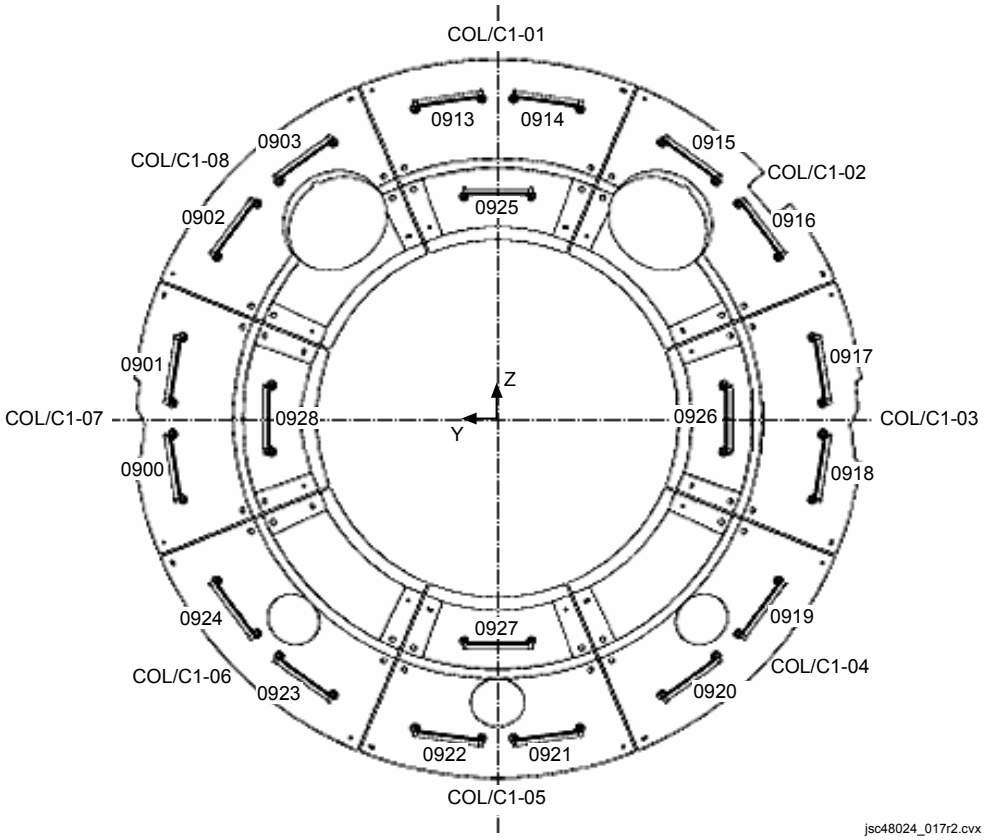

Columbus Fwd Endcone (Fwd in PLB, Port on ISS)

PDGF SETUP – TASK DATA SHEET (Cont)

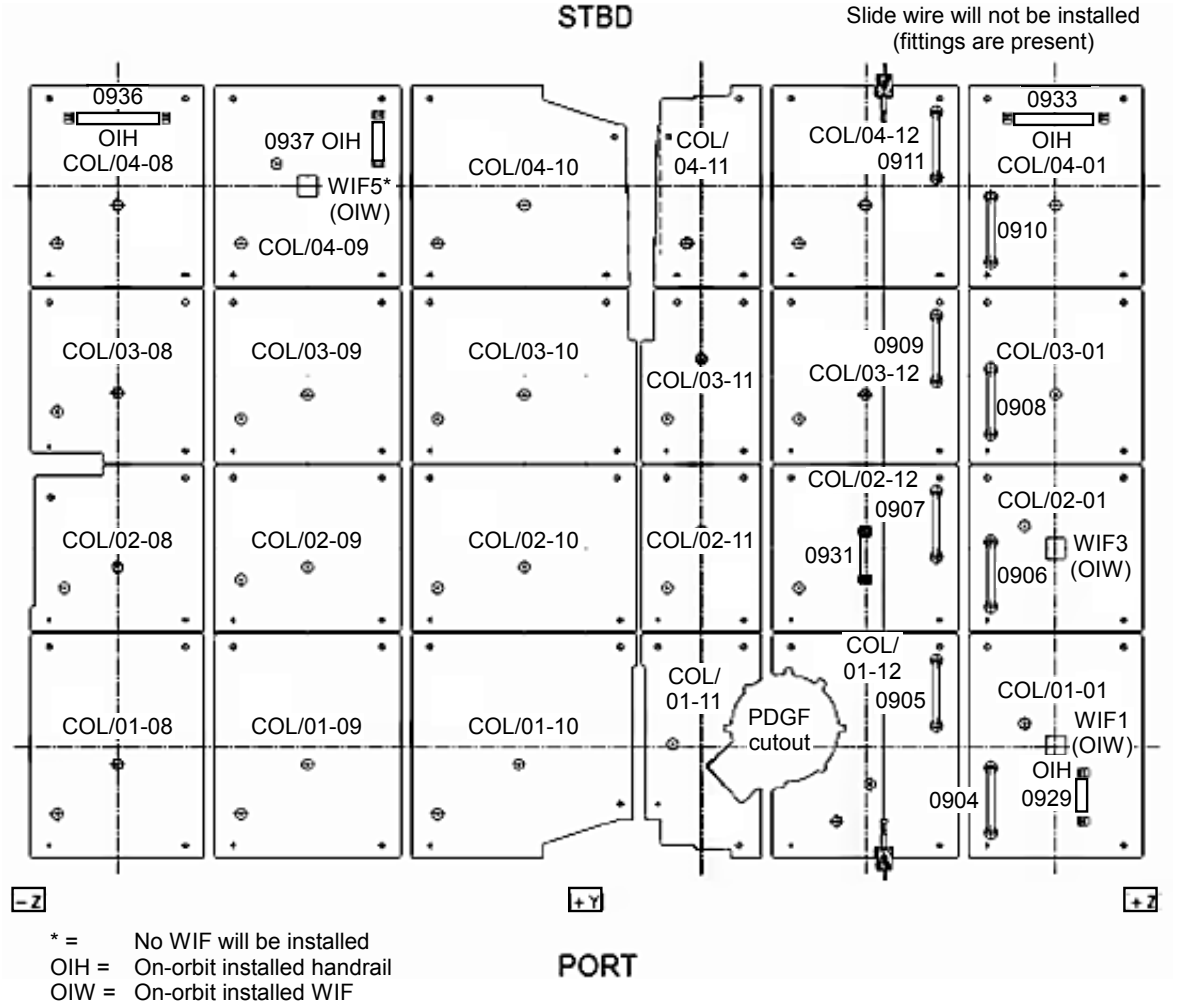

* = No WIF will be installed
OIH = On-orbit installed handrail
OIW = On-orbit installed WIF

jsc48024_010r2.cvx

Columbus Forward Side Handrails, Panels, and WIFs

PDGF SETUP – TASK DATA SHEET (Cont)

Node 2 Stbd CBM (Zenith up)

PDGF INSTALL (02:30)

IV/SSRMS	EV1	EV2
	PDGF INSTALL (00:20) 1. Configure lower panel MLI tent as required for PDGF install 2. Assist EV2 with PDGF install and EDF bolt insertion	PDGF INSTALL (00:20) 1. Ensure all EDFs fully retracted and lanyards clear 2. Install PDGF onto mounting ring soft dock (target pin ~10 o'clock; √alignment arrow on mounting ring) (2-6 lb to install) 3. Insert EDFs bolts into PDGF NOTE EDFs must be driven in a cross pattern (order not critical). Repeat star pattern at final torque until EDFs rotate less than 1/4 turn (expect 2 rounds at B7 setting)
1. IV: Record EDF turns and initial torque: (EDF named by clocking position) EDF / Turns / Green LED(√) 12 _____ ❑ 6 _____ ❑ 3 _____ ❑ 9 _____ ❑		4. **PGT [A7 (9.2ft-lb), CW2, 30.5] 6-Ext 7/16** (Verify turn count 0) Engage EDF bolt, ~2 turns ❑ 12 o'clock EDF (initial torque) ❑ 6 o'clock EDF (initial torque)
	3. Transfer 12-Ext 7/16 socket w/caddy to EV2 4. BRT to endcone handrail 5. **PGT [A7 (9.2 ft-lb), CW2, 30.5] 6-Ext 7/16** Engage EDF bolt, ~2 turns ❑ 3 o'clock EDF (initial torque)	5. Receive caddy w/12-Ext 7/16 socket from EV1 6. Remove 6-Ext; stow on caddy 7. Install 12" socket on PGT; perform pull test 8. **PGT [A7 (9.2 ft-lb), CW2, 30.5] 12-Ext 7/16** Engage EDF bolt, ~2 turns ❑ 9 o'clock EDF (initial torque)
2. IV: Record EDF additional turns and final torque: EDF / Turns / Torque 9 _____ _____ 3 _____ _____ 12 _____ _____ 6 _____ _____		9. **PGT [B7 (25.5 ft-lb), CW2, 30.5] 12-Ext 7/16** Engage EDF bolt to torque (~1 additional turns) ❑ 9 o'clock EDF (final torque)
	6. **PGT [B7 (25.5 ft-lb), CW2, 30.5] 6-Ext 7/16** Engage EDF bolt to torque (~1 additional turn) ❑ 3 o'clock EDF (final torque) ❑ 12 o'clock EDF (final torque) ❑ 6 o'clock EDF (final torque) 7. Verify final torque on EDFs **PGT [B7 (25.5 ft-lb), CW2, 30.5] 6-Ext 7/16**	

PDGF INSTALL (02:30) (Cont)

IV/SSRMS	EV1	EV2
3. IV: Record EDF torque check: EDF Turns Torque 3 _____ _____ 12 _____ _____ 6 _____ _____ 9 _____ _____	Engage EDF bolt to torque (verify < 1/4 additional turn) ❑ 3 o'clock EDF (torque check) ❑ 12 o'clock EDF (torque check) ❑ 6 o'clock EDF (torque check)	
		10. Verify final torque on EDFs **PGT [B7 (25.5 ft-lb), CW2, 30.5] 12-Ext 7/16** Engage EDF bolts (2) to torque (verify <1/4 additional turn) ❑ 9 o'clock EDF (torque check) 11. Swap PGT socket back to 6-Ext 7/16; perform pull test 12. Stow 12-Ext 7/16 on caddy 13. Stow PGT
	8. Inspect gloves; status MCC on RTV and Vectran state	14. Inspect gloves; status MCC on RTV and Vectran state
	LOWER MDPS PANEL REMOVE (00:10)	LOWER MDPS PANEL REMOVE (00:10)
4. SSRMS: GCA for lower panel bolt	9. Position for lower panel bolt 2 release 10. **PGT [B2 (16 ft-lb), CCW2, 30.5] 6-Ext 7/16** Release MDPS bolt, ~9 turns ❑ Bolt 2 Lower panel 11. Position self for panel lift	15. GCA SSRMS for lower panel bolt 3 release 16. RET to lower panel 17. **PGT [B2 (16 ft-lb), CCW2, 30.5] 6-Ext 7/16** Release MDPS bolt, ~9 turns ❑ Bolt 3 Lower panel
5. SSRMS: GCA for panel remove	12. On EV2 GO, lift panel 13. Move panel forward toward endcone 14. Attach RET at HR 0901 to fwd T-handle tool when in reach (leave MLI cover for horseshoe connectors attached to panel) 15. Attach RET on COL HR 0902 to aft T-handle tool 16. Position panel on fwd endcone	18. GCA SSRMS for panel lift and access to aft T-handle 19. Give EV1 GO and lift panel 20. Assist EV1 21. Release RET on panel

PDGF INSTALL (02:30) (Cont)

IV/SSRMS	EV1	EV2
6. SSRMS: GCA for Upper MDPS panel install 7. IV: Record horseshoe connector mate turns and torque Bolt Turns Torque P400(P7) _____ _____ P401(P8) _____ _____ 8. IV: Record upper MDPS panel (COL/ 1-12) turns and torque Bolt Turns Torque 1 _____ _____ 2 _____ _____ 3 _____ _____ 4 _____ _____	PDGF HARNESS INSTALL (00:15) 17. Translate to PDGF bag 18. Retrieve both PDGF cables; temp stow individually on COL HR 903 19. Soft dock PDGF cable 400 horseshoe connector P7/P5 to PDGF J7/J5; rotate the micro-fixture – LOCK (60 deg cw) 20. Soft dock PDGF cable 401 horseshoe connector P6/P8 to PDGF J6/J8; rotate the micro-fixture – LOCK (60 deg cw) 21. **PGT [A7 (9.2 ft-lb), CW2, 30.5] 6-Ext 7/16** Engage horseshoe connector bolt, 20-26 turns to torque ❑ P400 cable P7/P5 to PDGF J7/J5 ❑ P401 cable P6/P8 to PDGFJ6/J8 22. Retrieve RETs from PDGF cables 23. Translate to upper MDPS panel 24. Transfer RET (on T-handle tool) to MWS 25. Remove T-handle tool; stow in trash bag 26. Translate to PDGF bag; stow 3 RETs and T-handle tool	UPPER MDPS PANEL INSTALL (00:15) NOTE MDPS panel bolts should be reinstalled with tight tolerance bolt hole aligned first, followed by slotted hole, then oversized holes; therefore, engage bolt 1, 2, then 3 and 4 in any order 22. GCA SSRMS for upper panel reposition 23. Move upper panel into install position 24. Insert bolt 3 into panel; finger tighten (leave RET on panel) 25. GCA SSRMS to upper panel bolt 1 26. **PGT [A3 (4.8 ft-lb), CW2, 30.5] 6-Ext 7/16** Insert bolt into panel; engage bolt ~9 turns to torque ❑ MDPS Bolt 1, upper panel 27. GCA to upper panel bolt 2; **PGT [A3 (4.8 ft-lb), CW2, 30.5] 6-Ext 7/16** Insert bolt into panel; engage bolt ~9 turns to torque ❑ MDPS Bolt 2, upper panel 28. GCA to upper panel bolt 3; **PGT [A3 (4.8 ft-lb), CW2, 30.5] 6-Ext 7/16** Insert bolt into panel; engage bolt ~9 turns to torque ❑ MDPS Bolt 3, upper panel 29. Release upper panel RET (on HR); stow on MWS 30. GCA to upper panel bolt 4; **PGT [A3 (4.8 ft-lb), CW2, 30.5] 6-Ext 7/16** Insert bolt into panel; engage bolt ~9 turns to torque ❑ MDPS Bolt 4, upper panel
9. SSRMS: GCA for connector mate 10. IV: Verify LTA heater cable demated from COL J01 prior to removal of COL J400 and J401 connector caps	LOWER MDPS PANEL INSTALL (00:35) 27. Translate to COL fwd endcone, stbd side 28. Remove RET from aft T-handle tool in prep for lower panel repositioning; attach RET to HR 902	P400,P401 MATE/LOWER PANEL INSTALL (00:35) 31. GCA SSRMS for cable connector mate 32. On IV GO: remove COL J401 connector cap; stow in trash bag 33. Inspect P401 and J401 connectors 34. Mate cable P401 to J401 ❑ Cable P401 to COL J401

PDGF INSTALL (02:30) (Cont)

IV/SSRMS	EV1	EV2
		35. Route cable thru TA clamps (2); close clamps 36. Remove COL J400 connector cap; stow in trash bag 37. Inspect P400 and J400 connectors 38. Mate cable P400 to J400 ❑ Cable P400 to COL J400 39. Route cable thru TA clamps (3); close clamps 40. WVS survey of PDGF harnesses and connectors 41. Re-install thermal cover • Route chin strap under cables • Pull cover over HS connectors • Velcro in place
11. Record WVS closeout imagery		
12. SSRMS: GCA for panel reinstall	29. Retrieve COL/1-11 (lower) panel and extend toward EV2 30. Verify PDGF cables positioned correctly 31. Remove RET from fwd T-handle tool; attach RET to COL HR 0902 32. Position panel for reinstall (verify MLI tent clear of PDGF harnesses) 33. Position self for lower panel bolt 1	42. GCA SSRMS for COL/1-11 (lower) panel reinstall 43. RET to lower panel T-handle tool when in reach 44. Assist EV1
	NOTE MDPS panel bolts should be reinstalled with tight tolerance bolt hole aligned first, followed by slotted hole, then oversized holes; therefore, engage bolt 1, 2, then 3 and 4 in any order	
13. SSRMS: GCA for panel bolt 4 14. IV: Record lower MDPS panel (COL/1-11) turns and torque Bolt Turns Torque 1 _____ _____ 2 _____ _____ 4 _____ _____ 3 _____ _____	34. **PGT [A3 (4.8 ft-lb), CW2, 30.5] 6-Ext 7/16** Insert bolt into panel; engage bolts ~9 turns to torque ❑ MDPS Bolt 1, lower panel ❑ MDPS Bolt 2, lower panel	45. GCA for lower panel bolt 4 46. **PGT [A3 (4.8 ft-lb), CW2, 30.5] 6-Ext 7/16** Insert bolt into panel; engage bolts ~9 turns to torque ❑ MDPS Bolt 4, lower panel ❑ MDPS Bolt 3, lower panel
	35. Position panel MLI tent over horseshoe connector cables; verify Velcro secure 36. Receive T-handle tools (2); stow in trash bag	47. Release RET from panel; transfer to EV1 48. Remove T-handle tools (2) from lower panel; transfer to EV1

PDGF INSTALL (02:30) (Cont)

IV/SSRMS	EV1	EV2
15. Record WVS closeout imagery	37. Receive socket caddy (with 12-in socket) 38. Retrieve pre-staged RETs (2) 39. Translate to PDGF bag 40. Remove 6-Ext 7/16 socket from PGT; stow on caddy 41. Stow T-handle tools (2), RETs, and socket caddy in bag 42. Inspect gloves; status MCC on RTV and Vectran state	49. Transfer socket caddy (with 12-in socket) and ret to EV1 50. WVS survey of PDGF and panels 51. Inspect gloves; status MCC on RTV and Vectran state
	CBM SEAL COVER REMOVAL COMPLETION (00:40)	MANEUVER AND CLEANUP (00:40)
16. SSRMS: Mnvr to egress position	CAUTION Avoid touching the CBM seals after the covers have been removed	52. Give IV GO for SSRMS mnvr to egress position (~20 min) 53. GCA SSRMS for egress 54. Egress SSRMS
17. SSRMS: GCA for APFR remove	43. Retrieve second CBM cover bag; stow on MWS 44. Remove remaining CBM Seal Covers ❑ Waist tether to HR 928 ❑ Retrieve 3 nadir most covers; stow ❑ Waist tether on HR 913 ❑ Retrieve final cover; stow 45. Secure bag by wrapping adj tether around bag, if reqd 46. Temp stow CBM Seal Cover bag 47. Inspect CBM seals for FOD, report to MCC 48. WVS survey of CBM seals	55. Perform safety tether swap onto Node 2 safety tether • Verify load strap hook slide lock – L • √Safety tether reel unlocked 56. Retrieve SSRMS safety tether; secure to APFR 57. Translate to ICC port aft; retrieve the CBM seal cover bag; stow on MWS 58. GCA SSRMS for APFR removal 59. Remove APFR; stow on BRT (leave WIF Adapter in SSRMS) 60. Verify SSRMS clear 61. Give IV GO to back away SSRMS
18. SSRMS: Mnvr to backaway position		
19. Record WVS closeout imagery	PAYLOAD BAY CLEANUP (00:30)	PAYLOAD BAY CLEANUP (00:45)
20. PLB Tool Inventory	49. Tool inventory 50. Inspect gloves; status MCC on RTV and Vectran state	62. Tool inventory 63. Inspect gloves; status MCC on RTV and Vectran state

PDGF INSTALL (02:30) (Cont)

IV/SSRMS	EV1	EV2
EV1 ❑ PGT and ret T-Bar: ❑ 2 wire ties ❑ Sm trash bag w/wire tie ❑ Adj tether ❑ Ret ❑ Ret w/PIP BRT ❑ 2 wire ties ❑ Ret NOTE: 1 adj w/PLB fairlead ❑ ❑ **CBM Seal Lg Trash Bags (2)** • Covers (4) • Adj tether • Ret (lg-eq) ❑ **PDGF Bag** • Adj tether (2; 1 int, 1 ext) • RETs (5) • Socket caddy w/12" and 6" • T-handle tools (3) • 7/16" box end wrench **EV2** ❑ PGT w/6" and ret T-Bar: ❑ 2 wire ties ❑ Sm trash bag w/ret, wire tie, and PDGF connector caps (2) ❑ Ret w/PIP ❑ Ret ❑ Adj tether BRT ❑ 2 wire ties ❑ Ret NOTE: 1 adj w/PLB fairlead	51. Retrieve CBM Seal Cover bag; stow on MWS 52. Retrieve PDGF bag; stow on BRT 53. Retrieve PLB fairlead 54. Translate to Node 2 55. Attach to airlock safety tether, HR 0333 • Verify load strap hook slide lock – L • √Safety tether reel unlocked 56. Leave Node 2 safety tether attached 57. Translate to Airlock 58. Disconnect airlock 85-ft safety tether; stow on fish stringer 59. Stow CBM Seal Cover bag and PDGF bag on fish stringer	64. Retrieve PLB fairlead 65. Translate to Node 2 66. Stow APFR (w/55-ft tether) in Node 2 WIF 14 (nadir endcone) • Verify locking collar blk-on-blk • Perform pull test 67. Attach to airlock safety tether, HR 0305 • Verify load strap hook slide lock – L • √Safety tether reel unlocked 68. Leave Node 2 safety tether (85-ft) attached 69. Translate to Airlock 70. Disconnect airlock 85-ft safety tether; stow on fish stringer 71. Stow CBM Seal Cover bag on fish stringer

PDGF INSTALL – TASK DATA SHEET

Estimated Task Duration:

	With SSRMS	Without SSRMS
One EV Crew	N/A	N/A
Two EV Crew	02:30	N/A

Tools:

EV1	EV2
• PGT 6-Ext 7/16 • BRT • RET • T-handle tools (3) • RAD w/2-in ext or 7/16" box end wrench	• PGT 6-Ext 7/16 • PGT 12-Ext 7/16 • RET

EVA Fasteners:

Fastener Name	Head Size	Qty	Install Torque (ft-lb)	Release Torque (ft-lb)	Failure Torque (ft-lb)	Turns
PDGF EDF	7/16	4	10 initial 25.8 final	25.8	143.3	4-6 total
Horseshoe connector bolt	7/16	2	7.5-10	10	14.6	20-26
MDPS bolt	7/16	8	3.6-5.8	11.1	22	~9 (ksc)

EVA Connectors:

Harness	To	Clamps (#)	Conn Size	Function
P400 cable				
P400	J400	3	25	power
P7/P5 (horseshoe)	J7/J5			
P401 cable				
P401	J401	2	25	power
P6/P8 (horseshoe)	J6/J8			

Connector Inhibits:

Task	Inhibit (IF LTA CABLE NOT DISCONNECTED)
PDGF Cables P400 and P401 Install	LTA heater cable demated from COL J01 OR L12 (SSP1) APCU 1 CONV – OFF (tb-bp) OUTPUT RLY – OPEN (tb-bp) AND SSRMS LEE umbilicals not mated to PDGF

Foot Restraints:

Task	WIF	Setting
PDGF retrieve/install	SSRMS	12, PP, A, 6

Notes:

1. EDFs must be driven in a cross pattern (order not critical)
2. MDPS panel bolts should be reinstalled with tight tolerance bolt hole first, followed by the slotted bolt hole, then either oversized bolt hole; therefore engage bolt 1, 2, then 3/4 in any order
3. MDPS panel bolts took ~ 9 turns at KSC (1819 bolt data specifies 4 turns)

Cautions:

1. None

Warnings:

1. Verify electrical inhibits in place prior to connector mate/demate

PDGF Cable Connections

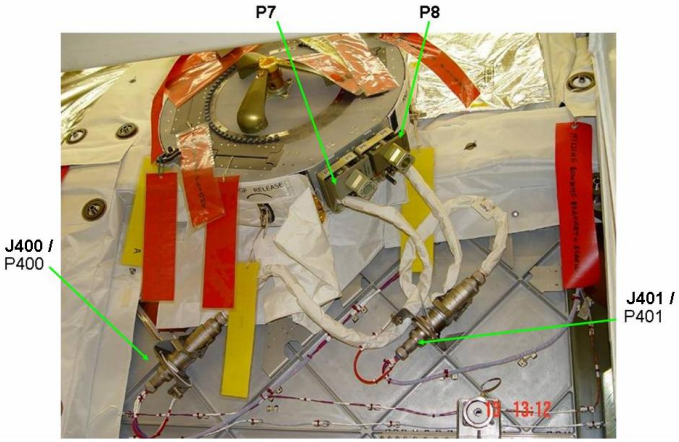

P1 NTA REMOVAL PREP (01:30)

IV/SSRMS	EV1	EV2
1. Verify with MCC, P1 TRRJ rotated to and DLAs configured for EV access to NTA N2 lines	SETUP (00:40) 1. Retrieve NTA bag; stow on BRT 2. Translate to P1; temp stow NTA bag between TFR and CETA rail 3. Inspect gloves; status MCC on RTV and Vectran state 4. Retrieve MUT-Ballstack w/adj equip tethers 5. Translate to P1, CETA cart 2 (stbd cart) 6. Install MUT-Ballstack onto zenith STBD swingarm ECOM; route adj to CETA cart handrail 7. Retrieve MUT-Ballstack w/adj equip tethers 8. Attach MUT to MUT-Ballstack 9. Install MUT-Ballstack-MUT onto nadir CETA cart handrail 10. Route MBM adj to CETA handrail 11. Retrieve Torque Multiplier; stow on MWS 12. Retrieve 7.8-ext 5/8 socket; stow in trash bag 13. Translate to NTA	SETUP (00:20) 1. Retrieve QD booties from fish stringer; stow on MWS 2. Translate to P1 via Lab port, around ESP1, and up strut; fairlead at top of strut 3. Translate to P1, bay 6, face 4 (outboard route) NTA N2 LINE DISCONNECT (00:25) WARNING NTA fluid QD lines and clamps may be hot if exposed to direct sun. Avoid contact with hardware until shaded ~20 min NOTE Ensure fluid QD lines routed under shroud straps
2. Verify MCC-H GO for N2 QD demate	BREAK TORQUE ON NTA BOLTS (00:30) 14. Install TM on Bolt, √Anti-Backlash Neutral **PGT [B7 (25.5 ft-lb), CCW2, 30.5], no socket** Break torque on NTA bolt, 5 turns ❑ Bolt 4 (break torque) ❑ Bolt 3 (break torque) ❑ Bolt 2 (break torque) ❑ Bolt 1 (break torque)	4. Inspect gloves; status MCC on RTV and Vectran state 5. Open thermal shroud (slide from nadir to zenith along guide straps) 6. On IV GO: demate zenith NTA fluid line QD F172 from ATA QD M2 • Verify aft white band visible • Verify detent button fully installed and up • Verify detent button can be depressed • Verify no sideloads, then push bail fwd (roll the male sleeve) • Depress detent button and pull bail to aft position • Check fwd white band visible and detent button pops back up • Demate QD by pulling back on release ring and pulling QD off • Verify fwd white band not visible
3. Record NTA bolt **re-seat** turns and torque w/PGT Bolt Turns Torque 1 _____ _____ 2 _____ _____ 3 _____ _____ 4 _____ _____	15. Stow TM on MWS 16. Install 5/8 socket on PGT; perform pull test 17. **PGT [B6 (24 ft-lb), CW2, 30.5], 7.8-ext 5/8** Reseat NTA bolt, ~1 turn to torque ❑ Bolt 1 (re-seat) ❑ Bolt 2 (re-seat) ❑ Bolt 3 (re-seat) ❑ Bolt 4 (re-seat)	7. Partially install QD bootie around N2 flexline

P1 NTA REMOVAL PREP (01:30) (Cont)

IV/SSRMS	EV1	EV2
	18. Remove socket; stow in trash bag 19. Stow PGT 20. Verify soft dock mechanism in engaged position (pin extended)	8. Mate QD F172 on NTA dummy receptacle M3 • Inspect QD for debris and damage • √Detent button up • √Fwd white band not visible • √No side loads • Mate QD; verify fwd white band visible • Snap back test – verify release ring snaps back out and fwd white band still visible • Perform pull test • Perform gap check for FID • DO NOT OPEN VALVE CAUTION Fluid line clamps nearest the line origin at the NTA must remain closed to prevent crimping 9. Install QD bootie; verify Velcro secure 10. Open 3 zenith fluid line clamps 11. Stow zenith N2 line in clamps; close clamps 12. Demate nadir NTA fluid line QD F173 from ATA QD M1 • Verify aft white band visible • Verify detent button fully installed and up • Verify detent button can be depressed • Verify no sideloads, then push bail fwd (roll the male sleeve) • Depress detent button and pull bail to aft position • Check fwd white band visible and detent button pops back up • Demate QD by pulling back on release ring and pulling QD off • Verify fwd white band not visible 13. Give IV GO for NTA venting 14. Partially install QD booty around N2 flexline
NOTE Venting and electrical connector demates are dependent on CMG momentum management status and may be deferred on MCC call 4. When both QDs demated from ATA: inform MCC-H “GO for NTA venting and inhibits”		

P1 NTA REMOVAL PREP (01:30) (Cont)

IV/SSRMS	EV1	EV2
5. MCC-H: Inform IV – NTA venting and inhibits complete, EV is GO for electrical connector dematesRPCM P1 1A_A RPC 10 – OPEN, CL cmd INH RPCM P1 2B_A RPC 11 – OPEN, CL cmd INH RPCM P1 2B_C RPC 12 – OPEN, CL cmd INH P1-2 MDM SDO card slot 8, ch 0 thru 6 – op	ELECTRICAL CONNECTOR DEMATE (00:10) CAUTION Avoid pulling electrical cables. Avoid bending radii less than 10 times the cable diameter 21. Open clamps restraining electrical cables (6) 22. On IV GO, demate NTA electrical connectors: ❑ P1-P631 from NTA J1 ❑ P1-P632 from NTA J2 ❑ P1-P633 from NTA J3 23. Bundle cables together and wire tie near cable along CETA rail stanchions 24. Close TA clamps (6) TRANSLATE TO AIRLOCK (00:10) 25. Stow TM and 5/8 socket in NTA crewlock bag 26. Retrieve NTA bag; stow on BRT 27. Verify CETA brake released (press pedal twice) 28. Inspect gloves; status MCC on RTV and Vectran state 29. Translate to Airlock	15. Mate QD F173 on NTA dummy receptacle M2 • Inspect QD for debris and damage • √Detent button up • √Fwd white band not visible • √No side loads • Mate QD; verify fwd white band visible • Snap back test – verify release ring snaps back out and fwd white band still visible • Perform pull test • Perform gap check for FID • DO NOT OPEN VALVE 16. Install QD bootie; verify Velcro secure 17. Open 3 nadir line TA clamps 18. Stow nadir N2 line in clamps; close clamps 19. Inspect NTA MLI for interference with rails 20. Close P1 aft thermal shroud TRANSLATE TO AIRLOCK (00:10) 21. Inspect gloves; status MCC on RTV and Vectran state 22. Translate to Airlock 23. If time available, perform Get-Ahead Task: OTSD STOW (00:20)

P1 NTA REMOVAL PREP – TASK DATA SHEET

Estimated Task Duration:

	With SSRMS	Without SSRMS
One EV Crew	N/A	N/A
Two EV Crew	N/A	01:30

Tools:

EV1	EV2
• BRT • RET • TM • PGT	• BRT • RET • NTA QD Booties

Foot Restraints:

Task	WIF	APFR Setting
N/A		

EVA Connectors:

Harness	To	Clamps (#)	Conn size	Function
P1-P631	NTA J1	2	15	Data
P1-P632	NTA J2	1	15	Data
P1-P633	NTA J3	3	17	Power

EVA Fluid QD's:

Line Name	From	To	Clamps (#)	QD Size	Function
F172	ATA QD M2	NTA M3	3	¼ inch	Nitrogen pressure
F173	ATA QD M1	NTA M2	3	¼ inch	Nitrogen pressure

Connector Inhibits:

Task	Inhibit
P1-631 to NTA J1	None required
P1-632 to NTA J2	None required
P1-633 to NTA J3	RPCM P1 1A_A RPC 10 – OPEN, CL cmd INH RPCM P1 2B_A RPC 11 – OPEN, CL cmd INH RPCM P1 2B_C RPC 12 – OPEN, CL cmd INH P1-2 MDM SDO card slot 8, ch 0 thru 6 – op

EVA Fasteners:

Fastener Name	Head Size	Qty	Install Torque (ft-lb)	Release Torque (ft-lb)	Failure Torque (ft-lb)	Turns
NTA Bolts (release)	5/8	4		127.5	186.5	15-17.5
NTA Bolts (install)	5/8	4	24		47.9	15-17.5

ORU Identification:

ORU	Part number	Serial Number
P1 NTA	1F96000-1	0003 (P1↓) 0004 (PLB↑)

Notes:

1. Ensure Fluid QD lines routed under shroud straps

Cautions:

1. NTA Fluid QD lines and clamps may be hot is exposed to direct sun. Avoid contact until shaded ~20 min
2. Avoid pulling electrical cables. Avoid bend radii less than 10 times the cable diameter
3. The fluid line clamp nearest the line origin at the NTA must remain closed to prevent crimping

Warnings:

1. Verify electrical inhibits in place prior to electrical mate/demate
2. Verify P1 TRRJ rotation inhibits in place

P1 NTA REMOVAL PREP – TASK DATA SHEET (Cont)

Nitrogen Tank Assembly (front side: electrical connectors and bolts)

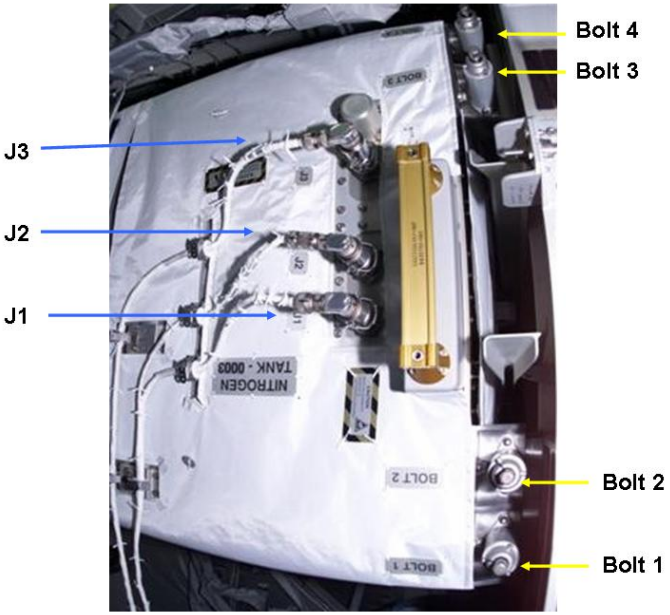

NTA – Aft side, Fluid QDs

Fluid QD line names by NTA

Old P1	New P1
F173 (nadir)	F1/M2/M1 (nadir)
F172 (zenith)	F2/M3/M2 (zenith)

Two N2 fluid QD lines on the aft face of the NTA connect to the ATA on truss face 4

TA clamp nearest each line origin must remain closed

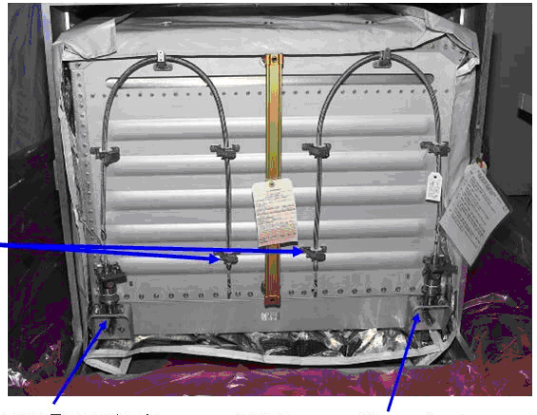

M3 Dummy Receptacle

M2 Dummy Receptacle

CLEANUP AND A/L INGRESS (00:25)

IV/SSRMS	EV1	EV2
1. Prior to ingress, perform WVS PWRDN (P/TV, WVS CUE CARD)	CLEANUP AND INGRESS (00:25) 1. Perform tool inventory 2. Receive safety tether from EV2 3. Stow EV2 safety tether on handrail 0554 (port stanchion); verify tether reel is in "UNLOCK" 4. Transfer fish stringer to EV2 5. Transfer NTA bag to EV2 6. Transfer left waist tether to EV2 7. Detach safety tether from left D-ring extender 8. Stow safety tether on airlock handrail (fwd posn) or fwd airlock handrail stanchion; verify tether reel is in "UNLOCK" 9. Ingress Airlock 10. Close hatch thermal cover; attach Velcro strap 11. Connect SCU to DCM; √SCU locked 12. WATER – OFF (fwd) CAUTION Do not close hatch until EMU water – OFF for 2 min 13. Verify outer hatch clear of hardware 14. EV Hatch – verify hatch handle per decal; close and lock 15. Go to PRE-REPRESS (DEPRESS/REPRESS Cue Card)	CLEANUP AND INGRESS (00:25) 1. Perform tool inventory 2. Open thermal cover; ingress Airlock 3. Attach left waist tether to fwd UIA tether point 4. Detach safety tether from left D-ring extender and transfer to EV1 5. Receive fish stringer from EV1; stow 6. Receive NTA bag from EV1; stow 7. Attach EV1's waist tether to airlock D-ring 8. Connect SCU to DCM; √SCU locked 9. WATER – OFF (fwd) CAUTION Do not close hatch until EMU water – OFF for 2 min 10. Go to PRE-REPRESS (DEPRESS/REPRESS Cue Card)

GET-AHEAD TASK: OTSD STOW (00:20)

IV/SSRMS	EV1	EV2
1. Record WVS closeout imagery		OTSD STOW (00:20) 1. Retrieve OTSD from Airlock; ret and stow on BRT 2. Translate to S0 WIF 7 (aft side S0, STBD wedge face, zenith WIF) 3. Verify OTSD WIF actuator in CAPTURE 4. Install OTSD in WIF with clocking =1 (or 7, parallel to keel structure) 5. Rotate OTSD WIF actuator to LOCK 6. Verify WIF secondary lock engaged (lever restrained) on single-pin side 7. Perform pull test 8. WVS survey of OTSD stow 9. Translate to Airlock

GET-AHEAD TASK: OTSD STOW – TASK DATA SHEET

Estimated Task Duration:

	With SSRMS	Without SSRMS
One EV Crew	N/A	00:20
Two EV Crew	N/A	00:20

Tools:

EV1	EV2
	• BRT • RET

WIF:

Task	WIF	APFR Setting
OTSD install	S0 WIF 7	Parallel to keel structure, CL= 1 or 7

ORU Identification:

ORU	Part number	Serial Number
OTSD	SEG33119200 -302	1002

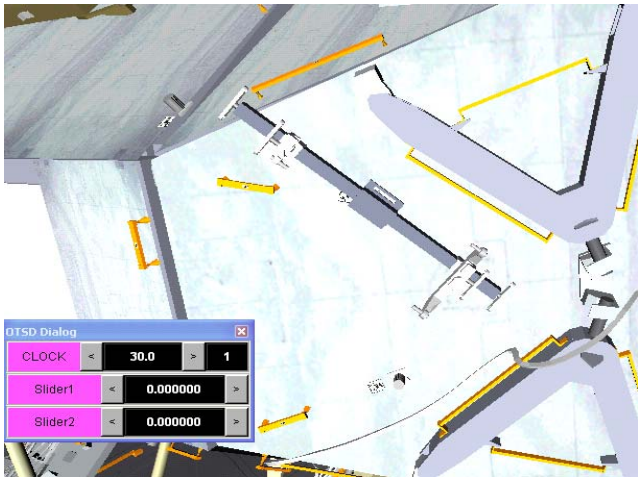

Notes:
1. None

Cautions:
1. Do not kick OTSD once installed in WIF

Warnings:
1. None

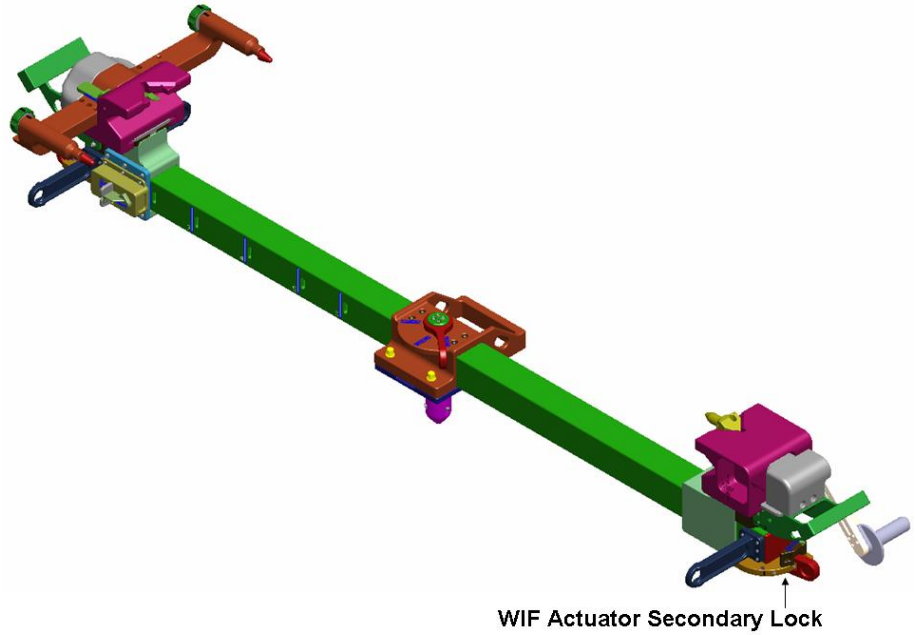

EVA 2 BRIEFING CARD

EV1 _____
EV2 _____
IV _____
R1/M1 _____

EVA Prep start (GMT) ____/____ ____:____ ____
Depress to 10.2 ____ ____:____ ____
Start Purge ____ ____:____ ____
PET 00:00 ____ ____:____ ____

Flight Day Prior to EVA – General Briefing (All)

1. EVA Prep
   - ❑ Get-up Plan – clothing and EMU equipment bag – EV1
   - ❑ Prebreathe protocol review (Notes and Warnings) – IV
   - ❑ Equipment lock activities – IV responsibilities
   - ❑ Suit donning plan – special requests – EV's, IV's
   - ❑ SAFER, MWS, tools, C-Lk positions, bag stowage – EV2
   - ❑ Airlock depress review – IV

2. EV Crew Procedure Review – EV1
   - ❑ Egress Plan
   - ❑ Order of tasks (summary timeline)
   - ❑ Translation plan, fairleads, and tether swaps
   - ❑ Hazards
   - ❑ Ingress Plan

3. Robotics – R1/M1
   - ❑ SRMS/SSRMS initial position, maneuvers, clearances
   - ❑ Coordinate Frames
   - ❑ SRMS/SSRMS comm protocol review – expected calls, use first names
   - ❑ GCA – when, where, handover language
   - ❑ Cameras
   - ❑ Contingencies
     - Suit anomalies while ingressed
     - Suit anomalies while ingressed and holding payload/ORU

Flight Day Prior to EVA – Additional Briefing (EV, IV)

4. Communications – CDR, IV
   - ❑ Overall setup: big loop, A/G2, S/G2, ICOM, Hardline, remind EV crew when mode swapping
   - ❑ EV/IV comm protocol review – Use EV1(2) for DCM sw throws (all time in A/L), use first names otherwise

5. General Procedure Review – EV1
   - ❑ Get ahead tasks
   - ❑ Constraints – ground and flight – IV
   - ❑ Notes, Cautions, and Warnings review – IV
   - ❑ Contingency procedures – crib sheet

6. Emergencies Review – EV1
   - ❑ Emergency suit doff and power down during EVA prep
   - ❑ Loss of comm
   - ❑ EMU malfunctions
   - ❑ Lost tools
   - ❑ Lost crewmember
   - ❑ DCS
   - ❑ Abort and Terminate scenarios, protocols
   - ❑ Hand signal reviews

7. Post EVA – IV's
   - ❑ Suit doffing responsibilities
   - ❑ Post EVA plan

√Expedited Suit Doffing cue card pre-positioned for EVA day

EVA 2 BRIEFING CARD (Cont)

EVA Day, prior to Prebreathe Protocol

1. Reminders
   - ❑ Translate slow (then space is like water). Relax grip
     - o Be extra careful on non-standard routes or orientations
     - o Don't hop
   - ❑ Tether Discipline
     - o Check all gates closed and hooks locked; check reel locked/ unlocked
     - o Local tether when stopped. Check tethers before you leave
     - o When something is attached to a tether, don't grab the tether by the hook
     - o Good pull tests
   - ❑ APFR ops
   - ❑ Be disciplined when tired
   - ❑ Hazards: payloads, etc
   - ❑ Openness: when you have boot or glove pain let us know
   - ❑ OK for IV and ground to check on us. If you need update, ask
   - ❑ Monitor safety tether. Hold peanut when necessary
   - ❑ Let mistakes pass
   - ❑ If you get a mal, read the caution and warning message so everyone knows what it is
   - ❑ Manage frustration (slow down, if needed)
   - ❑ Cold soak before ingress
   - ❑ Verify PGT settings. PGT collars are easy to bump
   - ❑ Read turns, torque, green light
   - ❑ SSRMS: coordinate frames and positive GCA handovers
   - ❑ Review first post-egress steps
   - ❑ Review abort/terminate priorities and procedures
   - ❑ Glove Checks
   - ❑ Day/night reconfigurations

IV Checklist Verification Items

1. Generic
   - ❑ Day/Night Cycles
     - • √Lights, gloves and heaters, tethers, and MWS
   - ❑ √Load Alleviating Strap on Safety Tethers not damaged
     - • Crew report: "**Safety Tether strap looks good**"
   - ❑ √Safety Tether Crew Hooks Slidelock are locked
     - • Crew Report: "**Locked and locked**"
   - ❑ √Both SAFER valves down at egress
     - • Crew Report: "**Both handles down**"
   - ❑ √APFR locking collar Black-on-black and pull test
     - • Crew Report: "**Black-on-black, good pull test**"
   - ❑ √PGT Green light on for bolt engage
     - • May get Lo Torque msg at bolt release
     - • Crew Report: "**XX turns, XX ft-lb (green light)**"
   - ❑ √Latches closed on lid, door, etc (i.e., √in landing config)
     - • Crew Report: "**XX Latches done**"
   - ❑ √Connectors for no bent pins, no FOD, inhibits in place
     - • Crew Report: "**Pins good, no FOD, bend radius OK**"
     - • Crew Report: "**Are inhibits in place?**"

2. Task Specific
   - ❑ √Tethers and Tools clear prior to SSRMS ORU movement
     - • Each EV report: "**Tethers and tools clear**"

3. Tool inventory
   - ❑ √Tethers on MWS
   - ❑ Confirm all others as standard unless removed

EVA 2 TOOL CONFIG

Pre-EVA Tool Configuration

AIRLOCK

- ☐ Staging Bag
  - ☐ Fish stringer (2)
    - ☐ Connector Cleaner Tool Kit
    - ☐ Spare PGT (s/n_____)
    - ☐ PGT Battery (s/n_____)
      - ☐ Connector Pin Straightener
    - ☐ MWS Key Strap (wiretie to fish str)
    - ☐ Velcro/Tape Caddy
    - ☐ Spare Safety Tether (55')
    - ☐ Pry Bar
    - ☐ Probe
- ☐ IV Bag
  - ☐ Contamination Detection Kit
    - ☐ Gold Salt Coupon (6)
    - ☐ Color Chart (2)
    - ☐ ISS Contamination Sampler (2)
    - ☐ Shuttle Contamination Sampler (2)
    - ☐ Ammonia Draeger Tube (12)
  - ☐ Mesh Bag
    - ☐ Towels (2)
  - ☐ DCM Plug (2) (SAFER hard mount)
  - ☐ GP Caddy (2)
    - ☐ Thermal Mittens (2 pr)
  - ☐ Socket Caddy
    - ☐ 1/2 x 8-in socket (IV Hatch)
    - ☐ 7/16 x 6-in socket (backup)
- ☐ D-ring extender on D-ring

- -

- ☐ Crewlock Bag – NTA tools
  - ☐ Ret equip tether (1 lg-eq) – airlock
  - ☐ Adj equip tether (1) – ext
  - ☐ Round scoop
    - ☐ Ret equip tether
  - ☐ Round Torque Multiplier
    - ☐ TM socket – round 5/8, proud
    - ☐ Ret equip tether
  - ☐ Wire Tie Caddy (2)
  - ☐ Digital camera and bracket (morning of EVA)
    - ☐ Ret equip tether
  - ☐ Socket Caddy
    - ☐ 7.8-ext 5/8 rigid socket
    - ☐ Ret equip tether

(Cont)

EV1

- ☐ MWS
  - ☐ Right swing arm
    - ☐ PGT (s/n _____, batt s/n_____)
      - ☐ No socket √PGT settings
      - ☐ Ret equip tether (eq-eq; ret box @ PGT)
  - ☐ T-Bar
    - ☐ Wire ties (2)
    - ☐ Small EVA trash bag (√zipper)
      - ☐ Wire tie
    - ☐ Socket Caddy
      - ☐ 7.8-Ext 5/8 rigid socket
      - ☐ Adj equip tether
    - ☐ Ret equip tether (eq-eq) w/PIP pin
    - ☐ Ret equip tether (eq-eq)
    - ☐ Adj equip tether (2)
  - ☐ BRT
    - ☐ Wire ties (2)
    - ☐ Adj equip tether
    - ☐ Ret equip tether (eq-eq)
- ☐ D-ring extender (2)
  - ☐ Waist tether (to left D-ring extender)
- ☐ SAFER

EV2

- ☐ MWS
  - ☐ Right swing arm
    - ☐ PGT (s/n _____, batt s/n _____)
      - ☐ No socket √PGT settings
      - ☐ Ret equip tether (eq-eq; ret box @ PGT)
  - ☐ T-Bar
    - ☐ Wire ties (2)
    - ☐ Small EVA trash bag (√zipper)
      - ☐ Wire tie
    - ☐ Ret equip tether (eq-eq) (to right D-ring ext)
    - ☐ Ret equip tether (eq-eq) w/PIP pin
    - ☐ Adj equip tether (2)
  - ☐ BRT
- ☐ Wire ties (2)
  - ☐ Ret Equip tether (eq-eq)
- ☐ D-ring extender (2)
  - ☐ Waist tether (to left D-ring extender)
- ☐ SAFER

Post-EVA Tool Configuration

AIRLOCK

- ☐ Staging Bag
  - ☐ Fish stringer
    - ☐ Connector Cleaner Tool Kit
    - ☐ Spare PGT
  - PGT Battery
    - ☐ Connector Pin Straightener
    - ☐ MWS Key Strap
    - ☐ Velcro/Tape Caddy
    - ☐ Spare Safety Tether
    - ☐ Pry Bar
    - ☐ Probe
- ☐ IV Bag
  - ☐ Contamination Detection Kit
    - ☐ Gold Salt Coupon (6)
    - ☐ Color Chart (2)
    - ☐ ISS Contamination Sampler (2)
    - ☐ Shuttle Contamination Sampler (2)
    - ☐ Ammonia Draeger Tube (12)
  - ☐ Mesh Bag
    - ☐ Towels (2)
  - ☐ DCM Plug (2) (SAFER hard mount)
  - ☐ GP Caddy (2)
    - ☐ Thermal Mittens (2 pr)
  - ☐ Socket Caddy
    - ☐ 1/2 x 8-in socket (IV Hatch)
    - ☐ 7/16 x 6-in socket (backup)
- ☐ D-ring extender on D-ring

- -

- ☐ Crewlock Bag – NTA tools
  - ☐ Ret equip tether (1 lg-eq) – Airlock
  - ☐ Adj equip tethers (1) – ext
  - ☐ Round scoop
    - ☐ Ret equip tether
  - ☐ Round Torque Multiplier
    - ☐ TM socket – round 5/8, proud
    - ☐ Ret equip tether
  - ☐ Wire Tie Caddy (2)
  - ☐ Digital camera and bracket
    - ☐ Ret equip tether
  - ☐ Socket Caddy
    - ☐ 7.8-Ext 5/8 rigid socket
    - ☐ Ret equip tether (eq-eq)

(Cont)

EV1

- ☐ MWS
  - ☐ Right swing arm
    - ☐ PGT
    - ☐ Ret equip tether (eq-eq)
  - ☐ T-Bar
    - ☐ Wire ties (2)
    - ☐ Small EVA trash bag
      - ☐ Wire tie (from SSPTS)
      - ☐ Wire tie (from NTA electricals)
      - ☐ Wire tie
    - ☐ Ret equip tether (eq-eq) w/PIP pin
    - ☐ Ret equip tether (eq-eq)
    - ☐ Adj equip tether
  - ☐ BRT
    - ☐ Wire ties (2)
    - ☐ Adj equip tether
    - ☐ Ret equip tether (eq-eq)
- ☐ D-ring extender (2)
  - ☐ Waist tether
- ☐ SAFER

EV2

- ☐ MWS
  - ☐ Right swing arm
    - ☐ PGT
      - ☐ Ret equip tether (eq-eq)
  - ☐ T-Bar
    - ☐ Wire ties (2)
    - ☐ Small EVA trash bag
      - ☐ Wire ties (2)
    - ☐ Ret equip tether (eq-eq)
    - ☐ Ret equip tether (eq-eq) w/PIP pin
    - ☐ Adj equip tether (3)
  - ☐ BRT
    - ☐ Wire ties (2)
    - ☐ Ret Equip tether (eq-eq)
- ☐ D-ring extender (2)
  - ☐ Waist tether
- ☐ SAFER

EVA 2 TOOL CONFIG (Cont)

AIRLOCK (Cont)

- ☐ Ret equip tethers (2) (lg-eq; for MB/Ms)

- ☐ Fish Stringer – MLI (attached to NTA Bag)
- ☐ Trunnion scuff plate covers (4)
- ☐ Trunnion pin covers (4, Velcroed to scuff plate covers)
- ☐ T-handle tool (short)
- ☐ Adj equip tethers (2)

- ☐ Contingency Tool Crewlock Bag – endcone
- ☐ 85-ft safety tethers (2)
- ☐ Waist tether
- ☐ Socket Caddy
- ☐ 2-ext 7/16th rigid socket
- ☐ RAD s/n_____
- ☐ EVA Ratchet
- ☐ Vise Grips
- ☐ T-Handle tool (short)
- ☐ T-Handle tool (long)

Prior to EVA:

- Inspect small trash bag bristles for damage or deformation
- Inspect RET cords for damage
- Inspect safety tethers and waist tethers load alleviating straps

Ret/Adj Type	Usage	Availability
Ret eq-eq (-381)	10	18 (16+2)
Ret eq-eq w/PIP (-383)	2	4
Ret Lg-eq (-385)	3	8
Adjustable	9	11 (9+6-4)

ISS Configuration Notes:

- MT at WS 7 w/both CETA carts to STBD
- SSRMS on Node 2 PDGF
- Columbus on Node 2 STBD CBM

AIRLOCK

- ☐ Fish stringer
- ☐ T-handle tool
- ☐ Adj equip tethers (2)
- ☐ Socket Caddy
- ☐ 7.8-ext 5/8 rigid socket
- ☐ Adj equip tether

- ☐ Ret equip tether (lg-eq)
- ☐ MUT-Ballstack-MUT
- ☐ Adj equip tethers (2)

- ☐ Ret equip tether (lg-eq)
- ☐ MUT-Ballstack
- ☐ Adj equip tethers (2)

- ☐ Contingency Tool Crewlock Bag – endcone
- ☐ 85-ft safety tethers (2)
- ☐ Waist tether
- ☐ Socket Caddy
- ☐ 2-ext 7/16 rigid socket
- ☐ RAD sn_____
- ☐ EVA Ratchet
- ☐ Vise Grips
- ☐ T-Handle tool (short)
- ☐ T-Handle tool (long)

EVA 2 INHIBIT PAD

Orbiter (1)

ALL EVAs

TCS

L12 1. √TCS POWER – OFF

KU-BAND ANTENNA

MCC-H 1. √KU-BAND Mask – active
2. √KU-BAND EVA Protect Box – active

RCS

If EV crew < 27 ft from FRCS
IV 1. √DAP: VERN, FREE, LO Z (flt specific check with GNC)
O14,15,16 2. √RJDF F1, F2, F3, F4 MANF DRIVER (four) – OFF
LOGIC (four) – OFF
MCC-H 3. √Above RCS config
IV 4. √RCS F – ITEM 1 EXEC (*)
√JET DES F1U – ITEM 17 (*)
F3U – ITEM 19 (*)
F2U – ITEM 21 (*)

S-BAND ANTENNAS

NOTE
Possible loss of comm when forced LL FWD antenna

IV If EV crew < 1.6 ft from S-Band antenna
A1R 1. S-BAND FM ANT – XMIT LOWER/RCVR UPPER
2. √MCC, lower antenna selected
If no comm, or on MCC GO
C3 3. S-BAND PM ANT – LL FWD
When EVA crewmember at least 1.6 ft away from all S-Band upper antennas
C3 4. S-BAND PM ANT – GPC

Ground

ALL EVAs

GROUND RADAR

MCC-H 1. √TOPO console, ground radar restrictions in place for EVA

USOS (1)

ALL EVAs

PCU

NOTE
PCUs may require up to 1 hr warm-up period before they are operational

MCC-H 1. √PCUs (two) operational in discharge mode and one of the following:
a. CCS PCU EVA hazard control enabled
b. No more than two arrays unshunted
c. No more than two arrays pointed < 105º from velocity vector

OR

2. One or no PCUs operational in discharge mode and one of the following:
a. No more than two arrays unshunted
b. No more than two arrays pointed < 105º from velocity vector

LOCATION DEPENDENT INHIBITS

LAB WINDOW (Translation to Payload Bay)

IV Verify LAB window shutter – close

KU-BAND (SGANT) ANTENNA

MCC-H If EV crew < 3.3 ft from KU-BAND antenna
1. Park KU-BAND:
1.1 Pointing Mode – Inhibit
1.2 PLC – Reset
1.3 Autotrack Continuous Retry – Inhibit

Cont next page

EVA 2 INHIBIT PAD (Cont)

USOS (2)

LOCATION DEPENDENT INHIBITS

S-BAND (SASA) ANTENNAS

MCC-H If EV crew < 3.6 ft from S1 SASA [P1 SASA]
1. P1 SASA (S1 SASA) – Active
2. S1 SASA [P1 SASA] – Powered down

SARJ

MCC-H If EV crew working within 2 ft or outboard of SARJ:
1. √DLA (1) – LOCKED
2. All motor setpoints set to zero
3. All motors deselected

OR

4. Both DLAs – LOCKED

TRRJ (P1 NTA R&R)

MCC-H When EV crew working within 2 ft of P1(S1) TRRJ rotation envelope:
1. √DLA (1) – LOCKED
2. √Other DLA (1) – ENGAGED

UNGROUNDED CONNECTORS (SSPTS and translation to payload bay)

MCC-H Verify SSPTS deactivated:
1. √RPCM LA2A3B_D RPC 1 – Open, Close Cmd Inhibit
   LA1A4A_D RPC 3 – Open, Close Cmd Inhibit
   Z13B_A RPC 2 – Open, Close Cmd Inhibit
   Z14B_A RPC 2 – Open, Close Cmd Inhibit

RSOS (1)

ALL EVAs

SM Antennas

IV
1. GTS – Deactivate
2. ARISS (Ham Radio) – Deactivate or VHF (144-146 MHz) TX only

TASK SPECIFIC INHIBITS

NTA Electrical Connections

1. RPCM P1 1A_A RPC 10 – OPEN, CL cmd INH
2. RPCM P1 2B_A RPC 11 – OPEN, CL cmd INH
3. RPCM P1 2B_C RPC 12 – OPEN, CL cmd INH
4. P1-2 MDM SDO card slot 8, ch 0-6 OPEN

EVA 2 NOTES, CAUTIONS, AND WARNINGS

NOTES

1. Bolt install: report torque and turns
2. Bolt release: report torque and turns if different from published range
3. EVA connectors: after disconnection and prior to connection; verify pin and EMI band integrity; verify connector free of FOD
4. Inspect QDs for damage prior to mating
5. Toolbox doors must be closed with one latch per door when EV crew not in immediate vicinity
6. Avoid contact with OBSS striker bars (Vitrolube coating)

CAUTION

ISS Constraints

A. Avoid inadvertent contact with
   1. Grapple fixture shafts (drylube)
   2. PIP pins
   3. EVA Crane [PMA1]
   4. TCS Reflectors [PMA2, PMA3]
   5. APAS hardware [PMA2, PMA3]
   6. CETA Lights (Z-93 paint) [LAB, S1, Node 1]
   7. Deployed MISSEs (currently none)
   8. Passive UMAs
   9. MBS VDU, MCU, CRPCMs, and Cameras (taped radiative surfaces, silver Teflon)
   10. Deployed TUS cable
   11. S0 aft face Radiator
   12. GPS Antennas (S13 paint) [S0]
   13. UHF Antennas [LAB, P1]
   14. ETCS Radiator flexhoses and panels [S1, P1]
   15. EETCS/PV Radiator flexhoses, bellows and panels [P6, P4, S4, S6]
   16. SASA RF Group [Z1, S1, P1]
   17. Heat pipe radiators [Z1]
   18. PCU cathode and HCA ports [Z1]
   19. Ku-Band Antenna (SGANT) dish [Z1]
   20. CMG cover/shells [Z1]
   21. SSRMS Cameras
   22. Open CBM petal covers and LAB window shutter

CAUTION (Cont)

ISS Constraints (Cont)

B. Electrical cables
   1. Avoid bend radii < 10 times cable diameter

C. Fiber optic cables
   1. Avoid bend radii < 10 times cable diameter
   2. Avoid pulling on cable during mate/demate

D. Fluid line flex hoses and QDs
   1. Avoid bend radii < 5 in for hoses with diameter < 1 in on LAB, S0, S1, P1, and 10 in for hoses with diameter < 1 in on all other elements
   2. Avoid bend radii < 14 in for hoses with a diameter ≥ 1 in
   3. Additional care should be taken to not exceed bend radii when applying loads at the flexible hose to rigid tube stub interfaces
   4. Ensure fluid QD booties are fully closed prior to leaving worksite; wire tie if reqd

E. For structural reasons
   1. Avoid vigorous body motions, quick grabs and kickoffs against tether restraints
   2. Avoid performing shaking motions (sinusoidal functions) more than four cycles
   3. Avoid kicking S1/P1 radiator beam
   4. If any of these occur, wait 2 to 5 min to allow structural response to dissipate

EVA 2 NOTES, CAUTIONS, AND WARNINGS (Cont)

CAUTION (Cont)

ISS Constraints (Cont)

F. Other
1. ITT Cannon connector: On demated connectors, do not rotate collar or manipulate cable/connector using collar or connector tool
2. WIS Antennas: do not use as handholds [Node 1, Lab, P6, Z1]
3. Lubricant from Ku-Band SGANT gimbals [Z1], CMGs [Z1], and RTAS Ground Strap fasteners [P6, P4, S4, S6] can contaminate EMU
4. MLI handholds are not rated for crewmember translation loads
5. CBM petal covers may not be used as handholds unless both launch restraint pins are engaged
6. Prevent inadvertent contact of the tether shuttle with ETRS when the P3/S3 Tether Shuttle Stop is raised away from the rail

CAUTION (Cont)

Shuttle Constraints

G. Avoid inadvertent contact with
1. OBSS and SRMS Composite Sections and Cable Harnesses
2. LCS (silver Teflon) and LDRI (silver Teflon) and ITVC (gold foil) [OBSS]
3. WVS Antenna [ODS Truss & PLB Sill]
4. Payload Bay wire harnesses, cables, and connectors

H. No touch
1. LDRI diffuser [OBSS]
2. OBSS saddle contacts (when OBSS unberthed) [OBSS]
3. Monkey fur [PLB]
4. Cameras: metallic surfaces [PLB]
5. Ku-Band Antenna black dish and gold thermal blankets [PLB]

EVA 2 NOTES, CAUTIONS, AND WARNINGS (Cont)

WARNING

ISS Constraints

A. Avoid inadvertent contact with
1. Grapple fixture targets and target pins
2. SSU, ECU, beta gimbal platform, mast canister, SAW blanket boxes unless the beta gimbal is locked and the motor is turned off
3. Stay inboard of SARJ when active
4. Stay 2 ft from S1/P1 radiator beam rotational envelope when beam is free to rotate
5. Stay 5 ft from moving MT on face 1

B. Handrails
1. Handrails previously used for MISSE attachment may not be used as a safety tether point [A/L endcone 564 & 566, A/L Tank 2 nad/fwd & port/fwd, P6 5389]

C. Pinch
1. NZGL connector linkage. Use caution when mating/locking
2. ITT Cannon Connector rotating housing
3. EV side of IV Hatch during Hatch operation (also snag hazard) [A/L]
4. LAB window shutter and CBM petal cover linkages during operation

D. QDs
1. If QD is in FID when valve is opened (bail fwd), QD will leak and fluid line may whip
2. Do not rotate if in mated/valve open config

WARNING

ISS Constraints (Cont)

E. RF radiation exposure
1. Stay 3.6 ft from S-Band (SASA) high gain Antenna when powered [S1, P1]
2. Stay 1.3 ft from S-Band (SASA) low gain Antenna when powered [S1, P1]
3. Stay 1 ft from UHF Antenna when powered [LAB, P1]

F. Sharp Edges
1. Inner edges of WIF sockets
2. Mating surfaces of EVA connectors. Avoid side loads during connector mating
3. Back side of MMOD shield fasteners
4. Spring loaded captive EVA fasteners (e.g., 6B-boxes, BMRRM, RTAS); the end of the spring may protrude
5. PMA umbilical launch restraints-exposed bolt threads
6. Adjustable Fuse Tether (Fish Stringer) buckles stowed in Node Bag
7. Nickel coated braided copper Ground Straps may contain frayed wires [P6, P4, S4, S6]
8. Z1 handrail 6061 by the Ku-Band boom launch restraint [Z1]
9. Solar Array Blanket Box [P6, S6]
10. Keep hands away from SSRMS LEE opening, and snares
11. Fastener threads on back of Z1 U-jumper male FQD panel, if nutplate cap missing

WARNING (Cont)

ISS Constraints (Cont)

G. Thermal
1. EVA connectors with booties may become hot if left uncovered. Handling may need to be limited
2. PMA handrails may be hot. Handling may need to be limited
3. Turn off glove heaters when comfortable temp reached to prevent bladder damage. Do not pull fingers out of gloves when heaters are on
4. Uncovered trunnion pins may be hot
5. SSRMS/MBS operating Cameras and lights may radiate large amounts of heat
6. Stay at least 1 ft away from PMAs and MMOD shields > 270 degF if EMU sun visor up
7. Stay at least 1 ft away for no more than 15 min from PMAs and MMOD shields > 300 degF if EMU sun visor up
8. Stay at least 0.5 ft away from PMA and MMOD shields > 325 degF
9. Do not touch EMU protective visor if temp has been < -134 for >15 min
10. No EMU TMG contact with PMAs and MMOD shields > 320 degF
11. No EMU boot contact with foot restraint when temp < -120 degF or > 200 degF

WARNING (Cont)

Shuttle Constraints

H. Arcing/Molten Debris
1. Stay ≥ 2 ft from exposed EFGF connector when OBSS berthed, powered, and EFGF not grappled [PLB]
2. Stay ≥ 2 ft from exposed Stbd Fwd MPM contacts [PLB]

I. Pinch
1. PRLA operation [PLB]

J. RF radiation exposure
1. Stay 3.28 ft from S-Band Antenna when powered
2. Stay 1 ft from top and side of UHF PLB Antenna radome surface when in high powered mode [ODS truss]
3. Stay 0.33 ft from top and side of UHF PLB Antenna radome surface when in low powered mode [ODS truss]
4. Remain below the level of the PLB door mold line for first 20 in aft of Fwd bulkhead when S-Band Antenna powered [PLB]
5. Remain on the inboard side of the Stbd slidewire (sill handrails if slidewire not installed) for first 20 ft aft of Fwd bulkhead when Ku-Band Antenna powered [PLB]

WARNING (Cont)

Shuttle Constraints (Cont)

K. Sharp Edges
1. PRLA grounding wipers [PLB]
2. LDRI baffles (Also an entrapment hazard) [OBSS]
3. Keep hands away from SRMS EE opening and snares

L. Thermal
1. Illuminated PLB lights; do not touch
2. OBSS grapple fixture shafts/cams may be hot. Limit handling if required
3. Stay 27 ft from PRCS when powered
4. Stay 3 ft from VRCS when powered
5. Stay 3 ft from APU when operating

M. Contamination
1. Stay out of the immediate vicinity of leaking jet or APU

N. Lasers
1. Do not look at LDRI diffuser or LCS laser aperture window

EVA 2 SUMMARY TIMELINE

TASK TIME (PET TIME) HR : MIN	IV/SSRMS	EV1 (SSRMS)	EV2 (FF)
00:00 ---	SSRMS: At APFR Ingress Posn	POST DEPRESS (00:05)	POST DEPRESS (00:05)
		A/L EGRESS (00:15)	A/L EGRESS (00:15)
		NTA REMOVAL FROM PLB (01:40) ❑ Translate to PLB; set up SSRMS	NTA REMOVAL FROM PLB (01:40) ❑ Translate to COL; stow fish stringer
	IV: ICC-lite Power – OFF SSRMS: GCA to PLB NTA RMVL Posn	❑ Release PLB NTA from FSE	❑ Assist with PLB NTA Release
01:00 --			
	SSRMS: Mnvr to P1 NTA Install Posn	❑ Maneuver to P1	❑ Install COL trunnion cover (expect port forward)
	IV: ICC-lite Power – ON		❑ Translate to P1: config CETA cart for arm clearance
02:00 --		P1 NTA INSTALL (01:55)	P1 NTA INSTALL (01:55)
	SSRMS: GCA to CETA cart zenith	❑ GCA SSRMS for NTA stow on CETA cart zenith	❑ Assist with NTA swaps
	SSRMS: GCA to P1 NTA	❑ GCA SSRMS to P1 NTA; release from truss	
	SSRMS: GCA to CETA cart nadir	❑ GCA SSRMS for NTA stow on CETA cart nadir	
	SSRMS: GCA to CETA cart zenith NTA	❑ GCA SSRMS to CETA cart zenith NTA; release	
	SSRMS: GCA to P1 NTA Install	❑ GCA SSRMS to install NTA in P1; secure bolts	❑ Mate N2 Lines
03:00 --			
		❑ Mate NTA electricals	
		❑ GCA SSRMS to CETA cart nadir NTA; release	❑ Assist with NTA release
	MCC-H: NTA Power up	❑ Maneuver to PLB	❑ Retrieve MBM, MB; translate to Airlock
	SSRMS: GCA to CETA cart nadir NTA		❑ Stow items at Airlock; translate to PLB
	SSRMS: Mnvr to PLB NTA Install Posn		
04:00 --		NTA STOW IN PLB (00:50)	NTA STOW IN PLB (00:50)
	IV: ICC-lite Power – OFF	❑ GCA SSRMS for NTA Install on FSE; secure bolts	❑ Translate to PLB
			❑ Reinstall PLB NTA MLI
	SSRMS: GCA to PLB APFR Egress Posn	❑ GCA SSRMS for Egress	
	IV: ICC-lite Power – ON	❑ Egress; reconfig APFR	
		SSPTS CABLE ROUTING (01:10)	SSPTS CABLE ROUTING (01:10)
05:00 ---		❑ Install remaining COL trunnion covers	❑ Install remaining COL trunnion covers
		❑ Route and mate SSPTS cables	❑ Route and mate SSPTS cables
		CLEAN UP and A/L INGRESS (00:30)	CLEAN UP and A/L INGRESS (00:30)
06:00 ---		❑ Translate to Airlock with NTA bag; ingress	❑ Translate to Airlock; ingress
	EVA Time 06:30	PRE REPRESS (00:05)	PRE REPRESS (00:05)

EVA 2 EGRESS (00:15)

IV/SSRMS	EV1	EV2
	Initial Config: Left waist tether on fwd UIA tether point	Initial Config: Left waist tether on EVA hatch D-ring extender
	EGRESS (00:15)	EGRESS (00:15)
		1. Thermal cover – open 2. Egress Airlock 3. Retrieve Node 2 safety tether (fwd; stbd routed); inspect load alleviating strap for damage 4. Attach safety tether load strap to right D-ring ext 5. Engage load strap hook slide lock – L • √Safety tether reel unlocked
	1. Release EV2 waist tether; transfer to EV2 2. Transfer NTA crewlock bag (w/fish stringer) to EV2	6. Receive left waist tether; stow 7. Receive NTA crewlock bag from EV1 8. Stow bag w/fish stringer on BRT 9. Retrieve Node 2 safety tether (aft; port routed); inspect load alleviating strap for damage
	3. Receive Node 2 (aft; port routed) safety tether from EV2 4. Attach safety tether load strap to right D-ring ext 5. Engage load strap hook slide lock – L • √Safety tether reel unlocked 6. Retrieve waist tether; stow 7. Extend bag rets to airlock D-ring extender 8. Egress Airlock	10. Transfer safety tether to EV1
IV: WVS Software: Select page – RF camera Select “Advanced Controls” S-Band Level (two) – Max	9. Check EV2 tether and SAFER config • √SAFER MAN ISOL vlv – Open (dn) • √SAFER HCM – Closed (dn) 10. Close thermal cover	11. Check EV1 tether and SAFER config • √SAFER MAN ISOL vlv – Open (dn) • √SAFER HCM – Closed (dn)

NTA REMOVE FROM PLB (01:40)

IV/SSRMS	EV1	EV2
Initial config: SSRMS: At PLB APFR install location	SETUP (00:30) 1. Translate to Node 2 WIF 14 (nadir route) 2. Verify Safety Tether Anchor hook locked 3. Configure APFR **[--, PP, F, 6]** 4. Retrieve APFR; stow on BRT	SETUP (00:30) 1. Translate to Node 2 (stbd route) 2. Verify Safety Tether Anchor hook locked 3. Temp stow Trunnion Cover fish stringer on COL HRs 905-908
	WARNING Avoid contact with grapple fixture shaft and target pin	
	5. Translate on Node 2 to nadir, then to PMA 6. Translate to PLB • Fairlead in PLB fwd port	4. Translate to PLB • Fairlead in PLB fwd stbd
	CAUTION Avoid contact with ESA payload hardware above the FRAM	
1. SSRMS: GCA for APFR install 2. IV: Power off ICC-lite heaters: R1 PL AFT MN B – OFF	7. Translate to APFR setup position ICC fwd 8. GCA SSRMS; install APFR [**12**, PP,F,6] Move APFR safety tether anchor hook to SSRMS HR 9. Inspect gloves; status MCC on RTV and Vectran state RELEASE PLB NTA FROM FSE (00:40) 10. Translate to fwd port side of ICC 11. Open NTA MLI 1/4 turn fasteners 12. Loosen Velcro to open flap B (fwd stbd corner) 13. Remove MLI tent (stbd to port); attempt to keep tent intact 14. Secure MLI tent to furthest port HR on ICC edge using Adj tether 15. Inspect load alleviating strap on 55-ft tether 16. Perform safety tether swap onto SSRMS • Verify load strap hook slide lock – L • √Safety tether reel unlocked • √Anchor hook locked	5. Temp stow NTA bag on ICC top, stbd; or fwd HR 6. Retrieve TM from NTA bag 7. Inspect gloves; status MCC on RTV and Vectran state RELEASE PLB NTA FROM FSE (00:40) 8. Install TM on NTA bolt; √Anti-Backlash Neutral **PGT [B7 (25.5 ft-lb), CCW2, 30.5], no socket** Drive Bolts (4) 5 turns: ❑ NTA Bolt 4 ❑ NTA Bolt 3 ❑ NTA Bolt 2 ❑ NTA Bolt 1 9. Remove TM, stow in NTA bag; retrieve scoop 10. Translate to ICC aft; install adj to secure MLI

NTA REMOVE FROM PLB (01:40) (Cont)

IV/SSRMS	EV1	EV2
	17. Temp stow Node 2 safety tether on port sill 18. Attach waist tether to APFR boot plate	
3. SSRMS: Ingress position	19. GCA SSRMS for ingress 20. Ingress APFR	
4. SSRMS: NTA bolt release positions	21. GCA SSRMS for NTA bolt release 22. Install 7.8-Ext 5/8 socket on PGT; perform pull test 23. PGT **[B7 (25.5 ft-lbs), CCW2, 30.5], 7.8 ext 5/8** Release NTA bolts (4), ~14.5-16 turns (bolts will spring out) ❑ NTA Bolt 4 ❑ NTA Bolt 3 ❑ NTA Bolt 2 (GCA SSRMS) 24. Receive scoop ret; attach to MWS ❑ NTA Bolt 1 25. Stow PGT (leave socket on PGT) 26. GCA SSRMS for NTA handrail access 27. On EV2 GO: Pull NTA from FSE (limit loads into scoop)	11. Install round scoop w/RET on NTA bolt 4 once released (scoop handle into PLB) 12. Release scoop RET from MWS; transfer to EV1 13. Assist EV1
5. SSRMS: Slow back-away for NTA removal	28. Give SSRMS GO for slow backaway 29. Verify NTA clear of ICC 30. Verify all tethers clear	14. Verify NTA clear of ICC 15. Verify all tethers clear
	<u>MANEUVER TO P1</u> (00:30)	<u>MANEUVER TO P1</u> (00:30)
6. SSRMS: Mnvr EV1 and NTA to P1 7. IV: Power on ICC-lite heaters: R1 PL AFT MN B – ON	31. Give SSRMS GO for mnvr to P1 (~30 min) 32. Roll NTA ~90 deg ccw	16. Translate to EV1 safety tether on port sill; retrieve tether 17. Release EV1 tether line from ODS fairlead 18. Translate to PMA; temp stow EV1's safety tether Release own tether line from ODS fairlead 19. Translate to COL HR 905 fish stringer; retrieve: ❑ Fwd, port trunnion and pin cover set ❑ T-handle tool ❑ 2 adj tethers 20. Translate to COL HR 0901 21. Install trunnion scuff plate and pin cover 22. Verify good mate of Velcro on plate and pin 23. Translate to port side of P1 NTA or Lab strut HR • Fairlead on S0 HR 3415 24. Rotate CETA cart 2 brake handles to horizontal 25. Engage CETA 2 parking brake (left handle) 26. Loosen swingarm ballstack

NTA REMOVE FROM PLB – TASK DATA SHEET

Estimated Task Duration:

	With SSRMS	Without SSRMS
Two EV Crew	01:50	NA

Tools:

EV1	EV2	
• RET • BRT • PGT 7.8-ext 5/8	• RET • BRT • TM	• MCF Scoop

Foot Restraints:

Task	WIF	Setting
NTA Removal	SSRMS	12,PP,F,6

EVA Fasteners:

Fastener Name	Head Size	Qty	Install Torque (ft-lb)	Release Torque (ft-lb)	Failure Torque (ft-lb)	Turns
NTA Bolt release ICC	5/8	4		127.5	186.5	15.5 -17
NTA Bolt Engage ICC	5/8	4	16 init 30.5 fin		47.6	15.5 -17

ORU Identification:

ORU	Part number	Serial Number
PLB NTA	1F96000-1	0003 (P1↓) 0004 (PLB↑)

ORU mass: 546 lbs (full)

Connector Inhibits:

Task	Inhibit
NTA remove from ICC FSE	ICC-Lite Heater Power: R1 PL AFT MN B – OFF

Notes:

1. None

Cautions:

1. Avoid contact with payload hardware above the FRAM
2. Avoid pulling electrical cables. Avoid bend radii less than 10 times the cable diameter

Warnings:

1. Avoid contact with grapple fixture shaft and target pin

P1 NTA INSTALL (01:55)

IV/SSRMS	EV1	EV2
	TEMP STOW NEW NTA (00:10)	TEMP STOW NEW NTA (00:10)
		WARNING NTA fluid QD lines and clamps may be hot if exposed to direct sun. Avoid contact with hardware until shaded ~20 min
	1. GCA SSRMS to temp stow position (CETA 2 zenith STBD swingarm)	1. Position self on CETA zenith side
	2. Present NTA aft handrail to EV2	2. Attach MUT EE to NTA aft handrail 3. Position NTA 4. Tighten ballstack
	3. Assist EV2 to position NTA 4. Remove scoop from NTA bolt 4; stow on MWS 5. Verify clear of NTA	5. Transfer adj from MUT-Ballstack to NTA
	6. Inspect gloves; status MCC on RTV and Vectran state	6. Inspect gloves; status MCC on RTV and Vectran state
	P1 NTA REMOVE FROM TRUSS (00:20)	P1 NTA REMOVE FROM TRUSS (00:20)
1. SSRMS: GCA for P1 NTA bolt release	7. GCA SSRMS to P1 NTA bolt release	7. Fairlead safety tether on HR 3652 (P1, face 6, below CETA 1) to keep NTA truss bay clear
	8. **PGT [B7 (25.5 ft-lbs), CCW2, 30.5], 7.8 ext 5/8** Release Bolts 1-4, 15 -17.5 turns (bolt will spring out) ❑ NTA Bolt 4 ❑ NTA Bolt 3 (Install scoop onto NTA bolt 4) ❑ NTA Bolt 2 ❑ NTA Bolt 1 9. Stow PGT (leave socket on PGT) 10. Retract NTA soft dock (pull and rotate to retract pin) 11. Verify NTA bottom MLI clear of rails	8. Translate to P1 NTA
2. SSRMS: GCA for NTA remove 3. SSRMS: GCA for NTA temp stow	12. GCA SSRMS to slowly pull NTA from truss 13. GCA SSRMS to CETA nadir temp stow location	9. Verify soft dock does not catch NTA bracket 10. Reposition self for NTA temp stow on MBM (CETA nadir)
	14. Present NTA aft handrail to EV2 15. Assist EV2 to position NTA	11. Attach MUT EE to NTA aft handrail 12. Position NTA
	16. Remove scoop; stow on MWS	13. Tighten ballstack 14. Transfer MUT-Ballstack-MUT adj to NTA

P1 NTA INSTALL (01:55) (Cont)

IV/SSRMS	EV1	EV2
4. Verify with MCC, P1 TRRJ rotated and DLAs configured for EV access to NTA N2 lines	NEW NTA RETRIEVE (00:10) 17. GCA SSRMS for new NTA retrieve (zenith STBD swingarm) 18. Install scoop on NTA bolt 4 19. Give EV2 GO for NTA release	NEW NTA RETRIEVE (00:10) 15. Reposition for new NTA retrieve 16. On EV1 GO, release MUT and adj from NTA
5. SSRMS: GCA for NTA install	NTA INSTALL IN TRUSS (00:30) 20. GCA SSRMS into position for NTA install 21. Install NTA fully into truss (scoop zenith side) 22. Extend NTA soft dock pin 23. Remove scoop; stow on MWS 24. Inspect gloves; status MCC on RTV and Vectran state 25. GCA SSRMS for NTA bolt drive	NTA N2 LINE CONNECT (00:30) 17. Assist EV1 with GCA 18. Inspect gloves; status MCC on RTV and Vectran state 19. Remove fairlead on HR 3652 20. Translate to P1 bay 6, face 4 • Via HR 3652 nadir of CETA 1 (outboard)
6. SSRMS: GCA for NTA Bolts 7. Record NTA Bolt turns and torque: Bolt / Green LED / Turns/Torque 4 ❑ _____/_____ 1 ❑ _____/_____ 2 ❑ _____/_____ 3 ❑ _____/_____	NOTE NTA bolts must be fastened in sequence: bolt 4, 1, then 2/3. NTA Bolt 4 is secured into the tight tolerance bolt hole 26. **PGT [B6 (24.0 ft-lb), CW2, 30.5], 7.8 ext 5/8** Drive NTA Bolts, 15-17.5 turns ❑ Bolt 4 ❑ Bolt 1 ❑ Bolt 2 ❑ Bolt 3 27. Stow PGT (leave socket on PGT) CAUTION Avoid pulling electrical cables. Avoid bend radii less than 10 times the cable diameter NOTE √Connectors for straight pins, no FOD, EMI band intact, and good bend radius	21. Open thermal shroud by sliding from nadir to zenith along guide straps CAUTION The fluid line clamp nearest the line origin at the NTA must remain closed to prevent crimping NOTE Ensure Fluid QD lines routed under shroud straps 22. Open 3 zenith fluid line clamps 23. On IV GO, demate zenith NTA fluid QD **(F2/M3/M2)** from dummy receptacle NTA M3 • Open QD Booty • Verify fwd white band visible • Verify the detent button fully installed and up • Verify detent button can be depressed • Verify no side loads

P1 NTA INSTALL (01:55) (Cont)

IV/SSRMS	EV1	EV2
8. SSRMS: GCA for electrical connections 9. Verify NTA inhibits in place: give EV1 GO for connector mate RPCM P1 1A_A RPC 10 – OPEN, CL cmd INH RPCM P1 2B_A RPC 11 – OPEN, CL cmd INH RPCM P1 2B_C RPC 12 – OPEN, CL cmd INH P1-2 MDM SDO card slot 8, ch 0 thru 6 – op 10. Record WVS closeout images 11. Give MCC GO for P1 NTA Power-up 12. SSRMS: GCA to CETA nadir NTA retrieve position	28. GCA SSRMS for electrical cable ops 29. Remove caps from NTA J01, J02, and J03; temp stow in trash bag, BRT, and MWS 30. Retrieve temp stowed electrical cables; stow wire tie left on EVA 1 31. On IV GO: Inspect and mate NTA electrical connectors: ❑ P1-P631 to NTA J01 ❑ P1-P632 to NTA J02 ❑ P1-P633 to NTA J03 32. Route cables and close clamps (6) around electrical cables 33. Inform IV: Bolts and electrical connectors complete 34. WVS survey of NTA <u>RETRIEVE OLD NTA FROM CETA</u> (00:10) 35. GCA SSRMS to CETA cart nadir for NTA retrieve 36. Install scoop on NTA bolt 4 37. Inspect and install caps on returning NTA J01, J02, and J03 (cloverleaf caps on J01,J02) 38. Inspect gloves; status MCC on RTV and Vectran state	• Demate QD by pulling back on release ring and pulling QD off • Verify fwd white band not visible 24. On IV GO: Mate QD **(F2/M3/M2)** on ATA connector M2 • Inspect QD for debris and damage • √Detent button up • √Fwd white band not visible • √No side loads • Mate QD and verify fwd white band visible • Snap back test – verify release ring snaps back out and fwd white band still visible • Perform pull test • Perform gap check for FID • Open valve: Depress detent button and push bail to fwd position • √Aft white band visible • √Detent button pops back up • Close QD booty; verify Velcro secure 25. Close line clamps (3) <u>CAUTION</u> The fluid line clamp nearest the line origin at the NTA must remain closed to prevent crimping 26. Open 3 nadir fluid line clamps 27. Demate nadir NTA fluid line QD **(F1/M2/M1)** from NTA dummy receptacle M2 • Open QD booty • Verify fwd white band visible • Verify detent button fully installed and up • Verify detent button can be depressed • Verify no side loads • Demate QD by pulling back on release ring and pulling QD off • Verify fwd white band not visible

P1 NTA INSTALL (01:55) (Cont)

IV/SSRMS	EV1	EV2
		28. Mate NTA QD **(F1/M2/M1)** to ATA M1 • Inspect QD for debris and damage • √Detent button up • √Fwd white band not visible • √No side loads • Mate QD and verify fwd white band visible • Snap back test – verify release ring snaps back out and fwd white band still visible • Perform pull test • Perform gap check for FID • Open valve: Depress detent button and push bail to fwd position • √Aft white band visible • √Detent button pops back up • Close QD booty; verify Velcro closed
13. Record WVS closeout imagery		29. Close line clamps (3) 30. WVS survey of NTA and ATA 31. Close P1 thermal shroud 32. Inform IV fluid QD connection complete 33. Translate to CETA cart
		<u>RETRIEVE OLD NTA FROM CETA</u> (00:10) 34. Position self for NTA release (CETA nadir) 35. On EV1 GO, release adj then MBM from NTA 36. Verify NTA clear
	39. Hold NTA, give EV2 GO for MBM release 40. Verify NTA clear	
	<u>MNVR TO PLB</u> (00:35)	<u>MNVR TO PLB</u> (00:35)
14. SSRMS: On EV1 GO, mnvr to PLB	41. Give SSRMS GO for mnvr to PLB (~30 min)	37. Once NTA clear, rotate CETA brake handles to vertical 38. Release CETA 2 parking brake (press pedal twice) 39. Retrieve MBMs and Adj tethers (4); secure one ballstack on BRT and one on MWS 40. Verify worksite clear 41. Inspect gloves; status MCC on RTV and Vectran state 42. Release fairleads; translate to Airlock 43. Stow MBMs and tethers 44. Close thermal cover 45. Translate to PMA; retrieve EV1 safety tether 46. Route EV1 safety tether line thru port ODS fairlead 47. Install EV1 safety tether on sill port of ICC 48. Translate to PLB ICC stbd

P1 NTA INSTALL – TASK DATA SHEET

Estimated Task Duration:

	With SRMS	Without SRMS
One EV Crew	N/A	N/A
Two EV Crew	N/A	02:15

Tools:

EV1	EV2
• BRT • RET • TM • PGT 7.8-Ext 5/8 • Round Scoop	• BRT • RET

Foot Restraints:

Task	WIF	APFR Setting
NTA Removal	SSRMS	12,PP,F,6
Cont NTA hold	CETA 2 WIF 3	(12, GG) 1, NN, J, 7

EVA Connectors:

Harness	To	Clamps (#)	Conn size	Function
P1-P631	NTA J1	2	15	Data
P1-P632	NTA J2	1	15	Data
P1-P633	NTA J3	3	17	Power

EVA Fluid QDs (new tank):

Line Name	From	To	Clamps (#)	QD Size	Function
(F2/M3/M2)	NTA Dummy M3	ATA QD M2	3	¼ inch	Nitrogen pressure
(F1/M2/M1)	NTA Dummy M2	ATA QD M1	3	¼ inch	Nitrogen pressure

Connector Inhibits:

Task	Inhibit
P1-631 to NTA J1	None required
P1-632 to NTA J2	None required
P1-633 to NTA J3	RPCM P1 1A_A RPC 10 – OPEN, CL cmd INH RPCM P1 2B_A RPC 11 – OPEN, CL cmd INH RPCM P1 2B_C RPC 12 – OPEN, CL cmd INH P1-2 MDM SDO card slot 8, ch 0 thru 6 – op

EVA Fasteners:

Fastener Name	Head Size	Qty	Install Torque (ft-lb)	Release Torque (ft-lb)	Failure Torque (ft-lb)	Turns
NTA Bolts Release P1	5/8	4		127.5	186.5	15-17.5
NTA Bolts Engage P1	5/8	4	24		47.9	15-17.5

ORU Identification:

ORU	Part number	Serial Number
PLB NTA (new)	1F96000-1	0004
P1 NTA (old)	1F96000-1	0003

Notes:

1. Ensure Fluid QD lines routed under shroud straps
2. Part numbers for the NTA caps
   2 each NGZL-RPC-N-15-0-LP (cloverleaf)
   1 each NGZL-RPC-N-17-0-MS (gas cap)

Cautions:

1. NTA Fluid QD lines and clamps may be hot if exposed to direct sun. Avoid contact with hardware until shaded ~20 min
2. Avoid pulling electrical cables. Avoid bend radii less than 10 times the cable diameter
3. The fluid line clamp nearest the line origin at the NTA must remain closed to prevent crimping

Warnings:

1. Verify electrical inhibits in place prior to connector mates
2. Verify TRRJ anti-rotation inhibits in place for N2 line access

P1 NTA INSTALL – TASK DATA SHEET (Cont)

Nitrogen Tank Assembly (front side: electrical connectors and bolts)

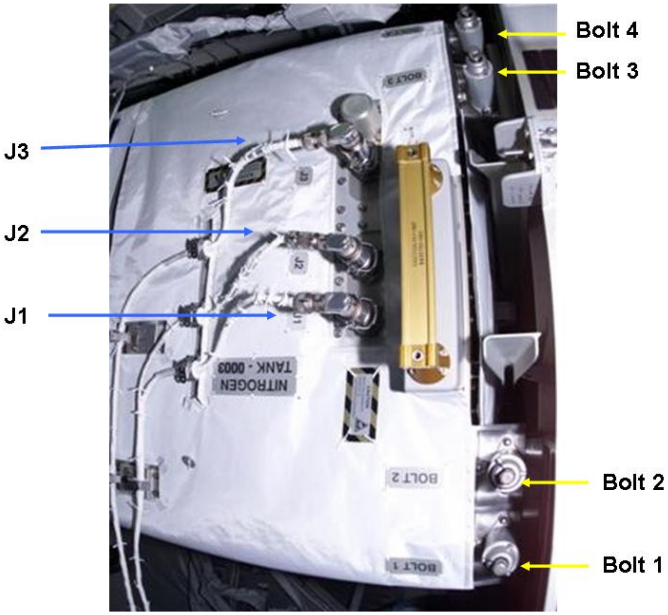

NTA – Aft side, Fluid QDs

Fluid QD line names by NTA

Old P1	New P1
F173 (nadir)	F1/M2/M1 (nadir)
F172 (zenith)	F2/M3/M2 (zenith)

Two N2 fluid QD lines on the aft face of the NTA connect to the ATA on truss face 4

TA clamp nearest each line origin must remain closed

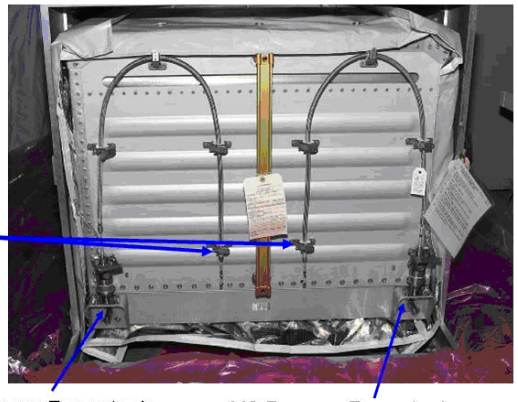

M3 Dummy Receptacle

M2 Dummy Receptacle

NTAs on Ballstacks

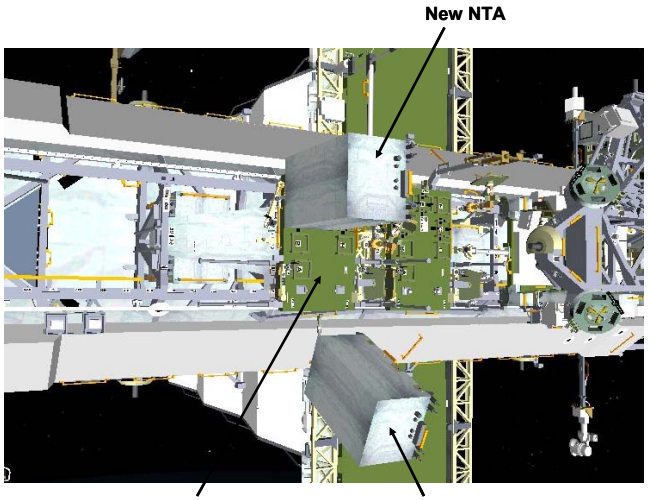

NTA Contingency Hold APFR Position

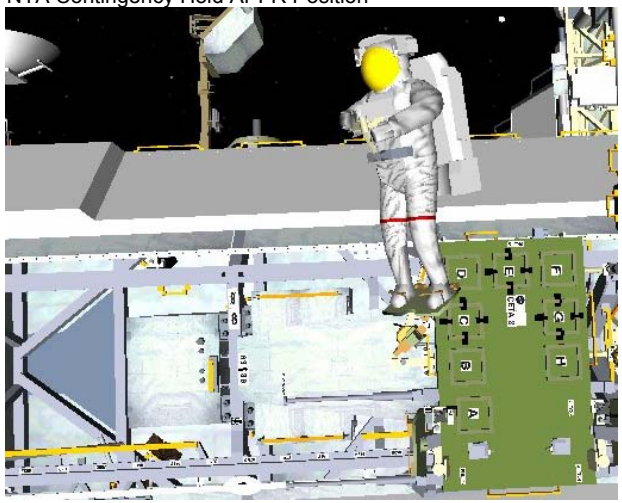

NTA STOW IN PLB (00:50)

IV/SSRMS	EV1	EV2
1. Power off ICC heaters: R1 PL AFT MN B – OFF	NTA INSTALL IN PLB (00:50)	NTA INSTALL IN PLB (00:50)
2. SSRMS: GCA for NTA install	1. Rotate NTA 90 deg cw 2. GCA SSRMS for NTA install 3. Verify NTA rails clear 4. Fully install NTA on the ICC FSE (no soft dock) 5. RET to NTA 6. Remove scoop from NTA bolt 4; transfer to EV2 with RET	1. Receive scoop from EV1; temp stow 2. Translate to NTA bag; stow scoop
3. Record NTA Bolt PGT torque and turns: Bolt / Grn LED / Torque/Turns 4 ❑ _____/_____ 1 ❑ _____/_____ 2 ❑ _____/_____ 3 ❑ _____/_____	NOTE The NTA bolts must be fastened in sequence: bolt 4, 1, then 2/3. NTA Bolt 4 is secured into the tight tolerance bolt hole 7. **PGT [B2 (16.0 ft-lb), CW2, 30.5], 7.8 ext 5/8** Drive NTA bolts, 15.5-17 turns ❑ Bolt 4 ❑ Bolt 1 (GCA SSRMS to bolt 1/2) ❑ Bolt 2	
4. Record PGT manual ratchet: Bolt 1 ❑ Bolt 2 ❑ Bolt 3 ❑ Bolt 4 ❑	8. Cycle PGT Ratchet collar to RCW; verify MTL = 30.5 9. Using manual ratchet, drive NTA bolts 1 and 2 to MTL slip 10. GCA to NTA bolts 3/4 11. Cycle PGT ratchet collar to MTR 12. **PGT [B2 (16.0 ft-lb), CW2, 30.5], 7.8 ext 5/8** Drive NTA bolt 3, 15.5-17 turns ❑ Bolt 3 13. Cycle PGT Ratchet collar to RCW, 30.5 MTL 14. Using manual ratchet, drive NTA bolts 3 and 4 to MTL slip 15. Cycle PGT ratchet collar to MTR 16. Remove 7.8-ext 5/8 socket; stow on caddy 17. Stow PGT 18. Release RET from NTA	

NTA STOW IN PLB (00:50) (Cont)

IV/SSRMS	EV1	EV2
5. Record WVS closeout imagery 6. Power on ICC heaters: R1 PL AFT MNB – ON	19. Give SSRMS GO for mnvr to egress position 20. GCA SSRMS for egress 21. Egress SSRMS 22. Remove waist tether 23. Perform safety tether swap onto Node 2 safety tether • Verify load strap hook slide lock – L • √Safety tether reel unlocked 24. Secure SSRMS safety tether load strap to APFR HR 25. GCA SSRMS for APFR config; reconfig to low profile **[6, TT, F, 6]** 26. Verify SSRMS clear 27. Give IV GO to back away SSRMS 28. Stow adj tether and socket caddy in NTA bag 29. Perform NTA Bag inventory: scoop, TM, wire tie caddies (2), socket caddies (2), adj tether, camera 30. Retrieve NTA bag 31. Inspect gloves; status MCC on RTV and Vectran state	3. WVS survey of NTA on ICC 4. Translate to ICC fwd, port 5. Release adjustable tethers securing MLI; temp stow on MWS 6. Pull MLI tent over NTA 7. Close flap B on fwd, stbd corner 8. Secure quarter turn fasteners 9. Inspect gloves; status MCC on RTV and Vectran state

NTA STOW IN PLB – TASK DATA SHEET

Estimated Task Duration:

	With SSRMS	Without SSRMS
Two EV Crew	00:50	N/A

Tools:

EV1	EV2
• RET • PGT 7.8-Ext 5/8 • Round scoop	• BRT • TM • PGT

Foot Restraints:

Task	WIF	Setting
NTA Stow	SSRMS	12,PP,F,6

EVA Fasteners:

Fastener Name	Head Size	Qty	Install Torque (ft-lb)	Release Torque (ft-lb)	Failure Torque (ft-lb)	Turns
NTA bolts ICC init	5/8	4	16	N/A	47.6	
NTA bolts ICC fin	5/8	4	30.5	N/A	47.6	15.5-17 (total)

ORU Identification:

ORU	Part number	Serial Number
Returning NTA	1F96000-1	0003

Connector Inhibits:

Task	Inhibit
NTA install on ICC FSE	ICC-Lite Heater Power: R1 PL AFT MN B – OFF

Notes:

1. The NTA bolts must be fastened in sequence: bolt 4, 1, then 2/3. NTA Bolt 4 is secured into the tight tolerance bolt hole

Cautions:

1. None

Warnings:

1. None

SSPTS CABLE ROUTING (01:10)

IV/SSRMS	EV1	EV2
1. IV: Verify with MCC-H inhibits still in place for SSPTS Cable Routing RPCM LA2A3B_D RPC 1 – Open, Close Cmd Inhibit RPCM LA1A4A_D RPC 3 – Open, Close Cmd Inhibit RPCM Z13B_A RPC 2 – Open, Close Cmd Inhibit RPCM Z14B_A RPC 2 – Open, Close Cmd Inhibit	SSPTS CABLE ROUTING (01:10) 1. Translate to Lab fwd endcone, zenith • Retrieve PLB fairlead; translate port side to Lab 2. Temp stow NTA bag near SSPTS worksite WARNING Verify inhibits in place prior to mating SSPTS electric connectors PMA umbilical launch restraints-exposed bolt threads may have sharp edges CAUTION Minimize translational use of the stove pipe brackets Watch clearances to orbiter during SSPTS cable activities NOTE √Connectors for straight pins, no FOD, EMI band intact, and good bend radius	COLUMBUS TRUNNION COVER INSTALL (00:30) 1. Translate to COL HR 905 fish stringer • Retrieve PLB fairlead • Retrieve aft, port trunnion and pin cover set 2. Translate to NODE 2 HR 0338 (BRT) 3. Install trunnion scuff plate and pin cover 4. Verify good mate of Velcro on plate and pin 5. Retrieve aft, stbd trunnion and pin cover set 6. Translate to COL HR 0943 7. Install trunnion scuff plate and pin cover 8. Verify good mate of Velcro on plate and pin 9. Retrieve fwd, stbd trunnion and pin cover set 10. Translate to COL HR 0938 11. Install trunnion scuff plate and pin cover 12. Verify good mate of Velcro on plate and pin 13. Translate to fish stringer; stow T-handle tool and 2 adj tethers 14. Retrieve FS; translate to W9302 SSPTS cable bag (Lab fwd endcone, zenith) 15. Stow FS in NTA bag SSPTS CABLE ROUTING (00:40) 16. Assist EV1 w/SSPTS cable routing

SSPTS CABLE ROUTING (01:10) (Cont)

IV/SSRMS	EV1	EV2
2. Record WVS closeout imagery 3. Record WVS closeout imagery	3. Translate to W9302 SSPTS cable bag (Lab fwd endcone, zenith) 4. Retrieve wire-tie caddy from NTA bag 5. Release cable from bag (leave bag at lab location) 6. Translate with cable across Node 2 to PMA (zenith route) 7. On IV GO, release TA clamp (and wire tie if necessary) around P3 connector; pull back booty, if reqd. Stow wire tie in trash bag, if reqd 8. Inspect and mate cable J3A to connector P3; BRT to PMA2 HR 0408 if needed 9. WVS survey of SSPTS connectors 10. Pull P3 booty over connectors 11. Wire tie cable to handrails on way back to Lab HR 272 (last previously installed cable wire tie) ❑ CBM Skirt (Stovepipe) or HR 0325 ❑ HR 0319 ❑ HR 0344 ❑ HR 0369 ❑ Avoid camera stanchion and connectors on Node 2 zenith, aft 12. Retrieve second wire-tie caddy from NTA bag, if reqd 13. Translate to W9303 SSPTS cable bag (Lab fwd endcone, STBD) 14. Release cable from bag (leave bag at lab location) 15. Translate with cable across Node 2 to PMA (nadir route) 16. Release P16 from wire tie; stow wire tie in trash bag 17. Pull back P16 booty as reqd 18. Inspect and mate cable J16A to connector P16; BRT to PMA2 HR 0407 if needed 19. WVS survey of SSPTS connectors 20. Pull P16 booty over connectors 21. Wire tie cable to handrails on way back to Lab ❑ CBM Skirt (Stovepipe) ❑ HR 0311 ❑ HR 0347 ❑ HR 0334 22. Inform MCC SSPTS cable routing complete 23. Inspect gloves; status MCC on RTV and Vectran	17. Close cable bag; secure Velcro 18. Close cable bag; secure Velcro 19. Inspect gloves; status MCC on RTV and Vectran state

SSPTS CABLE ROUTING – TASK DATA SHEET

Estimated Task Duration:

	With SRMS	Without SRMS
One EV Crew	N/A	TBD
Two EV Crew	N/A	00:40

Tools:

EV1	EV2
• Wire-Tie caddy	•

Foot Restraints: N/A

Task	WIF	Setting
N/A		

EVA Fasteners: N/A

Fastener Name	Head Size	Qty	Install Torque (ft-lb)	Release Torque (ft-lb)	Failure Torque (ft-lb)	Turns
N/A						

Connector Inhibits:

Task	Inhibit
W9302 J3A mate to P3	RPCM LA1A4A_D RPC 3 – Open, Close Cmd Inhibit RPCM Z14B_A RPC 2 – Open, Close Cmd Inhibit
W9303 J16A to P16	RPCM LA2A3B_D RPC 1 – Open, Close Cmd Inhibit RPCM Z13B_A RPC 2 – Open, Close Cmd Inhibit

EVA Connectors:

Harness	To	Clamps (#)	Conn size	Function
W9302 J3A	PMA2 P3	N/A	25	Power – CH 1/4 to OPCU-2
W9303 J16A	PMA2 P16	N/A	25	Power – CH 2/3 to OPCU-1

Notes:
1. None

Cautions:
1. Minimize translational use of the stove pipe brackets
2. Watch clearances to orbiter during SSPTS cable activities

Warnings:
1. Verify inhibits in place prior to mating electrical connectors
2. PMA umbilical launch restraints-exposed bolt threads may have sharp edges

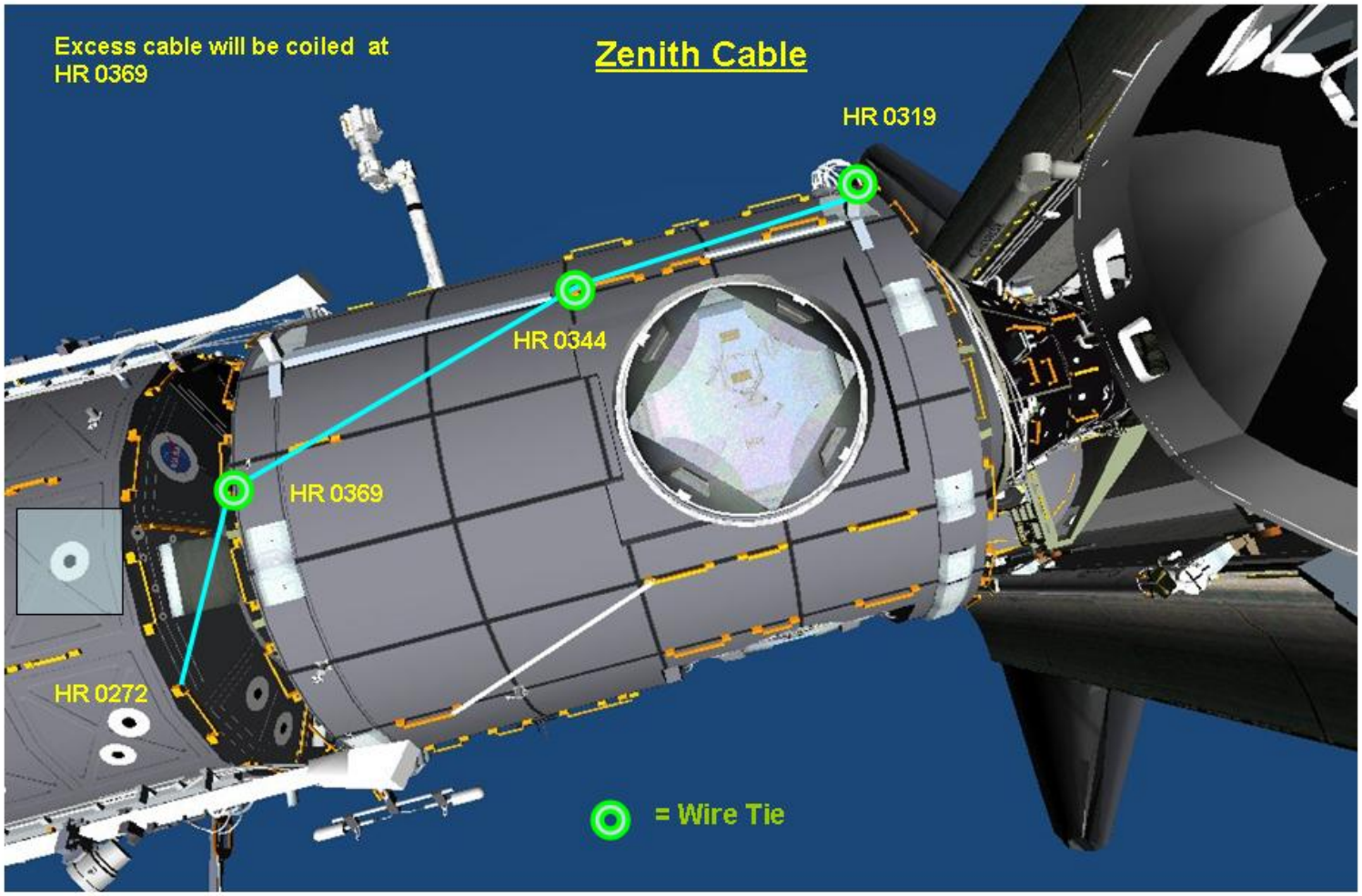

Zenith SSPTS cable (W9302) routing and wire tie locations across Node 2

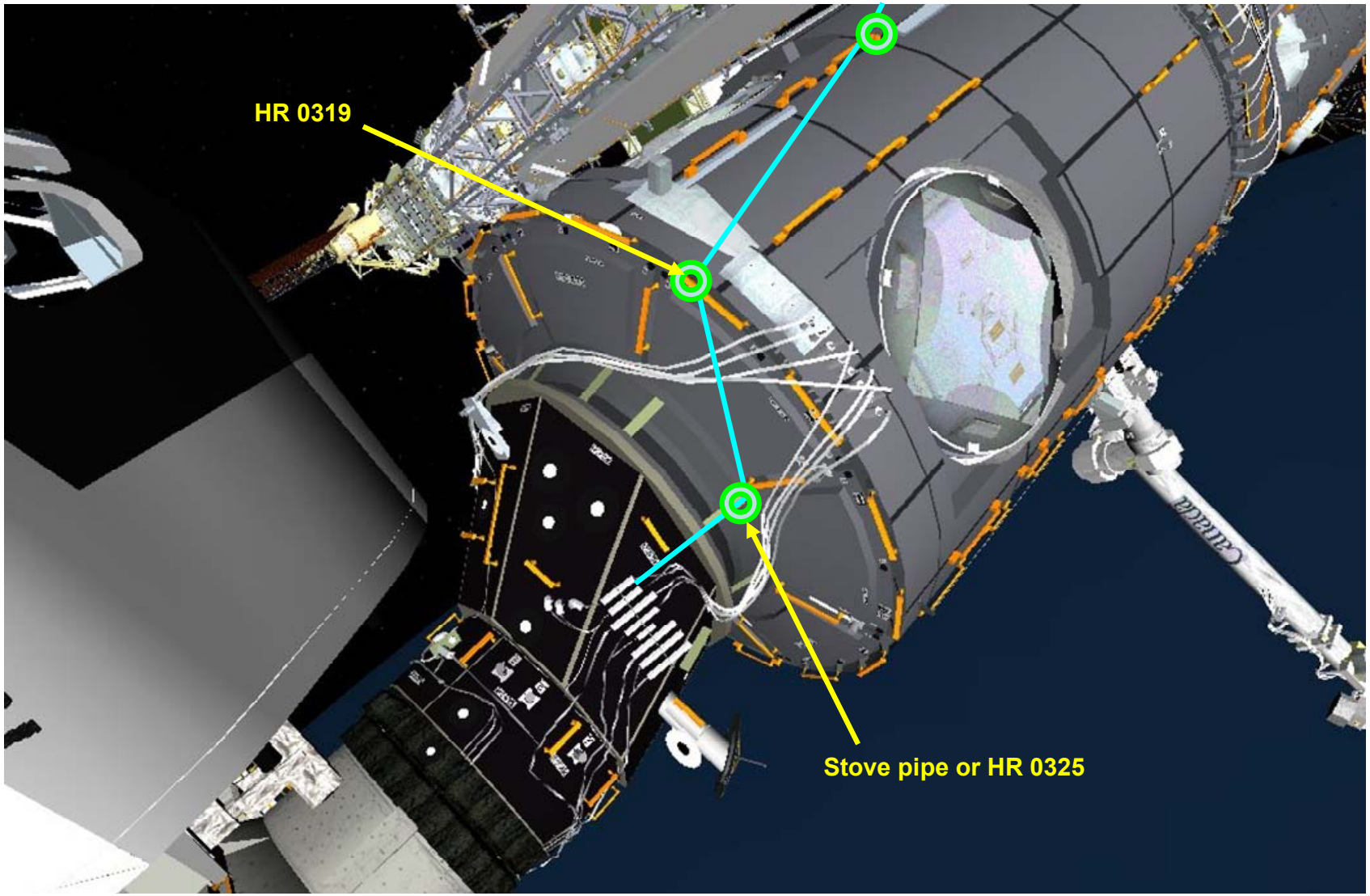

Zenith SSPTS Cable (W9302) routing onto PMA

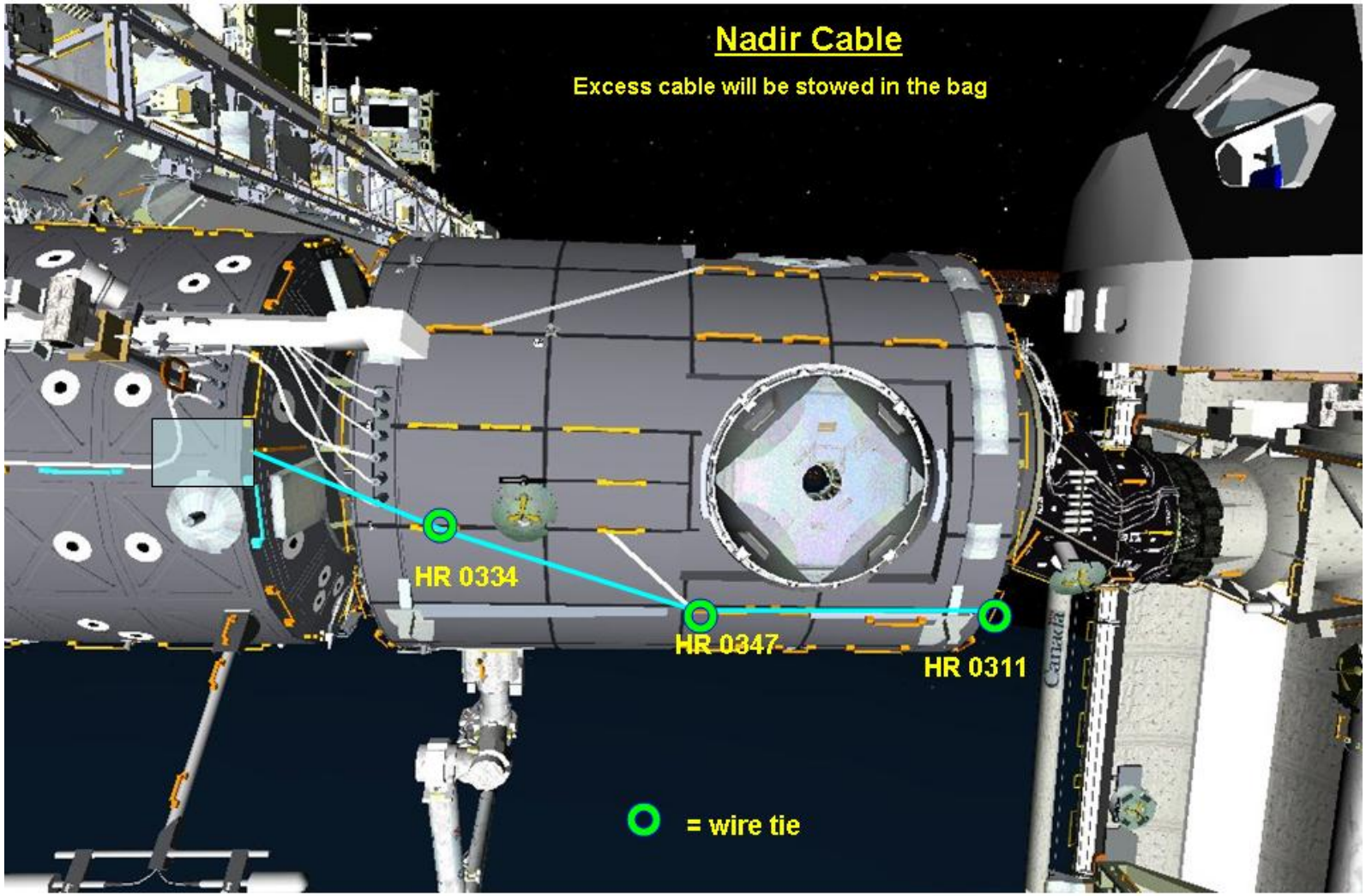

Nadir SSPTS cable (W9303) routing and wire tie locations across Node 2

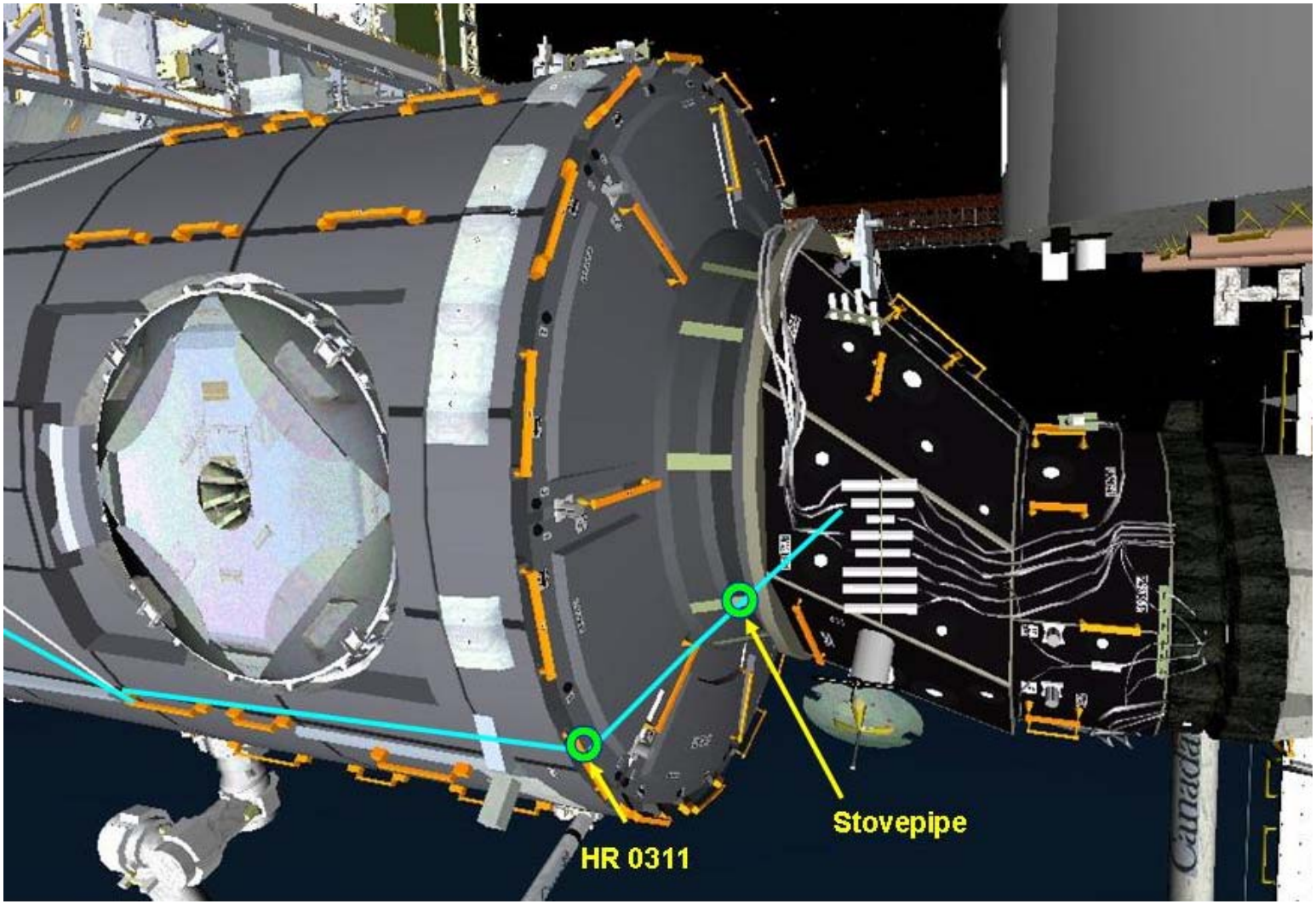

Nadir SSPTS cable (W9303) routing and wire-tie locations onto PMA

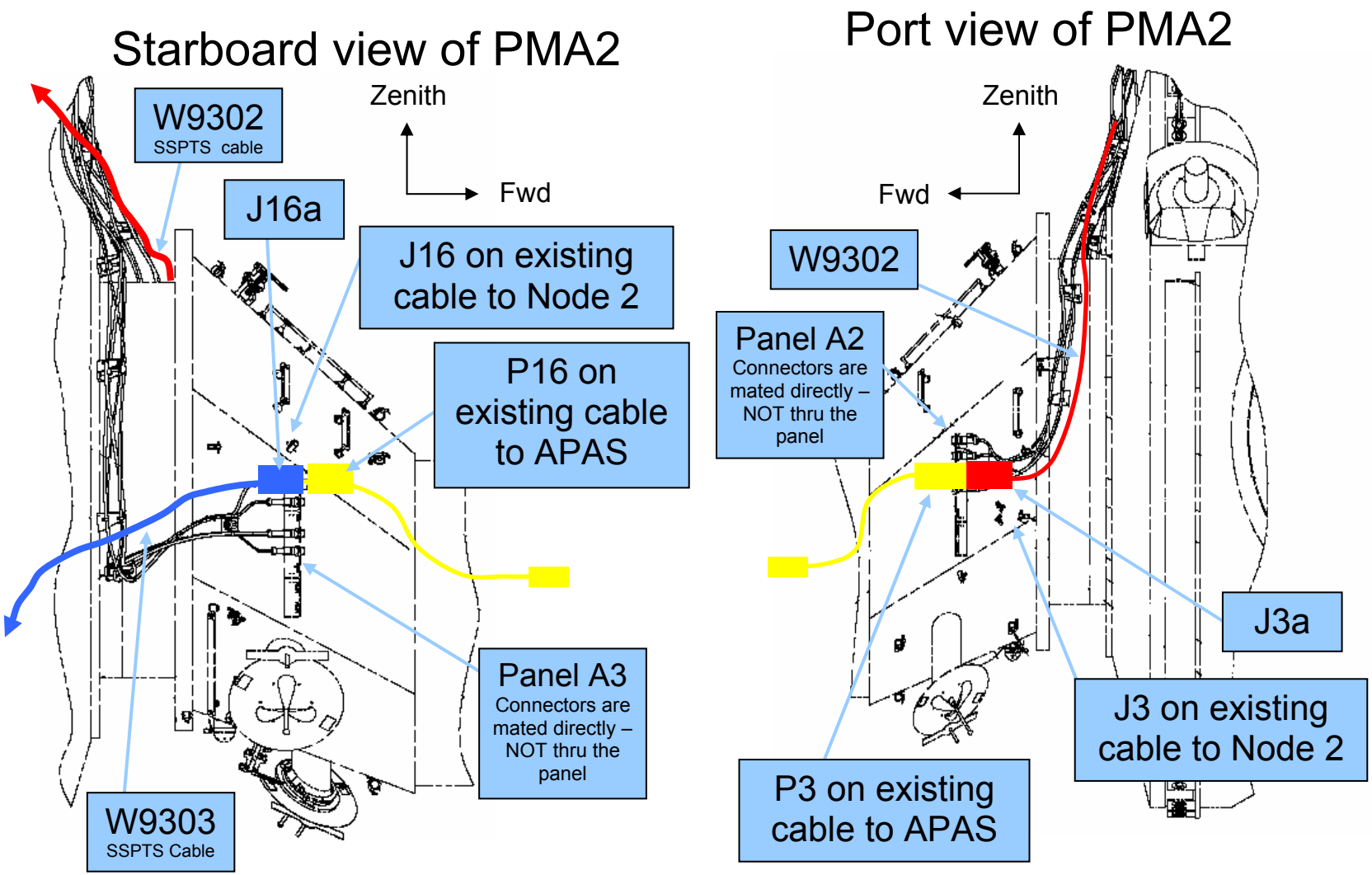

SSPTS Cable Connections

CLEANUP AND A/L INGRESS (00:30)

IV/SSRMS	EV1	EV2
	CLEANUP (00:20)	CLEANUP (00:20)
1. Verify Tool Inventory	1. Translate to NTA bag; stow wire-tie caddy 2. Retrieve NTA bag 3. Perform Tool Inventory 4. Translate to Airlock	1. Perform tool inventory 2. Translate to Airlock
	INGRESS (00:10)	INGRESS (00:10)
2. Prior to ingress, perform: WVS PWRDN (P/TV, WVS CUE CARD)	5. Open thermal cover 6. Attach NTA bag to airlock ret; stow 7. Ingress Airlock 8. Attach left waist tether to fwd UIA tether point 9. Detach safety tether from right D-ring extender and transfer to EV2	3. Receive safety tether from EV1 4. Stow EV1 safety tether on HR 0554 port stanchion; verify tether reel is in “UNLOCK”
	10. Attach EV2’s waist tether to EVA hatch D-ring	5. Transfer left waist tether to EV1 6. Detach safety tether from right D-ring extender 7. Stow safety tether on airlock handrail (fwd posn) or fwd airlock handrail stanchion; verify tether reel is in “UNLOCK” 8. Ingress Airlock 9. Install RET or hook on thermal cover to pull in 10. Close hatch thermal cover; attach Velcro strap
	11. Connect SCU to DCM; √SCU locked 12. WATER – OFF (fwd)	11. Connect SCU to DCM; √SCU locked 12. WATER – OFF (fwd)
	CAUTION Do not close hatch until EMU water – OFF for 2 min	
		13. Verify outer hatch clear of hardware 14. EV Hatch – verify handle position per hatch decal; close and lock
	13. Go to PRE-REPRESS (DEPRESS/REPRESS Cue Card)	15. Go to PRE-REPRESS (DEPRESS/REPRESS Cue Card)

EVA 3 BRIEFING CARD

EV1 _____
EV2 _____
IV _____
R1/M1 _____

EVA Prep start (GMT) ____/____ ____:____ ____
Depress to 10.2 ____ ____:____ ____
Start Purge ____ ____:____ ____
PET 00:00 ____ ____:____ ____

Flight Day Prior to EVA – General Briefing (All)

1. EVA Prep
   - ❑ Get-up Plan – clothing and EMU equipment bag – EV1
   - ❑ Prebreathe protocol review (Notes and Warnings) – IV
   - ❑ Equipment lock activities – IV responsibilities
   - ❑ Suit donning plan – special requests – EV's, IV's
   - ❑ SAFER, MWS, tools, C-Lk positions, bag stowage – EV2
   - ❑ Airlock depress review – IV

2. EV Crew Procedure Review – EV1
   - ❑ Egress Plan
   - ❑ Order of tasks (summary timeline)
   - ❑ Translation plan, fairleads, and tether swaps
   - ❑ Hazards
   - ❑ Ingress Plan

3. Robotics – R1/M1
   - ❑ SRMS/SSRMS initial position, maneuvers, clearances
   - ❑ Coordinate Frames
   - ❑ SRMS/SSRMS comm protocol review – expected calls, use first names
   - ❑ GCA – when, where, handover language
   - ❑ Cameras
   - ❑ Contingencies
     - Suit anomalies while ingressed
     - Suit anomalies while ingressed and holding payload/ORU

Flight Day Prior to EVA – Additional Briefing (EV, IV)

4. Communications – CDR, IV
   - ❑ Overall setup: big loop, A/G2, S/G2, ICOM, Hardline, remind EV crew when mode swapping
   - ❑ EV/IV comm protocol review – Use EV1(2) for DCM sw throws (all time in A/L), use first names otherwise

5. General Procedure Review – EV1
   - ❑ Get-ahead tasks
   - ❑ Constraints – ground and flight – IV
   - ❑ Notes, Cautions, and Warnings review – IV
   - ❑ Contingency procedures – crib sheet

6. Emergencies Review – EV1
   - ❑ Emergency suit doff and powerdown during EVA prep
   - ❑ Loss of comm
   - ❑ EMU malfunctions
   - ❑ Lost tools
   - ❑ Lost crewmember
   - ❑ DCS
   - ❑ Abort and Terminate scenarios, protocols
   - ❑ Hand signal reviews

7. Post EVA – IV's
   - ❑ Suit doffing responsibilities
   - ❑ Post EVA plan

√Expedited Suit Doffing cue card pre-positioned for EVA day

EVA 3 BRIEFING CARD (Cont)

EVA Day, prior to Prebreathe Protocol

1. Reminders
   - ❑ Translate slow (then space is like water). Relax grip
     - o Be extra careful on non-standard routes or orientations
     - o Don't hop
   - ❑ Tether Discipline
     - o Check all gates closed and hooks locked; check reel locked/ unlocked
     - o Local tether when stopped. Check tethers before you leave
     - o When something is attached to a tether, don't grab the tether by the hook
     - o Good pull tests
   - ❑ APFR ops
   - ❑ Be disciplined when tired
   - ❑ Hazards: payloads, etc
   - ❑ Openness: when you have boot or glove pain let us know
   - ❑ OK for IV and ground to check on us. If you need update, ask
   - ❑ Monitor safety tether. Hold peanut when necessary
   - ❑ Let mistakes pass
   - ❑ If you get a mal, read the caution and warning message so everyone knows what it is
   - ❑ Manage frustration (slow down, if needed)
   - ❑ Cold soak before ingress
   - ❑ Verify PGT settings. PGT collars are easy to bump
   - ❑ Read turns, torque, green light
   - ❑ SSRMS: coordinate frames and positive GCA handovers
   - ❑ Review first post-egress steps
   - ❑ Review abort/terminate priorities and procedures
   - ❑ Glove Checks
   - ❑ Day/night reconfigurations
   - ❑ Translation Adaptation plan

IV Checklist Verification Items

1. Generic
   - ❑ Day/Night Cycles
     - • √Lights, gloves and heaters, tethers, and MWS
   - ❑ √Load Alleviating Strap on Safety Tethers not damaged
     - • Crew report: "**Safety Tether strap looks good**"
   - ❑ √Safety Tether Crew Hooks Slidelock are locked
     - • Crew Report: "**Locked and locked**"
   - ❑ √Both SAFER valves down at egress
     - • Crew Report: "**Both handles down**"
   - ❑ √APFR locking collar Black-on-black and pull test
     - • Crew Report: "**Black-on-black, good pull test**"
   - ❑ √PGT Green light on for bolt engage
     - • May get Lo Torque msg at bolt release
     - • Crew Report: "**XX turns, XX torque (green light)**"
   - ❑ √Latches closed on lid, door, etc (i.e., √in landing config)
     - • Crew Report: "**XX Latches done**"
   - ❑ √Connectors for no bent pins, no FOD, inhibits in place
     - • Crew Report: "**Pins good, no FOD, bend radius OK**"
     - • Crew Report: "**Are inhibits in place?**"

2. Task Specific
   - ❑ √Tethers and Tools clear prior to SSRMS ORU movement
     - • Each EV report: "**Tethers and tools clear**"

3. Tool inventory
   - ❑ √Tethers on MWS
   - ❑ Confirm all others as standard unless removed

EVA 3 TOOL CONFIG

Pre-EVA Tool Configuration

AIRLOCK

- ☐ Staging Bag
  - ☐ Fish stringer (2)
    - ☐ Connector Cleaner Tool Kit
    - ☐ Wire Tie Caddy
    - ☐ Spare PGT (s/n_____)
      - ☐ PGT Battery (s/n_____)
    - ☐ Connector Pin Straightener
    - ☐ MWS Key Strap (wiretie to fish str)
    - ☐ Velcro/Tape Caddy
    - ☐ Spare safety tether (55-ft)
    - ☐ Pry Bar
    - ☐ Probe
- ☐ IV Bag
  - ☐ Contamination Detection Kit
    - ☐ Gold Salt Coupon (6)
    - ☐ Color Chart (2)
    - ☐ ISS Contamination Sampler (2)
    - ☐ Shuttle Contamination Sampler (2)
    - ☐ Ammonia Draeger Tube (12)
  - ☐ Mesh Bag
    - ☐ Towels (2)
  - ☐ DCM Plug (2) (SAFER hard mount)
  - ☐ GP Caddy (2)
    - ☐ Thermal Mittens (2 pr)
  - ☐ Socket Caddy
    - ☐ 1/2 x 8-in socket (IV Hatch)
    - ☐ 7/16 x 6-in socket (backup)
- ☐ D-ring extender on EVA hatch D-ring

- -

- ☐ Crewlock Bag – COL
  - ☐ Ret equip tether (1 Lg-eq) – Airlock
  - ☐ Adj equip tether (1) – ext (cinch tight)
  - ☐ Handrail (1; short)
    - ☐ Ret equip tether
  - ☐ Handrails (2; short)
  - ☐ WIFs (2)
  - ☐ Keel pin cover
    - ☐ Ret equip tether
  - ☐ Digital Camera and bracket (morning of EVA)
- ☐ OIH Bag – COL Handrails
  - ☐ Ret equip tether (1 Lg-eq) – Airlock
  - ☐ Handrails (2 short, 4 long)

(Cont)

EV1

- ☐ MWS
  - ☐ Right swing arm
    - ☐ PGT (s/n _____, batt s/n_____)
      - ☐ 6-Ext 7/16 socket √PGT settings
      - ☐ Ret equip tether (eq-eq; ret box @ PGT)
  - ☐ T-Bar
    - ☐ Wire ties (3)
    - ☐ Small EVA trash bag
    - ☐ Ret equip tether (eq-eq)
    - ☐ Ret equip tether (eq-eq) w/PIP
    - ☐ Adj equip tether
  - ☐ BRT
    - ☐ Wire ties (2)
    - ☐ Ret equip tether (eq-eq)
    - ☐ Adj equip tether
  - ☐ D-ring extender (2)
    - ☐ Waist tether (to left D-ring extender)
    - ☐ Spare 85-ft safety tether (to L D-ring ext)
- ☐ SAFER

EV3

- ☐ MWS
  - ☐ Right swing arm
    - ☐ PGT (s/n _____, batt s/n _____)
    - ☐ 6-Ext 7/16 socket √PGT settings
    - ☐ Ret equip tether (eq-eq; ret box @ PGT)
  - ☐ T-Bar
    - ☐ Wire ties (3)
    - ☐ Small EVA trash bag
    - ☐ Ret equip tether (eq-eq)
    - ☐ Ret equip tether (eq-eq) w/PIP
    - ☐ Adj equip tether (2)
  - ☐ BRT
    - ☐ Wire ties (2)
    - ☐ Ret equip tether (eq-eq)
  - ☐ D-ring extender (2)
    - ☐ Waist tether (to left D-ring extender)
    - ☐ Spare 85-ft safety tether (to L D-ring ext)
- ☐ SAFER

Post-EVA Tool Configuration

AIRLOCK

- ☐ Staging Bag
  - ☐ Fish stringer
    - ☐ Connector Cleaner Tool Kit
    - ☐ Wire Tie Caddy
    - ☐ Spare PGT
  - ☐ PGT Battery
    - ☐ Connector Pin Straightener
    - ☐ MWS Key Strap
    - ☐ Velcro/Tape Caddy
    - ☐ Spare Safety Tether
    - ☐ Pry Bar
    - ☐ Probe
- ☐ IV Bag
  - ☐ Contamination Detection Kit
    - ☐ Gold Salt Coupon (6)
    - ☐ Color Chart (2)
    - ☐ ISS Contamination Sampler (2)
    - ☐ Shuttle Contamination Sampler (2)
    - ☐ Ammonia Draeger Tube (12)
  - ☐ Mesh Bag
    - ☐ Towels (2)
  - ☐ DCM Plug (2) (SAFER hard mount)
  - ☐ GP Caddy (2)
    - ☐ Thermal Mittens (2 pr)
  - ☐ Socket Caddy
    - ☐ 1/2 x 8-in socket (IV Hatch)
    - ☐ 7/16 x 6-in socket (backup)
- ☐ D-ring extender on EVA hatch D-ring

- -

- ☐ Crewlock Bag – COL
  - ☐ Ret equip tether (1 Lg-eq) – Airlock
  - ☐ Adj equip tether (1) – ext
  - ☐ Ret equip tethers (2) – interior
  - ☐ Handrails (0-3 short)
  - ☐ WIFs (0-2)
  - ☐ Digital Camera and bracket
- ☐ OIH Bag – COL Handrails
  - ☐ Ret equip tether (1 Lg-eq) – Airlock
  - ☐ Handrails (0-2 short, 0-4 long)
- ☐ Ret Equip tether (Lg-eq from CMG)

(Cont)

EV1

- ☐ MWS
  - ☐ Right swing arm
    - ☐ PGT
  - ☐ 6-Ext 7/16 socket
    - ☐ Ret equip tether
  - ☐ T-Bar
    - ☐ Wire ties (3)
    - ☐ Small EVA trash bag
    - ☐ Ret equip tether (eq-eq)
    - ☐ Ret equip tether (eq-eq) w/PIP
    - ☐ Adj equip tether
  - ☐ BRT
    - ☐ Wire ties (2)
    - ☐ Ret equip tether (eq-eq)
    - ☐ Adj equip tether
  - ☐ D-ring extender (2)
    - ☐ Waist tether
    - ☐ 85-ft safety tethers (2)
- ☐ SAFER

EV3

- ☐ MWS
  - ☐ Right swing arm
    - ☐ PGT
      - ☐ 6-Ext 7/16 socket
      - ☐ Ret equip tether (eq-eq)
  - ☐ T-Bar
    - ☐ Wire ties (3)
    - ☐ Small EVA trash bag
    - ☐ WIF adapter
    - ☐ Ret equip tether (eq-eq)
    - ☐ Ret equip tether (eq-eq) w/PIP
    - ☐ Adj equip tether (2)
  - ☐ BRT
    - ☐ Wire ties (2)
    - ☐ Ret equip tether (eq-eq)
  - ☐ D-ring extender (2)
    - ☐ Waist tether
    - ☐ 85-ft safety tethers (2)
- ☐ SAFER

EVA 3 TOOL CONFIG (Cont)

AIRLOCK

- ☐ Contingency Tools crewlock bag – endcone
- ☐ Waist tether
- ☐ Socket Caddy
- ☐ RAD s/n _____
- ☐ 2-ext 7/16th socket
- ☐ EVA Ratchet
- ☐ Vise Grips
- ☐ T-Handle tool (short)
- ☐ T-Handle tool (long)
- ☐ Long Duration tie down tethers (2)

Prior to EVA:

- Inspect small trash bag bristles for damage or deformation
- Inspect RET cords for damage
- Inspect safety tethers and waist tethers load alleviating straps

- ☐ Contingency Tools crewlock bag – endcone
- ☐ Waist tether
- ☐ Socket Caddy
- ☐ RAD s/n _____
- ☐ 2-ext 7/16th socket
- ☐ EVA Ratchet
- ☐ Vise Grips
- ☐ T-Handle tool (short)
- ☐ T-Handle tool (long)
- ☐ Long Duration tie down tethers (2)

ISS Configuration Notes:

- MT at WS 7 with both CETA carts STBD
- SSRMS at Node 2 PDGF
- Columbus on Node 2 STBD CBM
- CMG on ESP-2 site 5 (nadir, stbd, aft)

Ret/Adj Type	Usage	Availability
Ret eq-eq (-381)	8	18 (16+2)
Ret eq-eq w/PIP (-383)	2	4
Ret Lg-eq (-385)	2	8
Adjustable	5	15 (9+6)

Handrail Bag

- HR 933
- HR 934
- HR 932
- HR 935
- HR 936
- HR 937

Crewlock Bag

- HR 929 (on integral RET)
- HR 930
- HR 931 (on integral RET)

EVA 3 INHIBIT PAD

Orbiter (1)

ALL EVAs

TCS

L12 1. √TCS POWER – OFF

KU-BAND ANTENNA

MCC-H 1. √KU-BAND Mask – active
2. √KU-BAND EVA Protect Box – active

RCS

If EV crew < 27 ft from FRCS
IV 1. √DAP: VERN, FREE, LO Z (flt specific check with GNC)
O14,15,16 2. √RJDF F1, F2, F3, F4 MANF DRIVER (four) – OFF
LOGIC (four) – OFF
MCC-H 3. √Above RCS config
IV 4. √RCS F – ITEM 1 EXEC (*)
√JET DES F1U – ITEM 17 (*)
F3U – ITEM 19 (*)
F2U – ITEM 21 (*)

S-BAND ANTENNAS

NOTE
Possible loss of comm when forced LL FWD antenna

IV If EV crew < 1.6 ft from S-Band antenna
A1R 1. S-BAND FM ANT – XMIT LOWER/RCVR UPPER
2. √MCC, lower antenna selected
If no comm, or on MCC GO
C3 3. S-BAND PM ANT – LL FWD
When EVA crewmember at least 1.6 ft away from all S-Band upper antennas
C3 4. S-BAND PM ANT – GPC

Ground

ALL EVAs

GROUND RADAR

MCC-H 1. √TOPO console, ground radar restrictions in place for EVA

USOS (1)

ALL EVAs

PCU

NOTE
PCUs may require up to 1 hr warm-up period before they are operational

MCC-H 1. √PCUs (two) operational in discharge mode and one of the following:
a. CCS PCU EVA hazard control enabled
b. No more than two arrays unshunted
c. No more than two arrays pointed < 105º from velocity vector

OR

2. One or no PCUs operational in discharge mode and one of the following:
a. No more than two arrays unshunted
b. No more than two arrays pointed < 105.º from velocity vector

LOCATION DEPENDENT INHIBITS

LAB WINDOW (Translation to Payload Bay)

IV Verify LAB window shutter – close

KU-BAND (SGANT) ANTENNA

MCC-H If EV crew < 3.3 ft from KU-BAND antenna
1. Park KU-BAND:
1.1 Pointing Mode – Inhibit
1.2 PLC – Reset
1.3 Autotrack Continuous Retry – Inhibit

Cont next page

EVA 3 INHIBIT PAD (Cont)

USOS (2)

LOCATION DEPENDENT INHIBITS

S-BAND (SASA) ANTENNAS
MCC-H If EV crew < 3.6 ft from S1 SASA [P1 SASA]
1. P1 SASA [S1 SASA] – Active
2. S1 SASA [P1 SASA] – Powered down

SARJ
MCC-H If EV crew working within 2 ft or outboard of SARJ:
1. √DLA (1) – LOCKED
2. All motor setpoints set to zero
3. All motors deselected

OR

4. Both DLAs – LOCKED

TRRJ
MCC-H If EV crew working within 2 ft of P1 (S1) TRRJ rotation envelope:
1. √DLA (1) – LOCKED
2 √Other DLA (1) – ENGAGED

UNGROUNDED CONNECTORS (Translation to Payload Bay)
MCC-H Verify SSPTS deactivated:
1. √RPCM LA2A3B_D RPC 1 – Open, Close Cmd Inhibit
LA1A4A_D RPC 3 – Open, Close Cmd Inhibit
Z13B_A RPC 2 – Open, Close Cmd Inhibit
Z14B_A RPC 2 – Open, Close Cmd Inhibit

RSOS (1)

ALL EVAs

SM Antennas
IV
1. GTS – Deactivate
2. ARISS (Ham Radio) – Deactivate or VHF (144-146 MHz) TX only

TASK SPECIFIC INHIBITS

CMG Transfer
MCC-H
1. RPCM N1RS2_B RPC 7 – OPEN, CL cmd INH
2. RPCM S04B_F RPC 11 – OPEN, CL cmd INH

EVA 3 NOTES, CAUTIONS, AND WARNINGS

NOTES

1. Bolt install: report torque and turns
2. Bolt release: report torque and turns if different from published range
3. EVA connectors: after disconnection and prior to connection; verify pin and EMI band integrity; verify connector free of FOD
4. Inspect QDs for damage prior to mating
5. Toolbox doors must be closed with one latch per door when EV crew not in immediate vicinity
6. Avoid contact with OBSS striker bars (Vitrolube coating)

CAUTION

ISS Constraints

A. Avoid inadvertent contact with
   1. Grapple fixture shafts (drylube)
   2. PIP pins
   3. EVA Crane [PMA1]
   4. TCS Reflectors [PMA2, PMA3]
   5. APAS hardware [PMA2, PMA3]
   6. CETA Lights (Z-93 paint) [LAB, S1, Node 1]
   7. Deployed MISSEs (currently none)
   8. Passive UMAs
   9. MBS VDU, MCU, CRPCMs, and Cameras (taped radiative surfaces, silver Teflon)
   10. Deployed TUS cable
   11. S0 aft face Radiator
   12. GPS Antennas (S13 paint) [S0]
   13. UHF Antennas [LAB, P1]
   14. ETCS Radiator flexhoses and panels [S1, P1]
   15. EETCS/PV Radiator flexhoses, bellows and panels [P6, P4, S4, S6]
   16. SASA RF Group [Z1, S1]
   17. Heat pipe radiators [Z1]
   18. PCU cathode and HCA ports [Z1]
   19. Ku-Band Antenna (SGANT) dish [Z1]
   20. CMG cover/shells [Z1]
   21. SSRMS Cameras
   22. Open CBM petal covers and LAB window shutter

CAUTION (Cont)

ISS Constraints (Cont)

B. Electrical cables
   1. Avoid bend radii < 10 times cable diameter

C. Fiber optic cables
   1. Avoid bend radii < 10 times cable diameter
   2. Avoid pulling on cable during mate/demate

D. Fluid line flex hoses and QDs
   1. Avoid bend radii < 5 in for hoses with diameter < 1 in on LAB, S0, S1, P1, and 10 in for hoses with diameter < 1 in on all other elements
   2. Avoid bend radii < 14 in for hoses with a diameter ≥ 1 in
   3. Additional care should be taken to not exceed bend radii when applying loads at the flexible hose to rigid tube stub interfaces
   4. Ensure fluid QD booties are fully closed prior to leaving worksite; wire tie if reqd

E. For structural reasons
   1. Avoid vigorous body motions, quick grabs and kickoffs against tether restraints
   2. Avoid performing shaking motions (sinusoidal functions) more than four cycles
   3. Avoid kicking S1/P1 radiator beam
   4. If any of these occur, wait 2 to 5 min to allow structural response to dissipate

EVA 3 NOTES, CAUTIONS, AND WARNINGS (Cont)

CAUTION (cont)

ISS Constraints (Cont)

F. Other
1. ITT Cannon connector: On demated connectors, do not rotate collar or manipulate cable/connector using collar or connector tool
2. WIS Antennas: do not use as handholds [Node 1, Lab, P6, Z1]
3. Lubricant from Ku-Band SGANT gimbals [Z1], CMGs [Z1], and RTAS Ground Strap fasteners [P6, P4, S4, S6] can contaminate EMU
4. MLI handholds are not rated for crewmember translation loads
5. CBM petal covers may not be used as handholds unless both launch restraint pins are engaged
6. Prevent inadvertent contact of the tether shuttle with ETRS when the P3/S3 Tether Shuttle Stop is raised away from the rail

CAUTION (Cont)

Shuttle Constraints

G. Avoid inadvertent contact with
1. OBSS and SRMS Composite Sections and Cable Harnesses
2. LCS (silver Teflon) and LDRI (silver Teflon) and ITVC (gold foil) [OBSS]
3. WVS Antenna [ODS Truss & PLB Sill]
4. Payload Bay wire harnesses, cables, and connectors

H. No touch
1. LDRI diffuser [OBSS]
2. OBSS saddle contacts (when OBSS unberthed) [OBSS]
3. Monkey fur [PLB]
4. Cameras: metallic surfaces [PLB]
5. Ku-Band Antenna black dish and gold thermal blankets [PLB]

EVA 3 NOTES, CAUTIONS, AND WARNINGS (Cont)

WARNING

ISS Constraints

A. Avoid inadvertent contact with
1. Grapple fixture targets and target pins
2. SSU, ECU, beta gimbal platform, mast canister, SAW blanket boxes unless the beta gimbal is locked and the motor is turned off
3. Stay inboard of SARJ when active
4. Stay 2 ft from S1/P1 radiator beam rotational envelope when beam is free to rotate
5. Stay 5 ft from moving MT on face 1

B. Handrails
1. Handrails previously used for MISSE attachment may not be used as a safety tether point [A/L endcone 564 & 566, A/L Tank 2 nad/fwd & port/fwd, P6 5389]

C. Pinch
1. NZGL connector linkage. Use caution when mating/locking
2. ITT Cannon Connector rotating housing
3. EV side of IV Hatch during Hatch operation (also snag hazard) [A/L]
4. LAB window shutter and CBM petal cover linkages during operation

D. QDs
1. If QD is in FID when valve is opened (bail fwd), QD will leak and fluid line may whip
2. Do not rotate if in mated/valve open config

WARNING (Cont)

ISS Constraints (Cont)

E. RF radiation exposure
1. Stay 3.6 ft from S-Band (SASA) high gain Antenna when powered [S1, P1]
2. Stay 1.3 ft from S-Band (SASA) low gain Antenna when powered [S1, P1]
3. Stay 1 ft from UHF Antenna when powered [LAB, P1]

F. Sharp Edges
1. Inner edges of WIF sockets
2. Mating surfaces of EVA connectors. Avoid side loads during connector mating
3. Back side of MMOD shield fasteners
4. Spring loaded captive EVA fasteners (e.g., 6B-boxes, BMRRM, RTAS); the end of the spring may protrude
5. PMA umbilical launch restraints-exposed bolt threads
6. Adjustable Fuse Tether (Fish Stringer) buckles stowed in Node Bag
7. Nickel coated braided copper Ground Straps may contain frayed wires [P6, P4, S4, S6]
8. Z1 handrail 6061 by the Ku-Band boom launch restraint [Z1]
9. Solar Array Blanket Box [P6, S6]
10. Keep hands away from SSRMS LEE opening, and snares
11. Fastener threads on back of Z1 U-jumper male FQD panel, if nutplate cap missing

WARNING (cont)

ISS Constraints (cont)

G. Thermal
1. EVA connectors with booties may become hot if left uncovered. Handling may need to be limited
2. PMA handrails may be hot. Handling may need to be limited
3. Turn off glove heaters when comfortable temp reached to prevent bladder damage. Do not pull fingers out of gloves when heaters are on
4. Uncovered trunnion pins may be hot
5. SSRMS/MBS operating Cameras and lights may radiate large amounts of heat
6. Stay at least 1 ft away from PMAs and MMOD shields > 270 degF if EMU sun visor up
7. Stay at least 1 ft away for no more than 15 min from PMAs and MMOD shields > 300 degF if EMU sun visor up
8. Stay at least 0.5 ft away from PMA and MMOD shields > 325 degF
9. Do not touch EMU protective visor if temp has been < -134 for >15 min
10. No EMU TMG contact with PMAs and MMOD shields > 320 degF
11. No EMU boot contact with foot restraint when temp < -120 degF or > 200 degF

EVA 3 NOTES, CAUTIONS, AND WARNINGS (Cont)

WARNING (Cont)

Shuttle Constraints

H. Arcing/Molten Debris
1. Stay ≥ 2 ft from exposed EFGF connector when OBSS berthed, powered, and EFGF not grappled [PLB]
2. Stay ≥ 2 ft from exposed Stbd Fwd MPM contacts [PLB]

I. Pinch
1. PRLA operation [PLB]

J. RF radiation exposure
1. Stay 3.28 ft from S-Band Antenna when powered
2. Stay 1 ft from top and side of UHF PLB Antenna radome surface when in high powered mode [ODS truss]
3. Stay 0.33 ft from top and side of UHF PLB Antenna radome surface when in low powered mode [ODS truss]
4. Remain below the level of the PLB door mold line for first 20 in aft of Fwd bulkhead when S-Band Antenna powered [PLB]
5. Remain on the inboard side of the Stbd slidewire (sill handrails if slidewire not installed) for first 20 ft aft of Fwd bulkhead when Ku-Band Antenna powered [PLB]

WARNING (Cont)

Shuttle Constraints (Cont)

K. Sharp Edges
1. PRLA grounding wipers [PLB]
2. LDRI baffles (Also an entrapment hazard) [OBSS]
3. Keep hands away from SRMS EE opening and snares

L. Thermal
1. Illuminated PLB lights; do not touch
2. OBSS grapple fixture shafts/cams may be hot. Limit handling if required
3. Stay 27 ft from PRCS when powered
4. Stay 3 ft from VRCS when powered
5. Stay 3 ft from APU when operating

M. Contamination
1. Stay out of the immediate vicinity of leaking jet or APU

N. Lasers
1. Do not look at LDRI diffuser or LCS laser aperture window

EVA 3 SUMMARY TIMELINE

TASK TIME (PET TIME) HR : MIN	IV/SSRMS	EV1 (FF)	EV3 (SSRMS)
00:00 --	SSRMS: At APFR Ingress Posn	POST DEPRESS (00:05)	POST DEPRESS (00:05)
		A/L EGRESS (00:15)	A/L EGRESS (00:15)
		SOLAR TRANSFER (02:40) ❑ Translate to COL; install WIFs and HRs	SOLAR TRANSFER (02:40) ❑ Translate to PLB; reconfig and ingress APFR
	IV: Power off ICC-lite	❑ Translate to PLB for SOLAR assist	
01:00 --	SSRMS: GCA to SOLAR Retrieve Posn SSRMS: Mnvr to SOLAR Install Posn IV: Power on ICC-lite	❑ Relocate EV3 Node 2 safety tether to Node 2	❑ Release SOLAR FRAM from ICC ❑ Maneuver to COL EPF
		❑ Install HRs ❑ Retrieve camera and keel MLI for EV3 ❑ Assist with SOLAR Install	❑ Install SOLAR FRAM on zenith EPF, zenith site
02:00 --	SSRMS: Mnvr to COL Keel MLI Install Posn IV/MCC-H: Activate SOLAR EPF heater power	❑ Install remaining WIFs/HRs	❑ Mnvr to keel MLI install location (photo ops)
	SSRMS: Mnvr to CMG Retrieve Posn (ESP-2) IV: Verify ESP-2 CMG inhibits	❑ Retrieve HR bag, translate to ESP-2 CMG; stow HR bag	❑ GCA for keel pin MLI install ❑ Maneuver to ESP-2 CMG
03:00 --		CMG TRANSFER (01:15) ❑ Open CMG MLI; secure shim bolts 6a, 6b	CMG TRANSFER (01:15) ❑ Reconfig APFR; secure shim bolts 3a, 3b
		❑ Release CMG FRAM from ESP-2	❑ Hold CMG for FRAM release
	SSRMS: Mnvr to CMG Install Posn (PLB) IV: Power off ICC-lite	❑ Translate to PLB, deploying Airlock tether	❑ Maneuver to PLB
04:00 --		❑ Assist with CMG Install, close MLI	❑ Install CMG FRAM on ICC, close MLI
	SSRMS: Maneuver to EuTEF Retrieve Posn	EuTEF TRANSFER (01:35)	EuTEF TRANSFER (01:35) ❑ Reconfig SSRMS/APFR for EuTEF Retrieve
	SSRMS: Mnvr to EuTEF Install Posn IV/MCC-H: Deact SOLAR EPF heater power for EuTEF Install; verify inhibits	❑ Assist with EuTEF Release ❑ Complete payload bay inventory	❑ Release EuTEF FRAM from ICC ❑ Maneuver to COL EPF
05:00 --		❑ Route EV3 safety tether to COL EPF ❑ Assist with EuTEF Install	❑ Install EuTEF FRAM on zenith EPF, stbd site
		❑ Photo EuTEF	❑ Photo EuTEF
	SSRMS: GCA to APFR Egress Posn	❑ Retrieve crewlock bag	❑ Egress APFR; GCA SSRMS for APFR removal
	IV/MCC-H: Activate SOLAR and EuTEF heater power	CLEANUP and A/L INGRESS (00:35) ❑ Translate to Airlock; ingress	CLEANUP and A/L INGRESS (00:35) ❑ Stow APFR
06:00 --			❑ Translate to Airlock; ingress
	EVA Time 06:30	PRE REPRESS (00:05)	PRE REPRESS (00:05)

EVA 3 EGRESS (00:15)

IV/SSRMS	EV1	EV3
1. SSRMS: At PLB ingress posn NOTE Safety tether ops: On egress, EV1 will stow his airlock tether externally for later extension to Node 2 (post CMG release from ESP-2). EV3 will egress and immediately hook up his airlock safety tether, then will also attach to his Node 2 tether. EV3 airlock tether will be deployed to Node 2 during initial translation to payload bay. Both crewmembers will officially transition back to airlock safety tethers as part of clean up 2. IV: WVS Software: Select page – RF camera Select "Advanced Controls" S-Band Level (two) – Max	Initial Config: Left waist tether on Airlock D-ring extender. Spare 85-ft safety tether on left D-ring ext EGRESS (00:15) 1. Thermal cover – open 2. Egress Airlock 3. Stow EV1 spare safety tether on external airlock D-ring 4. Retrieve fwd Node 2 safety tether; inspect load alleviating strap for damage 5. Attach Node 2 safety tether to right D-ring ext 6. Engage safety tether load strap hook – L • √Safety tether reel unlocked 7. Receive left waist tether; stow 8. Receive handrail bag from EV3; stow on BRT 9. Receive crewlock bag from EV3; temp stow 10. Receive EV3 safety tether anchor hook; attach to airlock exterior 11. Engage EV3 safety tether slide lock – L 12. Check EV3 tether and SAFER config • √SAFER MAN ISOL vlv – Open (dn) • √SAFER HCM – Closed (dn)	Initial Config: Left waist tether on fwd UIA tether point. Spare 85-ft safety tether on left D-ring ext EGRESS (00:15) 1. Release EV1 waist tether; transfer to EV1 2. Transfer handrail bag to EV1 3. Transfer crewlock bag to EV1 4. Extend airlock RET sm hooks (2) to airlock D-ring extender 5. Hand safety tether anchor hook to EV1 • √Safety tether reel unlocked • √Load strap hook locked 6. Retrieve waist tether; stow 7. Egress Airlock 8. Check EV1 tether and SAFER config • √SAFER MAN ISOL vlv – Open (dn) • √SAFER HCM – Closed (dn) 9. Close thermal cover 10. Retrieve crewlock bag; stow on BRT 11. Retrieve Node 2 safety tether; inspect load alleviating strap for damage 12. Attach Node 2 safety tether to left D-ring ext 13. Engage safety tether load strap hook slide – L • √Safety tether reel unlocked 14. Perform translation adaptation

SOLAR TRANSFER (02:40)

IV/SSRMS	EV1	EV3
	SETUP (00:40)	SETUP (00:40)
1. SSRMS: at PLB APFR install location NOTE: Use Boom Camera View for reference		
	WARNING Avoid contact with grapple fixture shaft and target pin	
	1. Translate to Columbus • Verify Node 2 safety tether anchor hook – L	1. Translate to Node 2 (lab and node 2 nadir port route) 2. Verify Node 2 safety tether anchor hook – L; temp stow airlock safety tether at Node 2 HR 0304
2. IV: Record Handrail Install turns and torque on COLUMBUS OUTFITTING page	2. Temp stow handrail bag between COL HRs 905 and 906 3. Install Handrails per COLUMBUS OUTFITTING Block A, WIFs per Block B. Expect: ❑ HR 933 *Take HR934 at same time; stow second HR in BRT ❑ HR 934 ❑ HR 932 ❑ WIF 1 ---------- Time permitting ❑ WIF 3 ❑ HR 929 ❑ HR 930 ❑ HR 931	3. Stow crewlock bag on COL HR 905 stbd stanchion 4. Translate to PLB • Fairlead PLB fwd port • Poorman fairlead around fwd MPM
	CAUTION Avoid contact with PL hardware above FRAM	
		5. Translate to APFR setup position (ICC Port) 6. GCA SSRMS for APFR reconfig 7. Configure APFR [**12,PP**,F,6] (clock and pitch change only from 6, TT) 8. Inspect SSRMS safety tether load – alleviating strap 9. Perform safety tether swap onto SSRMS • Verify load strap hook slide lock – L • √Safety tether reel unlocked • √Anchor hook locked 10. Temp stow Node 2 safety tether on port sill 11. Attach waist tether to APFR roll pedal 12. GCA SSRMS for ingress 13. Ingress APFR 14. Inspect gloves; status MCC on RTV and Vectran state 15. Clean up MWS; secure tethers and hardware
	4. Inspect gloves; status MCC on RTV and Vectran state 5. Translate to PLB • Fairlead PLB fwd, stbd	

SOLAR TRANSFER (02:40) (Cont)

IV/SSRMS	EV1	EV3
3. IV: Power off ICC-lite: R1 PL AFT MNB – OFF Give EV3 GO for FRAM bolt release	SOLAR RELEASE FROM ICC (00:50)	16. GCA SSRMS to SOLAR FRAM 17. Verify cooling in good config for mnvr SOLAR RELEASE FROM ICC (00:50)
	NOTE FRAM has a 5.5 lb magnetic soft dock at fwd 2 corners and a 3.5 lb soft dock at aft 2 corners	
	6. Position self to restrain SOLAR; give EV3 GO for FRAM bolt release	18. RET to SOLAR (port side) 19. On IV, EV1 GO: **PGT [A7 (9.2 ft-lb), CCW 2, 30.5], 6-ext 7/16;** verify 0 turn count Release primary FRAM bolt ~11 turns to hard stop (push ~10 lb to release locking tabs) 20. Reset **PGT [CW2]** 21. Lift SOLAR from PFRAM
4. SSRMS: Mnvr to COL zenith, zenith EPF	7. Visually verify SOLAR is clear	22. On EV1 GO, give SSRMS GO for mnvr to COL (~40 min)
5. IV: Power on ICC-lite: R1 PL AFT MNB – ON	8. Retrieve EV3 safety tether from PLB port sill; reposition to Node 2 HR 0317 (retrieve PLB port fairlead) 9. Translate to retrieve own PLB fairlead; translate to Columbus	
6. IV: Record Handrail Install turns and torque on COLUMBUS OUTFITTING page	10. Install Handrails per COLUMBUS OUTFITTING Block A, WIFs per Block B. Expect: ❑ HR 931 (as time permits HR 937) 11. Translate to crewlock bag (COL HR 905) 12. Retrieve camera and keel pin cover	23. Reorient SOLAR for install
7. IV: Verify with MCC-H, EPF FRAM inhibits in place for SOLAR Install PDU1 Outlet 3 SSPC 1-4 (4) – OFF PDU2 Outlet 3 SSPC 1-4 (4) – OFF PPSB PLOZ1 sw – DISCHARGE PPSB PLOZ2 sw – DISCHARGE	13. Translate to zenith EPF, fwd side SOLAR INSTALL (00:10) 14. Restrain SOLAR on EPF	SOLAR INSTALL (00:10) 24. GCA SSRMS to SOLAR install 25. Position SOLAR over PFRAM using FRAM alignment stripes; soft dock SOLAR

SOLAR TRANSFER (02:40) (Cont)

IV/SSRMS	EV1	EV3
8. IV: Record SOLAR FRAM Install turns and torque Green LED Turns/Torque ❑ ____/_____ 9. IV: Give MCC-H/ISS GO for Solar Survival Heater Activation 10. IV: Record WVS closeout video 11. SSRMS: On EV GO, mnvr to keel pin 12. IV: Record Handrail Install turns and torque on COLUMBUS OUTFITTING page 13. IV: Record WVS closeout video 14. SSRMS: Mnvr to ESP-2	15. Inspect gloves; status MCC on RTV and Vectran state 16. Transfer keel pin cover, adj, and camera to EV3 <u>REMAINING WIF/HR INSTALL</u> (01:00) 17. Install Handrails per COLUMBUS OUTFITTING Block A, WIFs per Block B. Expect, if not already performed: ❑ WIF 3 ❑ HR 929 ❑ HR 930 ❑ HR 931 Otherwise: ❑ HR 937 ❑ HR 936 *Take HR 935 at same time; stow second HR in BRT ❑ HR 935 ❑ HR 932 18. Retrieve handrail bag (if empty) 19. Translate to ESP-2 (across top, outboard of pump module); temp stow handrail bag at Airlock 20. Close thermal cover	26. On EV1 and IV GO: Verify **PGT [A7 (9.2 ft-lb), CW2, 30.5], 6-ext 7/16;** verify 0 turn count Engage primary FRAM bolt ~11 turns to hard stop (push ~10 lb to release locking tabs) 27. Perform pull test on FRAM 28. Retrieve RET from SOLAR 29. Provide WVS survey of SOLAR 30. Inspect gloves; status MCC on RTV and Vectran state 31. Receive keel pin cover, adj, and camera from EV1 <u>KEEL PIN MLI INSTALL</u> (01:00) 32. Give SSRMS GO for mnvr to keel pin (~25 min) 33. Take still photography of SOLAR (as able) 34. GCA SSRMS for keel pin access 35. Install cover over keel pin (thermal cover label to port); verify good mate of hi-mag Velcro 36. WVS survey of keel 37. Give SSRMS GO for mnvr to ESP-2 (~25 min)

SOLAR TRANSFER – TASK DATA SHEET

Estimated Task Duration:

	With SSRMS	Without SSRMS
Two EV Crew	02:40	N/A

Tools:

EV1	EV2
• RET • BRT • PGT 6-Ext 7/16 • Camera • OIH Bag • Crewlock Bag	• RET • BRT • PGT 6-Ext 7/16

EVA Fasteners:

Fastener Name	Head Size	Qty	Install Torque (ft-lb)	Release Torque (ft-lb)	Failure Torque (ft-lb)	Turns
Pri FRAM bolt release (SOLAR)	7/16	1	---	9.2	21	11
Pri FRAM bolt engage (SOLAR)	7/16	1	9.2	---	21	11
OIH EVA bolts	7/16	2 per OIH	1.55-5.5	5.5	21.3	8-9.5

Foot Restraints:

Task	WIF	Setting
SOLAR Transfer	SSRMS	12, PP, F, 6

Inhibits:

Task	Inhibit
SOLAR remove from ICC	ICC-Lite Heater Power: R1 PL AFT MN B – OFF
SOLAR install on EPF	PDU1 Outlet 3 SSPC 1-4 (4) – OFF PDU2 Outlet 3 SSPC 1-4 (4) – OFF PPSB PLOZ1 sw – DISCHARGE PPSB PLOZ2 sw – DISCHARGE

Notes:

1. FRAM has a 5.5 lb magnetic soft dock at fwd 2 corners and a 3.5 lb soft dock at aft 2 corners

Cautions:

1. Avoid contact with PL hardware above the FRAM

Warnings:

1. None

SOLAR TRANSFER – TASK DATA SHEET (Cont)

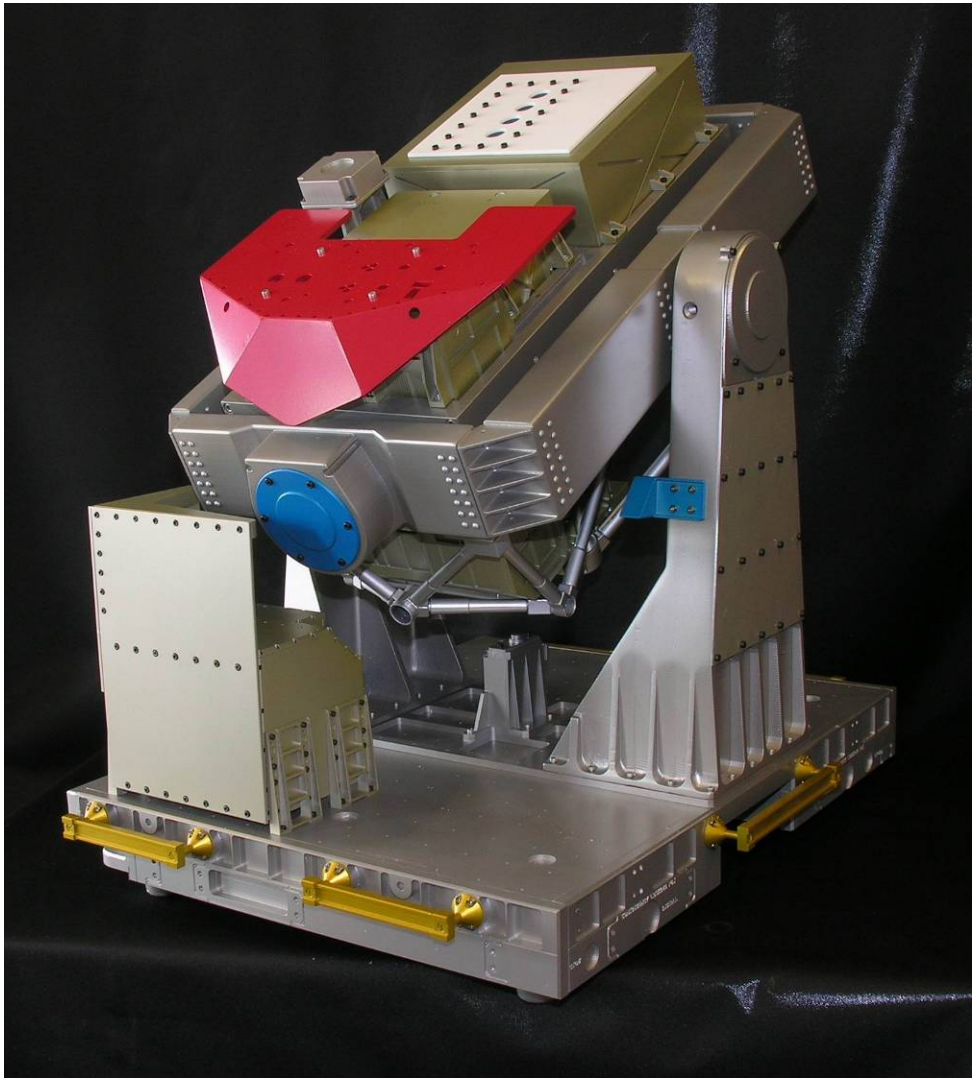

SOLAR Model

SOLAR TRANSFER – TASK DATA SHEET (Cont)

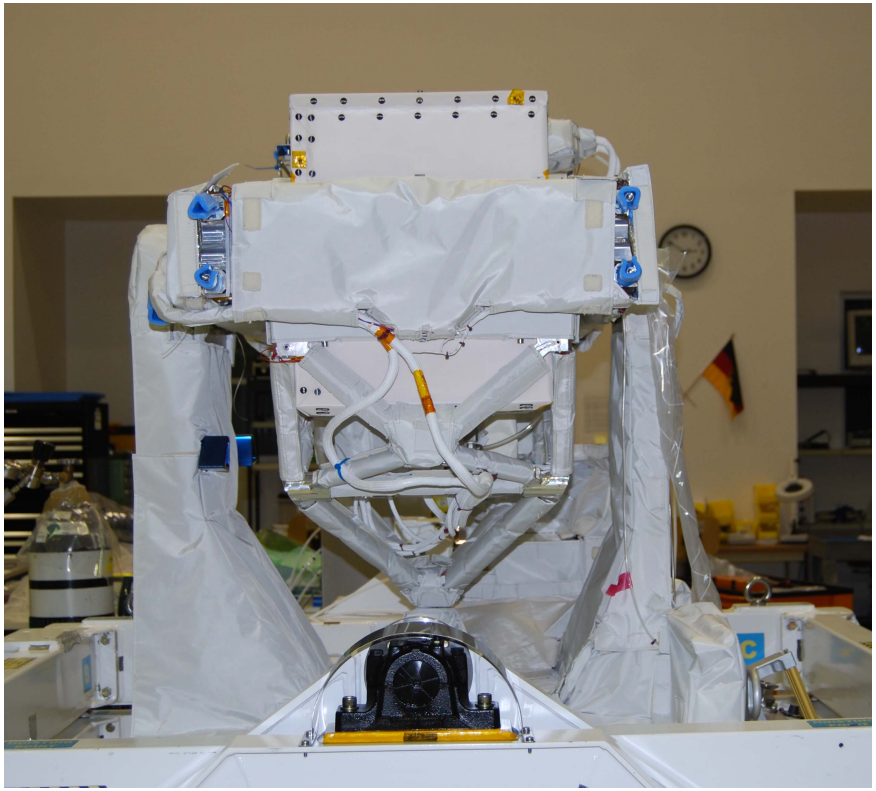

“Remove before flight” covers on SOLAR sensors

CMG TRANSFER (01:15)

IV/SSRMS

1. SSRMS: At ESP-2 CMG shim install location
2. IV: Verify with MCC-H, ESP-2 CMG removal inhibits in place:

   RPCM N1RS2_B RPC 7 – OPEN, CL cmd INH
   RPCM S04B_F RPC 11 – OPEN, CL cmd INH

3. IV: Record CMG shim **turns**, **final torque, and contact**

Adj Shim Bolt	Initial Turns	Final Torque	Shim Contact
3A			
3B			
6A			
6B			

EV1

CMG PREP FOR RELEASE (00:20)

1. Remove CMG MLI as necessary to access shim bolts
2. Retrieve Lg-sm RET from CMG (expected near adj shims 3a/3b); stow at Airlock
3. When EV3 near, position self on ESP-2 stbd aft for APFR reposition
4. Verify EV3's SAFER handles down
5. Assist EV3
6. Install Poorman fairlead on port HR on ESP-2

CAUTION
Verify ccw on PGT prior to initial adjustable shim operations

NOTE
Shim bolt 3a exhibited high running torque (~7ft-lb) on 13A.1

7. **PGT [A3 (4.8 ft-lb), CCW1, MTL 30.5], 6-ext 7/16:** Drive adjustable shim bolts (2), to torque stall, no pattern. Verify shim contact
   - ❑ 6a
   - ❑ 6b
8. Inspect gloves; status MCC on RTV and Vectran state

EV3

CMG PREP FOR RELEASE (00:20)

1. GCA SSRMS for APFR reposition
2. Reconfig APFR [12,PP,**A**,6] (roll change only)
3. Verify EV1's SAFER handles down
4. GCA SSRMS to CMG shim install position
5. Remove CMG MLI as necessary to access shim bolts
6. **PGT [A3 (4.8 ft-lb), CCW1, MTL 30.5], 6-ext 7/16**: Drive adjustable shim bolts (2), to torque stall, no pattern. Verify shim contact
   - ❑ 3a
   - ❑ 3b
7. Stow PGT
8. Inspect gloves; status MCC on RTV and Vectran state

CMG TRANSFER (01:15) (Cont)

IV/SSRMS	EV1	EV3
	CMG RELEASE FROM ESP-2 (00:35)	CMG RELEASE FROM ESP-2 (00:35) 9. GCA SSRMS to CMG/FRAM removal position 10. Verify cooling in good config for mnvr 11. Attach RET to CMG/FRAM on standoff by J3 12. Give EV1 GO for FRAM release
	NOTE FRAM has a 5.5 lb magnetic soft dock at fwd 2 corners and a 3.5 lb soft dock at aft 2 corners	
	9. On IV and EV3 GO: **PGT [A4 (6.3 ft-lb), CCW2, MTL 30.5], 6-ext 7/16:** Verify 0 turn count Release primary FRAM bolt ~11 turns to hard stop (push ~10 lb to release locking tabs)	13. Remove CMG from passive FRAM 14. On EV1 GO, give SSRMS GO to mnvr to PLB (~25 min)
4. SSRMS: Mnvr to PLB on EV3 GO	10. Verify CMG clear of ESP-2; give EV3 GO for mnvr 11. Translate to Airlock 12. Attach Airlock safety tether to left D-ring ext • Verify load strap hook slide lock – L • √Safety tether reel unlocked • √Anchor hook locked 13. Translate to Node 2 HR 0332 14. Temp stow Airlock safety tether on Node 2 HR 0333	
5. IV: Power off ICC-lite: R1 PL AFT MNB – OFF Give EV2 GO for CMG FRAM bolt	15. Translate to PLB • Fairlead in PLB fwd stbd	15. Reorient CMG for install (rotate cw 120°; looking at #1 and #6 bolts)
	CMG INSTALL ON ICC (00:20)	CMG INSTALL ON ICC (00:20)
	16. GCA SSRMS for CMG install (ICC port) 17. Assist EV3 to soft dock CMG/FSE 18. On IV GO: **PGT [A4 (6.3 ft-lb), CW2, MTL 30.5], 6-ext 7/16**: Verify 0 turn count	16. Position CMG over PFRAM using FRAM alignment stripes; soft dock CMG

CMG TRANSFER (01:15) (Cont)

IV/SSRMS	EV1	EV3
6. IV: Record CMG FRAM Install turns and torque Green LED Turns/Torque ❑ ____/_____	Engage primary FRAM bolt ~11 turns to hard stop (push ~10 lb to release locking tabs) 19. Perform pull test on AFRAM 20. Release EV3's tether; transfer to EV3	
7. IV: Record WVS imagery	21. Reinstall MLI 22. Inspect gloves; status MCC on RTV and Vectran state	17. Assist w/MLI installation as SSRMS maneuvers for APFR Reconfig 18. Inspect gloves; status MCC on RTV and Vectran state 19. WVS survey of CMG

CMG TRANSFER – TASK DATA SHEET

Tools:

EV1 (SSRMS)	EV3 (FF)
PGT	PGT
7/16 (wobble) socket-6 ext	7/16 (wobble) socket-6 ext

EVA Fasteners:

Fastener Name	Label	Head Size	Qty	Install Torque (ft-lb)	Release Torque (ft-lb)	Failure Torque (ft-lb)	Turns
CMG Shims (adjustable)		7/16	4	4.8 (**ccw**)	N/A (**cw**)	6.8	2-5
FRAM Primary Drive Bolt (CMG)	FRAM Activation Drive Lock	7/16"	1	6.3	6.3	21	11

EVA Connectors:

Harness	From	To	Conn Size	Function
None				

Foot Restraints:

Task	WIF	APFR Setting
CMG retrieve and install	SSRMS	12, PP, A, 6

Inhibits:

Task	Inhibit
CMG remove from ESP-2	RPCM N1RS2_B RPC 7 – OPEN, CL cmd INH RPCM S04B_F RPC 11 – OPEN, CL cmd INH
CMG install on ICC-Lite	R1 PL AFT MNB – OFF

Notes:

1. FRAM has a 5.5 lb magnetic soft dock at fwd 2 corners and a 3.5 lb soft dock at aft 2 corners
2. STS-118 experienced difficulty with the 3A shim bolt (higher torque reqd)

Cautions:

1. Avoid contact with PL hardware above the FRAM
2. Avoid inadvertent contact with CMG
3. CMG may have oily residue around the Torque Module Assembly, avoid contact (may cause damage to other ORUs through cross-contamination)
4. Adjustable shims can not be turned cw from launch position or damage to soft dock spring plungers can occur. The adjustable shims are used for landing while the fixed shims (removed previously) are used for launch. The adjustable shims will not be completely installed when the CMG is installed on ESP-2

Warnings:

1. None

CMG TRANSFER – TASK DATA SHEET (Cont)

Clamshell MLI

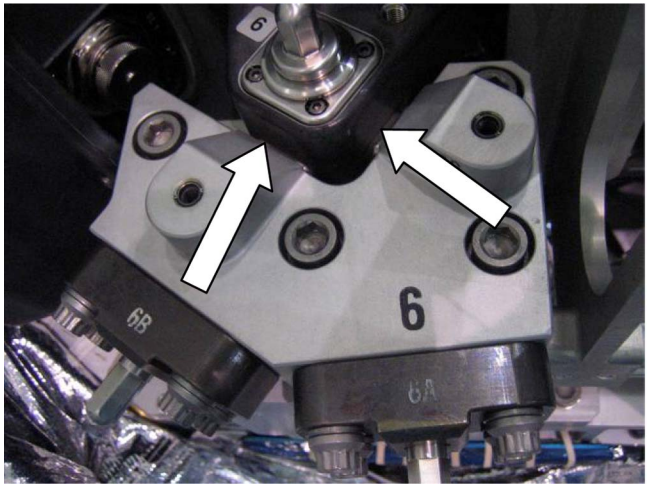

CMG Adj Shim Gap

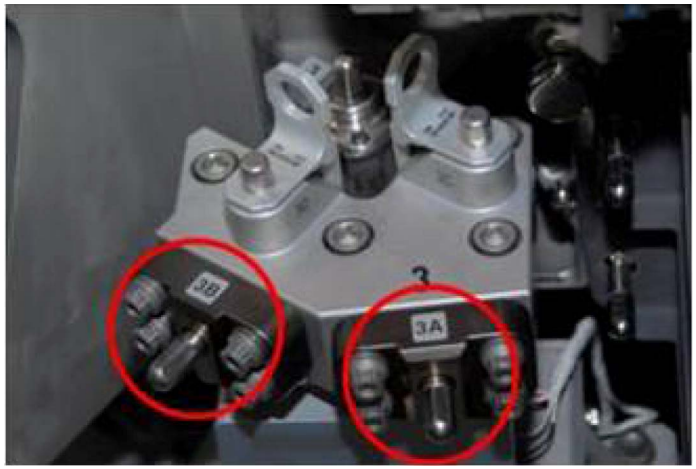

ADJ Shims 3A and 3B

ADJ Shims 6A and 6B

CMG TRANSFER – TASK DATA SHEET (Cont)

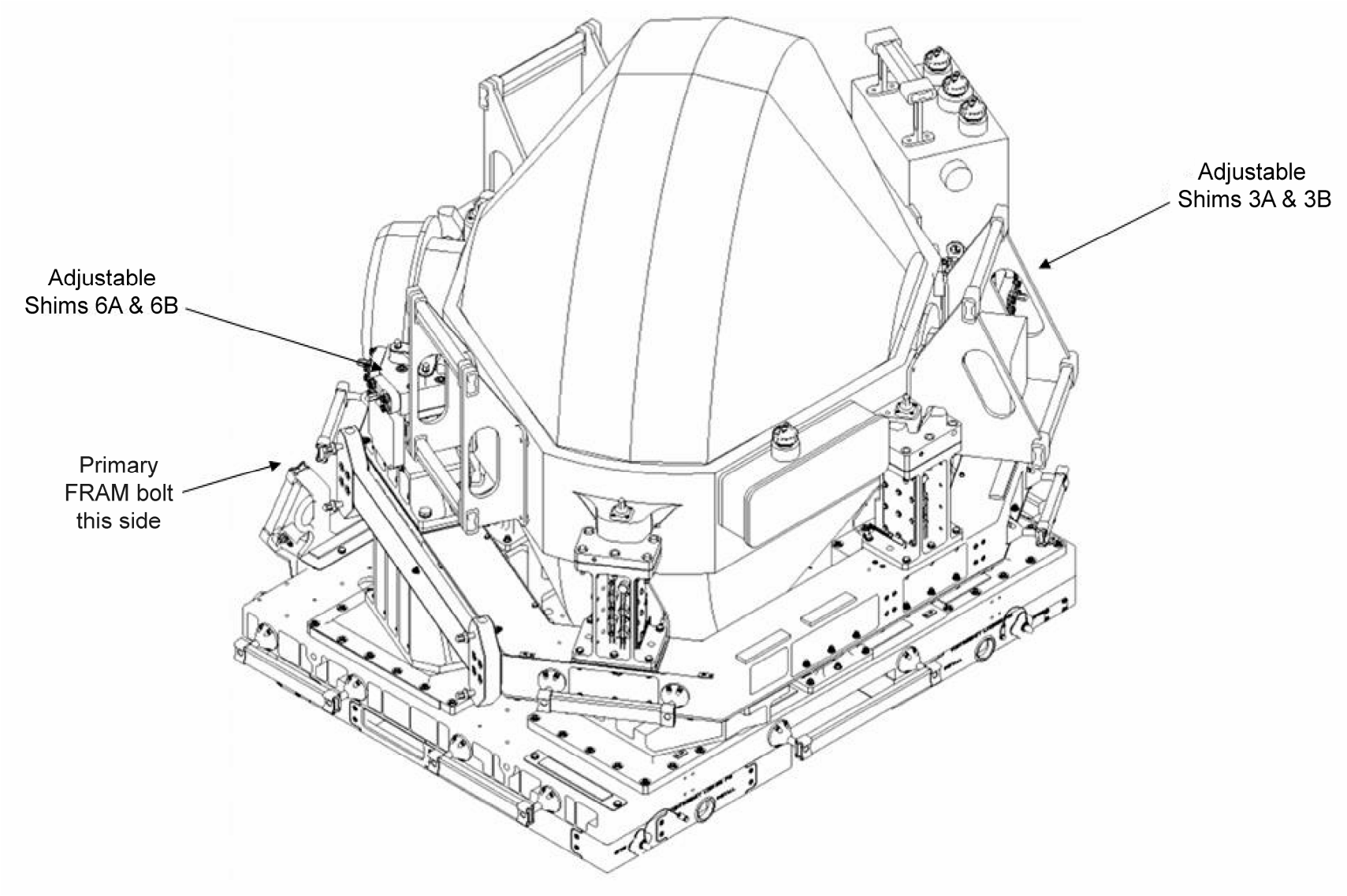

EuTEF TRANSFER (01:35)

IV/SSRMS	EV1	EV3
	EuTEF RELEASE FROM ICC (00:55)	EuTEF RELEASE FROM ICC (00:55)
1. IV: Verify ICC Power is off R1 PL AFT MNB – OFF Give EV3 GO for FRAM bolt release	CAUTION Avoid contact with PL hardware above FRAM	
2. SSRMS: Mnvr to EuTEF retrieve position		1. Reconfigure APFR roll (12, PP, **F**, 6) 2. Give SSRMS GO for mnvr for EuTEF retrieve 3. Verify cooling in good config for mnvr 4. Attach RET to EuTEF (port side)
	NOTE FRAM has a 5.5 lb magnetic soft dock at fwd 2 corners and a 3.5 lb soft dock at aft 2 corners	
	1. Restrain EuTEF; give EV3 GO for bolt release	5. On IV and EV1 GO: **PGT [A7 (9.2 ft-lb), CCW 2, 30.5], 6-ext 7/16;** verify 0 turn count Release primary FRAM bolt ~11 turns to hard stop (push ~10 lb to release locking tabs) 6. Reset **PGT [CW2]** 7. Stow PGT 8. Lift EuTEF from PFRAM
	2. Visually verify EuTEF is clear	
3. SSRMS: Mnvr to COL zenith, STBD EPF	3. Perform final PLB survey/cleanup	9. On EV1 GO, give SSRMS GO for mnvr to COL (~40 min)
4. MCC-H: Deactivate SOLAR survival heaters for EuTEF install	4. Retrieve EV3 Node 2 safety tether from Node 2 HR 0317; deploy out to COL HR 0934 5. Translate to zenith EPF, fwd side	10. Reorient EuTEF for install
5. IV: Verify with MCC-H, EPF FRAM inhibits in place for EuTEF Install PDU1 Outlet 3 SSPC 1-4 (4) – OFF PDU2 Outlet 3 SSPC 1-4 (4) – OFF PPSB PLOX1 sw – DISCHARGE PPSB PLOX2 sw – DISCHARGE	EuTEF INSTALL (00:40)	EuTEF INSTALL (00:40)
	6. Assist EV3	11. GCA SSRMS to EuTEF install 12. Position EuTEF over PFRAM using FRAM alignment stripes; soft dock EuTEF 13. GCA SSRMS for FRAM bolt access

EuTEF TRANSFER (1:35) (Cont)

IV/SSRMS	EV1	EV3
6. IV: Record EuTEF FRAM Install turns and torque Green LED Turns/Torque ❑ ____/_____ 7. IV: Record WVS imagery 8. IV: Give MCC-H/ISS GO for SOLAR and EuTEF survival heater activation	7. Restrain EuTEF on EPF 8. Receive camera from EV3 9. Take EuTEF still photography: ❑ Fwd face 10. Stow camera in crewlock bag 11. Inspect gloves; status MCC on RTV and Vectran state	14. Check tethers and tools 15. On IV and EV1 GO: Verify **PGT [A7 (9.2 ft-lb), CW2, 30.5], 6-ext 7/16;** verify 0 turn count Engage primary FRAM bolt ~11 turns to hard stop (push ~10 lb to release locking tabs) 16. Perform pull test on AFRAM 17. Remove RET from EuTEF 18. Check tools and tether secured 19. Provide WVS survey of EuTEF 20. Take EuTEF still photography: ❑ Zenith face 21. Transfer camera to EV1 22. GCA SSRMS for APFR egress 23. Egress APFR 24. Retrieve waist tether 25. Perform safety tether swap onto Node 2 safety tether • Verify load strap hook slide lock – L • √Safety tether reel unlocked 26. Stow SSRMS safety tether on APFR 27. Inspect gloves; status MCC on RTV and Vectran state 28. GCA SSRMS for APFR retrieval 29. RET to APFR 30. Retrieve APFR; stow on BRT 31. Release hitch pin; retrieve WIF adapter; stow for translation

EuTEF TRANSFER – TASK DATA SHEET

Estimated Task Duration:

	With SSRMS	Without SSRMS
Two EV Crew	01:35	TBD

Tools:

EV1	EV2
• RET • BRT • Camera • PGT 6-Ext 7/16	• RET • BRT • PGT 6-Ext 7/16

EVA Fasteners:

Fastener Name	Head Size	Qty	Install Torque (ft-lb)	Release Torque (ft-lb)	Failure Torque (ft-lb)	Turns
Pri FRAM bolt release (EuTEF)	7/16	1	---	9.2	21	11
Pri FRAM bolt engage (EuTEF)	7/16	1	9.2	---	21	11

Foot Restraints:

Task	WIF	Setting
EuTEF Transfer	SSRMS	12,PP,F,6

Inhibits:

Task	Inhibit
EuTEF Retrieve from ICC	ICC heater power off: R1 PL AFT MNB – OFF
EuTEF Install on EPF	PDU1 Outlet 3 SSPC 1-4 (4) – OFF PDU2 Outlet 3 SSPC 1-4 (4) – OFF PPSB PLOX1 sw – DISCHARGE PPSB PLOX2 sw – DISCHARGE

Notes:

1. FRAM has a 5.5 lb magnetic soft dock at fwd 2 corners and a 3.5 lb soft dock at aft 2 corners

Cautions:

1. Avoid contact with PL hardware above the FRAM

Warnings:

1. Avoid contact with grapple fixture shaft and target pin

EuTEF TRANSFER – TASK DATA SHEET (Cont)

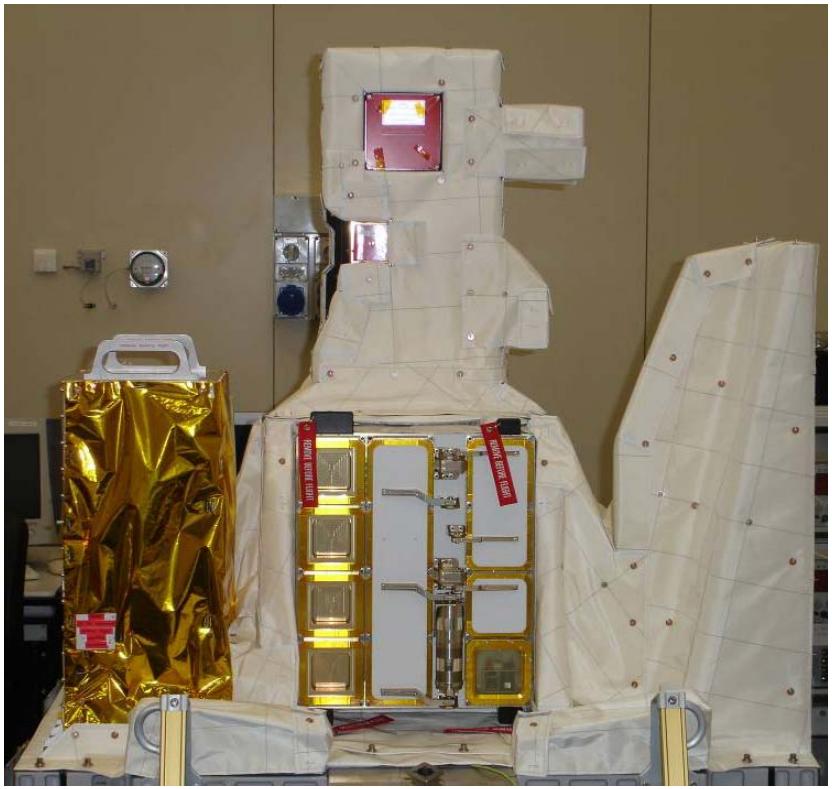

EuTEF Zenith Face

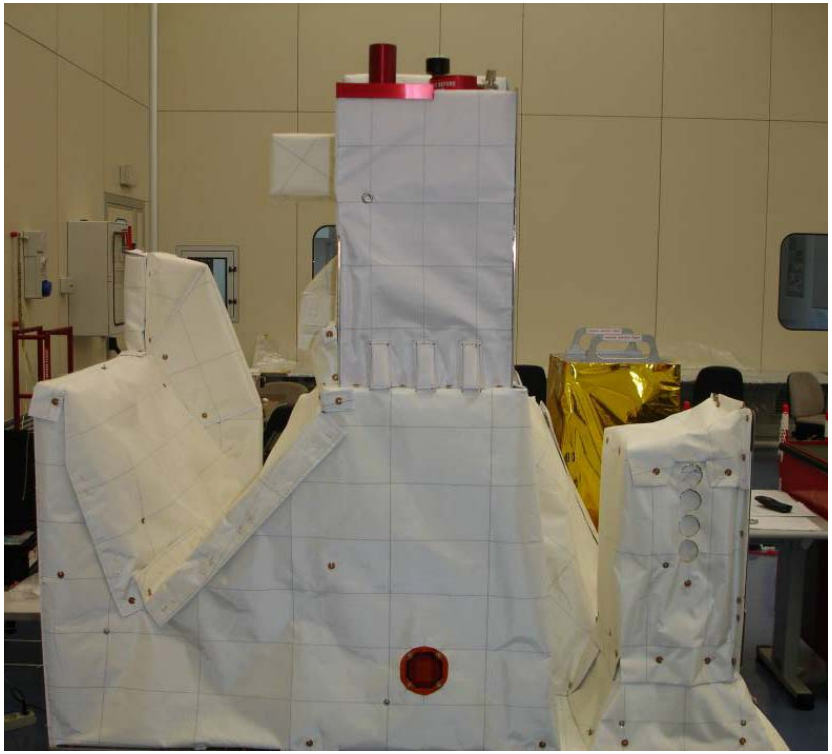

EuTEF Nadir Face

EuTEF TRANSFER – TASK DATA SHEET (Cont)

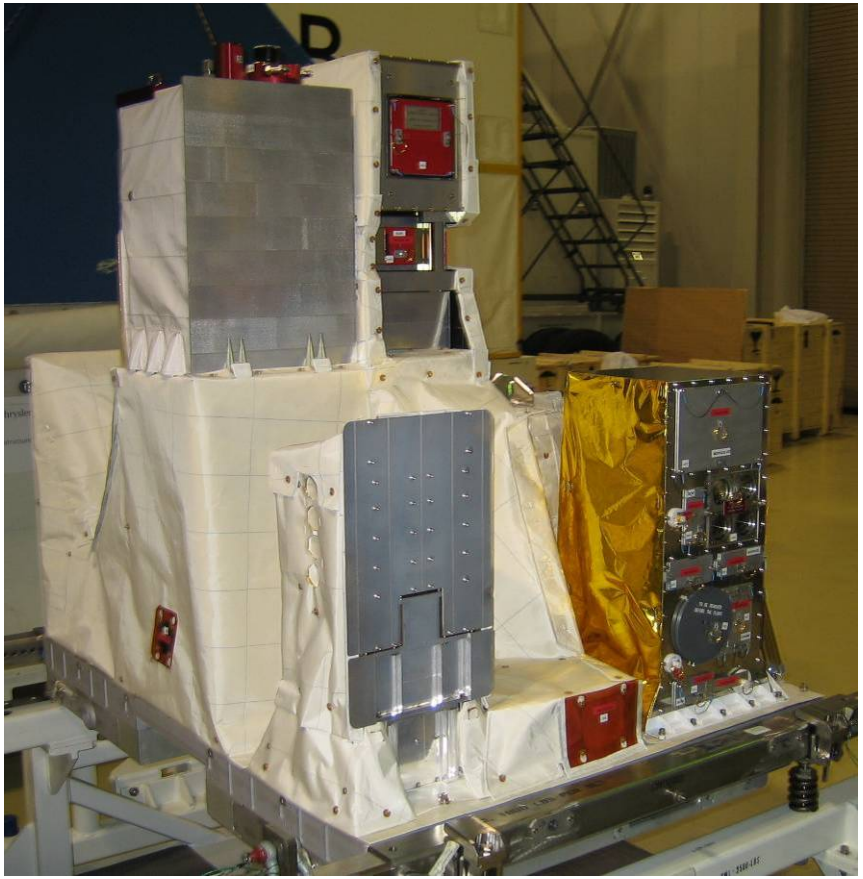

EuTEF Forward Face

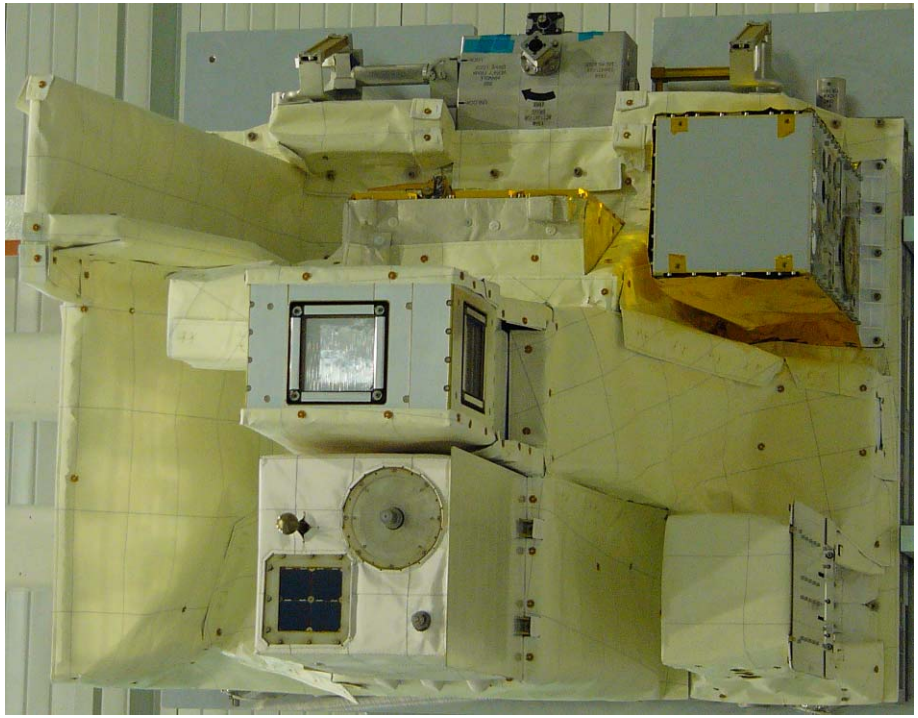

EuTEF Starboard Face

CLEANUP AND A/L INGRESS (00:35)

IV/SRMS	EV1	EV3
1. IV: Prior to ingress, perform WVS PWRDN (P/TV, WVS CUE CARD) 2. Verify Tool Inventory	CLEANUP (00:20) 1. Tool inventory 2. Retrieve crewlock bag 3. Translate to Node 2 HR 0333 4. Perform safety tether swap onto airlock safety tether • Verify load strap hook slide lock – L • √Safety tether reel unlocked 5. Stow spare safety tether on right D-ring ext 6. Translate to Airlock INGRESS (00:15) 7. Open thermal cover 8. Stow crewlock bag, handrail bag; Lg-sm RET from CMG 9. Ingress Airlock 10. Attach waist tether to fwd UIA tether point 11. Give EV3 GO to remove safety tether anchor point 12. Receive safety tether from EV3 13. Connect SCU to DCM; √SCU locked 14. WATER – OFF (fwd) 15. Go to PRE-REPRESS (DEPRESS/REPRESS Cue Card)	CLEANUP (00:20) 1. Tool inventory 2. Translate to Node 2 HR 0304 3. Perform safety tether swap onto airlock safety tether • Verify load strap hook slide lock – L • √Safety tether reel unlocked 4. Stow Node 2 safety tether on left D-ring ext 5. Stow APFR and safety tether TBD 6. Translate to Airlock INGRESS (00:15) 7. On EV1 GO, detach EV1 safety tether anchor hook from external airlock D-ring; pass in to EV1 8. Attach waist tether to EVA hatch D-ring 9. Detach safety tether anchor hook from external airlock D-ring 10. Ingress Airlock 11. Close hatch thermal cover; attach Velcro strap 12. Connect SCU to DCM; √SCU locked 13. WATER – OFF (fwd) 14. Verify outer hatch clear of hardware 15. EV Hatch – verify handle position per hatch decal; close and lock 16. Go to PRE-REPRESS (DEPRESS/REPRESS Cue Card)
	CAUTION Do not close hatch until EMU water – OFF for 2 min	

COLUMBUS OUTFITTING

BLOCK A – HANDRAIL INSTALLATION

1. Arm HR soft dock (push both buttons)
2. Install HR to seat track direction arrow on bottom
3. **PGT [A2 (3.8 ft-lb), CW2, MTL 30.5], 6-ext 7/16**: Engage handrail bolts (2) ~8 turns to torque
4. Report torque and turns to IV

BLOCK B – WIF INSTALLATION

1. Pull up side lift-tabs on WIF
2. Slide WIF over dovetail on base
3. Release lift-tabs to engage locking pins in base receptacles
4. Verify wings down

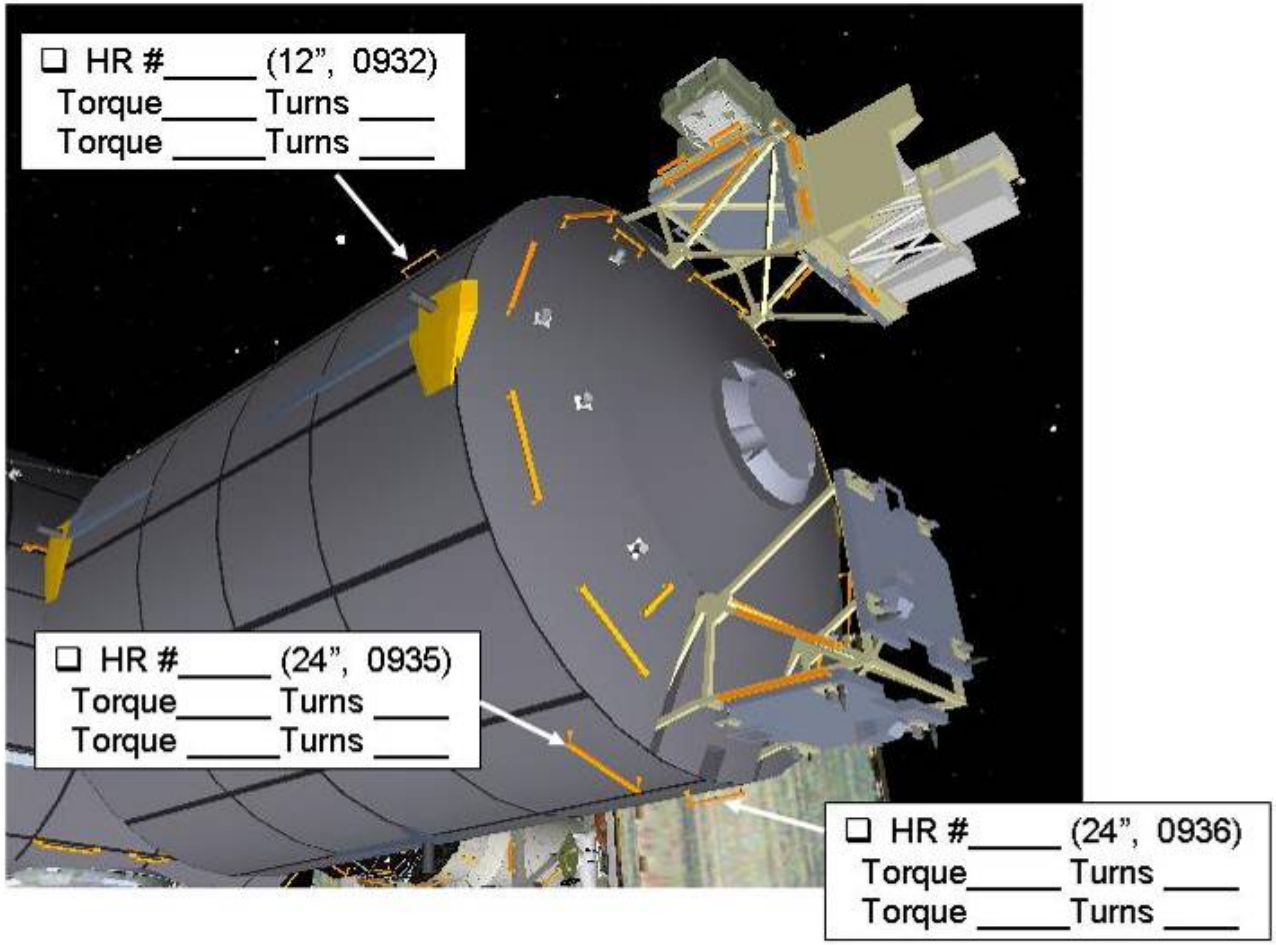

COLUMBUS OUTFITTING (Cont)

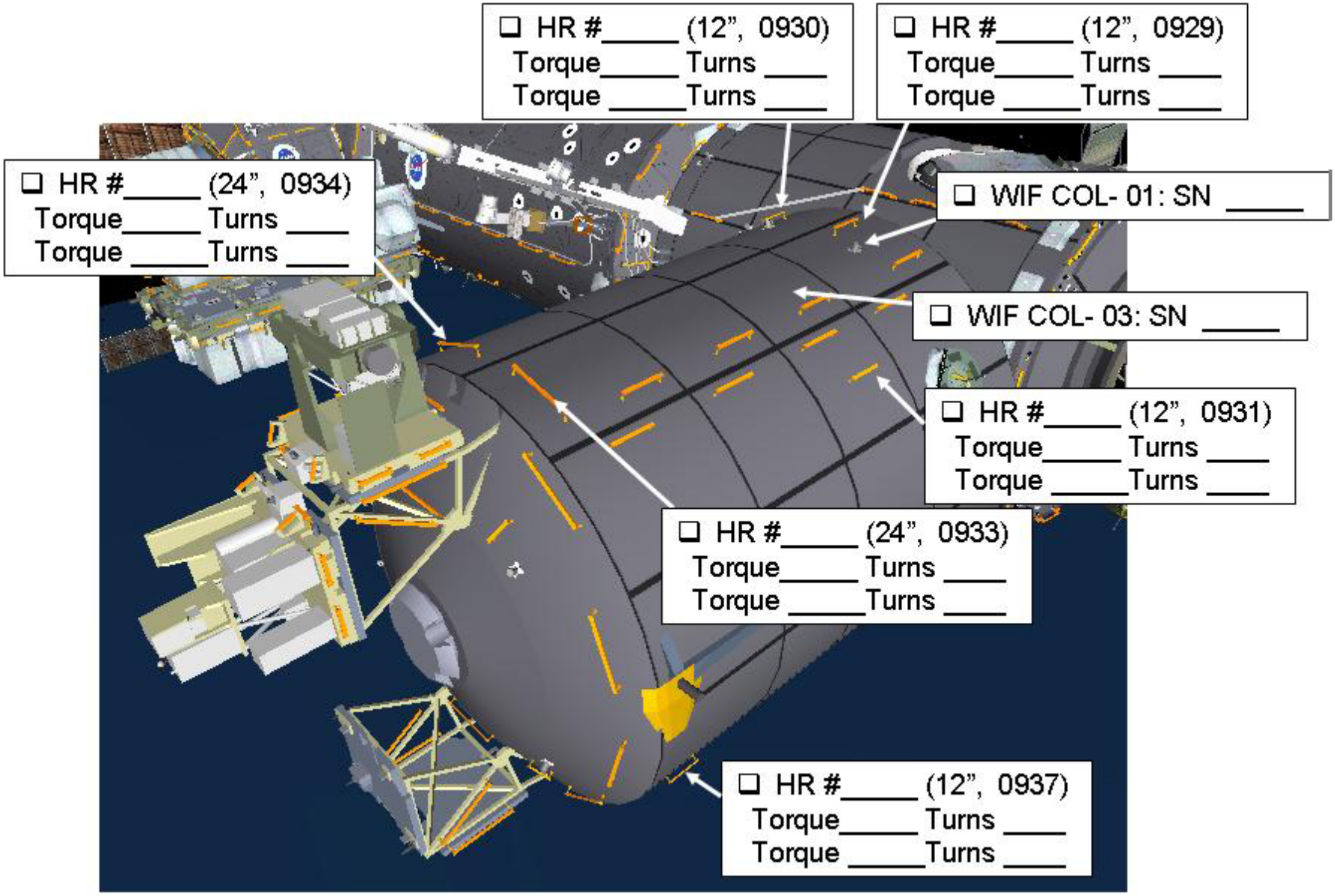

COLUMBUS OUTFITTING (Cont)

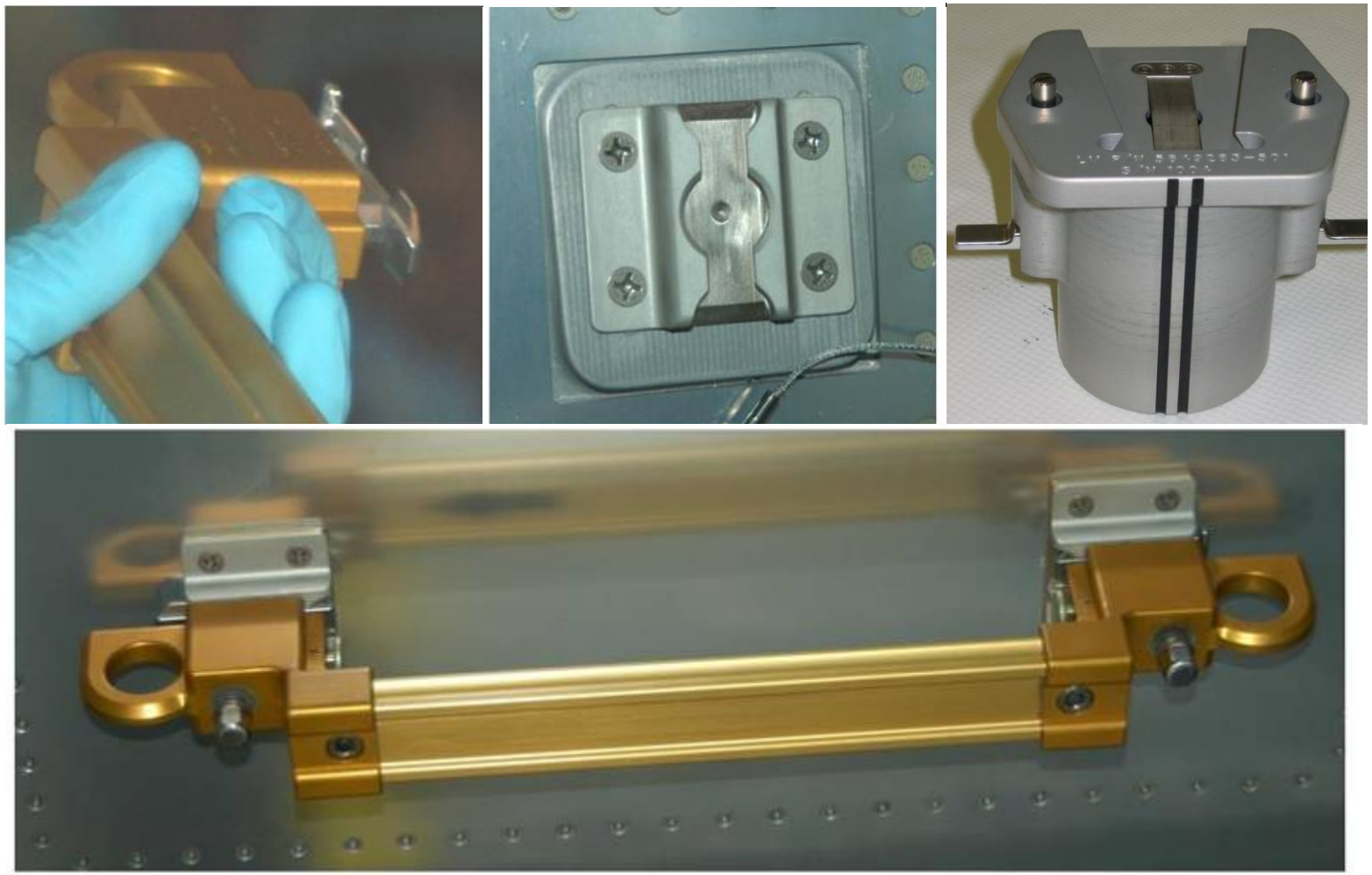

LAB MMOD SHIELD CLEANUP (00:30)

IV/RMS	EV2 (FF)	EV3 (FF)
	SETUP 1. Retrieve CL Bag 2. Translate up stbd side of Lab to H2 Vent MMOD shield (Lab FWD zenith); shield C2-03 (one w/meatball) 3. Temp stow bag 4. BRT to HR 270 5. Using T-Tool that is in place, attempt to move shield slightly (see if the center fastener is stuck in hard); may need to loosen Adj tethers PLAN A 6. Attempt installation of center and stbd fasteners (2 of 3 fasteners required) 7. If successful, skip to cleanup; if unsuccessful, go to Plan B PLAN B 8. Wire tie shield in place (1 wire tie = 1 Dzus) NOTE Wire tie must positively capture the Dzus fastener (either 2 wraps around or 1 wrap and a double twist) and positively capture structure on the Lab. Wire tie must pull shield flat against structure and in toward centerline of module. Verify both ends of wire tie attached securely so that if wire tie breaks each end will still be attached 9. Take closeout photos of shield and tiedown 10. If successful, skip to cleanup; if unsuccessful, go to Plan C	SETUP 1. Translate up port side of Lab to H2 Vent MMOD shield (Lab FWD zenith); shield C2-03 (one w/meatball) 2. BRT to HR 269 as reqd PLAN A 3. Attempt installation of port fastener (2 of 3 fasteners required) 4. If successful, skip to cleanup; if unsuccessful, go to Plan B PLAN B 5. Wire tie shield in place (1 wire tie = 1 Dzus) NOTE Wire tie must positively capture the Dzus fastener (either 2 wraps around or 1 wrap and a double twist) and positively capture structure on the Lab. Wire tie must pull shield flat against structure and in toward centerline of module. Verify both ends of wire tie attached securely so that if wire tie breaks each end will still be attached 6. Take closeout photos of shield and tiedown 7. If successful, skip to cleanup; if unsuccessful, go to Plan C

LAB MMOD SHIELD CLEANUP (00:30) (Cont)

IV/RMS	EV2 (FF)	EV3 (FF)
	PLAN C 11. Install LDTDT to stretch across the shield (HR 0269 stbd standoff to HR 0280 nadir standoff) 12. Exchange short MMOD tool for Long MMOD tool; one crewmember must retain positive control of shield 13. Install Adj from T tool to HR 0270 (13A Adj tethers may not remain EVA) 14. After ~5 min revisit LDTD and retighten; strap may loosen due to stretching 15. Take closeout photos of shield and tiedown CLEANUP 16. Retrieve 3 Adj tethers that were installed on shield; stow in trash bag (13A adj tethers left EVA may not be used and must be returned to Houston)	PLAN C 8. Retrieve Long Duration Tie down tether (LDTDT) and Long MMOD Tool from Airlock 9. Install LDTDT to stretch across the shield (HR 0269 stbd standoff to HR 0280 nadir standoff) 10. Exchange short MMOD tool for Long MMOD tool; one crewmember must retain positive control of shield 11. Install new Adj from T tool to HR 0270 (13A Adj tethers may not remain EVA) 12. After ~5 min revisit LDTD and retighten; strap may loosen due to stretching 13. Take closeout photos of shield and tiedown CLEANUP 14. Retrieve Bag(s); attach to BRT

APFR Setting (good for clamshell):
LAB WIF 11 [9, NN, L, 11]

LAB MMOD SHIELD CLEANUP – TASK DATA SHEET

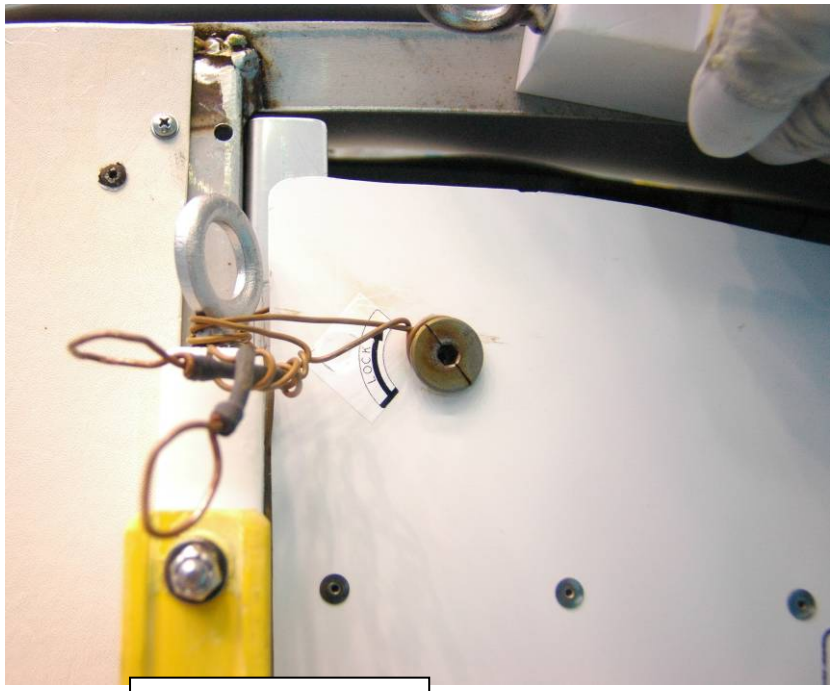

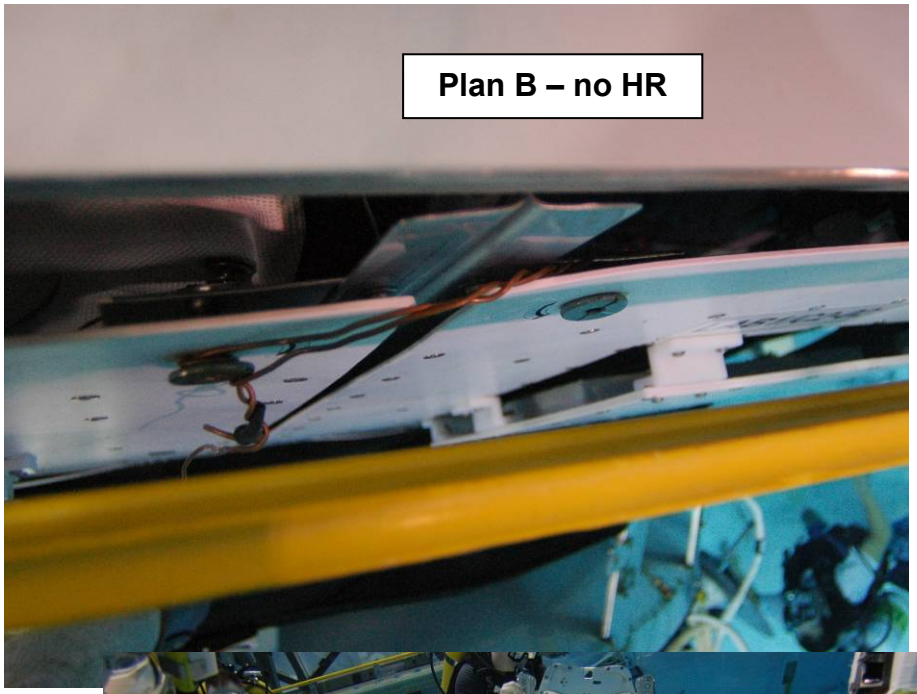

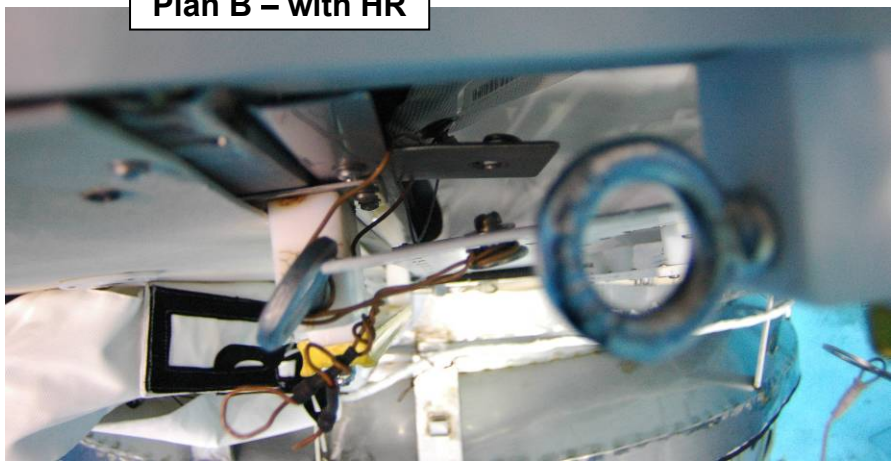

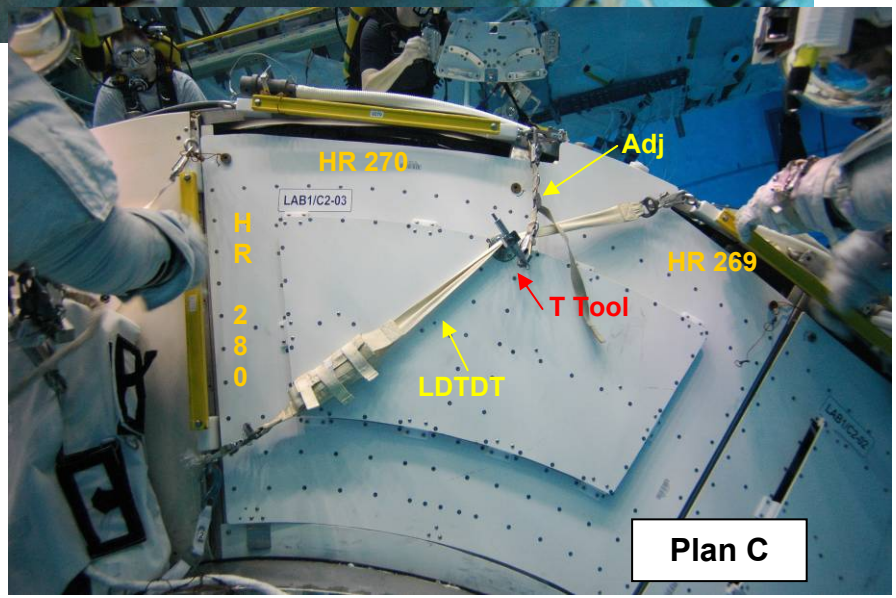

NOTE: These photos are examples of wire tie options achieved in the NBL; actual wire tie routing will be developed real

NODE MMOD SHIELD CLEANUP (00:30)

IV/RMS	EV2 (FF)	EV3 (FF)
	SETUP 1. Translate to Node LAN cable shield (Node FWD port); using Lab nadir stbd path; shield C2-02 2. Temp stow CL Bag 3. BRT to Lab HR 0209 4. Assess alignment; may need to loosen Adj tethers PLAN A 5. Attempt installation of center and nadir fasteners (2 of 3 fasteners required) 6. If successful, skip to cleanup; if unsuccessful, go to Plan B PLAN B 7. Wire tie shield in place (1 wire tie = 1 Dzus) NOTE Wire tie must positively capture the Dzus fastener (either 2 wraps around or 1 wrap and a double twist) and positively capture structure on the Lab. Wire tie must pull shield flat against structure and in toward centerline of module. Verify both ends of wire tie attached securely so that if wire tie breaks each end will still be attached 8. Take closeout photos of shield and tiedown 9. If successful, skip to cleanup; if unsuccessful, go to Plan C	SETUP 1. Translate to Node LAN cable shield (Node FWD port); using Lab nadir port path; shield C2-02 2. Fairlead tether clear of C2-02 3. BRT or local tether to HR 140 4. Attempt installation of MMOD shield; provide basic alignment and shield manipulation per EV2 directions PLAN A 5. Attempt installation of zenith fastener (2 of 3 fasteners required) 6. If successful, skip to cleanup; if unsuccessful, go to Plan B PLAN B 7. Wire tie shield in place (1 wire tie = 1 Dzus) NOTE Wire tie must positively capture the Dzus fastener (either 2 wraps around or 1 wrap and a double twist) and positively capture structure on the Lab. Wire tie must pull shield flat against structure and in toward centerline of module. Verify both ends of wire tie attached securely so that if wire tie breaks each end will still be attached 8. Take closeout photos of shield and tiedown 9. If successful, skip to cleanup; if unsuccessful, go to Plan C

NODE MMOD SHIELD CLEANUP (00:30) (Cont)

IV/RMS	EV2 (FF)	EV3 (FF)
	PLAN C 10. Install LDTDT to stretch across the shield (HR 145 stbd/nadir standoff to HR 142 zenith standoff) 11. Install Adj from T-tool to HR 0141 (13A Adj tethers may not remain EVA) 12. After ~5 min revisit LDTD and retighten; strap may loosen due to stretching 13. Take closeout photos of shield and tiedown CLEANUP 14. Retrieve 3 Adj tethers that were installed on shield; stow in trash bag (13A adj tethers left EVA may not be used and must be returned to Houston) 15. Perform Tool Inventory 16. Inspect gloves; status MCC on RTV and Vectran state 17. Translate to Airlock	PLAN C 10. Retrieve Long Duration Tie down tether (LDTDT) 11. Install LDTDT to stretch across the shield (HR 145 stbd/nadir standoff to HR 142 zenith standoff) 12. Install new Adj from T-tool to HR 0141 (13A Adj tethers may not remain EVA) 13. After ~5 min revisit LDTD and retighten; strap may loosen due to stretching 14. Take closeout photos of shield and tiedown CLEANUP 15. Perform Tool Inventory 16. Retrieve CL Bag (as reqd) 17. Inspect gloves; status MCC on RTV and Vectran state 18. Translate to Airlock

APFR Setting (good for clamshell):
Node WIF 5 [4, QQ, G, 12] or [4, PP, J, 12]

NODE MMOD SHIELD CLEANUP (00:30) – TASK DATA SHEET

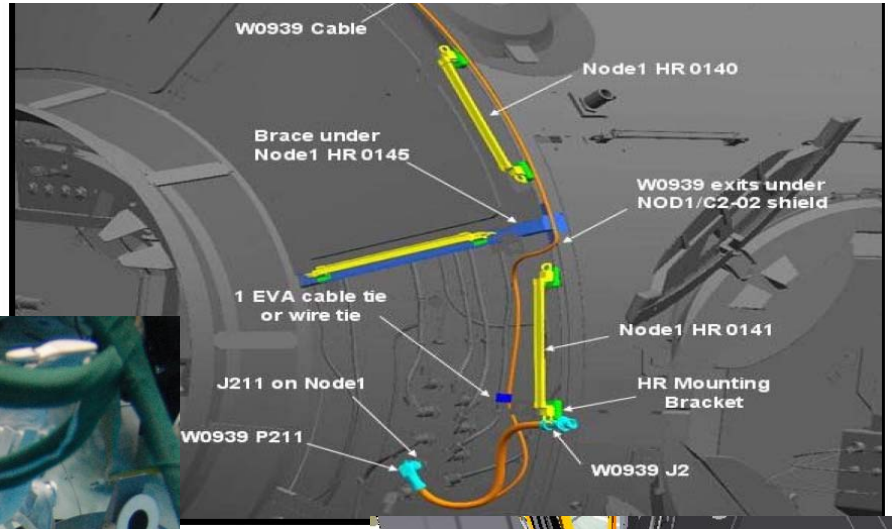

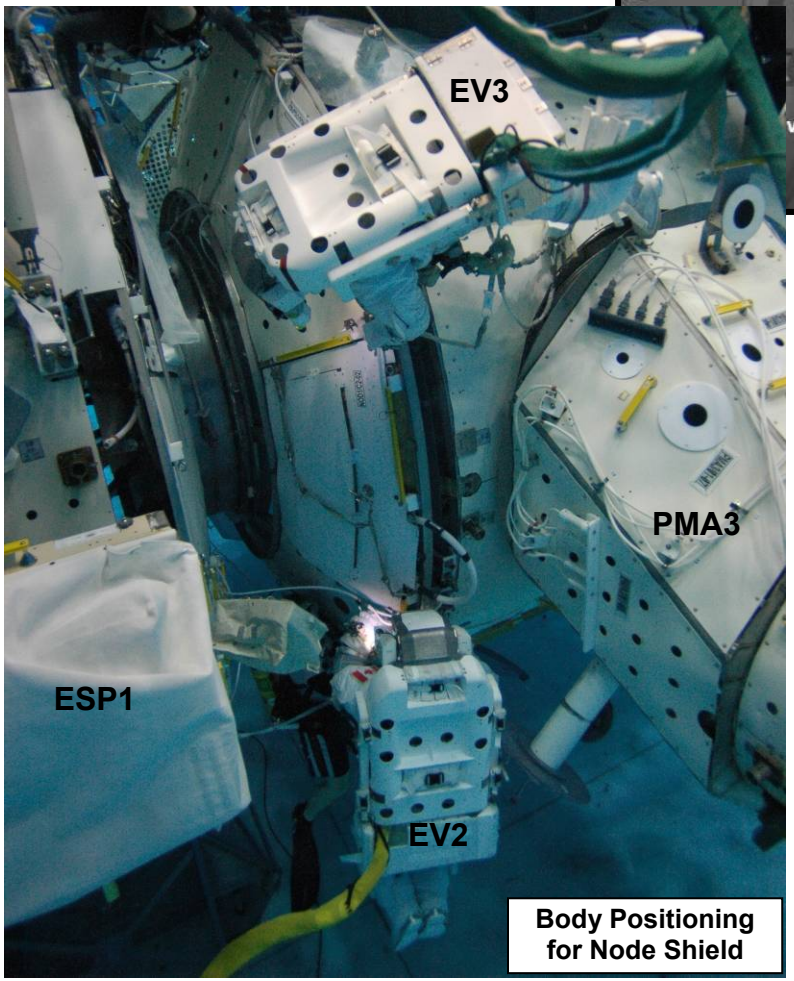

Body Positioning for Node Shield

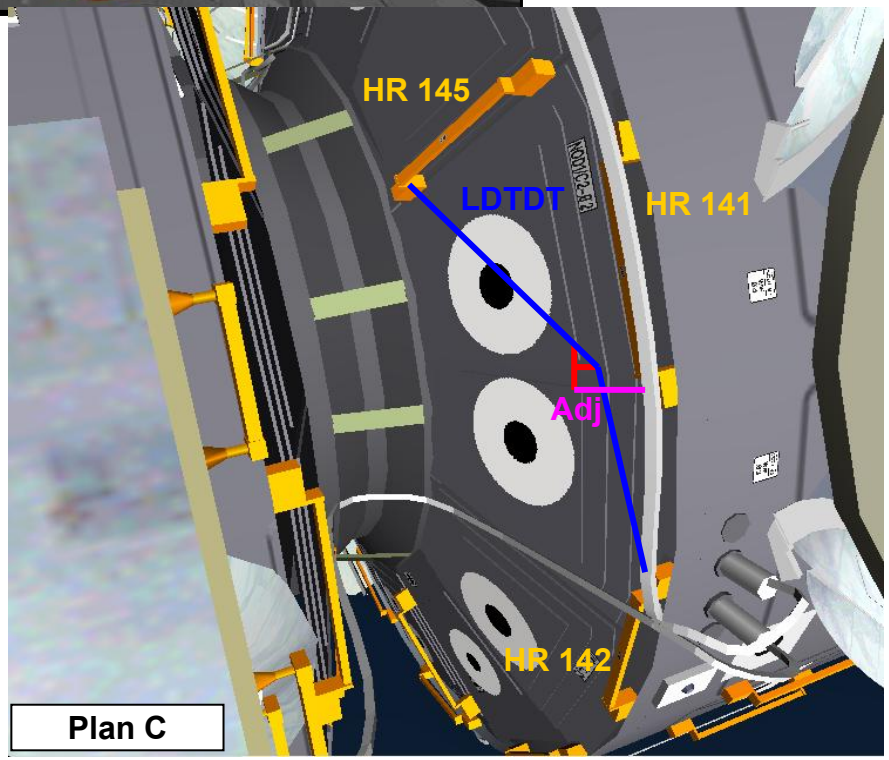

Plan C

This Page Intentionally Blank

TOOLS AND STOWAGE

PORT LIGHTWEIGHT TOOL STOWAGE ASSEMBLY (TSA) ..... TEMP FS 8-2
PGT CHECKOUT 8-3
PGSC-PGT CONNECTION (A31P AND 760XD) 8-4
PROGRAM PGT SETTINGS 8-5
DOWNLOAD/ERASE EVENT LOG 8-5
PGT CONTINGENCIES 8-6
PGT STANDARD SETTINGS 8-7
EVA TOOLS MANAGEMENT ..... FS 8-9
APFR MANAGEMENT – STS-122 (1E) ..... FS 8-12
SAFETY TETHER CONFIGURATION – STS-122 ..... FS 8-13

PORT LIGHTWEIGHT TOOL STOWAGE ASSEMBLY (TSA)

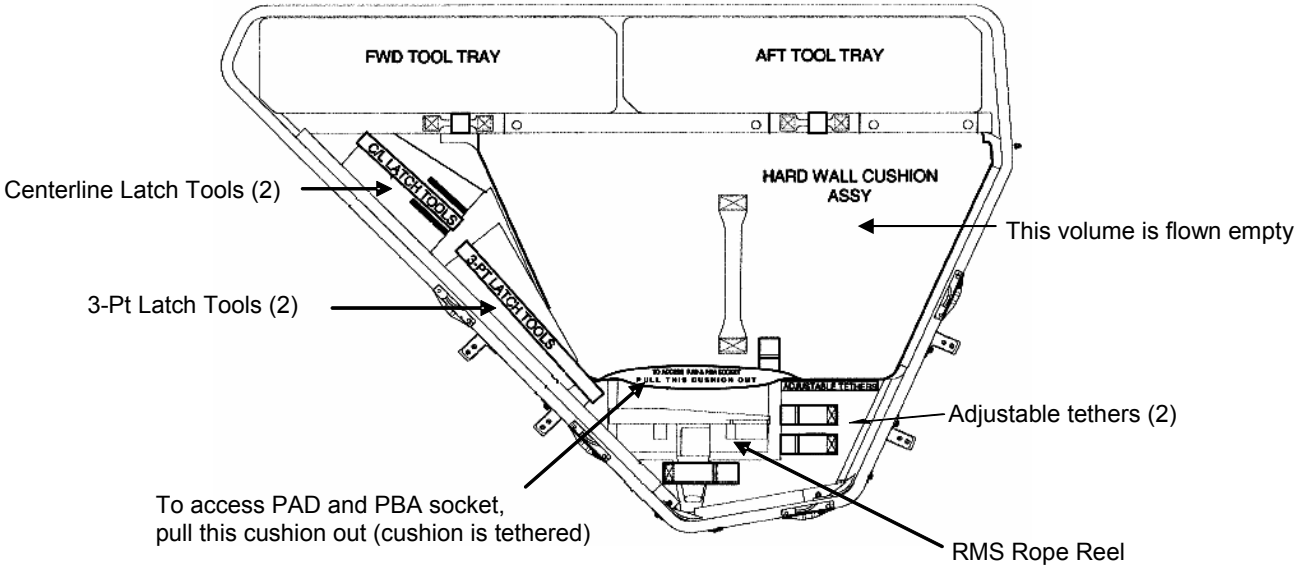

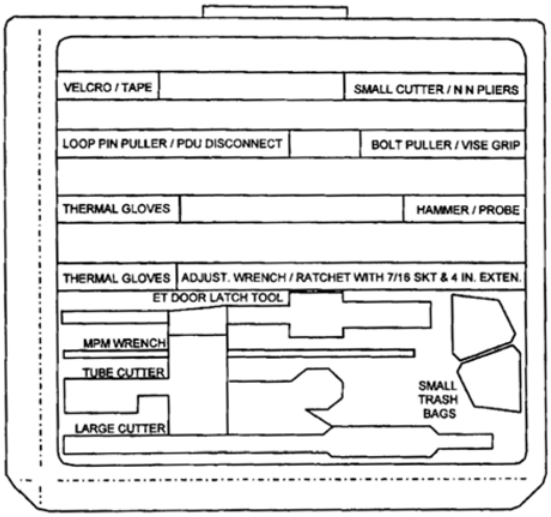

Forward Tray layout and Labels

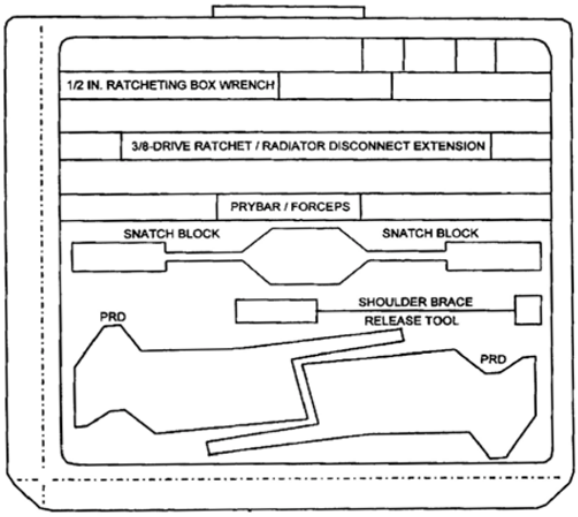

Aft Tray Layout and Labels

Flight Day 5 – EVA 1 Tool Deconfig/EVA 2 Tool Config

1. Retrieve a mesh bag, label “ISS Temp Stow bag”
2. Deconfigure NTA bag:
   - ❑ Leave socket caddy, 7.8-ext 5/8 socket, and ret in bag
   - ❑ Place the TM on a non-integral ret
   - ❑ Keep NTA bag in Airlock

3. Deconfigure PDGF bag:
   - ❑ Remove T-handle Tools (3). Distribute as follows:

Item Description	Qty.	Part No.	Serial No.	Stowage
1/4-in & 1/2-in Allen Wrench Assy (MMOD Shield T-handle Tool)	□ 2	SED39127091-301 (short)	1001 1003	Fish stringer for EVA 2 ISS Temp Stow or Crewlock bag #4
	□ 1	SED39127091-303 (long)	1018	Airlock Contingency Tools Crewlock bag

   - ❑ Remove 12-Ext 7/16 and 6-Ext 7/16 sockets from caddy; stow 12" socket in ISS Temp Stow bag. Stow 6" socket in EVA 3 bag. Stow caddy on EV1 MWS T-Bar
   - ❑ Remove 7/16" box end wrench; stow in EVA Tools Transfer bag
   - ❑ Remove all tethers and stow in airlock tether staging area
   - ❑ Stow Crewlock bag in airlock endcone

4. Deconfigure Large Trash bags (2) (CBM Seal Covers)
   - ❑ Remove CBM Seal Covers (8); stow in EVA Tools Transfer bag
   - ❑ Remove all tethers and stow in airlock tether staging area
   - ❑ Stow Large Trash bags in A/L1O0 behind closeout

5. Deconfigure Fish Stringer
   - ❑ Remove airlock 85-ft safety tethers and stow in Airlock Contingency Tools Crewlock bag
   - ❑ Verify camera removed (charging)
   - ❑ Leave fish stringer (w/T-handle tool from step 2) in Airlock

6. From EVA Tools Transfer bag, retrieve:
   - ❑ 4 MLI Trunnion/Pin cover; stow on fish stringer
   - ❑ 3rd Ballstack; place in ISS Temp Stow bag
   - ❑ Keel Pin MLI; place in EVA 3 bag
   - ❑ Wire Ties; place in ISS Temp Stow bag

7. Remove the following from Airlock Contingency Tools Crewlock bag and stow as indicated:

Locker	Item Description	Qty.	Stowage
A/L Contingency Tools Crewlock bag	7.8-Ext 5/8 rigid socket	□ 1	EV1 socket caddy
	TPS Scraper	□ 1	ISS Temp Stow
	Ret	□ 1	Tether staging area

8. Remove PDGF Connector caps (J400 & J401 caps) from EV2’s trash bag; place in Ziplock bag and label “PDGF Connector Caps”. Stow in EVA Tools Transfer bag
9. Remove 6-Ext 7/16 from EV1’s and EV2’s PGTs; stow in EVA 3 bag
10. Retrieve EVA 2 bag and distribute as follows:
    - ❑ Round Scoop in NTA bag on a ret
    - ❑ Wire Tie Caddy in NTA bag
11. Retrieve Wire Tie Caddy from Airlock Staging bag; verify 9 wire ties (refill if reqd); place in NTA bag
12. Perform EVA 2 TOOL CONFIG in EVA 2 Timeline pages (section 7)

Flight Day 7 – EVA 2 Tool Deconfig/EVA 3 Tool Config

1. Deconfigure NTA bag
    - ❑ Deconfigure fish stringer:
        - o Remove T-handle tool; stow in ISS Temp Stow bag
        - o Remove all tethers; stow tethers and fish stringer in airlock tether staging area
    - ❑ Remove round scoop; stow in Crewlock bag #4
    - ❑ Remove Round Torque Multiplier
    - ❑ Remove 5/8 socket from TM; stow socket and TM in Crewlock bag #4
    - ❑ Verify camera removed (charging)
    - ❑ Remove Wire Tie Caddies; stow 1 in Airlock Staging bag; stow 1 in ISS Temp Stow bag
    - ❑ Remove socket caddies; return tethers to tether staging area; place 7.8-ext 5/8 sockets (2) and caddies (2) in ISS Temp Stow bag
    - ❑ Remove remaining interior tethers; stow in tether staging area
    - ❑ Leave crewlock bag in Airlock (becomes COL Crewlock bag)

2. Place MUT EE (3) and Ballstacks (2) in ISS Temp Stow bag; return adj tethers to tether staging area
3. Retrieve EVA 3 bag and distribute as follows:
    - ☐ OIH bag – label handrails (932-937) and stow in Airlock
    - ☐ 2 COL WIFs – COL Crewlock bag
    - ☐ 2 6-ext 7/16 sockets – one to each EV's PGT
    - ☐ Keel Pin cover – COL Crewlock bag
    - ☐ HRs 929, 930, 931 – label handrails and stow in COL Crewlock bag

4. Retrieve used wire ties (from SSPTS and NTA electrical cable) from EV1's & EV2's small trash bags; discard
5. Deconfigure Airlock Contingency Tools Crewlock bag:
    - ☐ Remove 2 85-ft safety tethers; place by EV1 and EV3 suits
    - ☐ Remove 2 rets; stow in tether staging area

6. Perform EVA 3 TOOL CONFIG in EVA 2 Timeline pages (section 7)

Flight Day 9 – EVA 3 Tool Deconfig

1. Stow ret (Lg-sm from CMG, s/n _____) in EVA Tools Transfer bag
2. Deconfigure COL Crewlock bag
    - ❑ Remove any uninstalled handrails or WIFs; stow in ISS Temp Stow bag
    - ❑ Verify camera removed (charging)
    - ❑ Remove all tethers and stow in airlock tether staging area
    - ❑ Stow Crewlock bag in airlock endcone

3. Deconfigure COL OIH Handrail bag
    - ❑ Remove any uninstalled handrails; stow in ISS Temp Stow bag
    - ❑ Remove all tethers; stow in tether staging area
    - ❑ Stow bag in EVA Tools Transfer bag

4. Deconfigure Airlock Contingency Tools Crewlock bag
    - ☐ Return all tethers (including waist) to airlock tether staging area
    - ☐ Remove RAD, 2" 7/16 socket, & socket caddy; stow in ISS Temp Stow bag
    - ☐ Remove EVA Ratchet; stow in Crewlock bag #4 or ISS Temp Stow bag
    - ☐ Remove Vise grips; stow in ISS Temp Stow bag
    - ☐ Remove long duration tie down tethers & T-handle tools; stow in ISS Temp Stow bag
    - ☐ Stow Crewlock bag in endcone

5. Remove PGTs from MWS; remove sockets; remove batteries. Stow PGTs and sockets in CTB 1161 PGT H/W. Return batteries to BSA

6. Stow following tethers in EVA Tools Transfer Bag:

Item Description	Qty.	Part No.	Serial No.
Adjustable Equipment tether (eq-eq w/slide lock)	□ 6	SEG33106945-307	1080 1081 1082 1083 1084 1085
Retractable Equipment tether	□ 2	SEG33106164-381	4057 4070
85-ft Safety Tether	□ 2	SED33116109-307	1009 1010

7. Remove all other tethers and stow in ISS airlock tether staging area
8. Remove WIF Adapter from EV3 MWS; stow in ISS Temp Stow bag or CTB 1075
9. Remove small trash bags; stow in A/L1O0 behind closeout in CTB 1075 or in ISS Temp Stow bag
10. Remove BRTs; stow in CTB 1013 (A/L1O0 behind closeout) or ISS Temp Stow bag
11. Remove Velcro/Tape caddy from airlock Staging bag (verify s/n 1007); place in EVA Tools Transfer bag
12. If time allows, restow following ISS Temp Stow bag hardware as indicated

ISS Temp Stow bag: Item and Quantity	Nominal ISS Stowage
2 T-handle Tools (short)	Crewlock bag #4
1 T-handle Tool (long)	Crewlock bag #4
1 Scraper	A/L 1D2 behind closeout, CTB 1022
3 Ballstacks	A/L 1O0 behind closeout, CTB 1013
52 Wire Ties	A/L 1O0 behind closeout
Wire Tie Caddy	CTB 1075
2 7.8-ext 5/8 rigid sockets	CTB 1161
3 Socket Caddies	CTB 1161
3 MUT EE	A/L 1O0 behind closeout, CTB 1013
Uninstalled COL WIFs	TBD
Uninstalled COL HRs	TBD
2-ext 7/16 rigid socket	CTB 1161
RAD	CTB 1161
EVA Ratchet	Crewlock bag #4
Vise Grips	A/L 1O1_B1 (or keep in A/L endcone? TBD)
WIF Adapter	CTB 1075
2 ISS small trash bags	A/L 1O0 behind closeout, CTB 1075
2 BRT	A/L 1O0 behind closeout, CTB 1075
12-ext 7/16 socket	CTB 1161
Mounting strip assembly – no PLA (4)	FGB_102 Overlay CTB 1066
Long duration tie down tethers	TBD

APFR MANAGEMENT – STS-122 (1E)

APFR DESIGNATOR	APFR 1 S/N 1004 (8A, 13A.1 Pitch knob problem)	APFR 2 S/N 1006 (US EVA 9 Pitch knob problem, 10A sticky locking collar)	APFR 3 S/N 1005 (no pitch knob prob 9A-inc 12 suspected sharp edge on locking collar)	APFR 4 S/N 1002 (TS, old ORU tether, heat shield)	APFR 5 S/N 1003 (TS, old ORU tether, heat shield)	APFR 6 S/N 1007 (heat shield removed on 12A.1 stage)	APFR 7 S/N 1008 (locking collar difficult) Ingress aid	IAPFR 1	IAPFR 2	CRANE (old ORU tether)	TS	ORU stanchion/ TERA headless	OTSD S/N 1002
Post US EVA 10 (Alpha)	CETA 1 WIF 4 [9,SS,F,12] Y/P [12,FF]	Lab WIF6 [6, PP, L, 12*] *might not be correct, got bumped	Brought Inside on STS-120 EVA 4 No Ingress aid	Z1 WIF 08 [7,PP,B,6] TS installed at 4 o'clock points port/nadir	PMA1 WIF 2 [12,KK,F,6]	CETA 2 WIF 5 [12, PP,F,12] Y/P [12, FF]	Lab WIF 12 [11,QQ,L12] Ingress aid	Z1 WIF 1 [12,PP,F,12]	Z1 WIF 3 [6,PP,F,12]	PMA1 WIF 5	S0 port wedge face	S0 port wedge face	
Post Stage EVAs			STBD A/L Toolbox [6,XX,F,12] Or Node 2 WIF 14 [6,PP,A,6] w/ST #66				Lab WIF 11 [1,QQ,A,12] Ingress aid						
STS-122 EVA 1													
Columbus Preps		SSRMS [12,PP,A,6]											
Payload Bay Cleanup		Node 2 WIF 14 w/55-ft safety tether											
OTSD Stow													S0 WIF 7 CL=1or 7
STS-122 EVA 2													
NTA ops		SSRMS [12,PP,F,6]											
APFR left on SSRMS		SSRMS [6,TT,F,6}											
STS-122 EVA 3													
SOLAR Install		SSRMS [12,PP,F,6]											
CMG Ops		SSRMS [12,PP,A,6]											
EuTEF Install		SSRMS [12,PP,F,6]											
Cleanup		TBD											
Post STS-122													

SAFETY TETHER CONFIGURATION – STS-122

	55-ft tethers							85-ft tethers			
	#59 S/N 1007 Sm-sm	#71 S/N 1021 Lg-sm	#72 S/N 1022 Lg-sm (had retraction issues during 10A EVA 4)	#73 S/N 1023 Lg-sm (AR written against this one)	#60 S/N 1008 Lg-sm (LAS needs inspection prior to use)	#70 S/N 1020 Lg-sm (LAS needs inspection prior to use)	#66 S/N 1016 Sm-sm	#26 S/N 1006 Lg-sm	#28 S/N 1008 Lg-sm	#29 S/N 1009 (Shuttle safety tethers)	#30 S/N 1010 (Shuttle safety tethers)
Post 120 EVA 4	INSIDE tether staging area	INSIDE tether staging area	INSIDE tether staging area	INSIDE tether staging area	S0 HH 3539 or HH 3530 Tether on 3539 had retracting issues	S0 HH 3539 or HH 3530 Tether on 3539 had retracting issues	OUTSIDE A/L on D-ring	INSIDE tether staging area	INSIDE tether staging area		
120 stage	----------same ----------							----------same ----------			
Post 122 EVA 3	INSIDE tether staging area	INSIDE tether staging area	INSIDE tether staging area	INSIDE tether staging area	S0 HH 3539 or HH 3530 Tether on 3539 had retracting issues	S0 HH 3539 or HH 3530 Tether on 3539 had retracting issues	OUTSIDE A/L on D-ring	INSIDE tether staging area	INSIDE tether staging area	Returned to shuttle	Returned to shuttle

NOTE

During US EVA #8, EV2 reported that her 55-ft safety tether (P/N SEG33106674-307 S/N 1023, #73) was not retracting properly. EV2 attempted to perform the usual technique of pulling out some cable and then letting it reel in, but there came a point when EV2 was neither able to extend or retract the line with 6-8 ft of tether cable still extended. EV2 also cycled the tether from UNLOCK to LOCK and back to UNLOCK, with no joy. The tether was temp stowed as is until later (EV2 was attached to an 85-ft tether at this point). During EVA cleanup, EV1 attempted to troubleshoot the tether, placing it in LOCK and extending quite a few more feet of cable from the tether. When the tether was placed back in UNLOCK it retracted completely, with a little bit of coaxing for the last couple feet of cable (typical behavior). The tether was brought inside. No further action required

This Page Intentionally Blank

EMU MAINT/RECHARGE

WATER RECHARGE ..... TEMP FS 10-2
EMU POWERUP ..... TEMP FS 10-2
WATER FILL ..... TEMP FS 10-2
WATER FILL VERIFICATION ..... TEMP FS 10-2
EMU LiOH CHANGEOUT 10-4
MIDDECK EMU BATTERY RECHARGE (STAND-ALONE) 10-4a
MIDDECK EMU BATTERY RECHARGE/LiOH REPLACEMENT 10-5
INITIATE 10-5
TERMINATE 10-6
IN-SUIT EMU BATTERY RECHARGE/CHARGE VERIFICATION 10-7
INITIATE 10-7
TERMINATE 10-7
EMU POWERDOWN 10-7
HELMET LIGHT/PGT BATTERY RECHARGE 10-8
INITIATE 10-8
TERMINATE 10-9
REBA BATTERY INSTALLATION 10-9
EMU BATTERY REMOVAL/INSTALL 10-10
HELMET LIGHT BULB CHANGEOUT 10-11
REBA BATTERY RECHARGE 10-12
INITIATE 10-12
TERMINATE 10-13
STS-122 CONSUMABLES TRACKING CUE CARD ..... FS CC 10-15
STS-122 BATTERY RECHARGE PLAN ..... FS CC 10-16
POST EVA GLOVE PHOTOS – REQUIRED ..... FS 10-17

WATER RECHARGE

IF EMU NOT ALREADY POWERED UP:

EMU POWERUP

BOTH DCM
1. Retrieve, position SCUs; remove DCM covers
2. Connect SCUs to DCM, √locked
3. PWR – BATT

> CAUTION
> EMU must be on BATT pwr when airlock pwr supply is turned on

AW18H 4. PWR/BATT CHGR EMU 1,2 MODE (two) – PWR
BUS SEL (two) – MNA(MNB)

MD(flr) 5. √EMU O2 ISOL VLV – OP

AW82B 6. EV1,2 O2 vlv (two) – OP

DCM 7. PWR – SCU

WATER FILL

MO13Q 8. √ARLK H2O S/O VLV – OPEN (tb-OP)

R11L 9. √SPLY H2O TKA OUTLET – CL (tb-CL)

SM 60 TABLE MAINT

CRT 10. Use TKB quantity:
PARAM ID – ITEM 1 +0 6 2 0 4 2 0 EXEC

11. Log value before recharge

Recharge #	H2O TKB %
1	
2	
3	
4	
5	

AW82D 12. √EMU 1,2 H2O WASTE tb (two) – CL
SPLY (two) – OP (tb-OP)

13. √H2O TKB quantity decreasing

> NOTE
> Full charge requires ~15 min

WATER FILL VERIFICATION

DCM 14. √STATUS: H2O WP 8-15 psi and stable for ~30 sec (indicates charging complete)

SM 60 TABLE MAINT

CRT 15. Use TKB quantity:
PARAM ID – ITEM 1 +0 6 2 0 4 2 0 EXEC

16. Log value after recharge

Recharge #	H2O TKB %
1	
2	
3	
4	
5	

Cont next page

TOP

HOOK
VELCRO

STS-122 CONSUMABLES TRACKING CUE CARD

EV1 – Wh: EMU 3017 **EV3** – Lv: EMU 3018

EV2 – Sg: EMU 3015

SAFER Usage: s/n 1006 and s/n 1007 (spare is s/n 1004)
ERCA Usage: EV1(Wh): s/n 1010 (address16)
EV2(Sg)/EV3(Lv): s/n 1007 (address18)

	LiOH/Metox (s/n or barcode)	EMU Battery (s/n)	HL Battery (s/n)	REBA (s/n)	PGT Battery (s/n)	EMU Water Recharge PWR (s/n)
EVA 1 – FD 4	Retrieve from EV bags: Metox for Campout/10.2 s/n 0012, s/n 0013 Launched in EMUs: EV1: s/n 2024 (LiOH) EV2: s/n 2030 (LiOH)	Launched in EMUs: EV1: s/n 2065 EV2: s/n 2066	Retrieve from EV bags: EV1: 1011, 1012 EV2: 1013, 1014	Retrieve from EV bags: EV1: 1003 EV2: 1004	Retrieve from EV bags: EV1: s/n 1005 EV2: s/n 1006 (s/n 1004 in spare PGT in C-Lk Staging Bag)	
Post EVA 1 – FD 4	Regen s/n 0012, s/n 0013	No EMU Battery charging	Charge EVA 1 Batts in BSA for use on EVA 3	Charge EVA 1 Batts from BSA for use on EVA 2	Charge EVA 1 Batts in BSA for use on EVA 3	EMU Fill: PWR s/n 1012 Dump: CWC s/n 1059
FD 5		Remove previously charged batteries; Charge EVA 1 EMU Batts (s/n 2065, 2066) in BSA for EVA 3 (stow in EV bags when charge complete)	Remove from BSA and stow in EV bags for EVA 3	If removed from EMUs for charge, restow in EMUs	Remove from BSA and stow in EV bags for EVA 3	
EVA 2 – FD 6	Retrieved from MO2 bag: Metox for Campout/10.2 s/n 0007, s/n 0011 EV1: s/n 0015 (Mtx) EV2: s/n 0016 (Mtx)	Retrieved from MO2 bag: EV1: s/n 2038 EV2: s/n 2077	Retrieved from MO2 bag: EV1: 1015, 1017 EV2: 1019, 1021	EV1: 1003 EV2: 1004	Retrieved from MO2 bag: EV1: s/n 1008 EV2: s/n 1009 (s/n 1004 in spare PGT in C-Lk Staging Bag)	
Post EVA 2 – FD 6	Regen s/n 0007, s/n 0011	No EMU Battery charging	Charge EVA 2 Batts in BSA	Charge EVA 2 Batts from BSA	Charge EVA 2 Batts in BSA	EMU Fill: PWR s/n 1012 If reqd, use 1013 Dump: CWC s/n 1059
FD 7		Charge EVA 2 EMU Batts (s/n 2038, 2077) in BSA				
EVA 3 – FD 8	Retrieved from MO2 bag: Metox for Campout/10.2 s/n 0017, s/n 0020 EV1: s/n 0007 (Mtx) EV3: s/n 0011 (Mtx)	EV1: s/n 2065 EV3: s/n 2066	EV1: 1011, 1012 EV3: 1013, 1014	EV1: 1003 EV3: 1005	EV1: s/n 1005 EV3: s/n 1006 (s/n 1004 in spare PGT in C-Lk Staging Bag)	
Post EVA 3 – FD 8	Regen s/n 0017, s/n 0020	No Battery charging	No Battery charging	No Battery charging	No Battery charging	EMU Fill: PWR s/n 1013 Backup PWR: s/n 1007 Dump: CWC s/n 1059
FD 9		Retrieve EMU Batts 2065 & 2066 for charge in BSA. Will re-install in EMU when charge complete for EVA 4 use				
EVA 4 – FD 10	Retrieved from MO2 bag: Metox for Campout/10.2 s/n 0019, s/n 0021 EV2: s/n 0012 (Mtx) EV4: s/n 0013 (Mtx)	EV1: s/n 2065 EV3: s/n 2066	EV1: 1015, 1017 EV3: 1019, 1021	EV1: 1004 EV3: 1011	EV1: s/n 1008 EV2: s/n 1009 (s/n 1004 in spare PGT in C-LK Staging Bag	EMU Fill: PWR s/n 1013 Backup PWR: s/n 1007 Dump: CWC s/n 1059

EVA-5a/122/O/C

(reduced copy)

TOP
Back of 'STS-122 CONSUMABLES TRACKING CUE CARD'

HOOK
VELCRO

STS-122 BATTERY RECHARGE PLAN

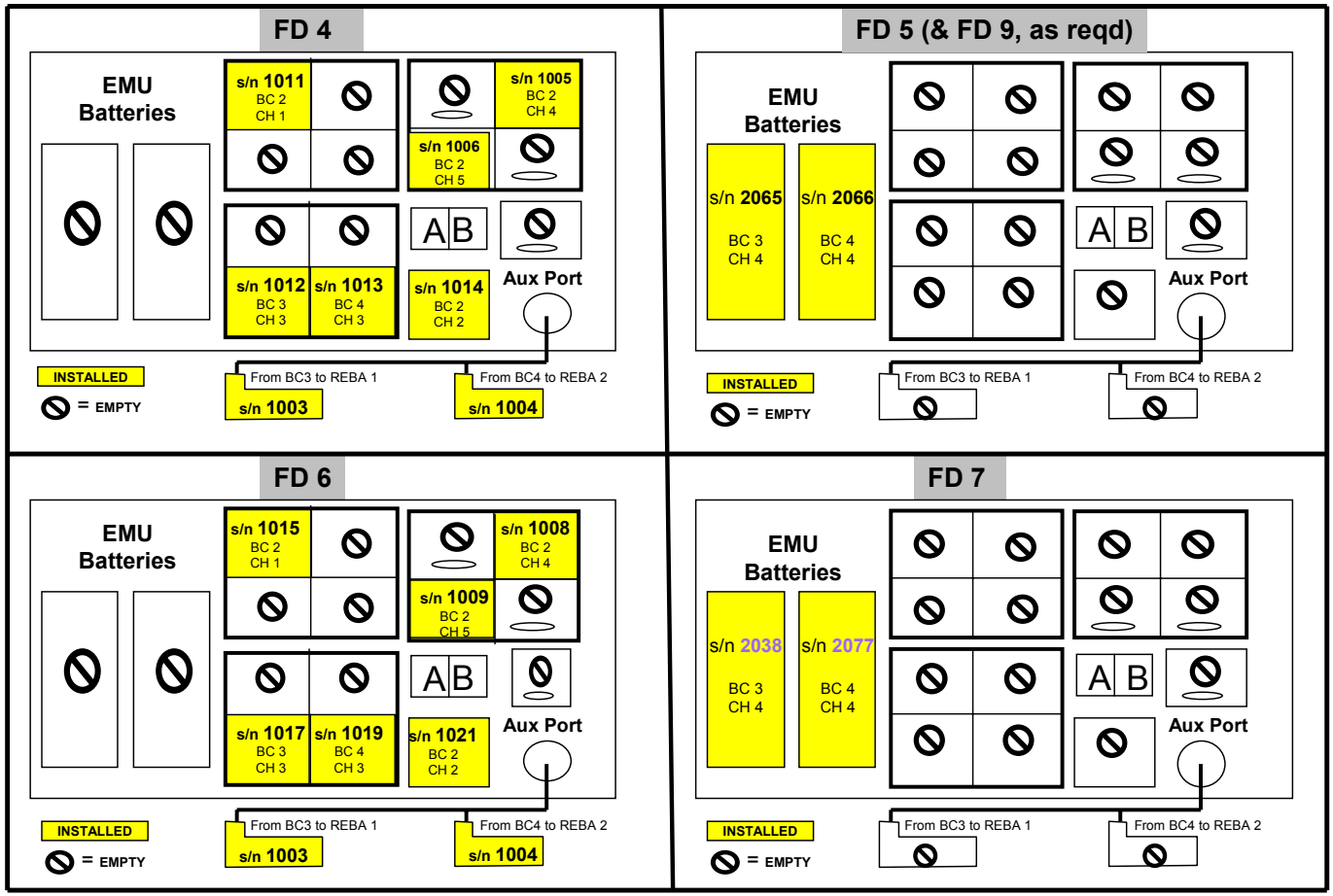

EVA-5b/122/O/C

(reduced copy)

POST EVA GLOVE PHOTOS – REQUIRED
Prefer pressurized (or un-pressurized with hands in gloves)

Camera Settings

A(Aperture Priority), 60 mm lens, f16, ISO 100, Exposure Comp = 0.0, flash mode TTL Matrix, diffuser deployed, tilt = -7 deg

Glove Photos Sequence

☐ ☐ ☐ ☐ CM identification (suit stripes, Velcro IDs)

LEFT

☐ ☐ ☐ ☐ Full palm
☐ ☐ ☐ ☐ Thumb (seam facing index finger)
☐ ☐ ☐ ☐ Index finger (seam facing thumb)
☐☐☐ Additional photos as warranted

RIGHT

☐ ☐ ☐ ☐ Full palm
☐ ☐ ☐ ☐ Thumb (seam facing index finger)
☐ ☐ ☐ ☐ Index finger (seam facing thumb)
☐☐☐ Additional photos as warranted

Additional Photos

- Detail of any damaged Vectran
- Detail of missing or cut RTV

Guidelines

- Squeeze finger caps and photograph any slices
- Manipulate TMG to show best possible views of the damage
- If not obvious, point to area of interest/concern

Use of Back-up Gloves

If EV crew switches to backup gloves
– **Inform MCC-H**

MCC-H will inform crew no later than Eq-Lk Prep to switch to backup gloves (Based on damage to Vectran and/or excessive RTV loss)

Downlink Photos Post EVA

- Place photos in a clearly marked folder for easy EVA access

Crew Identification

(Suit Stripes, Velcro IDs)

Full Palm

Thumb (seam facing index finger)

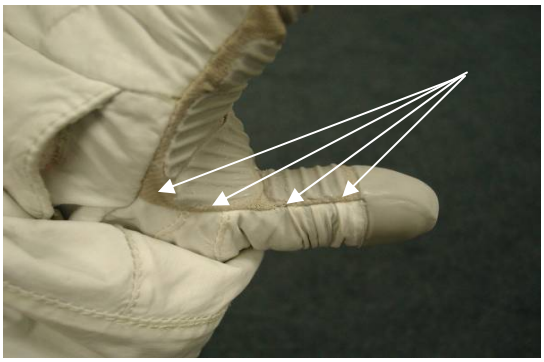

Index Finger (seam facing thumb)

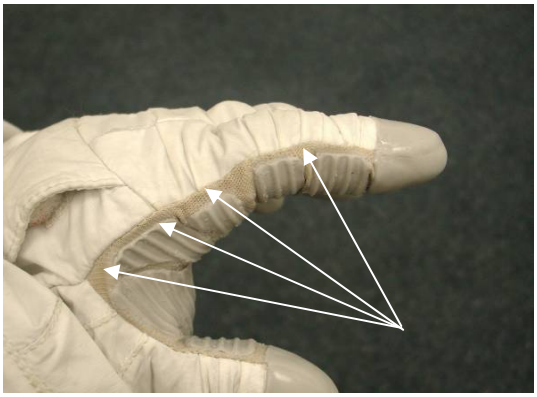

This Page Intentionally Blank

DISPLAY LOSS DURING POWER TRANSFER (WARM RESTART)..... TEMP FS 12-2
VACUUM H2O RECHARGE (MANNED)..... TEMP FS 12-2
LiOH REPLACEMENT (MANNED)..... 12-3
BATTERY REPLACEMENT (MANNED) 12-4
WATER DUMP 12-6
SCU SWAP (UNMANNED)..... 12-7
SCU SWAP (MANNED)..... 12-7
EMU COLD RESTART (MANNED) 12-7
12.1 STS EVA DECONTAMINATION..... 12-8
CONTAMINATION TEST..... 12-15
SAFER BATTERY CHANGEOUT 12-18
BENDS TREATMENT ADAPTER (BTA) INSTALLATION (IN-SUIT) 12-19
BTA PREP 12-19
BTA TREATMENT 12-19
BENDS TREATMENT ADAPTER (BTA) INSTALLATION (POST SUIT DOFFING)..... 12-21
BTA PREP 12-21
BTA TREATMENT 12-21
EMU RESIZE 12-24
STS-122 NOMINAL EMU SIZING MATRIX..... FS 12-27
1E EMU CONTINGENCY RESIZE MATRIX ..... FS 12-29
EMERGENCY UNDOCKING EVA TRANSFERS..... FS CC 12-31

DISPLAY LOSS DURING POWER TRANSFER (WARM RESTART)

DCM If PWR – BATT and SCU connected:
AW18H 1. √PWR/BATT CHGR EMU 1(2) BUS SEL – OFF
DCM If PWR – SCU:
2. PWR – BATT
AW18H 3. PWR/BATT CHGR EMU 1(2) BUS SEL – OFF

> WARNING
> Fan will be off from steps 4 to 9 during which time CO2 buildup is a concern

> NOTE
> Affected EMU will be without comm after step 6. Steps 6 and 7 should be read together before step 6 is performed

DCM 4. FAN – OFF (expect FAN SW OFF msg, DISP – PRO)
IV 5. Inform affected EV crewmember of impending comm loss
DCM 6. PWR – SCU (7 sec)
7. PWR – BATT
When power restart complete:
8. √Display – O2 POS XX, expect FAN SW OFF msg, DISP – PRO
9. As reqd, FAN – ON
If display blank or locked up:
10. Contact MCC
If SCU power desired:
11. √SCU connected to DCM
AW18H 12. PWR/BATT CHGR EMU 1(2) MODE – PWR
BUS SEL – MNA(MNB)
13. √EMU INPUT 1(2) Volts = 18.0 – 20.0
DCM 14. PWR – SCU
DCM 15. √Display – O2 POS XX

VACUUM H2O RECHARGE (MANNED)

> WARNING
> Procedure should be used only if performing a contingency EVA

EV 1. Perform AIRLOCK INGRESS, Cuff C/L, 30 (Close hatch, partially engage latches)
2. √Helmet purge vlv – cl, locked
DCM 3. √PURGE vlv – cl (dn)
4. √WATER – OFF
IV MO13Q 5. √ARLK H2O S/O VLV – OPEN (tb-OP)
MD(flr) 6. √EMU O2 ISOL VLV – OP
ML86B:C 7. √cb MNC EXT ARLK HTR LINE ZN 1,2 (two) – op
AW82B 8. √EV-1(EV-2) O2 vlv – OP
EV AW18H 9. PWR/BATT CHGR EMU 1(2) BUS SEL – MNA(MNB)
DCM 10. PWR – SCU (fwd), WARN TONE
IV R11L If SPLY H2O XOVR VLV closed (tb-CL or bp) (water transfer config):
11. SPLY H2O TKA OUTLET – CL (tb-CL)
If SPLY H2O XOVR VLV open (tb-OP) (nominal config):
L1 12. √RAD CNTLR OUT TEMP – NORM
13. √FLASH EVAP CNTLR PRI A,B (two) – OFF
ML31C 14. SPLY H2O TKD OUTLET – CL (tb-CL)
R11L 15. SPLY H2O TKB OUTLET – CL (tb-CL)
√TKA OUTLET – CL (tb-CL)
TKC INLET – CL (tb-CL)
TKC OUTLET – OP (tb-OP)

STS-122 NOMINAL EMU SIZING MATRIX

Walheim (Wh)

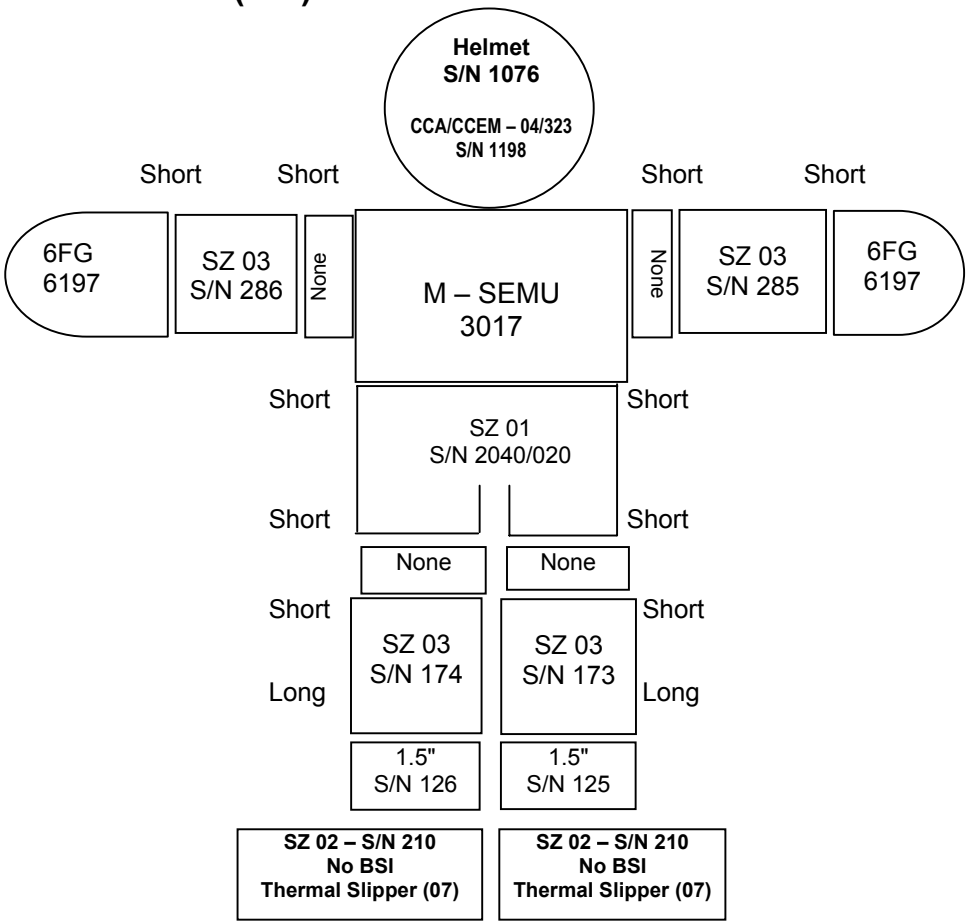

Schlegel (Sg)

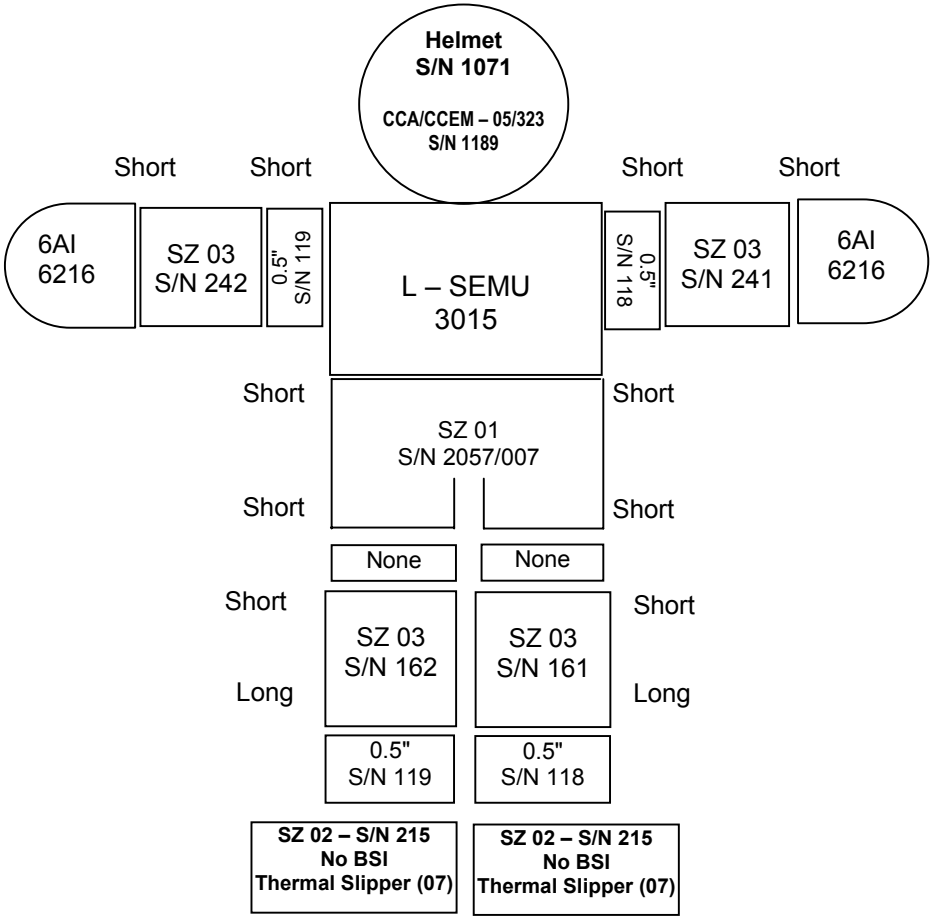

	Croakie	Fresnel Lens	Valsalva	LCVG/BLVD	MAG	TCU Top	TCU Bottom	Comfort Gloves	Socks
Walheim	None	None	Val (1) EMU Servicing Kit	04/05	709 ECOK	M ECOK	M ECOK	Lg, Thin (-06) ECOK	Thermax Liners (L) ECOK
Schlegel	Yes, Modified	2.5 diopter	Val (1) Emu Servicing Kit	03/07	711 ECOK	L ECOK	M ECOK	Lg, Thin (-06) ECOK	Tube & Poly Sock Liners (L) ECOK

STS-122 NOMINAL EMU SIZING MATRIX (Cont)

Love (Lv)

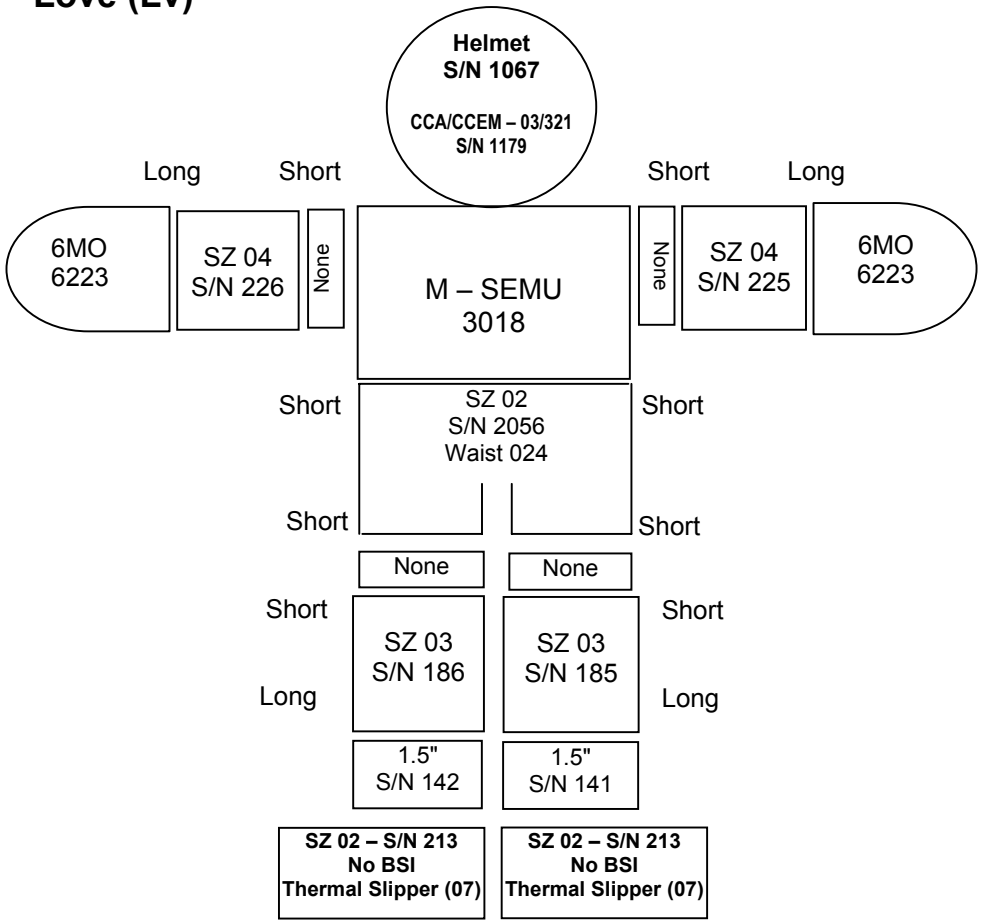

	Croakie	Fresnel Lens	Valsalva	LCVG/BLVD	MAG	TCU Top	TCU Bottom	Comfort Gloves	Socks
Love	No	None	Mod Val (1) EMU Servicing Kit	03/05	709 ECOK	M ECOK	S ECOK	Lg, Thin (-06) ECOK	Poly Liners (XL) ECOK

1E EMU CONTINGENCY RESIZE MATRIX

FOR LOSS OF:	EV1 – Walheim	EV2 – Schlegel	EV3 – Love
HUT/ PLSS	(3017, Medium failed) • Lv use ISS Large • Wh use Lv Medium 1. Perform steps from EV3-Love's column for Loss of HUT/PLSS 2. On Wh failed EMU: • Remove both Wh lower arm/glove assys • Remove Wh LTA • Remove EMU from EDDA • Temp stow all 3. Retrieve Lv Med EMU3018, install: • EMU in EDDA • All Wh components from step 2 (√red arm on right) 4. Connect upper arm heated glove electrical harness 5. Swap helmets to use original assigned	(3015, Large failed) • Use ISS Large 1. On Sg failed EMU: • Remove both Sg ring/lower arm/ glove assys • Remove Sg LTA • Remove EMU from EDDA • Temp stow all 2. Retrieve ISS Large HUT 3006 • Install in EDDA • Remove rings/ arms/gloves assy, LTA, temp stow 3. Install on Large EMU3006: • All SG components from step 1 (√red arm on right) 4. Connect upper arm heated glove electrical harness 5. Swap helmets to use original assigned	(3018, Medium failed) • Use ISS Large 1. On Lv EMU3018: • Remove both Lv lower arm/glove assys • Remove Lv LTA • Remove EMU from EDDA • Temp stow all 2. Retrieve ISS Large EMU 3006 • Install in EDDA • Remove ring/ arms/gloves assy, LTA, temp stow 3. Retrieve O3 lower arms sn 219/220 4. Install on Large EMU3006: • Lower arms sn 219/220 (√red on right) • Lv gloves/LTA 5. Connect upper arm heated glove electrical harness 6. Check/adjust arm cams (8) to long-long position 7. Swap helmets to use original assigned
Waist Brief	(01 S-S) • Use ISS 01 waist brief S/N 2057/007 1. Remove failed Wh waist brief 2. On 2057 verify cams S-S, no thigh ring 3. Install Wh prime legs/rings/boot assys 4. √Cams, √Locks	(01 S-S) • Use ISS 01 waist brief S/N 2057/007 1. Remove failed Sg waist brief 2. On 2057 verify cams S-S, no thigh ring 3. Install Sg prime legs/rings/boot assys 4. √Cams, √Locks	(02 S-S) • Use ISS 02 waist brief S/N 2041/005 1. Remove failed Lv waist brief 2. On 2041 verify cams S-S, no thigh ring 3. Install Lv prime legs/rings/boot assys 4. √Cams, √Locks
Cams	Upper-S / Lower-S	Upper-S / Lower-S	Upper-S / Lower-S
Gloves **Arm Cams**	(6FG, 6197) Use 6FG b/u s/n 6209 (EMU Syst Transf Bag) Upper-S / Lower-S	(6A1,6216) Use 6FG b/u s/n 6214 (EMU Syst Transf Bag) Upper-S / Lower-S	(6MO,6223) Use 6MO b/u s/n 6208 (EMU Syst Transf Bag) Upper-S / Lower-L
LCVG	(04, 07-Therm Slipper) 1. Use backup LCVG (Middeck) 2. Swap biomed, dosimeter	(03, 07-Therm Slipper) 1. Use backup LCVG (Middeck) 2. Swap biomed, dosimeter	(03, 07-Therm Slipper) 1. Use backup LCVG (Middeck) 2. Swap biomed, dosimeter
CCA	(04/323) Use Wh2 (Wh LTA Restraint Bag pouch)	(05/323) Use CCA s/n 1166 (ISS)	(03/321) Use CCA s/n 1178 (ISS)

1E EMU CONTINGENCY RESIZE MATRIX (Cont)

FOR LOSS OF:	EV1 – Walheim		EV2 – Schlegel		EV3 – Love	
Lower Arm Segment **Cams**	(03) 1. Use B/U 03 (s/n 219 or s/n 220) arm (ISS) 2. √Red to Right 3. Connect upper arm heated glove electrical harness 4. √Cams, √Locks		(03) 1. Use B/U 03 (s/n 219 or s/n 220) arm (ISS) 2. √Red to Right 3. Connect upper arm heated glove electrical harness 4. √Cams, √Locks		(04) 1. Use 04 arms (middk s/n 221/222) 2. √Red to Right 3. Connect upper arm heated glove electrical harness 4. √Cams, √Locks	
	Upper-S	Lower-S	Upper-S	Lower-S	Upper-S	Lower-L
Leg Segment **Cams**	(03) 1. Use s/n 161 or 162 (ISS) 2. √Cams, √Locks		(03) 1. Use s/n 161 or 162 (ISS) 2. √Cams, √Locks		(03) 1. Use s/n 161 or 162 (ISS) 2. √Cams, √Locks	
	Upper-S	Lower-L	Upper-S	Lower-L	Upper-S	Lower-L
Boot	(02) Use S/N 215 02 boot, remove BSI (ISS)		(02) Use S/N 215 02 boot, remove BSI (ISS)		(02) Use S/N 215 02 boot, remove BSI (ISS)	
Sizing Rings	(1.5" Leg) Use 1.5" leg ring, s/n 137 or 138 (ISS)		(0.5" arm, 0.5" leg) 1. Use 0.5" arm ring, s/n 120 or 121 (ISS) 2. Use 0.5" leg ring, s/n 118 or 119 (ISS)		(1.5" Leg) Use 1.5" leg ring, s/n 137 or 138 (ISS)	

TOP

HOOK
VELCRO

EMERGENCY UNDOCKING EVA TRANSFERS

Critical

- EMU 3017 (Wh) and 3015 (Sg) (includes LTA/Helmet)
- CCAs (Wh & Sg)
- Gloves (Wh & Sg)
- LCVG (Wh & Sg)
- EMU Batteries (2)
- 85-ft Tethers (2)

Desired

- Leave METOX & REBA
- Leave ERCA (TV) & Helmet Lights with Batteries
- ECOK (Wh & Sg)
- EMU Servicing Kit
- Systems Mesh Bag (Remove Servicing Kit)
- Tethers (6 Adjustable & 2 Ret)

EVA-6a/122/O/A

TOP
BACK OF ‘EMERGENCY UNDOCKING EVA TRANSFERS’

HOOK
VELCRO

EVA-6b/122/O/A

The TPS Repair procedures listed below are not published in the hardcopy EVA Flight Supplement. These procedures will be uplinked realtime if they are required.

A PDF and a WORD version of the procedures can be found at: http://mod.jsc.nasa.gov/do3/FDF/FDFBooks/Status%20Sheets/index.html. Select the "As Flown" Status sheet for STS-122 and the link to the procedures can be found with the link to the EVA FS. The procedures can also be found on the FDF Books CD provided to the FAO console

BOOM TPS INSPECTION
- BOOM POINT INSPECTION SUMMARY TIMELINE ..... FS 13-3
- BOOM POINT INSPECTION TOOL CONFIG ..... FS 13-4
- BOOM POINT INSPECTION ..... FS 13-5
- BOOM WLE MAPPING SUMMARY TIMELINE ..... FS 13-15
- BOOM WLE MAPPING TOOL CONFIG ..... FS 13-17
- BOOM WLE MAPPING ..... FS 13-18
- EVA WLE MAPPING INSPECTION ..... FS 13-24

SAFER TPS INSPECTION
- SAFER TPS INSPECTION SUMMARY TIMELINE ..... FS 13-29
- SAFER TPS INSPECTION TOOL CONFIG ..... FS 13-30
- SAFER TPS INSPECTION ..... FS 13-31

BOOM CONTINGENCY
- BOOM FRGF SHAFT RELEASE ..... FS 13-37
- BOOM FRGF SHAFT INSTALLATION ..... FS 13-38
- BOOM EFGF SHAFT RELEASE ..... FS 13-40
- BOOM MPM STOW/DEPLOY ..... FS 13-42
- BOOM ASSISTED LATCHING ..... FS 13-43

TILE REPAIR
- EMU PREP FOR TPS REPAIR ..... FS 13-44
- POST TPS REPAIR DOFFING ..... FS 13-45
- EWA MATERIAL MIXING ..... FS 13-46
- EWA REF DATA ..... FS 13-47
- EWA TILE REPAIR – DOCKED/ORM SUMMARY TIMELINE ..... FS 13-48
- EWA TILE REPAIR – DOCKED/ORM TOOL CONFIG ..... FS 13-49
- EWA TILE REPAIR – DOCKED/ORM ..... FS 13-50
- SSRMS GAP FILLER REMOVAL SUMMARY TIMELINE ..... FS 13-58
- BOOM GAP FILLER REMOVAL SUMMARY TIMELINE ..... FS 13-59
- GAP FILLER REMOVAL ..... FS 13-60

RCC REPAIR
- RCC CRACK REPAIR BAG ASSEMBLY ..... FS 13-65
- TEMP SENSOR DISASSEMBLY POST-EVA ..... FS 13-68
- RCC CRACK REPAIR BAG DISASSEMBLY POST-EVA ..... FS 13-69
- TEMPERATURE PROBE ASSEMBLY ..... FS 13-71
- CRM APPLICATOR ASSEMBLY ..... FS 13-71
- CRM APPLICATOR NOZZLE INSTALLATION (DAY OF EVA) ..... FS 13-72
- RCC CRACK REPAIR ..... FS 13-73
- RCC PLUG TRANSFER BAG ASSEMBLY ..... FS 13-85

NOTES, CAUTIONS, WARNINGS
- EVA TPS INSPECTION/REPAIR INHIBIT PAD ..... FS 13-97
- TPS REPAIR CAUTIONS AND WARNINGS ..... FS 13-100
- TPS REPAIR NOTES ..... FS 13-101
- BOOM OPERATIONAL WARNINGS ..... FS 13-102
- BOOM OPERATIONAL NOTES ..... FS 13-103

TPS REF DATA
PREFERRED EMU POSITIONING FOR TPS REPAIR ..... FS 13-104
EVA TPS REACH AND ACCESS ..... FS 13-105
POINT INSPECTION REACH AND ACCESS WHILE DOCKED ..... FS 13-106
WLE MAPPING INSPECTION WHILE DOCKED ..... FS 13-108
TILE LAYUP ..... FS 13-109
85-FOOT SAFETY TETHER ..... FS 13-110
PFR ATTACHMENT DEVICE (PAD) ..... FS 13-111
WIF EXTENDER ..... FS 13-112
EVA DIGITAL CAMERA ..... FS 13-113
EVA IR CAMERA ..... FS 13-115
OVERLAY TILE REPAIR SYSTEM (OTRS) ..... FS 13-117
OTRS MARKING TEMPLATE AND INSULATION BAGS ..... FS 13-118
AUGER HOUSING ..... FS 13-119
OTRS RELEASED CONFIGURATION ..... FS 13-120
ORU BAG INSERT FOR OTRS ..... FS 13-121
BOOM REF DATA
RTF BOOM OVERVIEW ..... FS 13-122
BOOM TRANSITIONS WITH MLI ..... FS 13-123
BOOM BASE END AND MODIFIED EFGF ..... FS 13-124
BOOM BASE END EFGF ADAPTER PLATE ..... FS 13-125
EVA-ASSISTED EFGF CONNECTOR DEMATE ..... FS 13-126
BOOM BASE END SADDLE AND MPM ..... FS 13-127
BOOM MID SECTION AND MODIFIED FRGF ..... FS 13-128
BOOM MID SECTION FRGF ADAPTER PLATE ..... FS 13-129
BOOM TIP END AND SENSORS ..... FS 13-130
BOOM SENSOR DETAILS ..... FS 13-132
SENSOR PACKAGE 1 (SP1): LDRI/ITVC ..... FS 13-134
SENSOR PACKAGE 2 (SP2): LCS ..... FS 13-136
POSSIBLE PRD ROUTING FOR EVA ASSISTED LATCHING
OF BOOM IN MPMS ..... FS 13-138
BOOM CONTINGENCIES ..... FS 13-139
GRAPPLE SHAFTS ..... FS 13-140
PDGF GRAPPLE SHAFT COVER ..... FS 13-141
BOOM FRGF FSE ..... FS 13-142

1E WORKAROUNDS CRIBSHEET ..... FS 16-3
P6 PDGF RETRIEVE ..... FS 16-15
NTA INSTALL ON ESP-2 ..... FS 16-21
COL VENT CAP INSTALLATION/REMOVAL ..... FS 16-25

This Page Intentionally Blank

1E WORKAROUNDS CRIBSHEET

Procedure	Failure	Work-Around Steps
I. GENERIC	**TA Clamps**	
	A. TA clamps fail to release	1. With handle up, press down on top of rounded clamp 2. With handle up, use tether hook to pry drawhook from capture pin
	NZGL Connectors	
	A. Bail bar fails to actuate	1. Verify bail linkage intact (or damaged) 2. On MCC GO, attach vise grips to connector bail for more leverage while push/pulling on cap/backshell. Inspect bail and tool for induced sharp edges
	B. Connector fails to demate or release	1. Verify bail fully thrown and undamaged 2. Inspect connector/bail for FOD 3. Check alignment/side loads 4. Wiggle/jiggle connector, pull on connector back shell away from cap/jack for additional leverage 5. Check for harness interference 6. Increase force on bail 7. Attach 2 hooks from adjustable tether to connector bail, use adjustable strap to pull bail into demated position (this works better after bail/linkage has passed over-center feature). Inspect hooks and bail for induced sharp edges
	C. Connector fails to mate	1. Detach from soft dock and inspect: a. Pins b. FOD c. EMI band d. Bend radius e. Bail linkages/rivets f. Soft dock springs g. O-ring seal on non-active side or main joint gasket inside receptacle h. Connector keying features 2. Cycle bail while disconnected, push on connector back shell toward cap/jack for additional leverage 3. Verify half-shells are fully seated on both sides (use rolling motion to seat)

Procedure	Failure	Work-Around Steps
I. GENERIC (Cont)	D. Connector pin bent	1. Rotate connector to bail up position, describe pin location and condition. If possible, obtain WVS view or interface 2. On MCC GO, retrieve pin straightener (A/L staging bag) or needle nose pliers (stbd A/L toolbox, slot 2); attempt pin repair (this is based on pin size and MCC will verify actual pin size prior to retrieving tool)
	E. Connector FOD	1. On MCC GO, obtain connector cleaner tool from A/L staging bag to remove FOD; use entire cartridge prior to re-entry to the airlock NOTE One N2 cartridge is already captured onto the CCT (the other is lanyarded inside caddy). In order to puncture cartridge, it must be threaded into CCT until indicator line passes out of sight under the collar of the CCT 2. Install Connector Cleaner tool gas cylinder only when ready to perform actual cleaning. Attempt cleaning
	F. Connector EMI band bent	1. On MCC GO, obtain needle nose pliers (stbd A/L toolbox, slot 2) or forceps to remove band
	G. Connector bail linkage failure	1. On MCC GO, re-attempt connector mate with broken bail. Vice grips may be used for additional leverage or hand on backshell (hand on back shell is easiest once linkage/bail has passed over-center feature). Pull (to demate) or push (to mate) on connector backshell to assist bail motion. If vice grips used, inspect bail and tool for induced sharp edges
	H. Connector soft dock spring bent	1. On MCC GO, obtain needle nose pliers (stbd A/L toolbox, slot 2); attempt to remove bent spring

Procedure	Failure	Work-Around Steps
I. GENERIC (Cont)	**APFR/IAPFR**	
	A. APFR/IAPFR fails to install into WIF	1. Verify APFR/IAPFR collar in install position 2. Check for FOD in WIF or structural interference 3. Attempt APFR install in alternate clocking and/or WIF position 4. If APFR does not install (APFR failure), use another APFR
	B. Joint fails to actuate	1. Verify no load is applied to joint 2. For pitch joint, push knob in during rotation 3. Increase force applied to free joint
	C. Boot becomes stuck in APFR boot plate	1. Release 7/16-in EVA bolts (3) on heel plate using EVA ratchet or PGT: [B1 (12.0 ft-lb), **CCW2** (30 RPM), MTL **30.5]**, 5 turns
	D. Boot becomes stuck in IAPFR boot plate	1. Release 7/16-in EVA bolts on heel plate (2 per boot) using EVA ratchet or **PGT: [B2** (16.0 ft-lb), **CCW2** (30 RPM), MTL **30.5]**, 4 turns
	Safety Tether	
	A. 85-ft or 55-ft safety tether fails to tend	1. Verify safety tether reel is unlocked 2. Pull out small amount of cable, allow reel to retract while holding cable slightly tensioned 3. Tap side of reel housing during retract 4. Use alternate safety tether
	B. Crew hook fails on load alleviating side or red mark on load alleviating strap showing	1. Use Waist Tether to replace load alleviating strap; retrieve replacement safety tether when time permits
	Torque Multiplier	
	A. Torque multiplier fails to release from fitting	1. Verify torque multiplier anti-backlash in neutral. If not, **PGT[RCW,** MTL **30.5].** Apply cw torque and push anti-backlash button to neutral position 2. **PGT [A5** (7.0 ft-lb), **CCW2** 30 RPM, MTL **30.5] – 5/32 Allen Drive:** Release torque multiplier contingency release band pin 20 turns (do not exceed 28 turns) When contingency band springs open, remove torque multiplier; return torque multiplier IVA
	Scoop	
	A. Scoop will not release from fitting	1. **PGT [A2** (3.8 ft-lb), **CCW2** (30 RPM), MTL **30.5] – 5/32 Ball-end Drive Assy**: Remove screws (non-captive) 5 turns
	MUT EE	
	A. MUT EE Jaws fail to release	1. Verify locking collar fully released 2. Shake MUT EE while depressing paddles (try to alleviate sideloads from handrail) 3. Release MUT EE EECOM socket, tether MUT EE to structure and leave in place

Procedure	Failure	Work-Around Steps
I. GENERIC (Cont)	**MWS End Effector**	
	A. MWS End Effector sticky	1. (Known problem). Report degree of stickiness to MCC and note correlation with thermal environments. Post EVA, report serial number of unit (located on stem of T-bar)
	Ball Stack	
	A. EECOM fails to release from ISS structure	1. Tether Ballstack to local handrail and leave outside
	B. EECOM fails to release from MUT EE	1. Leave together and return inside
	C. Ballstack fails to rigidize	1. Proceed with NTA stow operations. Adjust secondary tethers as able to secure NTA from excess motion
	PAD	
	A. Release knob fails to rotate open	1. Verify knob in release position 2. Attempt to rotate knob using 7/16 in Ratchet on knob's 7/16 in hex stud 3. **PGT [A6 (8.3 ft-lb), CCW2, 30.5]** 7/16-6Ext: Release contingency release bar captive bolts (2); 5 turns
	B. Release knob fails to rotate closed	1. Verify knob in release position 2. Stow PAD, retrieve backup PAD
	TSA	
	A. Latch fails to open	1. **PGT [B7 (25.5 ft-lb), CCW2 (30 RPM), 30.5]** Release either 7/16 in EVA bolt on latch bracket, rotate bracket clear of latch tongue
	B. Latch fails to close	1. Close remaining latches (3 of 4 required for landing)
	Fluid QD – Mating Ops	
	A. QD fails to mate	1. Check for debris, damage, or crystals (if ammonia); verify release ring is retracted 2. Check alignment; verify no side loading present
	B. Release ring snap back test fails	1. Push release ring forward 2. Demate and remate QD
	C. Gap check fails (visual or FID gauge)	1. Retract release ring, demate/remate QD
	Fluid QD – Valve Ops	
	A. Bail fails to actuate (to valve open)	1. Check for debris, damage, or crystals (if ammonia); depress button, attempt to actuate 2. Retrieve and use QD bail drive lever tool
	B. Detent button fails to pop up after bail actuation (to valve open)	1. Neutralize sideloads, apply greater opening force to QD bail handle 2. Contact MCC for use of QD bail drive lever tool to apply greater force

Procedure	Failure	Work-Around Steps
I. GENERIC (Cont)	C. Detent button fails to depress CAUTION Handle may kick back when button is depressed and pressure is built up in spring cavity from a leaking primary seal	1. Verify locking collar fully rotated 2. Push bail handle fwd (to open) to relieve load on button while depressing detent button a. If button depresses, vent by pulling bail aft until release ring covers aft white band b. Push bail fwd to valve open; check button depresses 3. On MCC GO: Retrieve QD bail drive lever tool to push bail fwd a. Repeat step 2 with the QD bail drive lever tool 4. Contact MCC to reduce NH3 temperature at affected QD, if possible 5. On MCC GO: Install QD button depress tool (BDT)
	D. Bail fails to actuate or detent button fails to pop up after actuation (to valve close)	1. Inspect QD for retaining wire protrusion 2. Neutralize possible side loading 3. Depress button, increase force on bail 4. Obtain and use QD bail drive lever tool
	Fluid QD – Demating Ops	
	A. Female QD fails to demate	1. Verify release ring is retracting fully while attempting to demate 2. Verify line clamps are released 3. Verify locking collar has been successfully rotated under detent button (for ½, ¾, 1 in QDs) – verifies button is all the way up 4. For 1.5 in QD, verify trigger linkage is still attached to release ring; if not, re-attach 5. Neutralize sideloads or manipulate flexhose to relieve mating forces on female QD 6. Apply greater retraction force to release ring and/or greater removal force to female QD while neutralizing sideloads 7. Contact MCC for use of QD Release Tool (QRT) to apply greater force
	B. Bootie fails to remain securely closed	1. Install wire tie around bootie to keep QD fully covered
	FRAM OPERATIONS	
	A. Active FRAM fails to seat on passive FRAM	1. Check for FOD in mechanism 2. Check alignment (engage 2 forward shear pins first to ensure connector door is not jamming)
	B. Primary FRAM bolt fails to release	1. Confirm socket fully engaged (releases locking tabs); reattempt 2. Increase PGT setting for initial break torque: [**B2** (16 ft-lb), CCW2, 30.5], reattempt for 1 turn, then return to original torque setting 3. Increase PGT [**B4** (19.4 ft-lb) CCW2, 30.5], reattempt for 1 turn, then return to original torque setting

Procedure	Failure	Work-Around Steps
I. GENERIC (Cont)	C. Primary FRAM bolt fails to engage Fwd Cont Pins: Turns = 14.11 – (1.25 x Primary bolt turns achieved) Aft Cont Pins: Small Adapter Plate/CEPA: If Primary Drive < 6.5 turns: Turns = ~3.0 If Primary Drive > 6.5 turns: Aft pins not required, and cannot be installed (Turns = 0)	1. Confirm FRAM seated and socket fully engaged (releases locking tabs), reattempt 2. If no turns achieved initially: Increase PGT to **B2** (16 ft-lb) for 1 turn, then continue at original PGT setting 3. Release and reseat FRAM: a. Back out primary FRAM bolt fully **A7** for Solar and EuTEF, **A4** for NTA/CMG) b. Lift FRAM and check for FOD c. Reseat and reattempt engagement at original PGT setting (**A7** for Solar and EuTEF, **A4** for NTA/CMG) 4. Increase PGT setting: [**B2** (16 ft-lb), CW2, 30.5], reattempt for 1 turn, then continue at original PGT setting 5. Increase PGT setting: **[B4** (19.4 ft-lb), CW2, 30.5], reattempt for 1 turn, then continue at original PGT setting 6. On MCC GO: Engage contingency locking pins: Fwd pins: PGT [**A4** (6.3 ft-lb), CW2, 30.5] 6-Ext 7/16; push socket to release locking tabs, see chart to left for # turns. NOTE: **B2** (16 ft-lb) can be used for first turn if necessary Aft pins (see box to left): a. Remove bolt from STOW location: PGT **[B1 (12 ft-lb), CCW 2, 30.5]** 6-ext 7/16 b. Insert bolt into INSTALL location and manually engage as many turns as possible (~1.5 turns) c. **PGT [B1** (12.0 ft-lb)**, CW 2, 30.5]** 6-Ext 7/16; engage locking pin (~1.5 turns) OR PGT **[A7 (9.2 ft-lb), CW2, 30.5]** **RAD** with 2-Ext 7/16, ~2 turns NOTE: 4 of 4 contingency pins required for PLB and EPF, 3 of 4 required for ESP-2
II. COLUMBUS LTA CABLE DISCONNECT		
	A. Connector fails to demate	1. See NZGL Connectors (GENERIC TASKS) 2. Check MCC-H for cable cut options (this will leave hot cables in PLB once APCU 2 power is reenabled for OBSS, and on Col when HCUs are powered via SSRMS or ISS)

Procedure	Failure	Work-Around Steps
II. COLUMBUS LTA CABLE DISCONNECT (Cont)	B. Connector fails to softdock on ECSH	1. Use wire tie to secure connector/cable (NOTE: connector will be hot once APCU 2 power is re-enabled)
	C. Connector cap fails to install on COL	1. Return cap IVA. NOTE: Connector J01 will have exposed and energized pins when HCUs are powered. Check MCC-H for further restrictions
III. MDPS PANEL REMOVE/ INSTALL		
	A. MDPS panel bolt fails to release	1. Increase PGT setting: [**B7 (25.5 ft-lb)**], reattempt 2. Use PGT in manual RCCW, 30.5 MTL to break torque 3. If no turns achieved: a. Release other MDPS shield fasteners, then reattempt suspect bolt [use **B7** setting] If bolt jammed while partially released: b. Reinstall all remaining panel bolts. Proceed to step 3 or 4 below (NOTE: Panel good for on-orbit loads with any 3 of 4 bolts engaged) 4. If unable to remove upper panel, install PDGF (with 3 of 4 EDFs) with panel in place a. Tether to 9 o'clock EDF b. Cut restraining EDF lanyards, remove and stow EDF in trash bag c. Install PDGF with remaining 3 EDFs per standard procedure (use 7/16" box end wrench for 3 o'clock bolt) 5. If unable to remove lower panel: P400,P401 cables will not be installed. (Power will be applied to COL heaters after mating to Node 2)
	B. MDPS panel bolt fails to engage	1. Verify panel seated fully onto all 4 bolt receptacles (bolt 1 most restricting) 2. Partially release other fasteners, attempt engagement of problem fastener with other fasteners untorqued 3. If time allows: Remove shield, verify no interference under shield 4. Engage other fasteners: any 3 of 4 bolts required for on-orbit loads (no EVA ops allowed on shield handrail with less than 4 bolts engaged)
	C. T-handle tool fails to engage shield	1. Check for FOD/damage on shield and tool 2. Check button can depress (i.e., tool not jammed)
	D. T-handle tool fails to disengage shield	1. Ensure button is depressed, wiggle/jiggle tool to release 2. Tether tool in place with adj tether

Procedure	Failure	Work-Around Steps
IV. PDGF REMOVAL FROM SIDEWALL		
	A. Horseshoe connector drive bolt will not release	1. Increase PGT setting **[B1 (12 ft-lb), CCW2, 30.5]** 2. Press on (P400,P401 will not be installed)
	B. Both EDF retaining lanyards missing/not intact	1. Tether to EDF prior to releasing fastener 2. After release, fully remove EDF and stow EDF in trash bag (reinstall when at Columbus)
	C. Torque cannot be broken on EDF	1. Use PGT in manual ratchet mode (RCCW, 30.5 MTL) 2. Retrieve 7/16" box end wrench from PDGF bag 3. Retrieve cheater bar from toolbox
	D. Once 5 turns achieved, EDF will not release from PDGF	1. Use tool to lightly tap bolt head and repeat attempt to release 2. Retrieve hammer from TSA fwd tray; lightly tap bolt head and repeat attempt to release 3. On MCC GO, reinstall EDFs and retrieve P6 PDGF
	E. PDGF cannot be removed from sidewall carrier mounting ring softdock	1. Ensure all 4 EDFs are released and retracted, twist PDGF while pulling to work it off (avoid curvic coupling) 2. On MCC GO: Retrieve prybar from ISS A/L (staging bag) 3. On MCC GO: Reinstall EDFs and retrieve P6 PDGF
V. PDGF INSTALLATION		
	A. PDGF fails to softdock to mounting ring	1. Verify all 4 EDFs fully retracted 2. Verify PDGF orientation (target pin at 10 o'clock) 3. If protruding EDF suspect: a. Tether to EDF b. Cut restraining lanyards c. Remove EDF; stow in trash bag 4. On MCC GO: Return PDGF to sidewall carrier and retrieve P6 PDGF
	B. EDF will not insert (greater than 1/4 in gap between washers, but appears to be through all clevis/lug holes)	1. Verify EDF fully seated on internal hex head and aligned by pushing in and rotating the EDF (may require up to 30 deg of rotation to align hex) 2. Hand tighten EDF until no threads visible 3. If no joy, press with 3 of 4 EDFs installed
	C. Unable to torque EDFs to final torque	1. Verify EDF fully seated per workaround steps for failure B above 2. If no joy, press with 3 of 4 EDFs installed
	D. PDGF harness P400, P401 fails to mate	1. For P400, P401 connectors, see NZGL Connectors (GENERIC TASKS) 2. If no joy, press without power to affected heater string a. Secure harness in TA clamps b. Replace cap on J400 (J401)

1E WORKAROUNDS CRIBSHEET (Cont)

Procedure	Failure	Work-Around Steps
V. PDGF INSTALLATION (Cont)	E. Horseshoe connector will not slide onto receptacle	1. Verify yellow band visible on back side of bolt. If not, release bolt as reqd until yellow band visible
	F. Horseshoe connector microfixture will not rotate	1. Attempt to off-load microfixture 2. Remove, check for FOD, cycle microfixture 3. Attempt to drive connector bolts without soft-dock engaged (verify bracket remains fully seated during bolt drive)
	G. PDGF Horseshoe connector (P5/P6, P7/P8) bolts fail to engage	1. Release connector, check for FOD or damage 2. Increase PGT setting **[B1 (12 ft-lb), CCW2, 30.5]** 3. Remove cable and return IVA. Proceed without power to affected heater string
VI. CBM SEAL COVER REMOVAL		
	A. FOD found on CBM	1. Clean FOD from CBM seals (use TPS scraper from Airlock if necessary)
VII. P1 NTA REMOVAL PREP		
	A. NTA bolt fails to break torque with TM	1. Use PGT in manual ratchet [RCCW, 30.5] and break torque through TM 2. Break torgue on other bolts and reattempt suspect bolt 3. Ratchet wrench with cheater bar: Break torque on fastener. DO NOT use cheater bar with TM
VIII. OTSD STOW		
	A. Secondary WIF Lock fails to move into locked position	1. Check for side loads on WIF interface 2. Install secondary tether on OTSD (to structure) or return OTSD to Airlock
IX. NTA REMOVAL FROM PAYLOAD BAY		
	A. NTA Bolt fails to release	1. Use PGT in manual ratchet [RCCW, 30.5] TM; break torque manually 2. If no turns achieved: a. Release other NTA bolts, then reattempt suspect bolt [use B7 setting] If bolt jammed while partially released: b. See NTA BOLT JAM failure
	B. NTA Bolt jams	1. Use PGT in manual ratchet [RCCW, 30.5]; reattempt 2. Reinstall bolts (Do not perform R&R) 3. If not able to achieve 4 of 4 bolts, release NTA FRAM, stow NTA/FRAM IA on ESP-2, site 2

1E WORKAROUNDS CRIBSHEET (Cont)

Procedure	Failure	Work-Around Steps
IX. NTA REMOVAL FROM PAYLOAD BAY (Cont)	C. NTA MLI 1/4 fastener fails to release	1. Use equipment hook for addl leverage 2. Assess if NTA can be removed with MLI fastener still engaged 3. Retrieve Needle nose pliers for better leverage 4. Cut MLI with EMU Scissors
X. NTA REMOVAL FROM P1		
	A. NTA Bolt fails to release	1. Use PGT in manual ratchet [RCCW, 30.5]
	B. NTA Bolt jams	1. Use PGT in manual ratchet [RCCW, 30.5] 2. Do not perform R&R a. Reinstall bolts If not able to achieve 4 of 4 bolts: b. Tether old NTA to truss c. Return new NTA to PLB d. Check MCC for further stow plans
	C. Soft dock pin fails to retract	1. Retrieve scoop and attempt rotation
	D. NTA fails to remove from rail	1. Inspect for MLI interference with rails 2. Check MCC-H
XI. NTA INSTALL IN P1		
	A. NTA fails to install on rails	1. Inspect for MLI interference with rails
	B. NTA soft dock pin fails to engage	1. Press on
	C. NTA bolt fails to engage	1. Use PGT in manual ratchet [RCW, 30.5] 2. If less than 4 of 4 bolts achieved: tether NTA with Adj tether
XII. NTA INSTALL IN PAYLOAD BAY		
	A. NTA fails to install on rails	1. Inspect for MLI interference with rail
	B. NTA bolt fails to engage	1. Use PGT in manual ratchet [RCW, 30.5] 2. If not able to achieve 4 of 4 bolts, release NTA FRAM, stow NTA/FRAM IA ESP-2 Site 2
XIII. COLUMBUS TRUNNION COVER INSTALL		
	A. Trunnion cover grounding fastener will not install	1. If 1 of 2 fasteners installed successfully, no action – press with next task 2. If both fasteners will not install, contact MCC
XIV. SOLAR TRANSFER		
	A. Solar locking pin inadvertantly released	1. Route adjustable from FRAM handrail to Solar support beams to restraint SOLAR motion during transfer (remove once installed on EPF)
	B. Unable to release Primary FRAM bolt on ICC Lite	1. See FRAM OPERATIONS (I. GENERIC TASKS), failure B steps

Procedure	Failure	Work-Around Steps
XIV. SOLAR TRANSFER (Cont)	C. Unable to engage PRIMARY FRAM bolt on EPF	1. See FRAM OPERATIONS (I. GENERIC TASKS), failure C steps 1-5 2. If electrical connectors not mated (fully mated at 11.2 turns), check MCC-H to assess if failure is related to active or passive FRAM If active FRAM suspect or jammed at intermediate state: a. Secure contingency pins (FRAM OPERATIONS failure C step 6) If passive FRAM suspect: b. Release FRAM and install in nadir starboard EPF Site (SDX – site 3); verify inhibits
XV. CMG TRANSFER		
	A. CMG Shim bolt fails to Drive or make contact with CMG	1. Check FOD 2. Increase PGTsetting to A5 (7.0 ft-lb); reattempt 3. Use PGT in manual ratchet (RCW, 30.5) and manually advance shim in small increments until contact is visibly confirmed. DO NOT PRELOAD SHIM AGAINST CMG 4. Check MCC-H (4 of 4 shims reqd for return)
	B. Unable to release Primary FRAM bolt on ESP-2	1. See FRAM OPERATIONS (I. GENERIC TASKS), failure B
	C. Unable to engage Primary FRAM bolt on ICC	1. See FRAM OPERATIONS (I. GENERIC TASKS), failure C
XVI. EuTEF TRANSFER		
	A. Unable to release Primary FRAM bolt on ICC Lite	1. See FRAM OPERATIONS (I. GENERIC TASKS), failure B steps
	B. Unable to engage Primary FRAM bolt on EPF	1. See FRAM OPERATIONS (I. GENERIC TASKS), failure C steps 1-5 2. If electrical connectors not mated (fully mated at 11.2 turns), check MCC-H to assess if failure is related to active or passive FRAM If active FRAM suspect or jammed at intermediate state: a. Secure contingency pins (FRAM OPERATIONS failure C step 6) If passive FRAM suspect: b. Release FRAM and install in nadir starboard EPF Site (SDX – site 3); verify inhibits

1E WORKAROUNDS CRIBSHEET (Cont)

Procedure	Failure	Work-Around Steps
XVII. ON-ORBIT INSTALLED HANDRAIL		
	A. Handrail will not install in seat track	1. Verify handrail shoe is completely released 2. **PGT [A2** (3.8 ft-lb), **CCW2 30RPM]** 6Ext-7/16: Verify handrail bolt completely released 3. Rotate handrail 180 deg and reattempt
	B. Handrail fails to soft dock	1. Verify soft dock armed 2. Check for FOD 3. Rotate handrail 180 deg
	C. Fasteners will not engage completely	1. Remove handrail, check for FOD, attempt to re-install, verify alignment of bolt 2. Increase torque to **PGT [A5** (7.0 ft-lb), **CW2, 30.5]** to break torque (1-2 turns), then resume at **PGT A2** (3.8 ft-lb) setting 3. Return handrail to ground 4. If handrail cannot be released from soft dock and both bolts are not engaged: tether HR to nearby structure. (WVS survey)
XVIII. ON-ORBIT INSTALLED WIF		
	A. WIF fails to soft dock	1. Check for FOD and structural interference, cycle soft dock pins; attempt reinstallation 2. Install alternate WIF (if available) 3. Attempt installation in alternate location 4. Return WIF to ground
XIX. SSPTS CABLE INSTALL		
	A. Connector issues	1. See NZGL Connectors (GENERIC TASKS)
XX. CETA CART		
	A. Parking brake fails to engage/disengage	1. Retry using other side 2. Contact MCC
	B. Swing arm fails to rotate	1. Do not force swing arm into position; use alternate swing arm/WIF 2. If necessary per MCC, remove swing arm: **PGT [B7 (25.5), CCW2, 30.5]** 6Ext-7/16
	C. Swing arm fails to lock	1. Wire tie in stowed position

P6 PDGF RETRIEVE (01:30)

IV/SSRMS	EV1	EV2
Initial config: EV2: At PLB PDGF sidewall carrier on SSRMS EV1: Performing MDPS panel removal On MCC GO to perform P6 PDGF retrieve: 1. Inform EV crew: Begin P6 PDGF retrieve 2. MCC-H position port SARJ to 240 deg and configure DLAs for EVA Ops out board of SARJ (<u>NOTE</u>: SARJ 240 deg places P6 PDGF on ISS fwd to ensure adequate tether length)	On MCC GO to retrieve P6 PDGF: 1. Secure COL panels to COL structure (release any rets to MWS) 2. Retrieve 7/16" box end wrench from PDGF bag, secure to BRT 3. Translate to Node 2 safety tether swap location (HR 0332) • Retrieve PLB fairlead 4. Perform safety tether swap to airlock tether • Verify load strap hook slide lock – L • √Safety tether reel unlocked 5. Retrieve Node 2 safety tether (needed as spare) 6. Translate to ESP-2; release fairlead 7. Translate to aft side of lab; translate nadir to port side of lab and up to truss via port strut. Do not fairlead 8. Translate to CETA cart 1	On MCC GO to retrieve P6 PDGF: 1. If reqd, secure PDGF to sidewall carrier with initial torque: <u>NOTE</u> EDFs must be driven in a cross pattern (order not critcal) **PGT [A7 (9.2 ft-lb), CW2, 30.5] 6-Ext 7/16** Verify turn count of zero; drive EDF bolts (4), 5 turns to torque ❑ Fwd, lower EDF bolt ❑ Aft, upper EDF bolt ❑ Fwd, upper EDF bolt ❑ Aft, lower EDF bolt 2. Final torque of EDF bolts: **PGT [B7 (25.5 ft-lb), CW2, 30.5] 6-Ext 7/16** Verify turn count of zero; drive EDF bolts (4) to torque, then repeat cross pattern and verify less than 1/4 additional turn on each EDF ❑ Fwd, lower EDF bolt ❑ Aft, upper EDF bolt ❑ Fwd, upper EDF bolt ❑ Aft, lower EDF bolt 3. If reqd, re-engage horseshoe connector bolts **PGT [A7 (9.2 ft-lb), CW2, 30.5] 6-Ext 7/16th** 2 bolts, 15-17 turns ❑ Horseshoe receptacle P6/P8 ❑ Horseshoe receptacle P7/P5 4. Release RET from PDGF 5. GCA SSRMS for APFR egress 6. Egress SSRMS 7. Perform safety tether swap onto Node 2 safety tether

P6 PDGF RETRIEVE (01:30) (Cont)

IV/SSRMS	EV1	EV2
		• Verify load strap hook slide lock – L • √Safety tether reel unlocked 8. Leave SSRMS 55-ft safety tether attached to APFR 9. Translate to Node 2 safety tether swap location (HR 0305) • Retrieve PLB fairlead 10. Perform safety tether swap to airlock tether • Verify load strap hook slide lock – L • √Safety tether reel unlocked 11. Retrieve Node 2 safety tether (needed as spare) 12. Translate aft along port side of Node 2 and Lab 13. Translate to truss via lab port strut; do not fairlead 14. Translate to CETA cart 2 15. Retrieve APFR from WIF 5 (port, middle); stow on BRT 16. Perform safety tether swap onto spare 85-ft tether at furthest extent of airlock tether (near MT, stbd side) • Verify load strap hook slide lock – L • √Safety tether reel unlocked • √Anchor hook locked 17. Stow airlock safety tether on P3 HR TBD 18. Translate to inboard of SARJ joint 19. On IV GO: translate across SARJ and continue port to P6
NOTE APFR in CETA cart 1, WIF 4 being used by STS-123 1JA 3. IV: Verify w/MCC-H port SARJ DLAs configured for EVA ops out board of SARJ	9. Assist EV2 with APFR retrieve and positioning 10. Perform safety tether swap onto spare 85-ft tether at furthest extent of airlock tether (near MT, stbd side) • Verify load strap hook slide lock – L • √Safety tether reel unlocked • √Anchor hook locked 11. Stow airlock safety tether on P3 HR TBD 12. Translate to inboard of SARJ joint 13. On IV GO: translate across SARJ and continue port to P6	

WARNING
Avoid inadvertent contact with SSU, ECU, beta gimbal platform, mast canister, and SAW blanket boxes unless the beta gimbal is locked and the motor is turned off

Avoid contact with grapple fixture shaft and target pin

P6 PDGF RETRIEVE (01:30) (Cont)

IV/SSRMS	EV1	EV2
	14. Assist EV2 w/translation past PDGF and APFR install	20. Translate to P6 WIF 4B 21. Install APFR; clocking = **4** • Verify locking collar blk-on-blk • Perform pull test 22. Configure APFR **[4, NN, F, 12]** 23. Ingress APFR
	NOTE Verify EDF has at least 1 lanyard intact before release. Avoid turning EDF more than 5 turns. RAD or box end wrench may be required to access 1 or more EDFs. MCC will will provide PGT setting, if necessary	
	15. Attach waist tether to PDGF tether point 16. **PGT [B7 (25.5 ft-lb), CCW2, 30.5] 6-Ext 7/16** Release EDF bolts (2), 4-6 turns ❑ STBD, fwd EDF bolt ❑ STBD, aft EDF bolt 17. Ensure all EDFs fully retracted 18. Assist EV2 19. Receive PDGF from EV2	24. **PGT [B7 (25.5 ft-lb), CCW2, 30.5] 6-Ext 7/16** Release EDF bolts (2), 4-6 turns ❑ Port, fwd EDF bolt ❑ Port, aft EDF bolt 25. Ensure all EDFs fully retracted 26. Remove PDGF from mounting ring 27. Hand off PDGF to EV1 28. Egress APFR
4. When EV crew inboard of P1 SARJ, give MCC-H GO for P1 SARJ autotrack	20. Prepare to translate with PDGF, keeping the target pin and grapple shaft pointed away from structure 21. Coordinate translation w/EV2 by alternately holding PDGF and moving along structure 22. At P3 HR TBD, perform safety tether swap onto airlock safety tether • Verify load strap hook slide lock – L • √Safety tether reel unlocked 23. Retrieve spare safety tether 24. Translate down Lab port strut and along port side to EV2's tether swap location (Node 2 HR 0305) 25. Secure PDGF to handrail; release waist tether	29. Attach waist tether to PDGF tether point 30. Prepare to translate with PDGF, keeping the target pin and grapple shaft pointed away from structure 31. Assist EV1 with PDGF translation 32. At P3 HR TBD, perform safety tether swap onto airlock tether • Verify load strap hook slide lock – L • √Safety tether reel unlocked 33. Retrieve spare safety tether 34. Assist EV1 with PDGF translation

P6 PDGF RETRIEVE (01:30) (Cont)

IV/SSRMS	EV1	EV2
	26. Translate aft to Node 2 HR 0332 for safety tether swap 27. Perform safety tether swap onto Node 2 tether • Verify load strap hook slide lock – L • √Safety tether reel unlocked • √Anchor hook locked 28. Translate to Node 2 fwd along STBD side; translate to EV2's tether swap location 29. Attach waist tether to PDGF 30. Coordinate translation to PLB ICC port • PLB fairlead? 31. Stabilize self w/BRT to ICC HR 32. Receive PDGF from EV2	35. Perform safety tether swap onto Node 2 tether • Verify load strap hook slide lock – L • √Safety tether reel unlocked • √Anchor hook locked 36. Hold for EV1 37. Assist EV1 w/translation to PLB ICC port • PLB fairlead? 38. Hand off PDGF to EV1 39. Release waist tether attached to PDGF 40. Perform safety tether swap onto SSRMS tether • Verify load strap hook slide lock – L • √Safety tether reel unlocked • √Anchor hook locked 41. Ingress APFR 42. RET to and receive PDGF from EV1 43. Give SSRMS GO for mnvr to COL
5. When complete, return to nominal EVA 1 Timeline with the following addition: Release horseshoe connector bolts once PDGF EDF bolts are engaged on Columbus: A. Open horseshoe connector MLI • Lift cover flap and pull back chin strap • Release Velcro; pull cover to side **B. PGT [B1 (10 ft-lb), CCW2, 30.5] 6-Ext 7/16** Release horseshoe connector bolts (2), 20-26 turns to free spin, yellow band visible ❑ Horseshoe receptacle P6/P8 ❑ Horseshoe receptacle P7/P5	33. Hand off PDGF to EV2 34. Release waist tether from PDGF; verify clear 35. Translate to COL; complete upper MDPS panel remove	

P6 PDGF RETRIEVE – TASK DATA SHEET

Estimated Task Duration:

	With SSRMS	Without SSRMS
One EV Crew	N/A	N/A
Two EV Crew	N/A	01:30

Tools:

EV1	EV2
• PGT 6-Ext 7/16 • RET • BRT • Waist tether • 2 – 85-ft safety tethers • RAD w/2-in ext or 7/16" box end wrench	• PGT 6-Ext 7/16 • RET • Waist tether • 2 – 85-ft safety tethers

EVA Fasteners:

Fastener Name	Head Size	Qty	Install Torque (ft-lb)	Release Torque (ft-lb)	Failure Torque (ft-lb)	Turns
PDGF EDF	7/16	4	10 (init) 25.8 (fin)	25.8	143.3	4-6
PDGF horse shoe connector	7/16	2	7.5-10	10	10.8	20-26

Foot Restraints:

Task	WIF	Setting
P6 PDGF retrieve (prime)	P6 WIF 4B	4, NN, F, 12
P6 PDGF retrieve (loads issue – do not use w/o MER approval)	P6 WIF 12	3, PP, E, 10

ORU Identification:

ORU	Part number	Serial Number
Col PDGF	51618-1000-1	TBD

ORU mass: 72 lbs

Notes:

1. Verify EDF has at least 1 lanyard intact before release
2. Avoid turning EDF more than 5 turns during release. The EVA nut can be released from the EDF core causing it to free spin

Cautions:

1. None

Warnings:

1. Avoid contact with grapple fixture shaft and target pin
2. Avoid inadvertent contact with SSU, ECU, beta gimbal platform, mast canister, and SAW blanket boxes unless the beta gimbal is locked and the motor is turned off
3. Verify port SARJ DLA configuration prior to translating outboard of SARJ

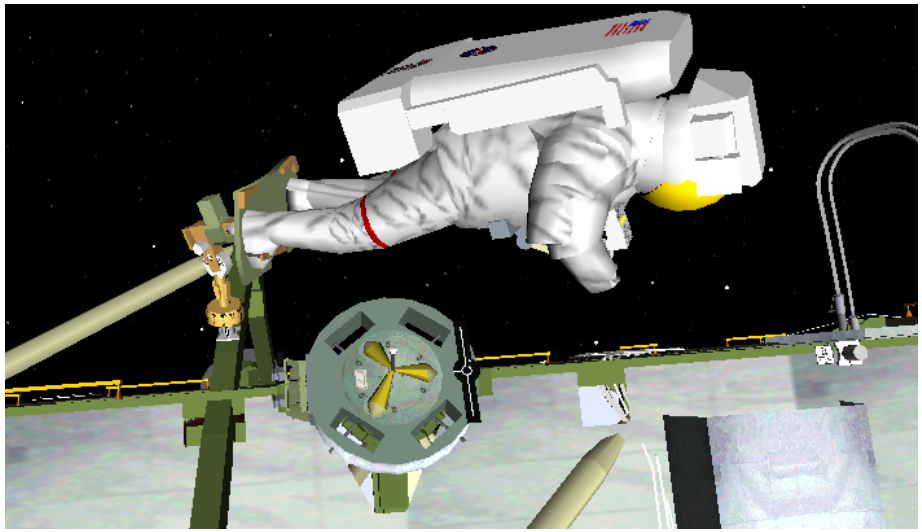

P6 WIF 4B [4, NN, F, 12]

P6 PDGF RETRIEVE – TASK DATA SHEET (Cont)

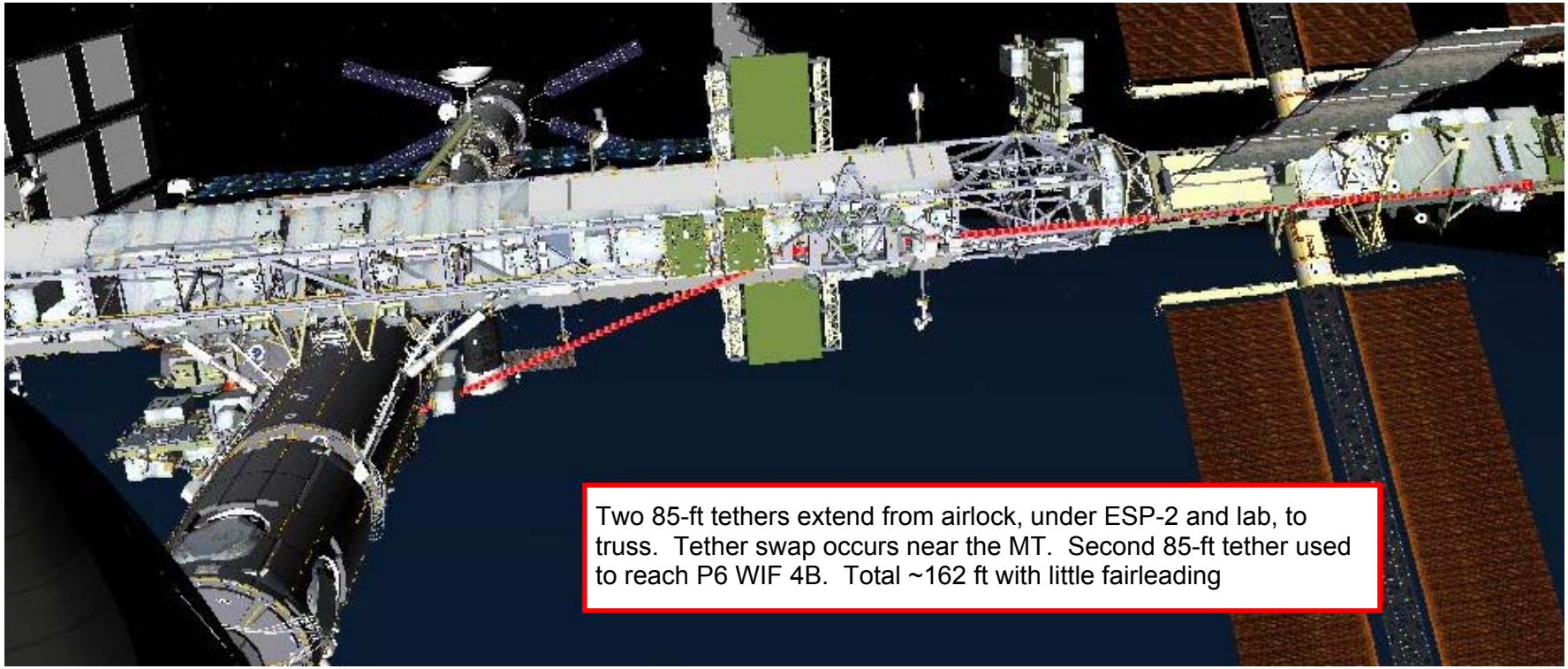

NTA INSTALL ON ESP-2 (00:55)

IV/SSRMS	EV1	EV2
Initial condition: 1. Verify ICC heaters powered off: R1 √PL AFT MN B – OFF	**<u>Assumptions/Initial Conditions</u>**: ❑ On attempting to stow the old NTA in its ICC FSE, one or more NTA bolts jammed leaving the NTA in an unacceptable condition for Orbiter entry ❑ All remaining NTA bolts are engaged, EV1 has removed the 7.8-ext 5/8 socket from his PGT, and stowed his PGT ❑ The NTA with its FRAM must be removed from the payload bay and stowed on ESP2 site 2 (zenith, fwd, middle site) ❑ It has been determined to be acceptable for loads for an EV crewmember to maneuver the NTA/FRAM on the SSRMS w/3 of 4 NTA bolts secured	
	<u>NTA/FRAM REMOVAL</u> (00:40)	<u>NTA/FRAM REMOVAL</u> (00:40)
	1. Release RET from NTA 2. GCA SSRMS for egress 3. Egress SSRMS 4. Remove waist tether 5. Translate to ICC fwd, port 6. Release adjustable tethers securing MLI; temp stow on MWS 7. Pull MLI tent over NTA 8. Close flap B on fwd, stbd corner 9. Secure quarter turn fasteners 10. Reattach waist tether to APFR boot plate 11. Ingress APFR 12. GCA SSRMS for NTA/FRAM removal 13. Ret to NTA/FRAM; restrain NTA 14. Give EV2 GO for FRAM bolt release 15. Lower NTA/FRAM away from PFRAM 16. GCA SSRMS to move NTA fwd in PLB 17. Re-orient NTA/FRAM; hold ORU by FRAM slanted HRs 18. Give SSRMS GO for mnvr to ESP-2 (00:25)	1. Retrieve 7/16th 6-ext socket from NTA bag; install on PGT 2. Assist EV1 w/MLI tent install 3. Position self for FRAM bolt release (STBD side) 4. On EV1 GO: **PGT [A4 (6.3 ft-lb), CCW 2, 30.5], 6-ext 7/16;** verify 0 turn count Release primary FRAM bolt ~11 turns to hard stop (push ~10 lb to release locking tabs) 5. Stow PGT 6. Assist EV1 7. Retrieve EV1's Node 2 safety tether from port sill

NTA INSTALL ON ESP-2 (00:55) (Cont)

IV/SSRMS	EV1	EV2
2. Power on ICC heaters: R1 PL AFT MNB – ON		8. Translate to NTA bag 9. Perform NTA Bag inventory: scoop, TM, wire tie caddies (2), camera 10. Retrieve NTA Bag; stow on BRT 11. Release own PLB fairlead 12. Release EV1's PLB fairlead 13. Translate to Lab HR 0208 (aft endcone) along Port route, keeping own safety tether line free from EV1 Node 2 tether line
3. IV: Verify with MCC-H, ESP-2 FRAM inhibits in place for NTA Install RPCM N1RS2_B RPC 7 – OPEN, CL cmd INH RPCM S04B_F RPC 11 – OPEN, CL cmd INH		14. Attach EV1 Node 2 safety tether to HR 0208 15. Backtrack as necessary to free own tether line 16. Translate on STBD side to ESP-2 17. Fairlead safety tether at or above ESP-2 level as required
	<u>NTA INSTALL</u> (00:15)	<u>NTA INSTALL</u> (00:15)
		18. Position self for NTA install 19. Config PGT **[A4 (6.3 ft-lb), CW 2, 30.5], 6-ext 7/16**
	19. GCA SSRMS for NTA install 20. Position NTA over PFRAM using FRAM alignment stripes; soft dock NTA	20. Have PGT ready for handoff to EV1 21. Assist EV1
4. Record NTA FRAM torque and turns _____ ft-lb _____ turns	21. Restrain NTA; prepare to receive PGT from EV2 22. Receive PGT 23. On IV GO: Verify **PGT [A4 (6.3 ft-lb), CW2, 30.5], 6-ext 7/16;** verify 0 turn count Engage primary FRAM bolt ~11 turns to hard stop (push ~10 lb to release locking tabs)	22. Restrain NTA 23. Handoff PGT w/7/16th socket to EV1
	24. Perform pull test on FRAM 25. Transfer PGT back to EV2 26. Retrieve RET from NTA 27. Provide WVS survey of NTA	24. Receive PGT; stow
	28. GCA SSRMS for egress 29. Egress APFR; release waist tether 30. Translate to lab HR 0208 (port aft endcone) keeping safety tether line below ESP-2 level 31. Perform safety tether swap onto Node 2 safety tether	25. Translate to airlock; stow NTA bag

NTA INSTALL ON ESP-2 (00:55) (Cont)

IV/SSRMS	EV1	EV2
	• Verify load strap hook slide lock – L • √Safety tether reel unlocked 32. Translate with SSRMS tether to SSRMS 33. Secure SSRMS safety tether load strap to APFR HR 34. GCA SSRMS for APFR config; reconfig to low profile **[6, TT, F, 6]** 35. Verify SSRMS clear 36. Give IV GO to back away SSRMS 37. Translate to airlock 38. Go to ingress procedure	26. Go to ingress procedure

NTA INSTALL ON ESP-2 – TASK DATA SHEET

Estimated Task Duration:

	With SSRMS	Without SSRMS
Two EV Crew	00:55	N/A

Tools:

EV1	EV2
• RET •	• BRT • PGT 6-ext 7/16

Foot Restraints:

Task	WIF	Setting
NTA Stow	SSRMS	12,PP,F,6

EVA Fasteners:

Fastener Name	Head Size	Qty	Install Torque (ft-lb)	Release Torque (ft-lb)	Failure Torque (ft-lb)	Turns
NTA bolts ICC init	5/8	4	16	N/A	47.6	
NTA bolts ICC fin	5/8	4	30.5	N/A	47.6	15.5-17 (total)
NTA FRAM	7/16	1	6.3	6.3	21	11
NTA FRAM Cont Pins-aft	7/16	2	12	12	23.6	See crib
NTA FRAM Cont Pins-fwd	7/16	2	6.3	N/A	34	See crib

ORU Identification:

ORU	Part number	Serial Number
Returning NTA	1F9600-1	0003

ORU Mass (NTA + FSE + FRAM) = ~870 lbs

Connector Inhibits:

Task	Inhibit
NTA install on ICC FSE	ICC-Lite Heater Power: R1 PL AFT MN B – OFF
NTA install on ESP2	RPCM N1RS2_B RPC 7 – OPEN, CL cmd INH RPCM S04B_F RPC 11 – OPEN, CL cmd INH

Notes:
1. None

Cautions:
1. None

Warnings:
1. None

COL VENT CAP INSTALLATION/REMOVAL (01: 00)

NOTE: The following procedure will require updates from MCC-H prior to execution. Details for IVA systems configuration, inhibits and PGT settings will need to be provided. Custom PGT settings will be required

IV/SSRMS	EV1 (SSRMS)	EV2
1. IV: Verify w/MCC-H: ❑ Valve assy off ❑ Valve heater off ❑ IVA valve closed 2. Record torque/turns Bolt / Grn LED / Initial Turns/Torque / Final Turns/Torque 1 ☐ _____/_____ ____/_____ 2 ☐ _____/_____ ____/_____ 3 ☐ _____/_____ ____/_____ 4 ☐ _____/_____ ____/_____ 5 ☐ _____/_____ ____/_____ 6 ☐ _____/_____ ____/_____ 7 ☐ _____/_____ ____/_____ 8 ☐ _____/_____ ____/_____	CDA VENT VALVE REMOVAL/CAP INSTALLATION 1. Temp stow crewlock bag on handrails 2. RET MLI cover to nearby handrail 3. Remove MLI cover (Velcro) 4. Attach RET to CDA____ vent (s/n ____) 5. Release TA clamp; demate vent power cable connector ❑ P01 from J01 for CDA1 ❑ P02 from J02 for CDA2 ❑ P01 from J01 for CDA3 ❑ P02 from J02 for CDA4 6. Retrieve 10-Ext 5/16th; install on PGT CAUTION O-rings on Vent and Cap may be loose 7. PGT **[TBD (4.8 ft-lb), CCW2, 30.5] 10-Ext 5/16** Release vent bolts (6) captive, ~TBD turns 8. Remove vent,verify o-rings secure; temp stow near crewlock bag 9. Retrieve vent cap from crewlock bag 10. Remove cap MLI; temp stow cap 11. Install MLI on vent 12. Stow vent in crewlock bag 13. Align 3 notches in cap flange with pins on COL feedthrough plate 14. PGT **[A1 (2.5 ft-lb), CW2, 30.5] 10-Ext 5/16**. Drive cap bolts (8) incross pattern 15. PGT **[TBD (custom setting 3.2 ft-lb), CW2, 30.5] 10-Ext 5/16**. Torque cap bolts (8) in cross pattern 16. Remove socket from PGT; stow	

COL VENT CAP INSTALLATION/REMOVAL (01: 00) (Cont)

IV/SSRMS	EV1 (SSRMS)	EV2
	17. Stow PGT 18. Retrieve RET from cap 19. Reinstall MLI (use alignment mark for orientation); retrieve RET 20. Retrieve crewlock bag; stow on BRT	

COL VENT CAP INSTALLATION/REMOVAL (01:00)

IV/SSRMS	EV1 (SSRMS)	EV2
1. IV: Verify w/MCC-H: ❑ Valve assy off ❑ Valve heater off ❑ IVA valve closed 2. Record torque/turns Bolt / Grn LED / Initial Turns/Torque / Final Turns/Torque 1 ☐ _____/_____ _____/_____ 2 ☐ _____/_____ _____/_____ 3 ☐ _____/_____ _____/_____ 4 ☐ _____/_____ _____/_____ 5 ☐ _____/_____ _____/_____ 6 ☐ _____/_____ _____/_____	CDA CAP REMOVAL/VENT INSTALLATION 1. Temp stow crewlock bag on handrails 2. RET MLI cover to nearby HR 3. Remove MLI cover (Velcro) 4. Attach RET to cap 5. Retrieve 10-Ext 5/16th; install on PGT CAUTION O-rings on Vent and Cap may be loose 6. PGT **[TBD (4.8 ft-lb), CCW2, 30.5] 10-Ext 5/16** Release cap bolts (8) captive, ~TBD turns 7. Remove cap, verify O-rings secure; temp stow near crewlock bag 8. Retrieve vent from crewlock bag 9. Remove vent MLI; temp stow vent 10. Install MLI on vent cap 11. Stow vent cap in crewlock bag 12. Align 3 notches in vent flange with pins on COL feedthrough plate 13. PGT **[A1 (2.5 ft-lb), CW2, 30.5] 10-Ext 5/16** Drive valve bolts (6) in cross pattern 14. PGT **[TBD (custom setting 3.2 ft-lb), CW2, 30.5] 10-Ext 5/16**. Torque valve bolts (6) in cross pattern 15. Remove socket from PGT; stow 16. Stow PGT 17. Inspect and mate vent valve power cable connector ❑ P01 to J01 for CDA1 ❑ P02 to J02 for CDA2 ❑ P01 to J01 for CDA3 ❑ P02 to J02 for CDA4 18. Close TA clamp 19. Retrieve RET from vent valve 20. Reinstall MLI (use alignment marks for orientation); retrieve RET 21. Retrieve crewlock bag; stow on BRT	

COL VENT CAP INSTALLATION/REMOVAL (01:00) (Cont)

IV/SSRMS

1. IV: Verify w/MCC-H
   - ❑ Valve assy off
   - ❑ Valve heater off
   - ❑ IVA valve closed

2. Record torque/turns

Bolt	Grn LED	Initial Turns/Torque	Final Turns/Torque
1	☐	_____/_____	____/_____
2	☐	_____/_____	____/_____
3	☐	_____/_____	____/_____
4	☐	_____/_____	____/_____
5	☐	_____/_____	____/_____
6	☐	_____/_____	____/_____
7	☐	_____/_____	____/_____
8	☐	_____/_____	____/_____

EV1 (SSRMS)

VVDD AND PPRA VENT REMOVAL/CAP INSTALLATION

1. Temp stow crewlock bag on handrails
2. RET MLI to nearby HR
3. Remove MLI cover (Velcro)
4. Attach RET to valve
5. Retrieve 10-Ext 5/16th; install on PGT

> CAUTION
> O-rings on Vent and Cap may be loose

6. PGT **[TBD (4.8 ft-lb), CCW2, 30.5] 10-Ext 5/16**
   Release vent bolts (8) captive, ~TBD turns
7. Remove vent, verify O-rings secure; temp stow near crewlock bag
8. Retrieve vent cap from crewlock bag
9. Remove cap MLI; temp stow cap
10. Install MLI on vent
11. Stow vent in crewlock bag
12. Align 3 notches on cap flange with pins on COL feed through plate
13. PGT **[A1 (2.5 ft-lb), CW2, 30.5] 10-Ext 5/16**
    Drive cap bolts (8) in cross pattern
14. PGT **[TBD (custom setting 3.2 ft-lb), CW2, 30.5] 10-Ext 5/16**. Torque cap bolts (8) in cross pattern
15. Remove socket from PGT; stow
16. Stow PGT
17. Retrieve RET from cap
18. Reinstall MLI (use alignment marks for orientation); retrieve RET
19. Retrieve crewlock bag; stow on BRT

EV2

COL VENT CAP INSTALLATION/REMOVAL (01:00) (Cont)

IV/SSRMS	EV1 (SSRMS)	EV2
1. IV: Verify w/MCC-H: ❑ Valve assy off ❑ Valve heater off ❑ IVA valve closed 2. Record torque/turns Bolt / Grn LED / Initial Turns/Torque / Final Turns/Torque 1 ☐ _____/_____ ____/_____ 2 ☐ _____/_____ ____/_____ 3 ☐ _____/_____ ____/_____ 4 ☐ _____/_____ ____/_____ 5 ☐ _____/_____ ____/_____ 6 ☐ _____/_____ ____/_____ 7 ☐ _____/_____ ____/_____ 8 ☐ _____/_____ ____/_____	<u>VVDD AND PPRA CAP REMOVAL/VENT INSTALL</u> 1. Temp stow crewlock bag on handrails 2. RET MLI to nearby HR 3. Remove MLI cover (Velcro) 4. Attach RET to cap 5. Retrieve 10-Ext 5/16th; install on PGT <u>CAUTION</u> O-rings on Vent and Cap may be loose 6. PGT **[TBD (4.8 ft-lb), CCW?, 30.5] 10-Ext 5/16** Release cap bolts (8) captive, ~TBD turns 7. Remove cap, verify O-rings secure; temp stow near crewlock bag 8. Retrieve vent from crewlock bag 9. Remove vent MLI; temp stow vent 10. Install MLI on vent cap 11. Stow vent cap in crewlock bag 12. Align 3 notches in valve flange with pins on COL feedthrough plate 13. PGT **[A1 (2.5 ft-lb), CW2, 30.5] 10-Ext 5/16** Drive valve bolts (8) in cross pattern 14. PGT **[TBD (custom setting 3.2 ft-lb), CW2, 30.5] 10-Ext 5/16**. Torque valve bolts (8) in cross pattern 15. Remove socket from PGT; stow 16. Stow PGT 17. Retrieve RET from vent valve 18. Reinstall MLI use alignment mark for orientation; retrieve RET 19. Retrieve crewlock bag; stow on BRT	

COL VENT CAP INSTALLATION/REMOVAL – TASK DATA SHEET

Estimated Task Duration:

	With SSRMS	Without SSRMS
One EV Crew	1:00	N/A
Two EV Crew	N/A	N/A

Tools:

EV1	EV2
• PGT 10-Ext 5/16 • RET (5) • BRT • Crewlock bag • Vent cap & MLI cover • Socket caddy	• N/A

EVA Fasteners:

Fastener Name	Head Size	Qty	Final Torque (ft-lb)	Release Torque (ft-lb)	Failure Torque (ft-lb)	Turns
Vent cap	5/16	8	**3.2 ft-lb**	4.8 ft-lb	6.8 ft-lb (inst) 7.0 ft-lb (rmvl)	TBD
CDA	5/16	6	**3.2 ft-lb**	4.8 ft-lb	6.8 ft-lb (inst) 7.0 ft-lb (rmvl)	TBD
VVDD	5/16	8	**3.2 ft-lb**	4.8 ft-lb	6.8 ft-lb (inst) 7.0 ft-lb (rmvl)	TBD
PPRA	5/16	8	**3.2 ft-lb**	4.8 ft-lb	6.8 ft-lb (inst) 7.0 ft-lb (rmvl)	TBD

Foot Restraints:

Task	WIF	Setting
Port aft	SSRMS	
Port forward	SSRMS	

ORU Identification:

ORU	Part number	Serial Number
CDA/VVDD Vent Cap	p/n B41098	TBD
PPRA Vent Cap	B41101	TBD

ORU mass: TBD

EVA Connectors:

Harness	To	Clamp (#)	Conn Size	Function
CDA Vent electrical connector	P01 to J01 for CDA1 P02 to J02 for CDA2 P01 to J01 for CDA3 P02 to J02 for CDA4		TBD	Power (TBD)

Connector Inhibits:

Task	Inhibit
CDA Vent	TBD

Notes:

1. Changeout of a vent valve has 3 parts:
   a. EVA vent removal/cap installation
   b. IVA valve R&R
   c. EVA cap removal/vent installation
2. Two sockets (10" x 5/16" wobble) were flown for Columbus (p/n SEG33114692-301)
3. There is no soft dock when mounting the vent or vent cap
4. Vent/Cap bolts are captive
5. Custom PGT setting is required to meet torque requirements for seal

Cautions:

1. None

Warnings:

1. The valve assembly to be replaced and the vent section heater shall be powered off
2. The internal valves of the VVDD shall be closed before the EVA crewmember reaches the worksite

COL VENT CAP INSTALLATION/REMOVAL – TASK DATA SHEET (Cont)

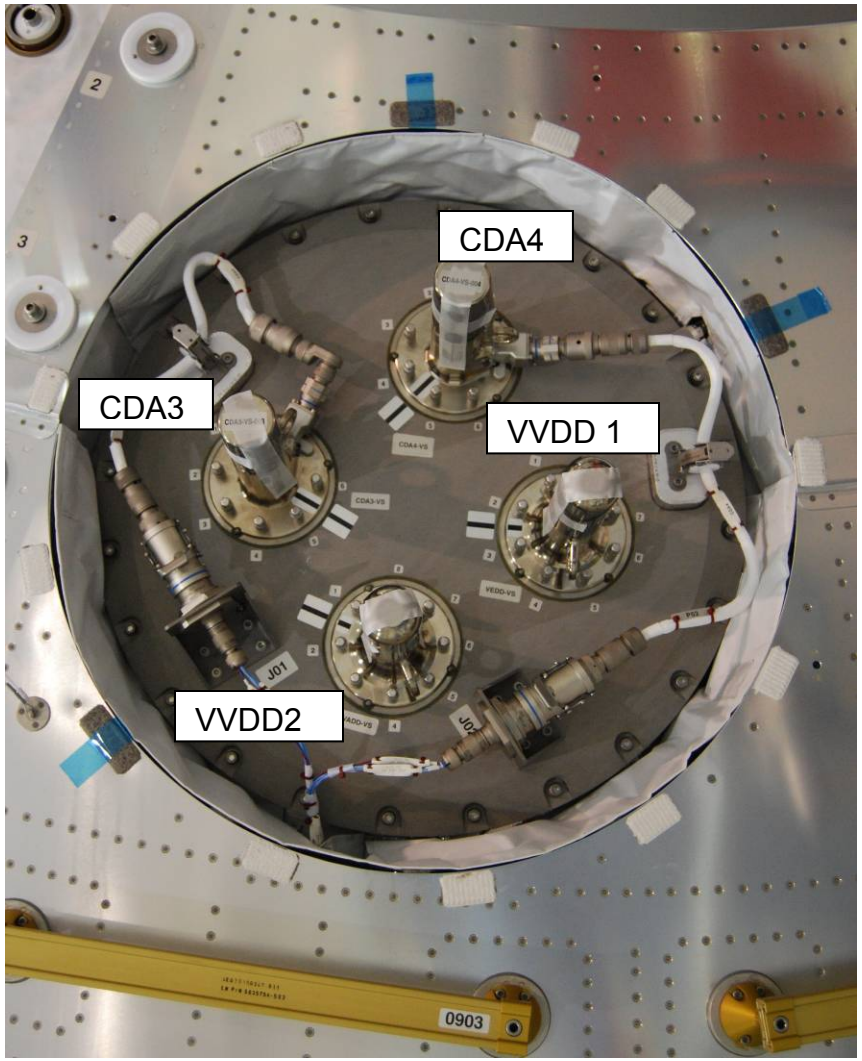

Port Feedthrough – Forward (PFF)
(VVDD 2 units, CDA03 and CDA04)

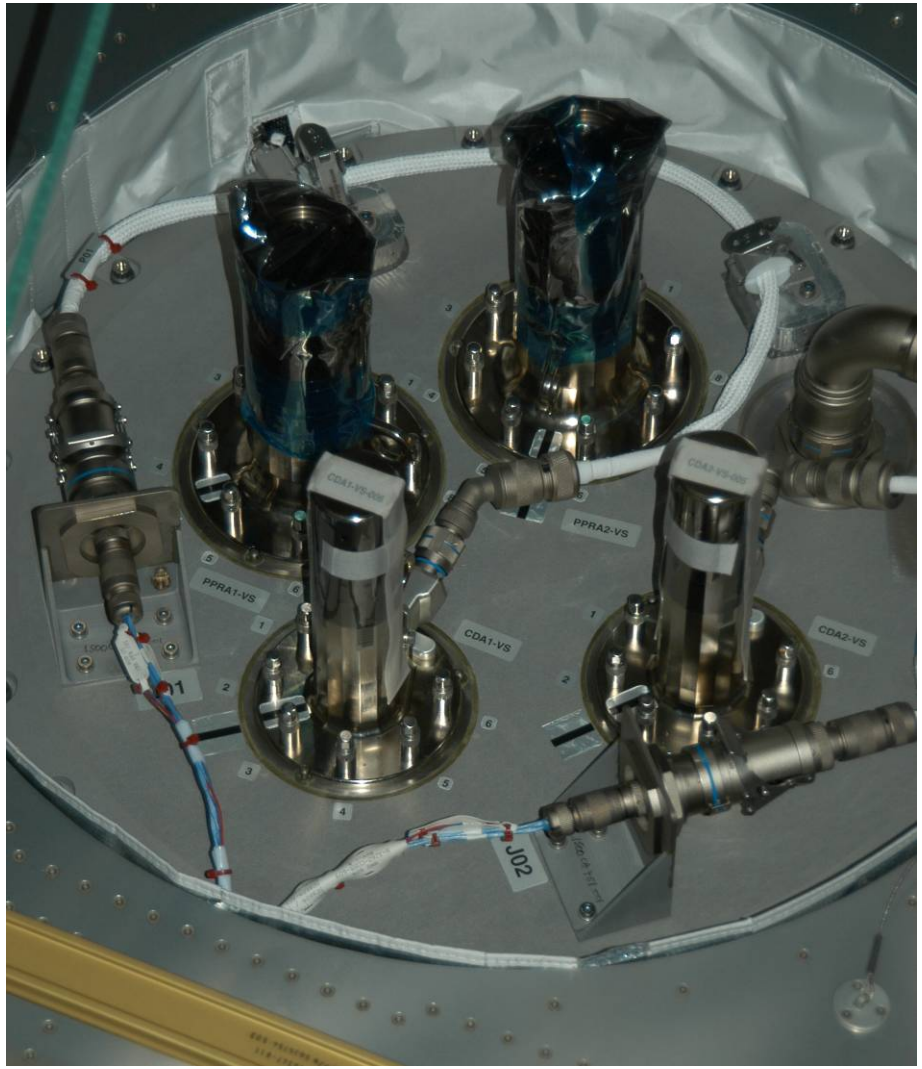

Port Feedthrough – Aft (PFA)
(PPRA 2 units, CDA 01 and CDA02)

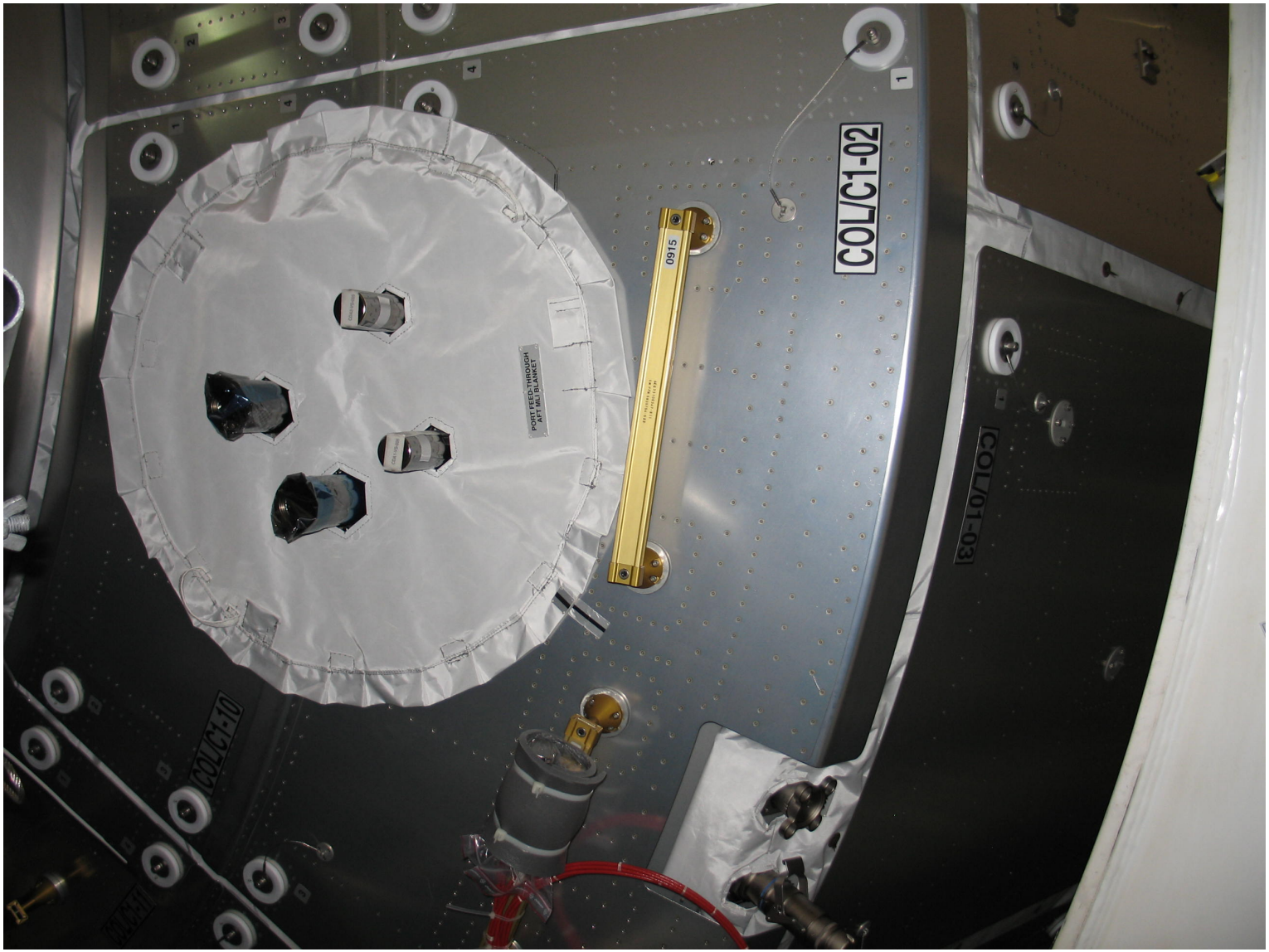

Port Feedthrough – Aft MLI blanket

COL VENT CAP INSTALLATION/REMOVAL – TASK DATA SHEET (Cont)

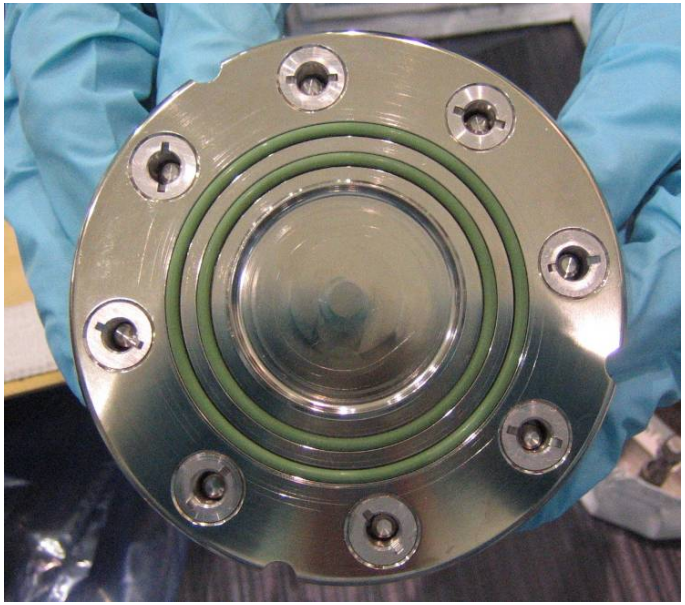

This Page Intentionally Blank

FLIGHT SPECIFIC EVA REFERENCE

PLB LAYOUT ..... FS 18-3
ICC LAUNCH/LANDING CONFIG ..... FS 18-4
COLUMBUS IN PLB – LTA CABLE, CBM SEAL COVERS, PDGF ..... FS 18-5
MDPS PANEL – HOLE CONFIG ..... FS 18-6
MDPS ALLEN TOOL/"T-HANDLE TOOL" ..... FS 18-7
MDPS SOCKET CONSTRAINT NEAR SILL ..... FS 18-8
PDGF ON SIDEWALL CARRIER ..... FS 18-9
PDGF SIDEWALL CARRIER ..... FS 18-10
EDF FASTENER (NBL/FLIGHT UNIT) ..... FS 18-11
PDGF UNDERSIDE ..... FS 18-12
PDGF MOUNTING RING ..... FS 18-13
PDGF CABLE CONNECTIONS ..... FS 18-14
EDF SOCKET INTERFERENCE (COLUMBUS PDGF) ..... FS 18-15
PDGF J400/J401 CONNECTORS ..... FS 18-16
P6 PDGF ..... FS 18-17
EXTERNAL CABLE STOWAGE HARDWARE (ECSH) ..... FS 18-18
CBM SEAL COVER ..... FS 18-19
COLUMBUS PANELS, HANDRAILS, AND WIFs (STBD ENDCONE) ..... FS 18-20
COLUMBUS PANELS, HANDRAILS, AND WIFs (PORT ENDCONE) ..... FS 18-21
COLUMBUS PANELS, HANDRAILS, AND WIFs (ISS FWD FACING SIDE) ..... FS 18-22
COLUMBUS PANELS, HANDRAILS, AND WIFs (ISS AFT FACING SIDE) ..... FS 18-23
COLUMBUS EXPOSED PAYLOAD FACILITY HANDRAILS ..... FS 18-24
NITROGEN TANK ASSEMBLY (NTA) – FRONT SIDE, ELECTRICAL, BOLTS ..... FS 18-25
NTA – AFT SIDE, FLUID QDs ..... FS 18-26
NTA MLI ..... FS 18-27
P1 AFT SHROUD ..... FS 18-28
SOFT DOCK MECHANISM ..... FS 18-29
OTSD ..... FS 18-31
OTSD WIF ACTUATION ..... FS 18-32
OTSD ACTIVE CARRIAGE ..... FS 18-33
OTSD PASSIVE CARRIAGE ..... FS 18-35
OTSD PASSIVE CARRIAGE DETAILS ..... FS 18-36
OTSD LABELS ..... FS 18-37
NTA ON CETA ..... FS 18-38
FRAM ..... FS 18-39
SOLAR ..... FS 18-45
SOLAR CAUTION AREAS ..... FS 18-46
EUROPEAN TECHNOLOGY EXPOSURE FACILITY (EuTEF) ..... FS 18-47
EuTEF KEEP-OUT AREAS ..... FS 18-48
EuTEF HAZARD AREAS ..... FS 18-50
EXPOSED PAYLOAD FACILITY ..... FS 18-53
ON-ORBIT INSTALLED HANDRAIL ..... FS 18-55
ON-ORBIT INSTALLED WIF ..... FS 18-56
KEEL PIN COVER ..... FS 18-57
TRUNNION SCUFF PLATE COVER AND TRUNNION PIN COVER ..... FS 18-58
TRUNNION COVER 1/4 TURN FASTENER (GROUNDING) ..... FS 18-59
OIH/WIF LOCATIONS ON COLUMBUS ..... FS 18-60
GAP SPANNERS ON NODE 2 ..... FS 18-63
ESP-2 NADIR SITE 5 FOR CMG ..... FS 18-64
CMG ON FRAM ..... FS 18-66
CMG WITHOUT MLI ..... FS 18-67
ADJUSTABLE SHIM LOCATIONS ..... FS 18-68
CMG WITH MLI ..... FS 18-69
CMG ADJUSTABLE SHIMS ..... FS 18-70
BALLSTACK – MUTEE ..... FS 18-71

This Page Intentionally Blank

PLB LAYOUT

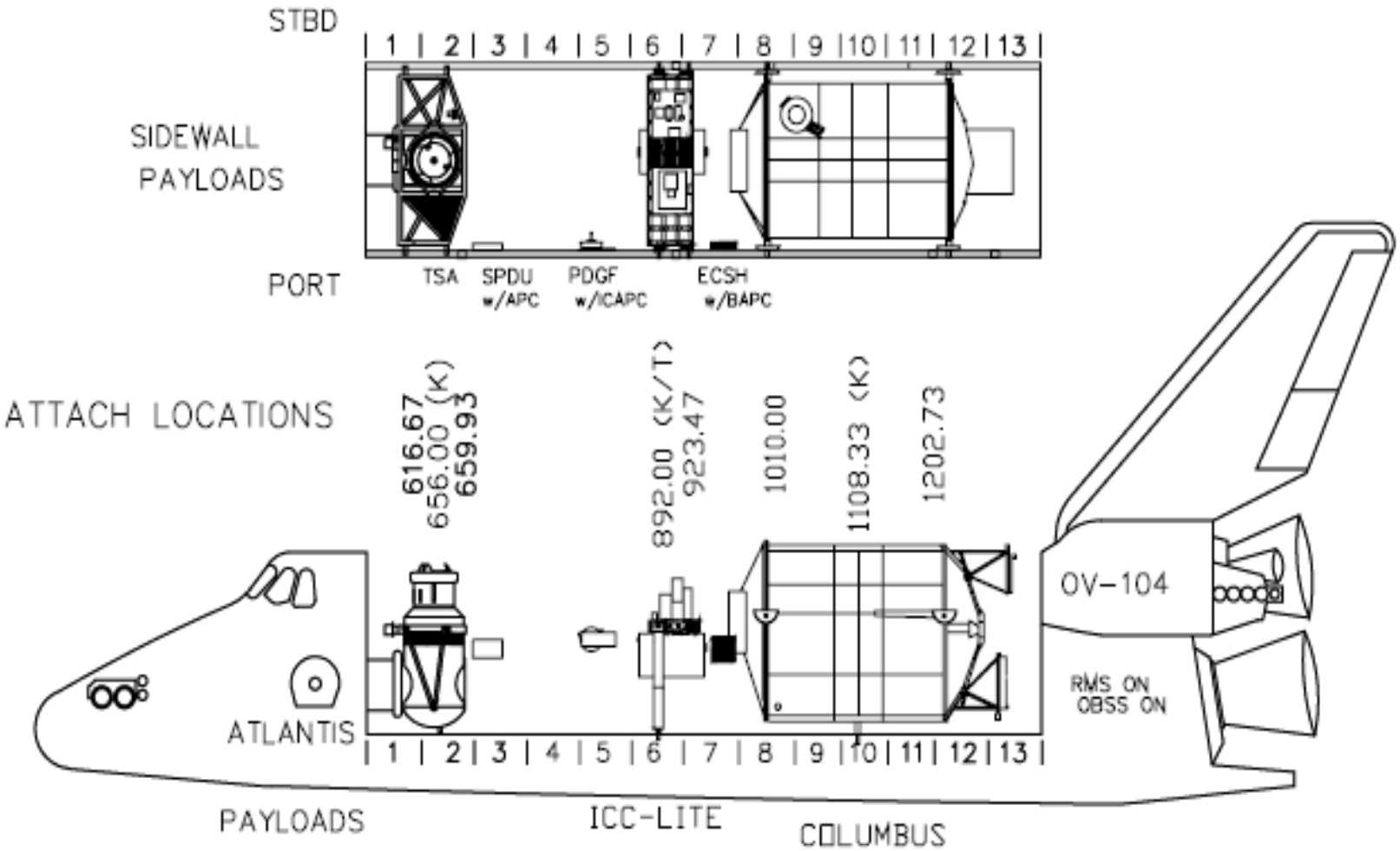
STBD
1 2 3 4 5 6 7 8 9 10 11 12 13
SIDEWALL PAYLOADS
PORT
TSA
SPDU w/APC
PDGF w/ICAPC
ECSH w/BAPC
ATTACH LOCATIONS
616.67
656.00 (K)
659.93
892.00 (K/T)
923.47
1010.00
1108.33 (K)
1202.73
OV-104
RMS ON
OBSS ON
ATLANTIS
1 2 3 4 5 6 7 8 9 10 11 12 13
PAYLOADS
ICC-LITE
COLUMBUS

ICC LAUNCH/LANDING CONFIG

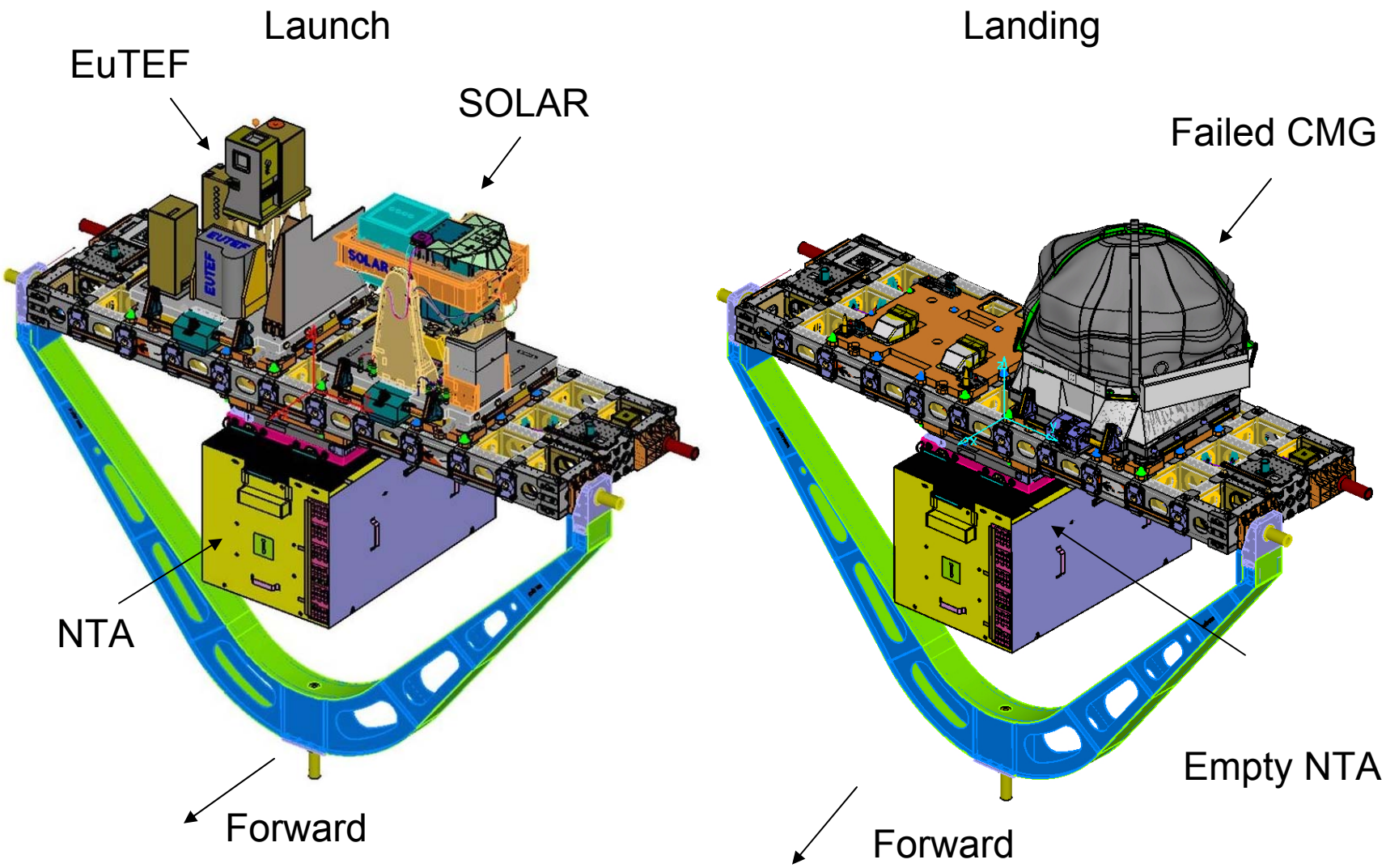

COLUMBUS IN PLB – LTA CABLE, CBM SEAL COVERS, PDGF

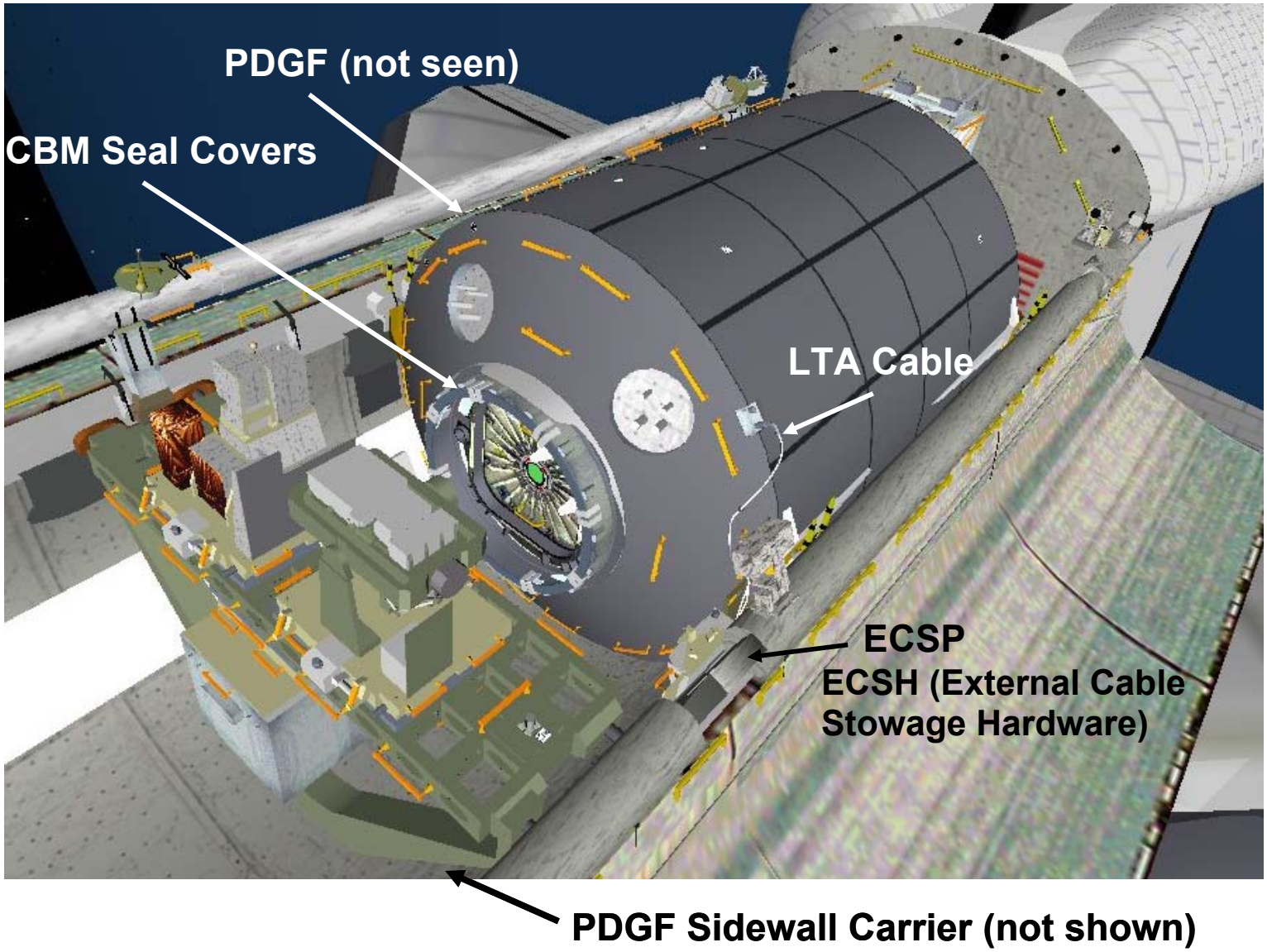

MDPS PANEL – HOLE CONFIG

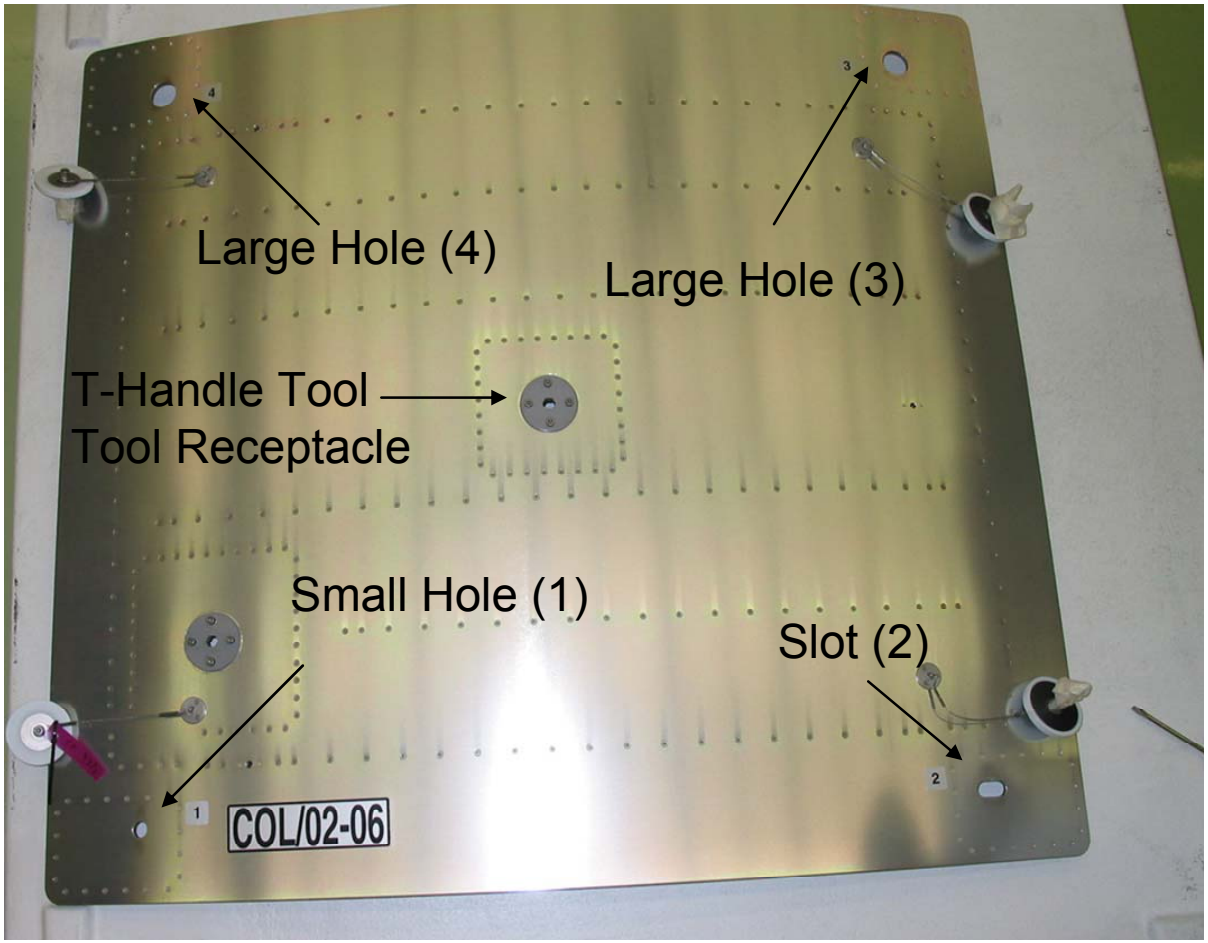

Panel Install Bolt Order: Bolt 1 first – then 2, then 3 and 4 in any order

(No on-orbit panel bolt removal order requirement)

MDPS ALLEN TOOL/"T-HANDLE TOOL"

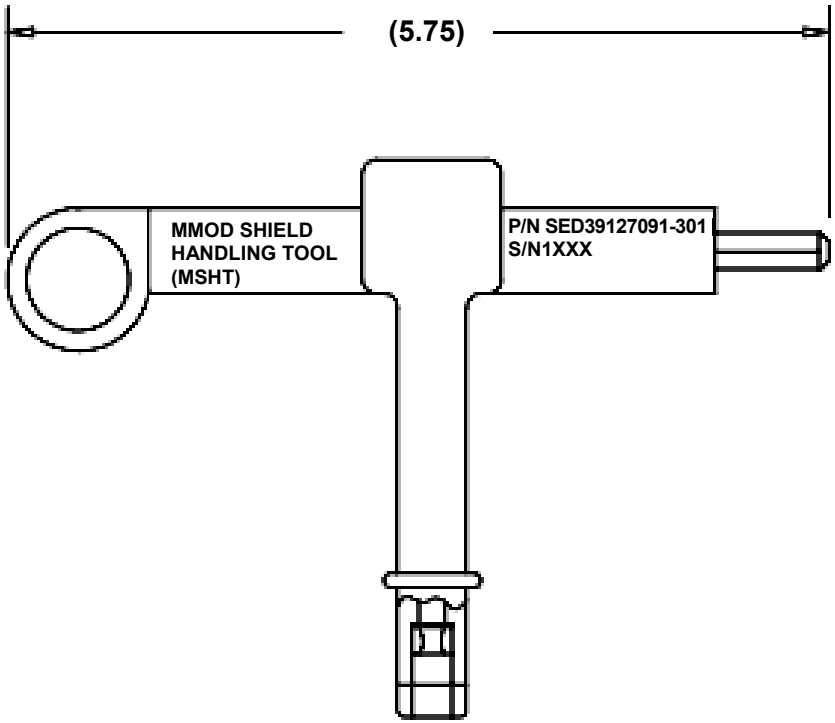

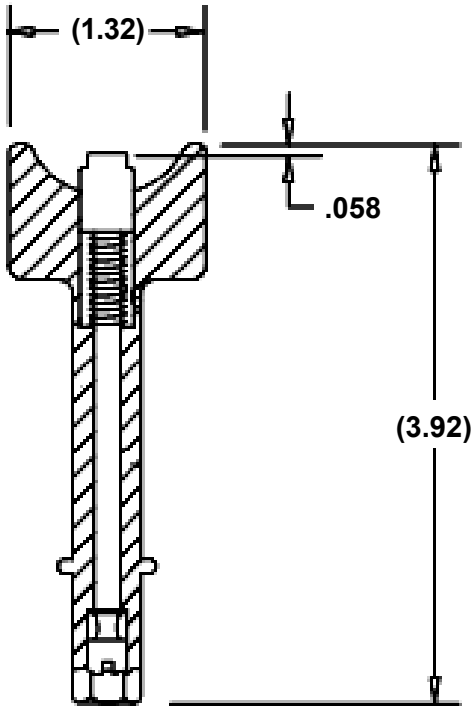

–301

MDPS SOCKET CONSTRAINT NEAR SILL

Tool Access/Clearances Using PGT w/6" Socket Extension (Wobble)

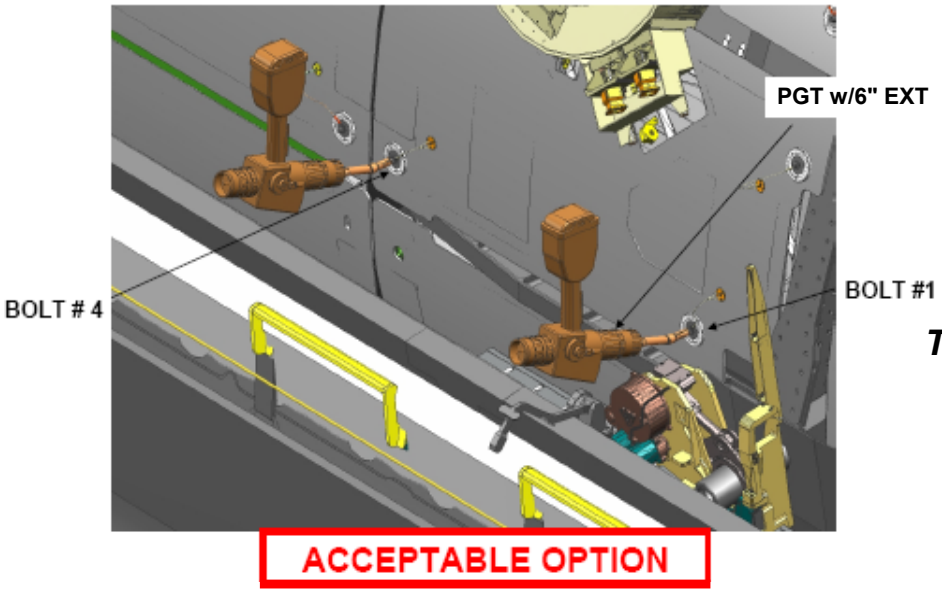

Tool Access/Clearances Using PGT w/2" Socket Extension (Straight)

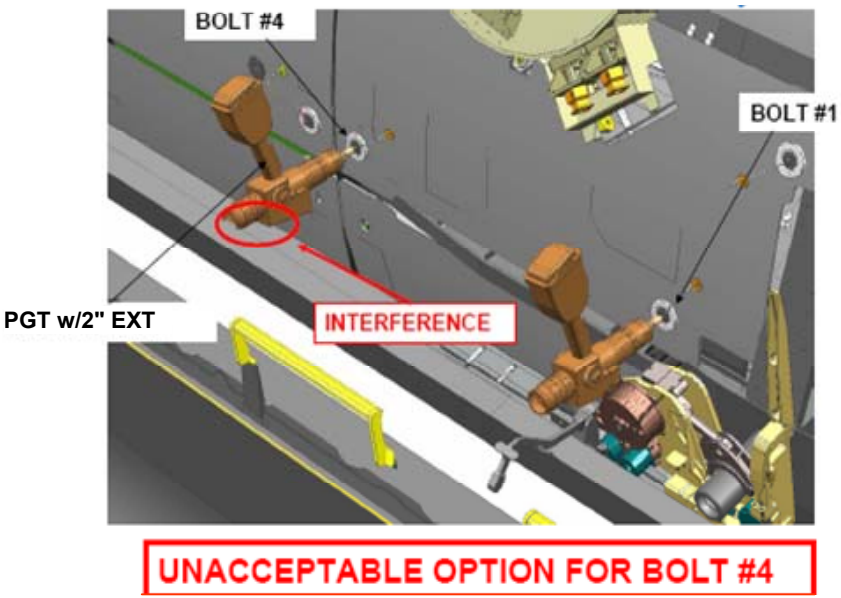

PDGF ON SIDEWALL CARRIER

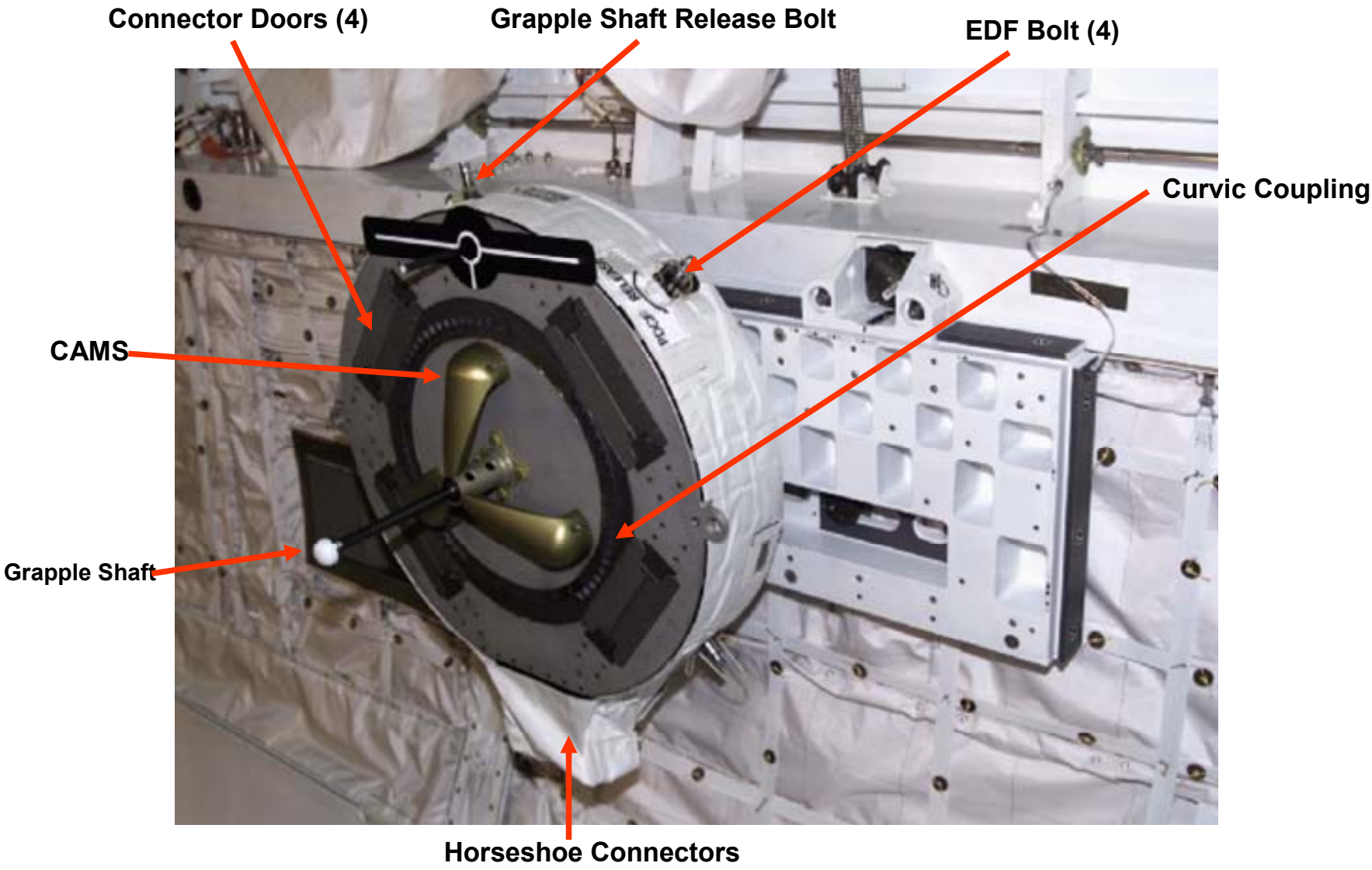

PDGF SIDEWALL CARRIER

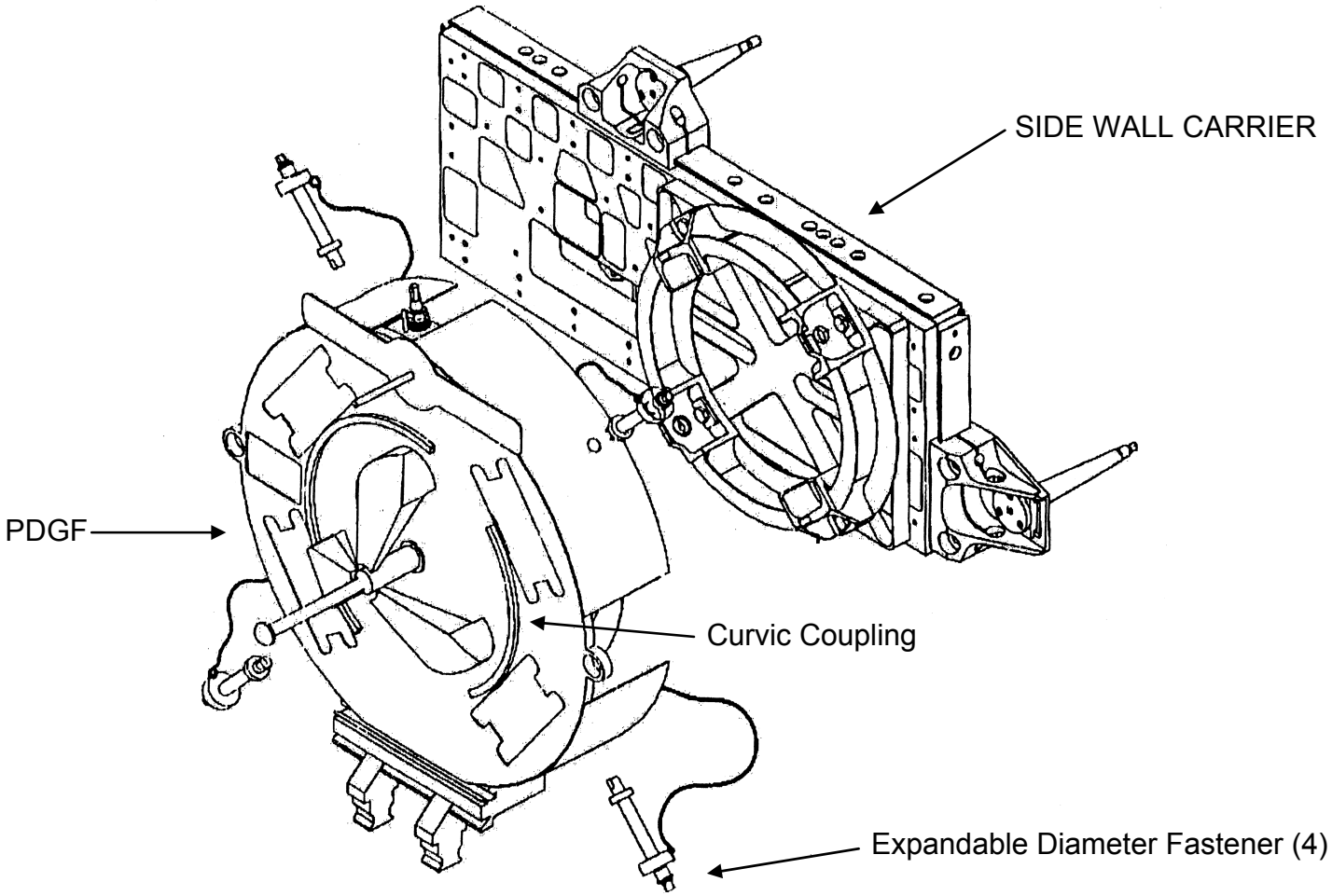

EDF FASTENER (NBL/FLIGHT UNIT)

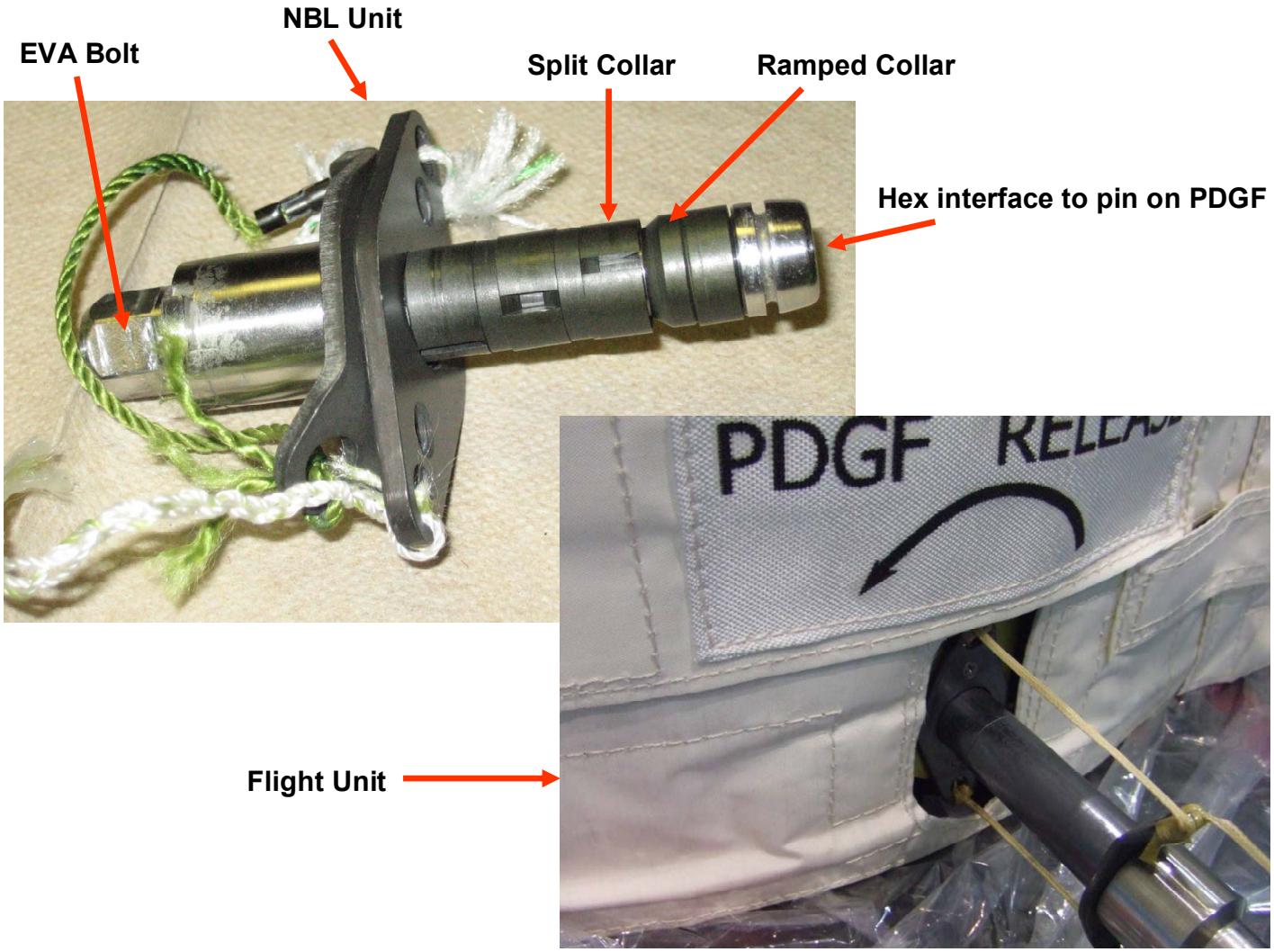

PDGF UNDERSIDE

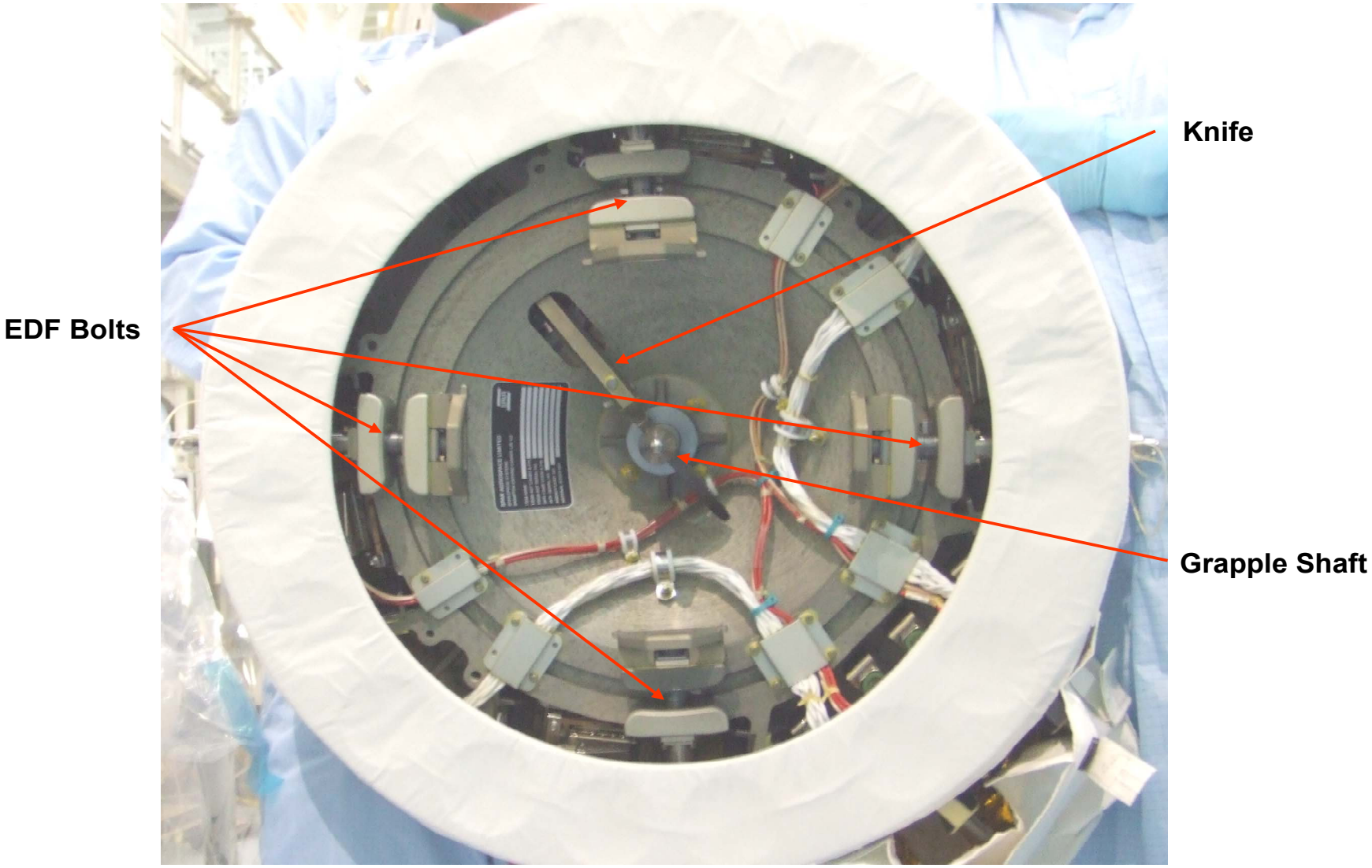

PDGF MOUNTING RING

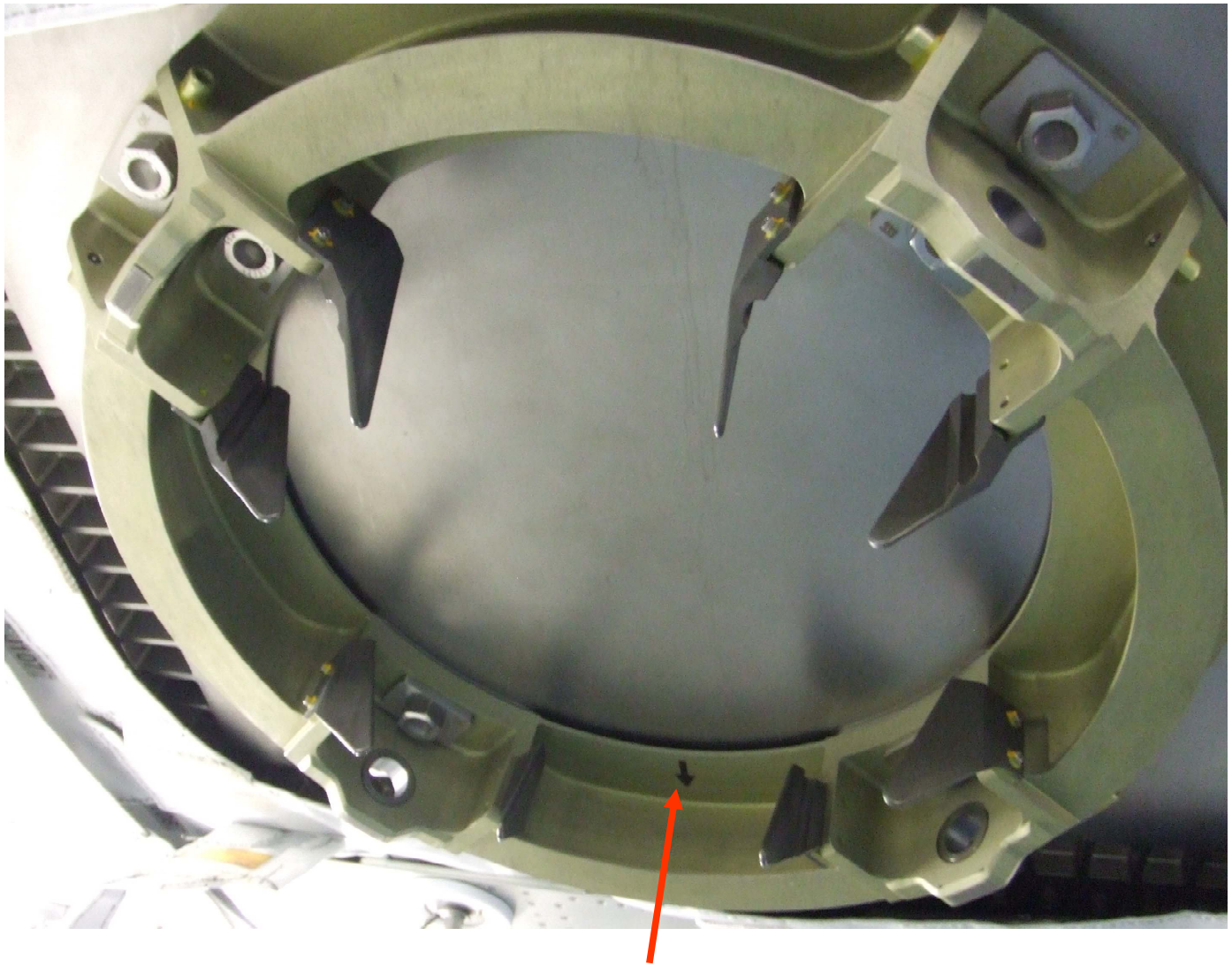

Alignment cue for target pin

PDGF CABLE CONNECTIONS

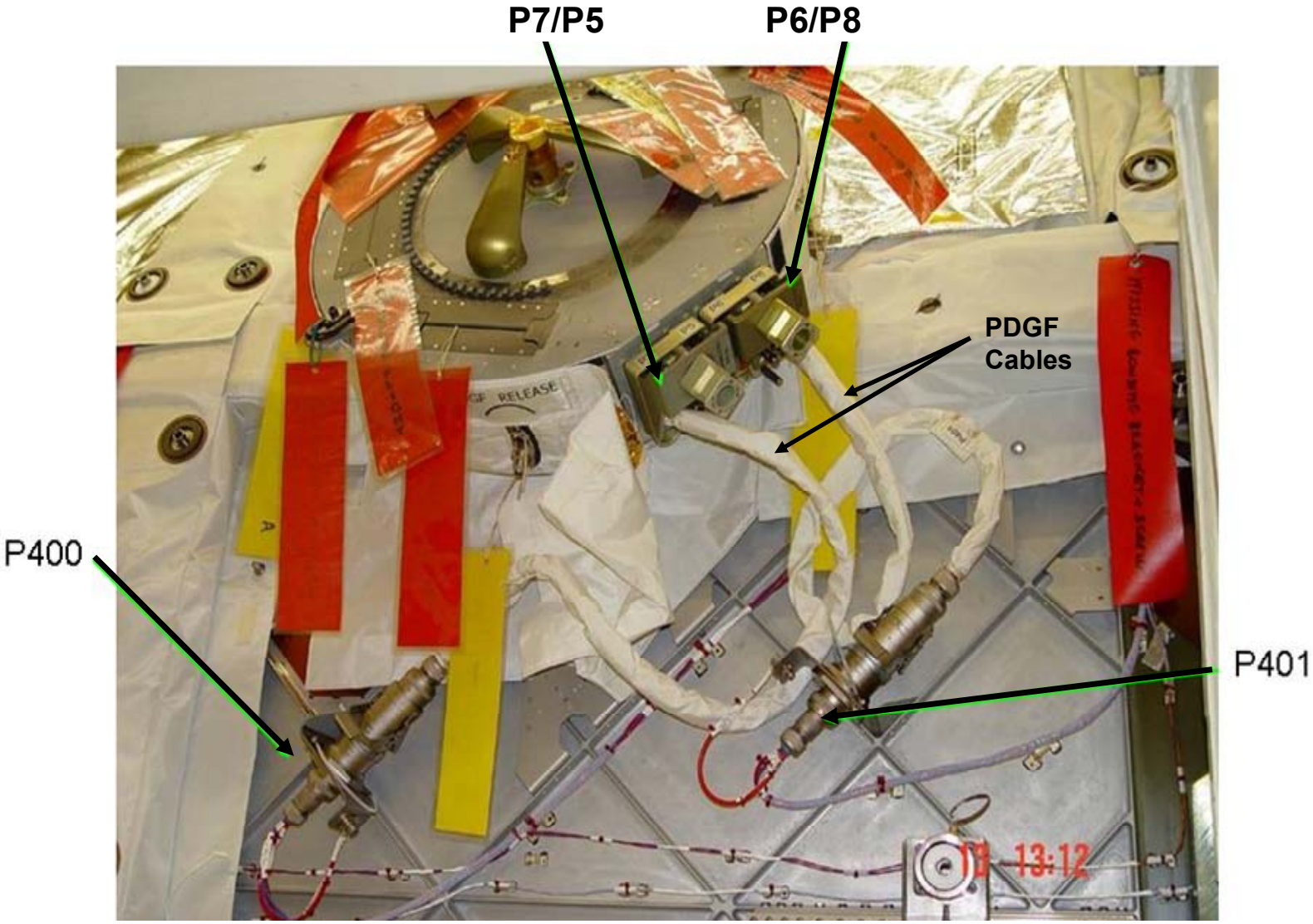

EDF SOCKET INTERFERENCE (COLUMBUS PDGF)

MDPS panel bolt housing (on structure beneath the panel) interferes with use of 6" wobble socket for EDF at 9 o'clock position. Use 12" Ext or RAD

PDGF J400/J401 CONNECTORS

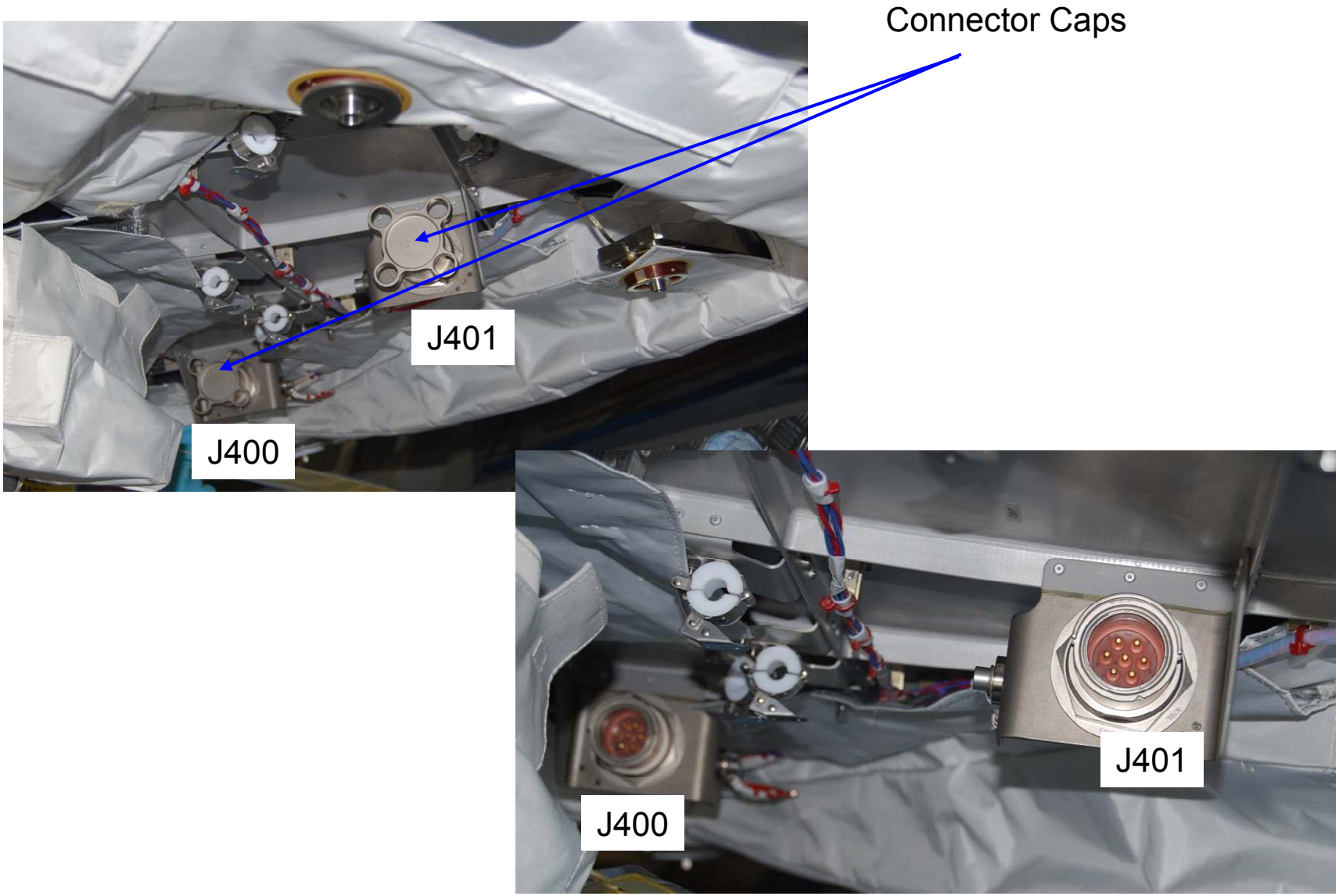

P6 PDGF

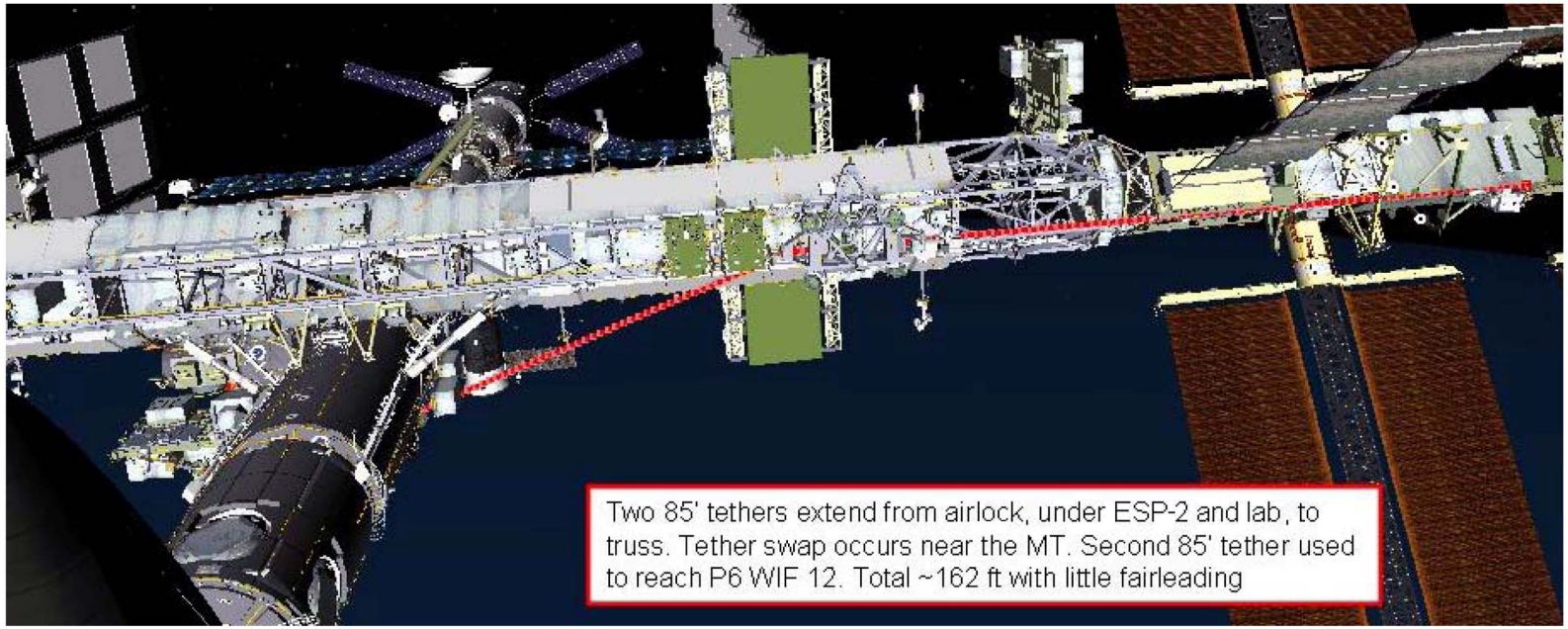

SARJ shown at 240 deg

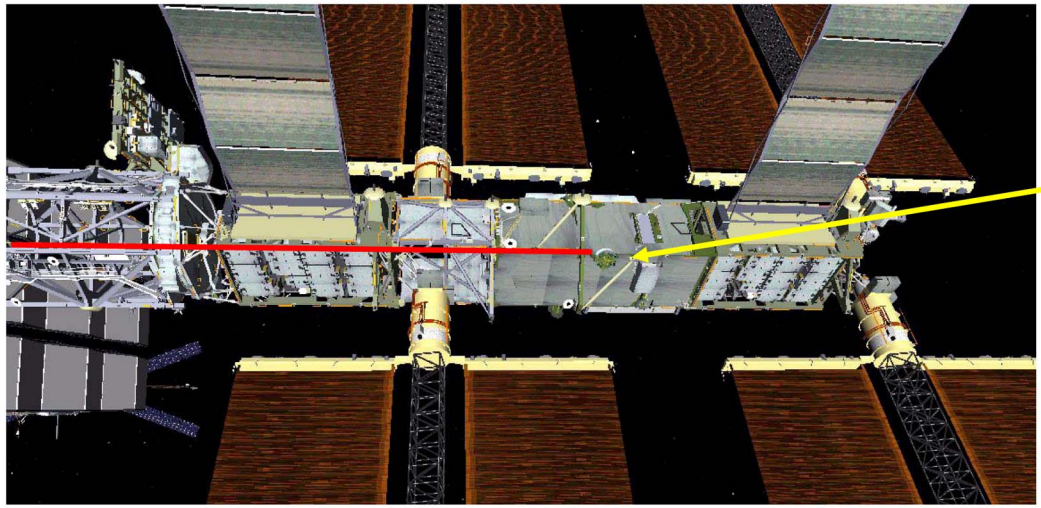

EXTERNAL CABLE STOWAGE HARDWARE (ECSH)

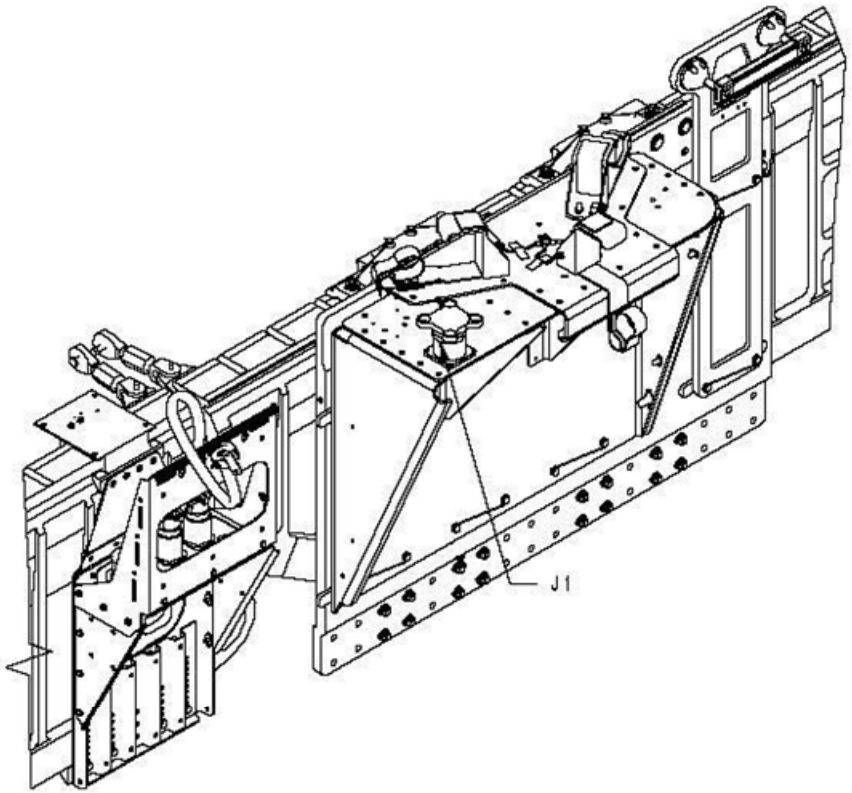

Launch

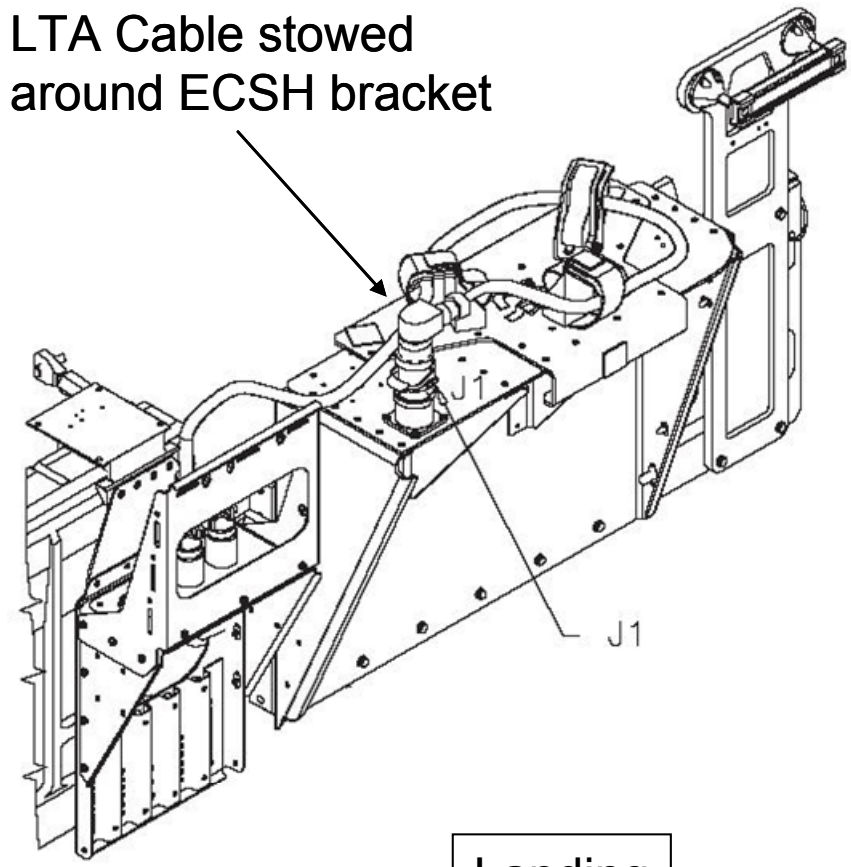

Landing

CBM SEAL COVER

- 8 covers Velcroed around the CBM ring must be removed before Columbus transfer to ISS
- Covers are not all the same configuration
- Avoid touching the CBM seals after the covers are removed; fairlead tether to avoid damaging seals

COLUMBUS PANELS, HANDRAILS, AND WIFs (STBD ENDCONE)

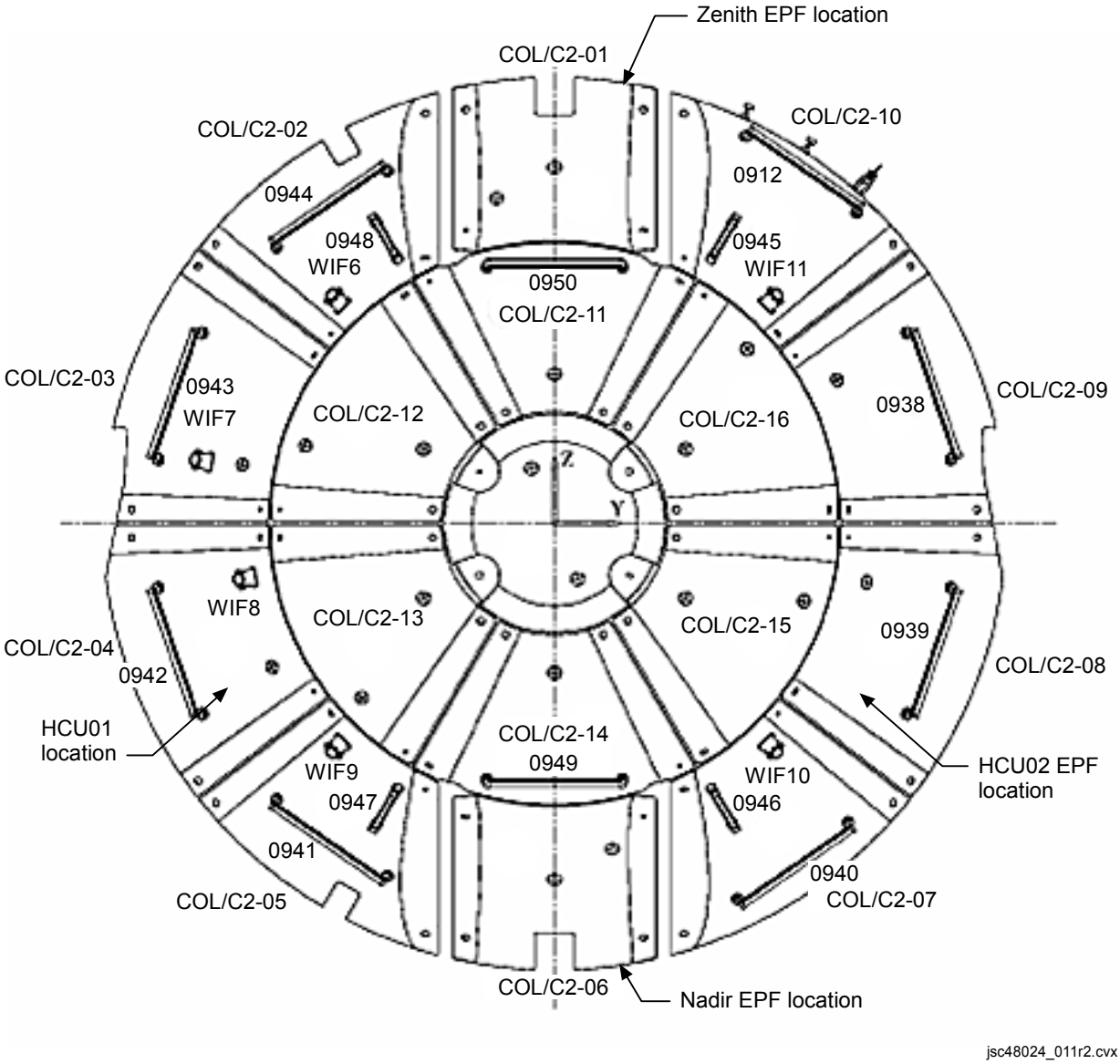

COLUMBUS PANELS, HANDRAILS, AND WIFs (PORT ENDCONE)

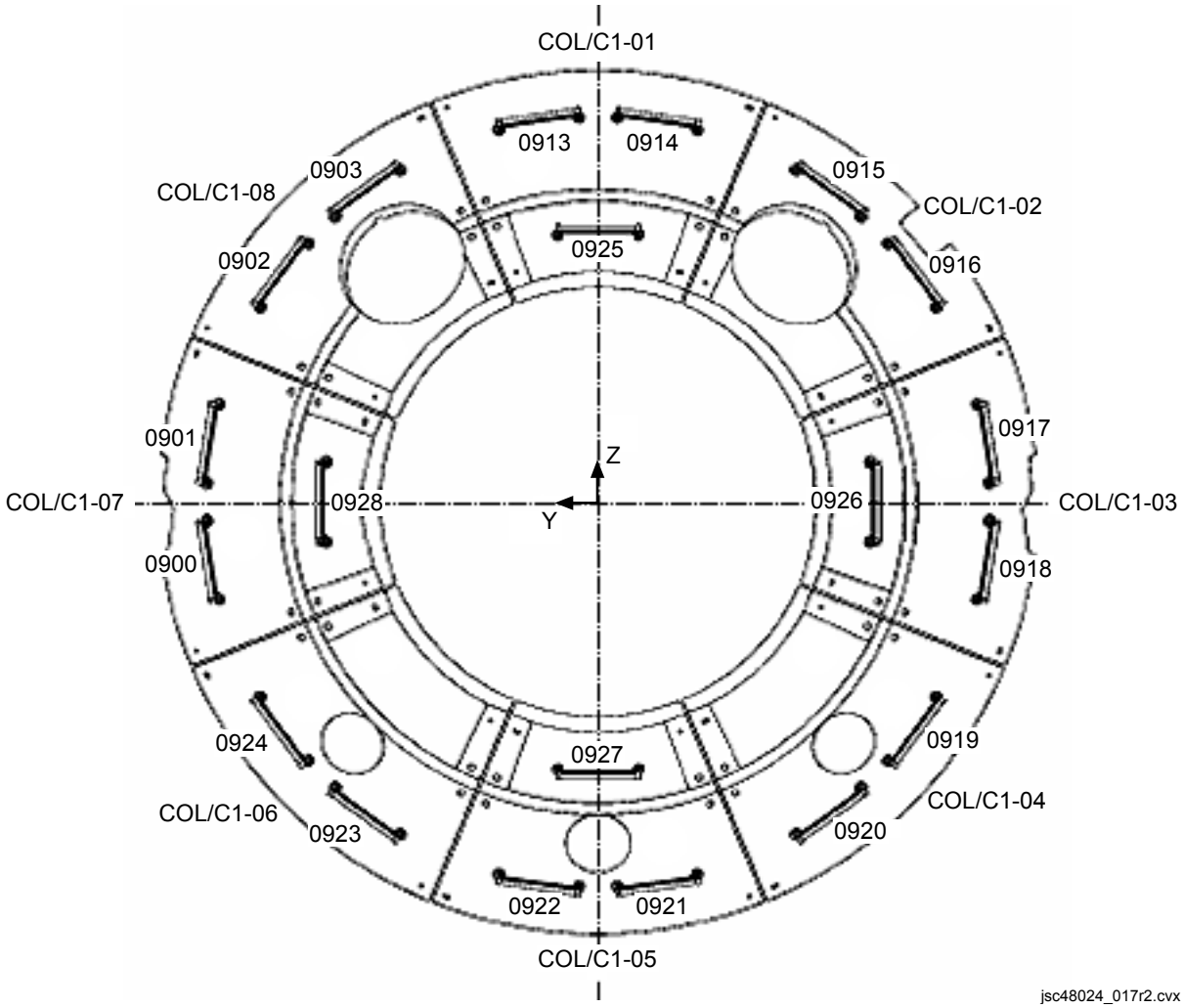

COLUMBUS PANELS, HANDRAILS, AND WIFs (ISS FWD FACING SIDE)

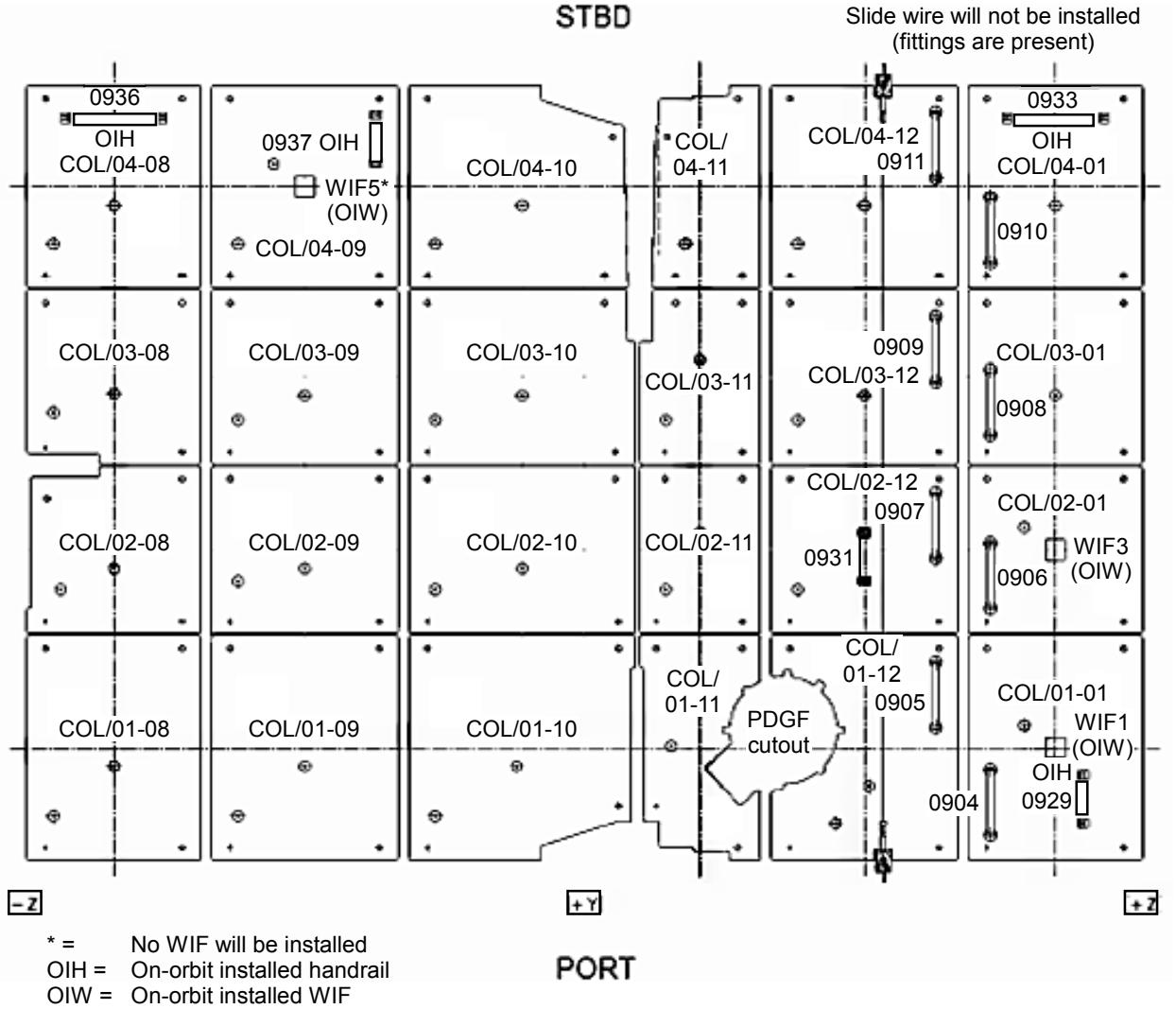

jsc48024_010r2.cvx

COLUMBUS PANELS, HANDRAILS, AND WIFs (ISS AFT FACING SIDE)

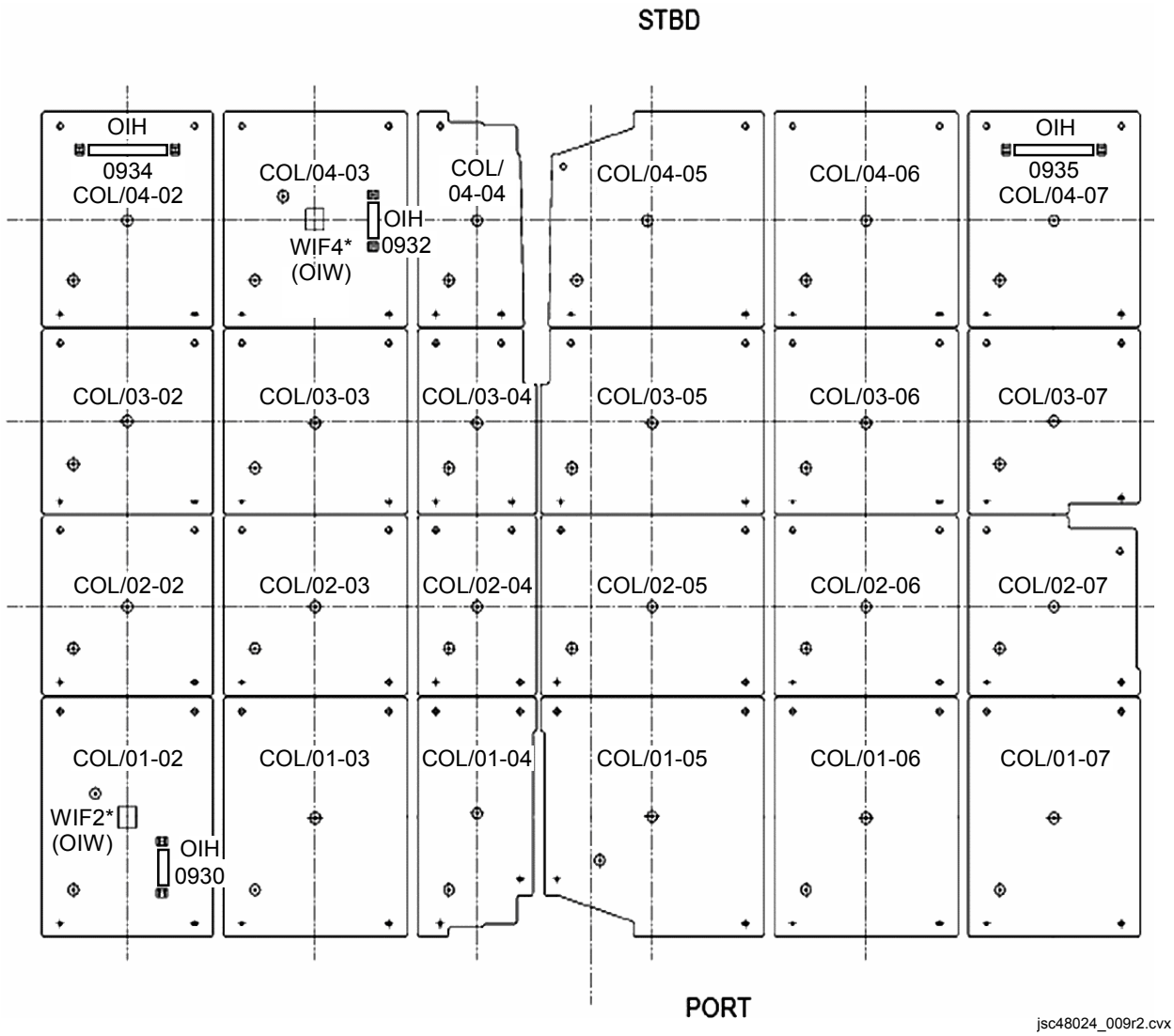

COLUMBUS EXPOSED PAYLOAD FACILITY HANDRAILS

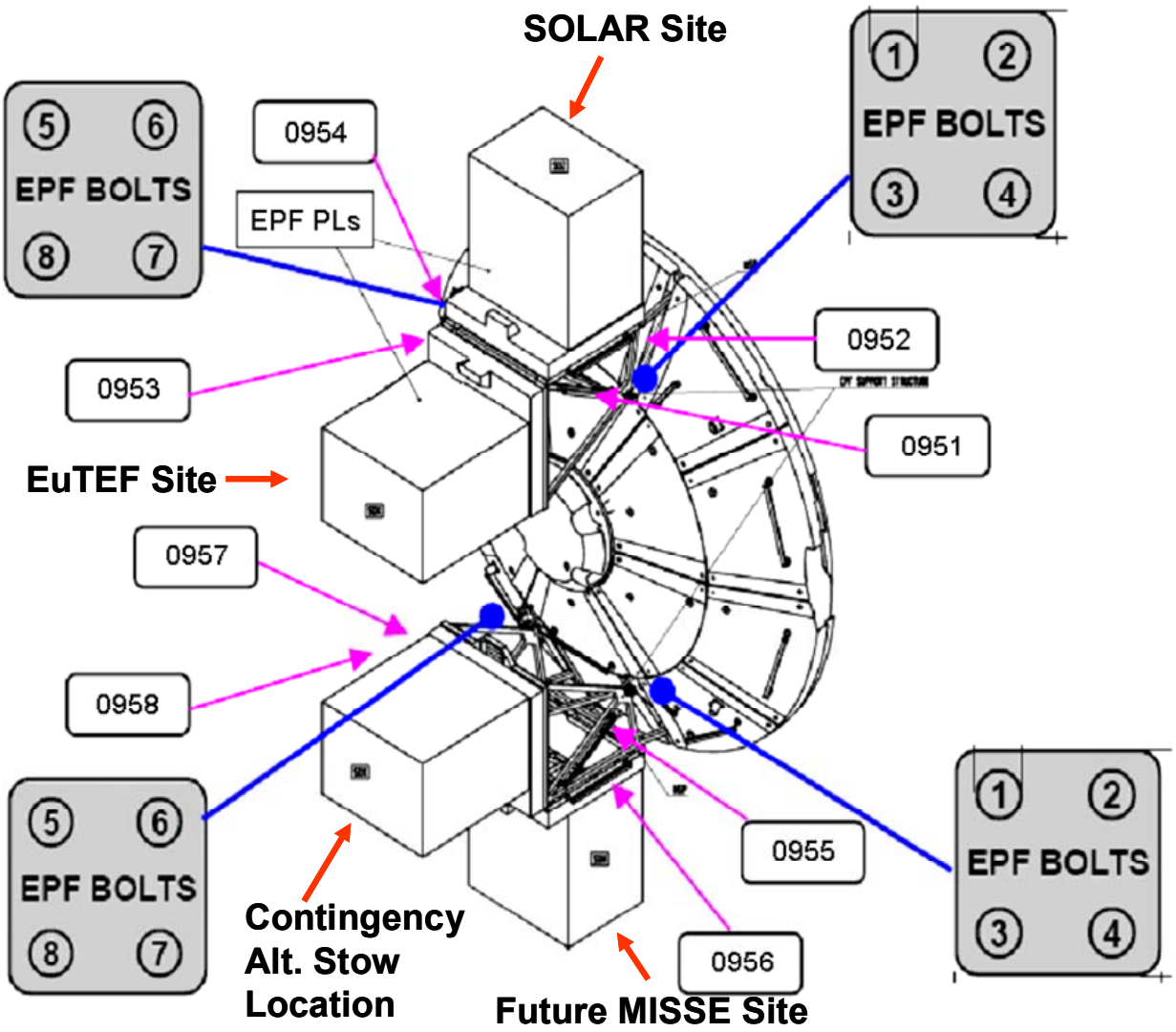

NITROGEN TANK ASSEMBLY (NTA) – FRONT SIDE, ELECTRICAL, BOLTS

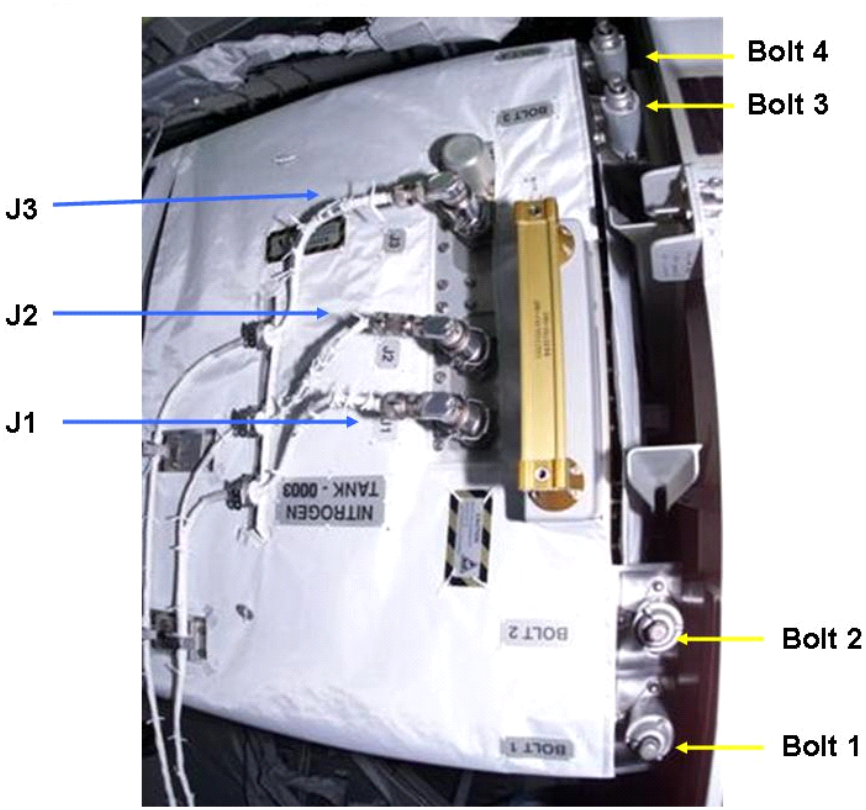

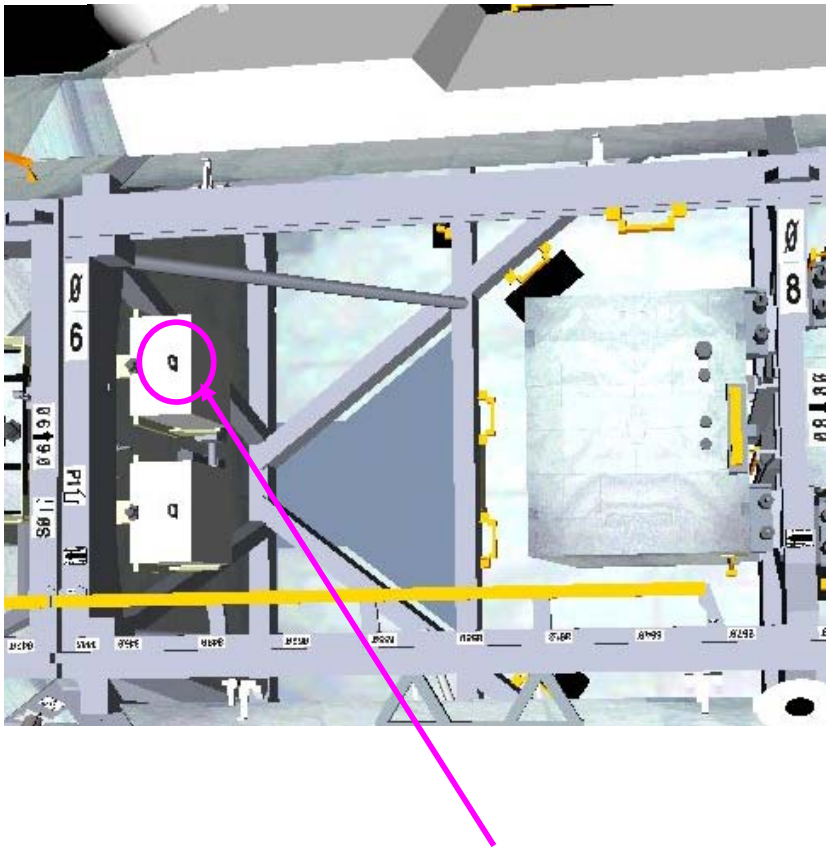

NTA – AFT SIDE, FLUID QDs

Fluid QD line names by NTA

Old P1	New P1	Old S1	New S1
F173 (nadir)	F1/M2/M1 (nadir)	F47 (nadir)	F2/M3/M2 (nadir)
F172 (zenith)	F2/M3/M2 (zenith)	F46 (zenith)	F1/M2/M1 (zenith)

Two N_2 fluid QD lines on the aft face of the NTA connect to the ATA on truss face 4

TA clamp nearest each line origin must remain closed

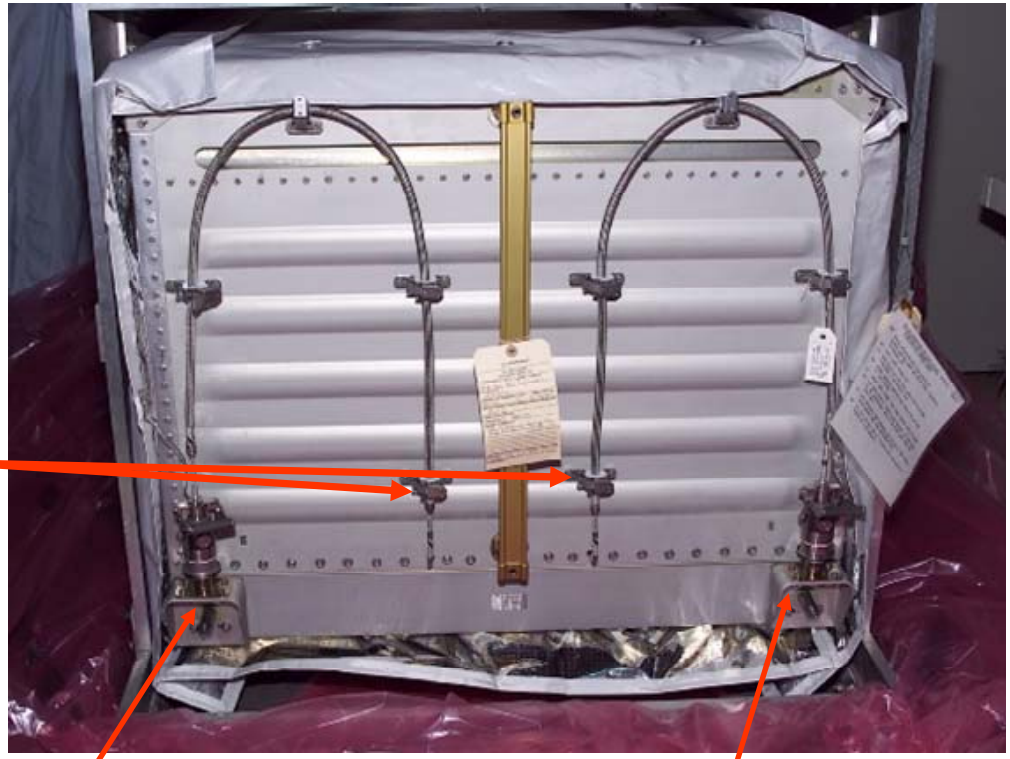

M3 Dummy Receptacle

M2 Dummy Receptacle

NTA MLI

Stbd (FRAM) and Fwd (Bolts) Side

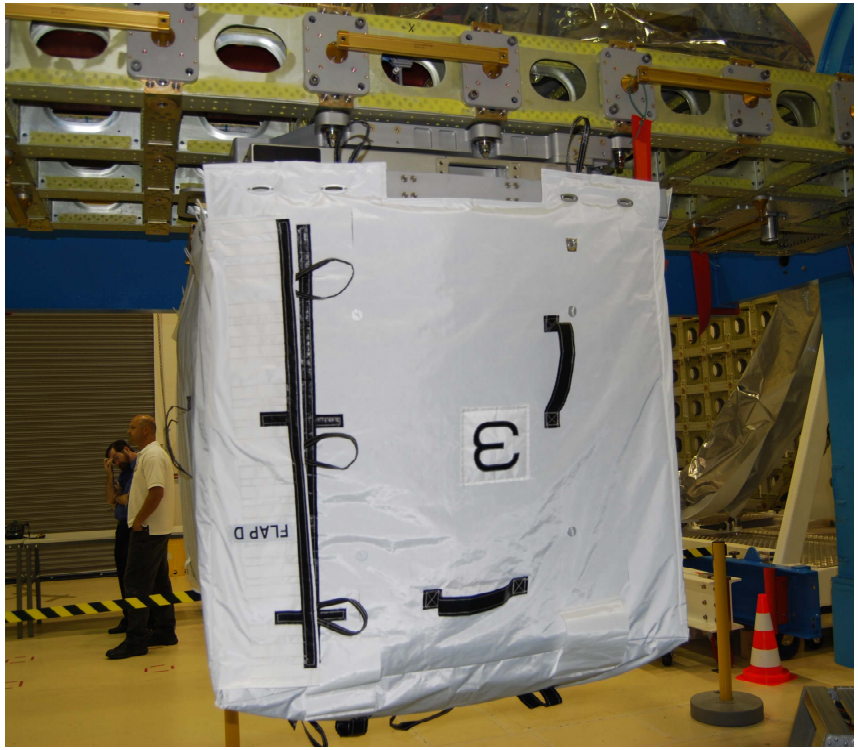

Aft (Fluid QD) Side

P1 AFT SHROUD

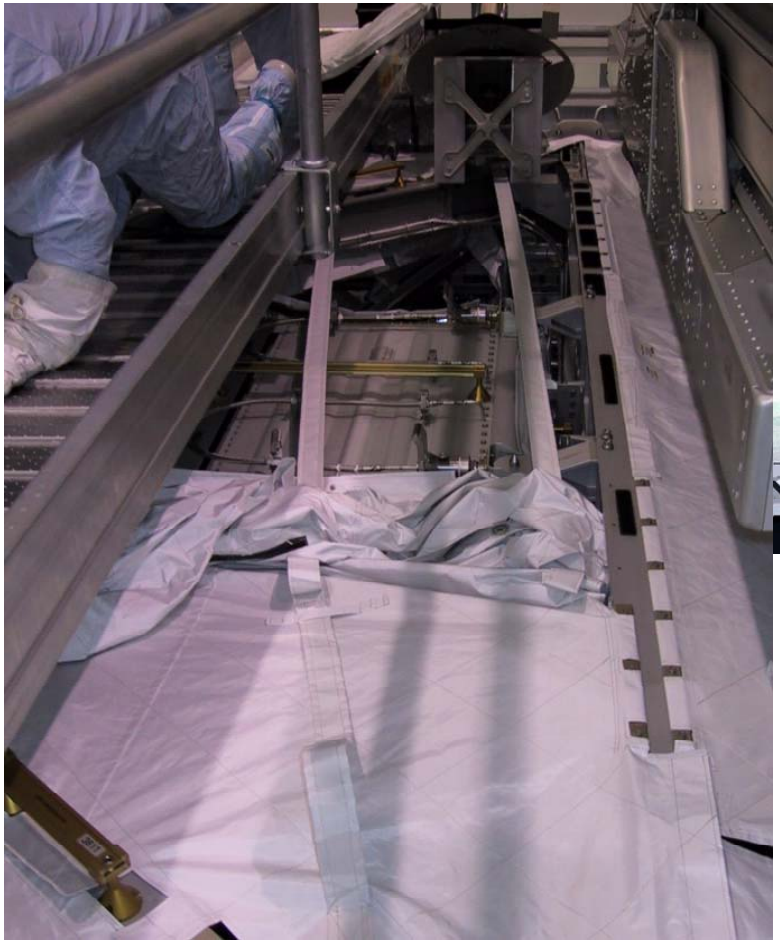

Shroud Opening (zenith looking nadir)

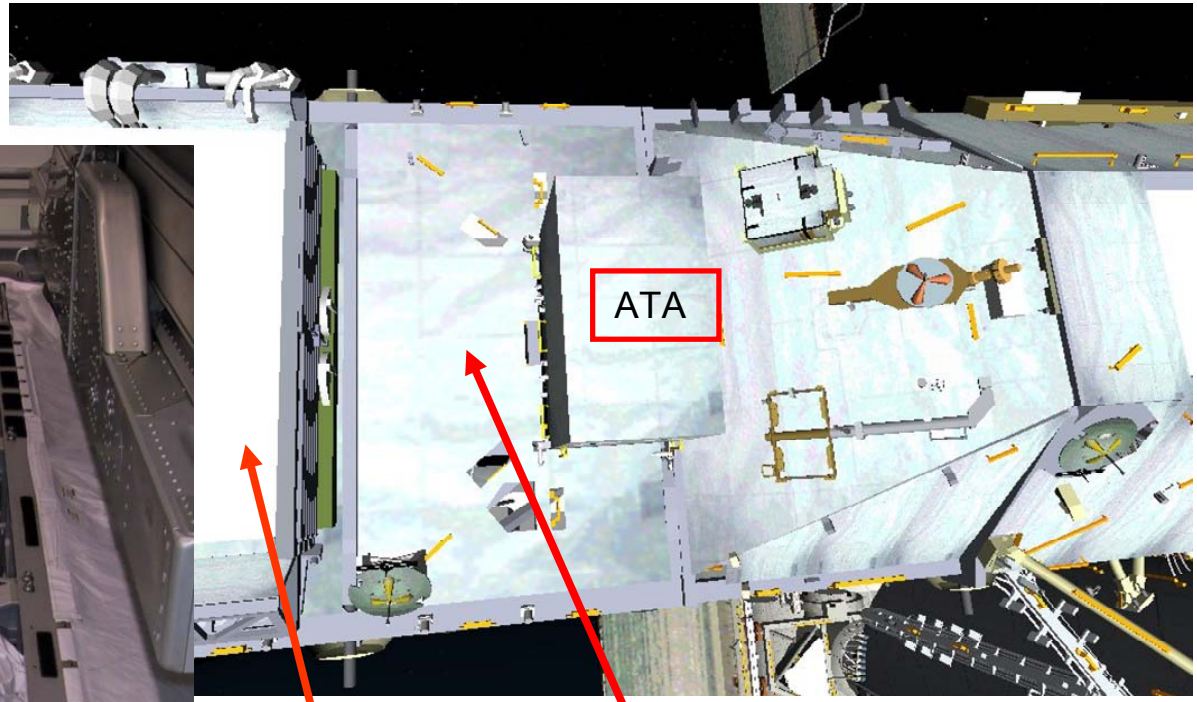

Radiator Beam

Remove shroud for access to NTA N2 lines

Shroud Location

(aft side of P1 Face-4)

SOFT DOCK MECHANISM

Micro-conical (out of picture)

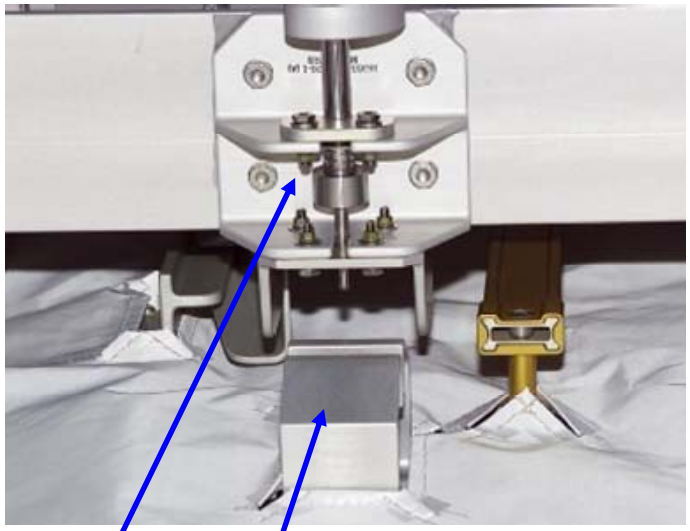

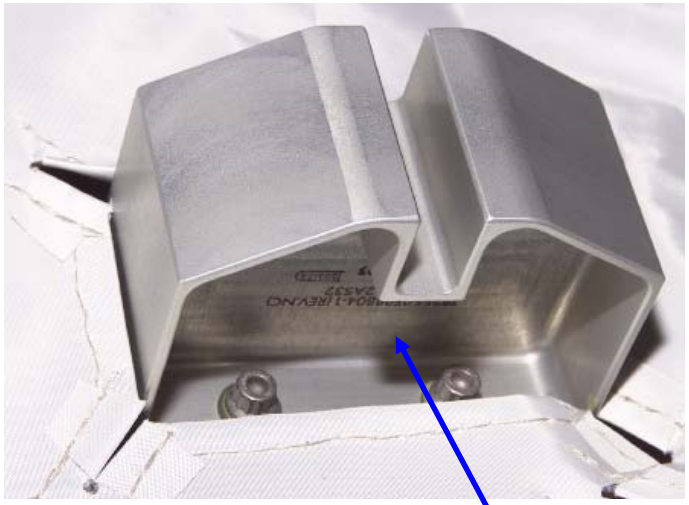

Soft dock bracket

Soft dock mechanism

Soft dock bracket

Location of soft dock mechanism

SOFT DOCK MECHANISM (Cont)

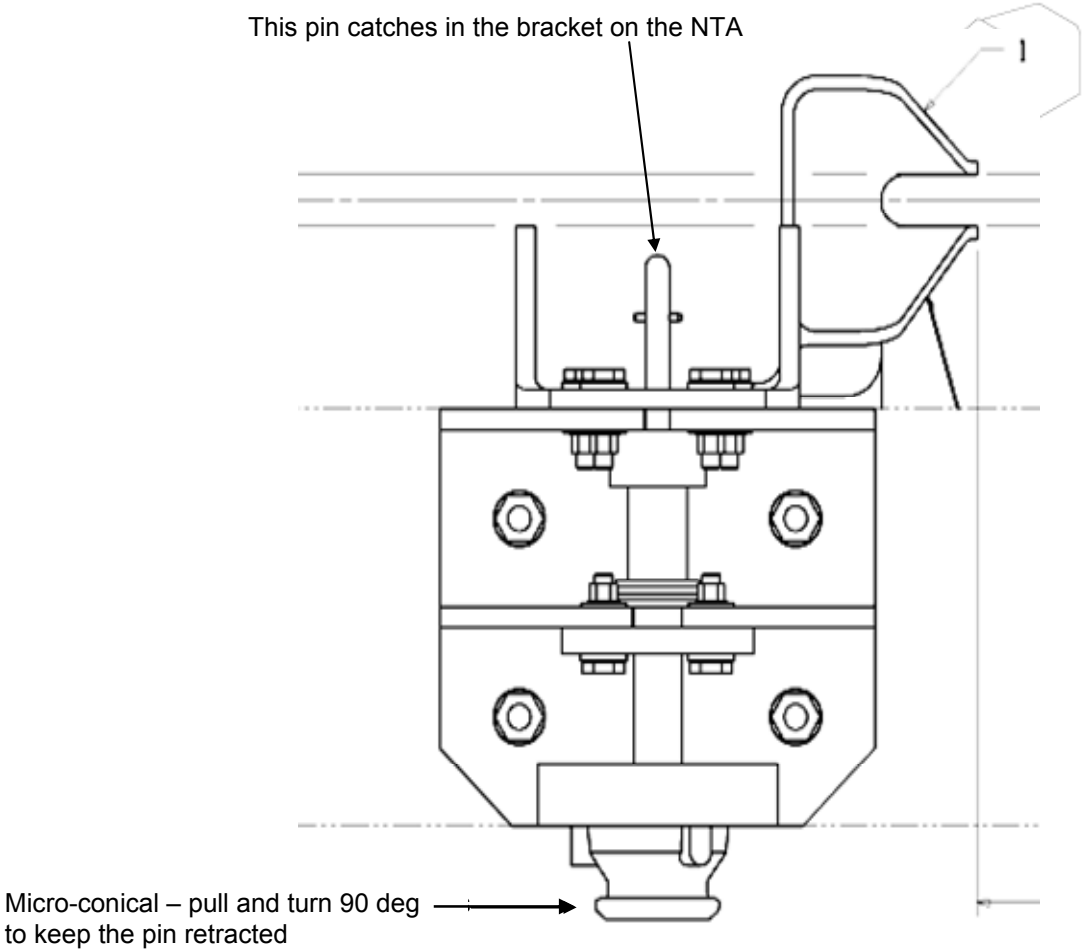

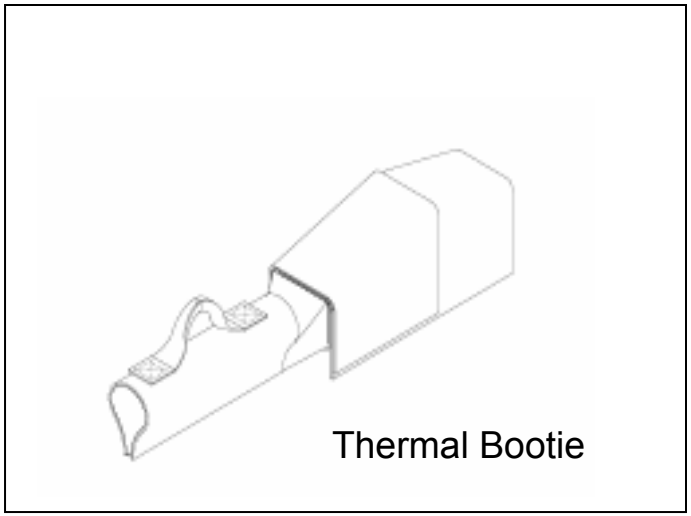

OTSD

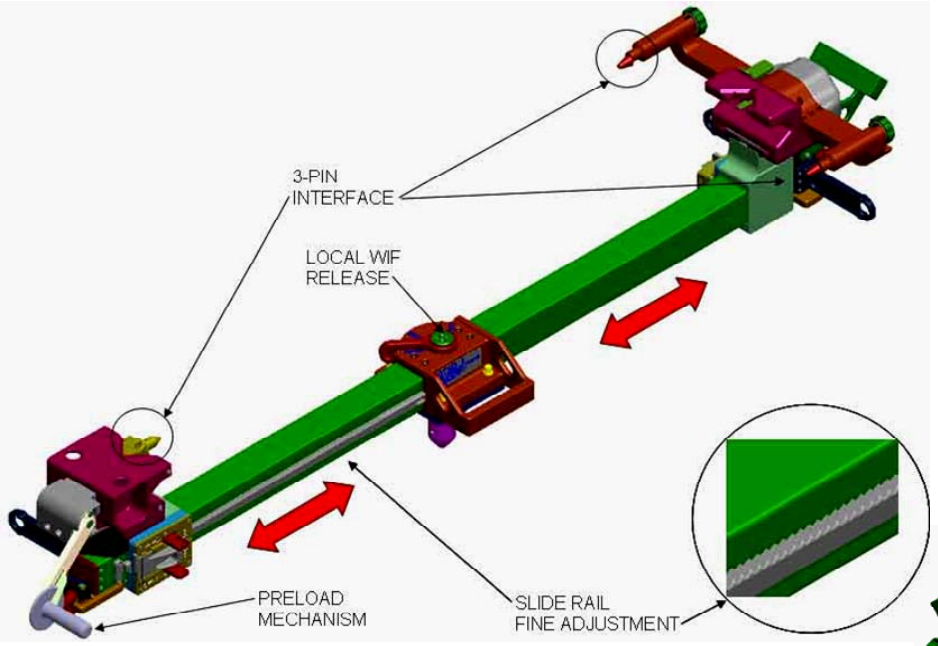
3-PIN
INTERFACE
LOCAL WIF
RELEASE
PRELOAD
MECHANISM
SLIDE RAIL
FINE ADJUSTMENT

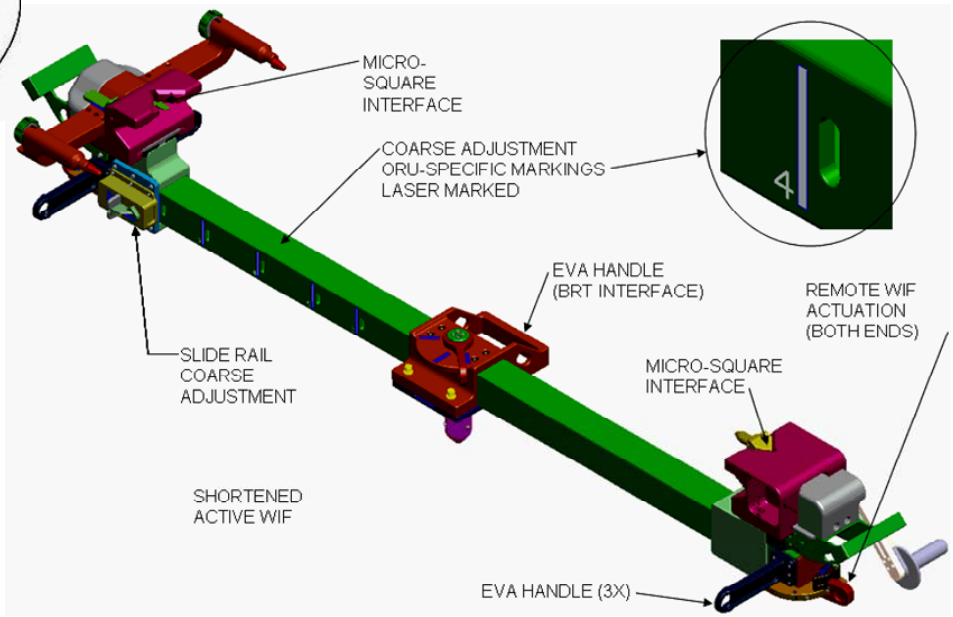
MICRO-
SQUARE
INTERFACE
COARSE ADJUSTMENT
ORU-SPECIFIC MARKINGS
LASER MARKED
4
EVA HANDLE
(BRT INTERFACE)
REMOTE WIF
ACTUATION
(BOTH ENDS)
SLIDE RAIL
COARSE
ADJUSTMENT
MICRO-SQUARE
INTERFACE
SHORTENED
ACTIVE WIF
EVA HANDLE (3X)

OTSD WIF ACTUATION

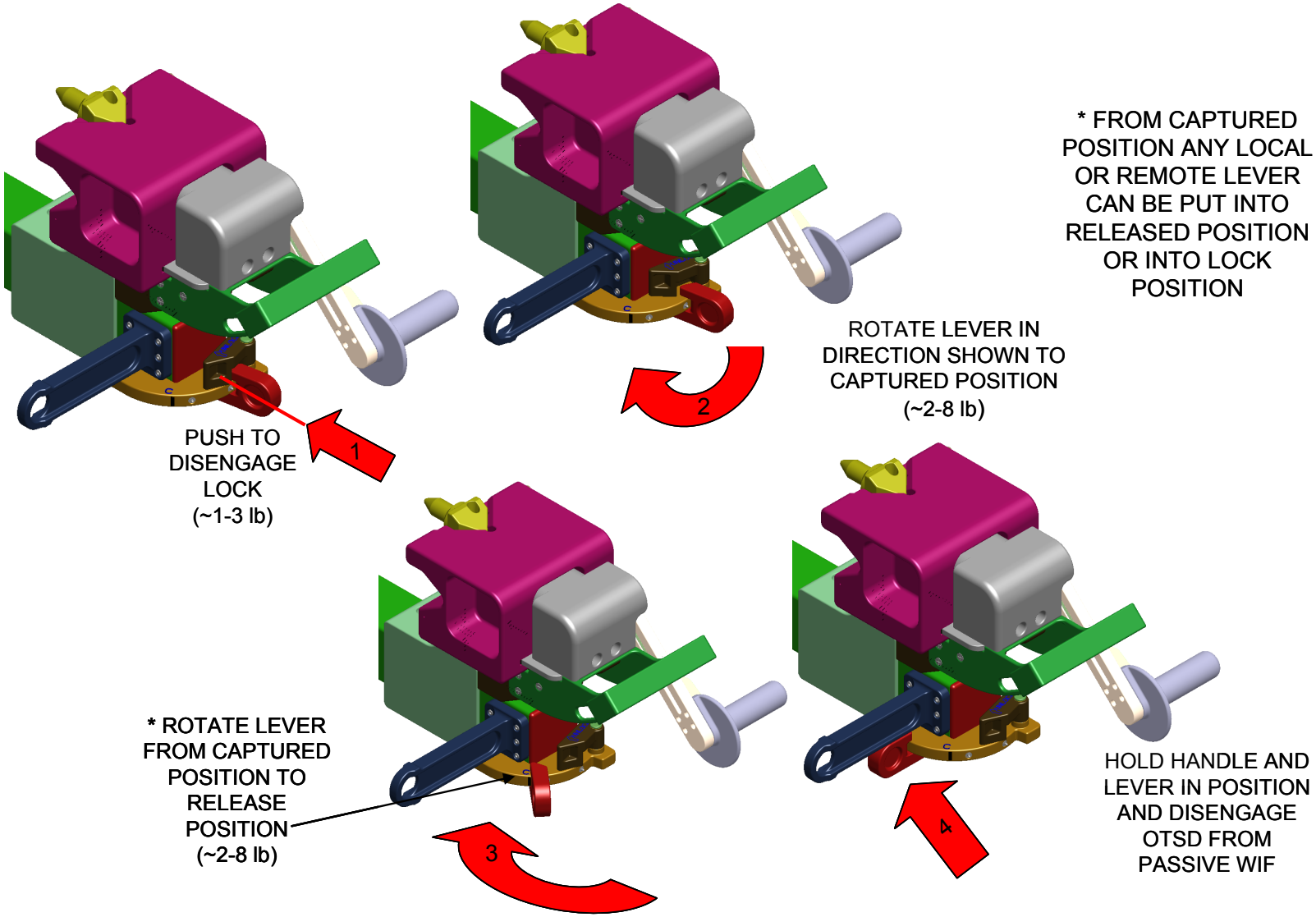

General

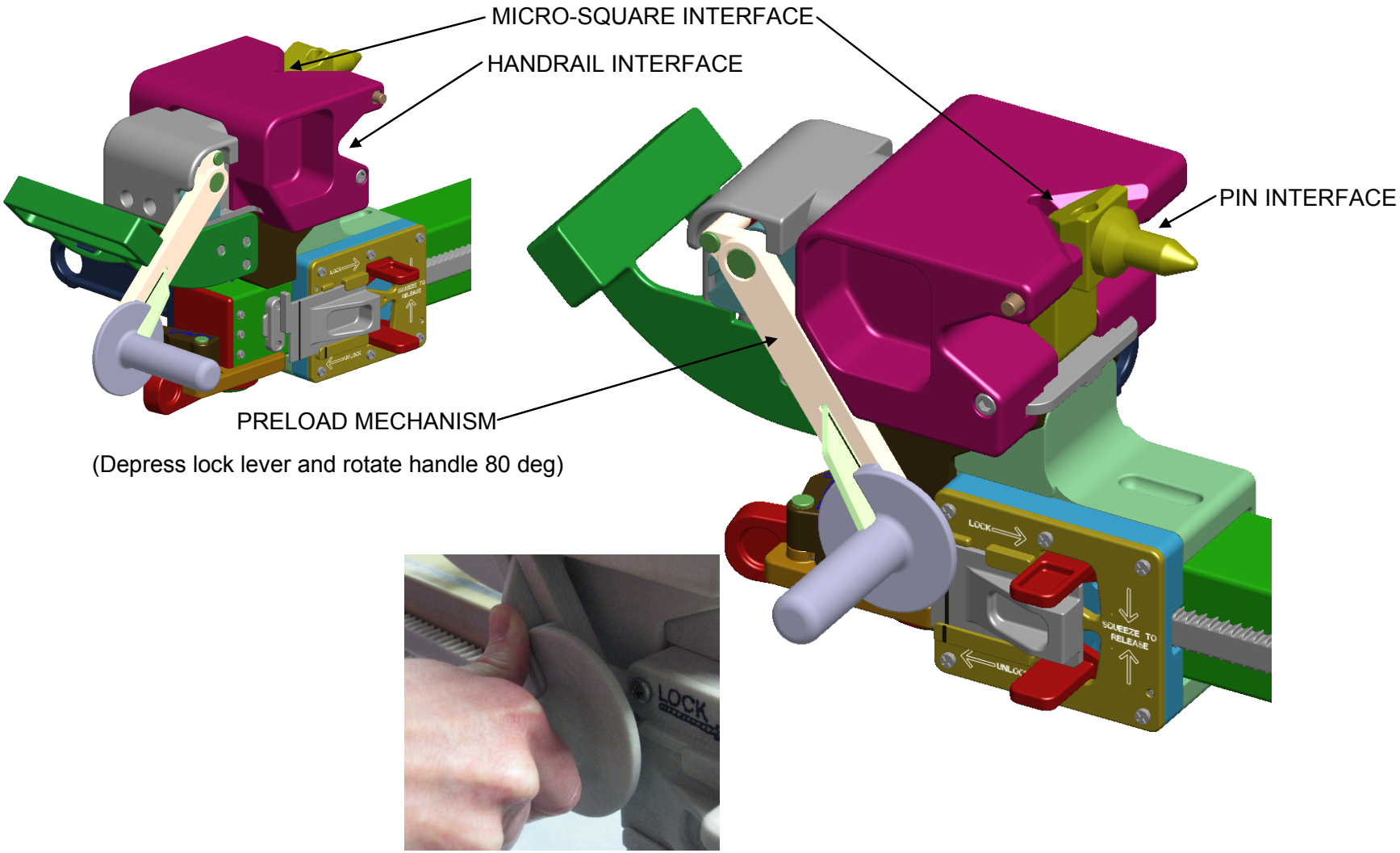
MICRO-SQUARE INTERFACE
HANDRAIL INTERFACE
PIN INTERFACE
PRELOAD MECHANISM
(Depress lock lever and rotate handle 80 deg)
LOCK
SQUEEZE TO RELEASE
UNLOCK

Preload Indicator

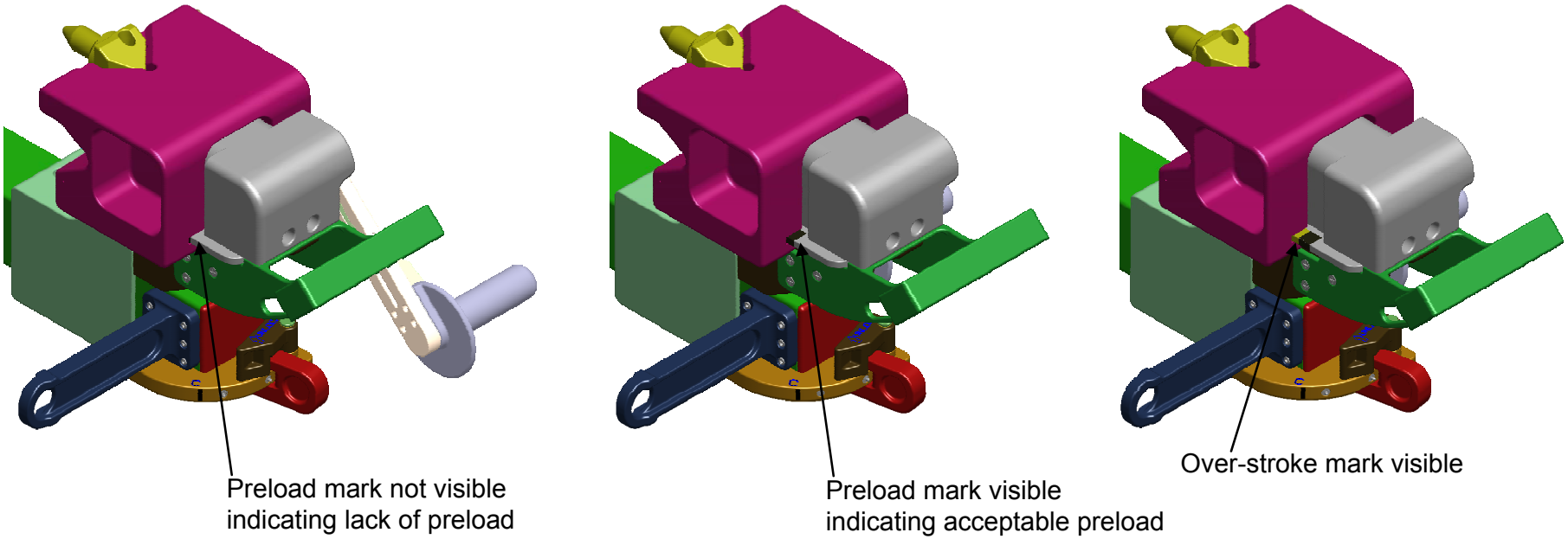

UN-PRELOADED
Belleville Strut uncompressed

PRELOADED
Belleville Strut compressed

OVER-STROKED
Belleville Strut over compressed

OTSD PASSIVE CARRIAGE

General

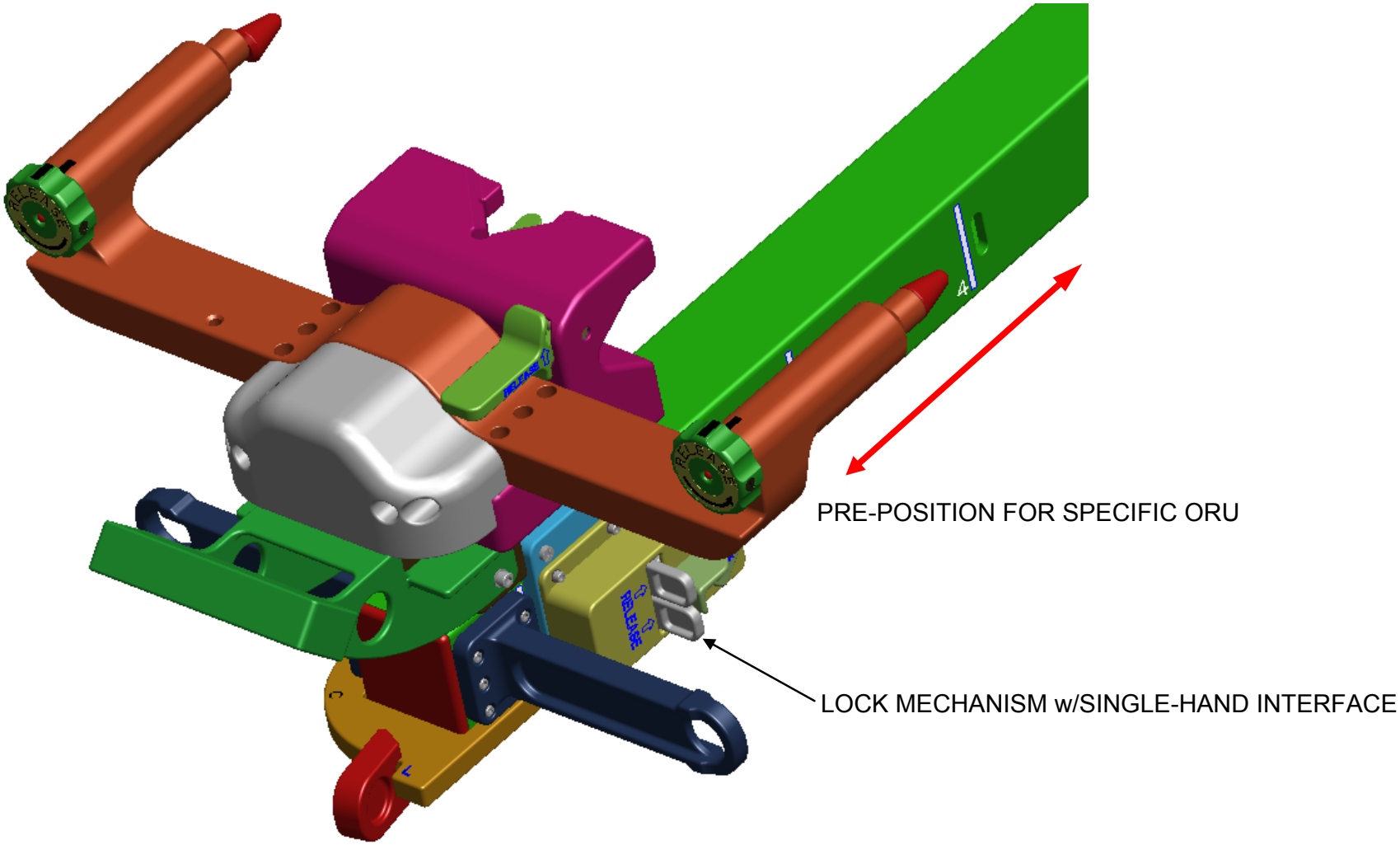

OTSD PASSIVE CARRIAGE DETAILS

Single-Hand Interface

2-pin side in CAPTURE position

2-pin side in RELEASE position

OTSD LABELS

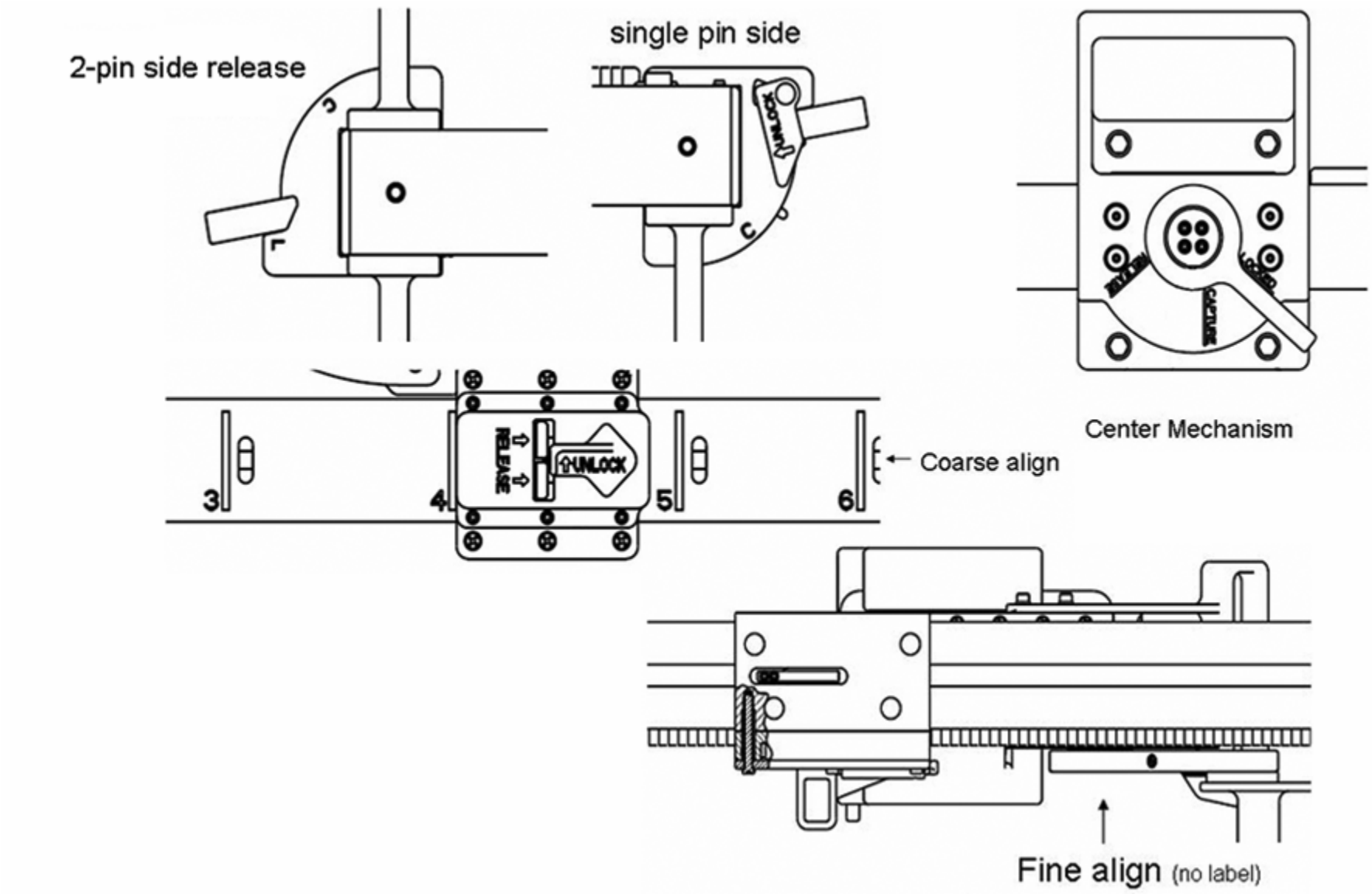
2-pin side release
single pin side
UNLOCK
Center Mechanism
RELEASE
UNLOCK
3
4
5
6
Coarse align
Fine align (no label)

NTA ON CETA

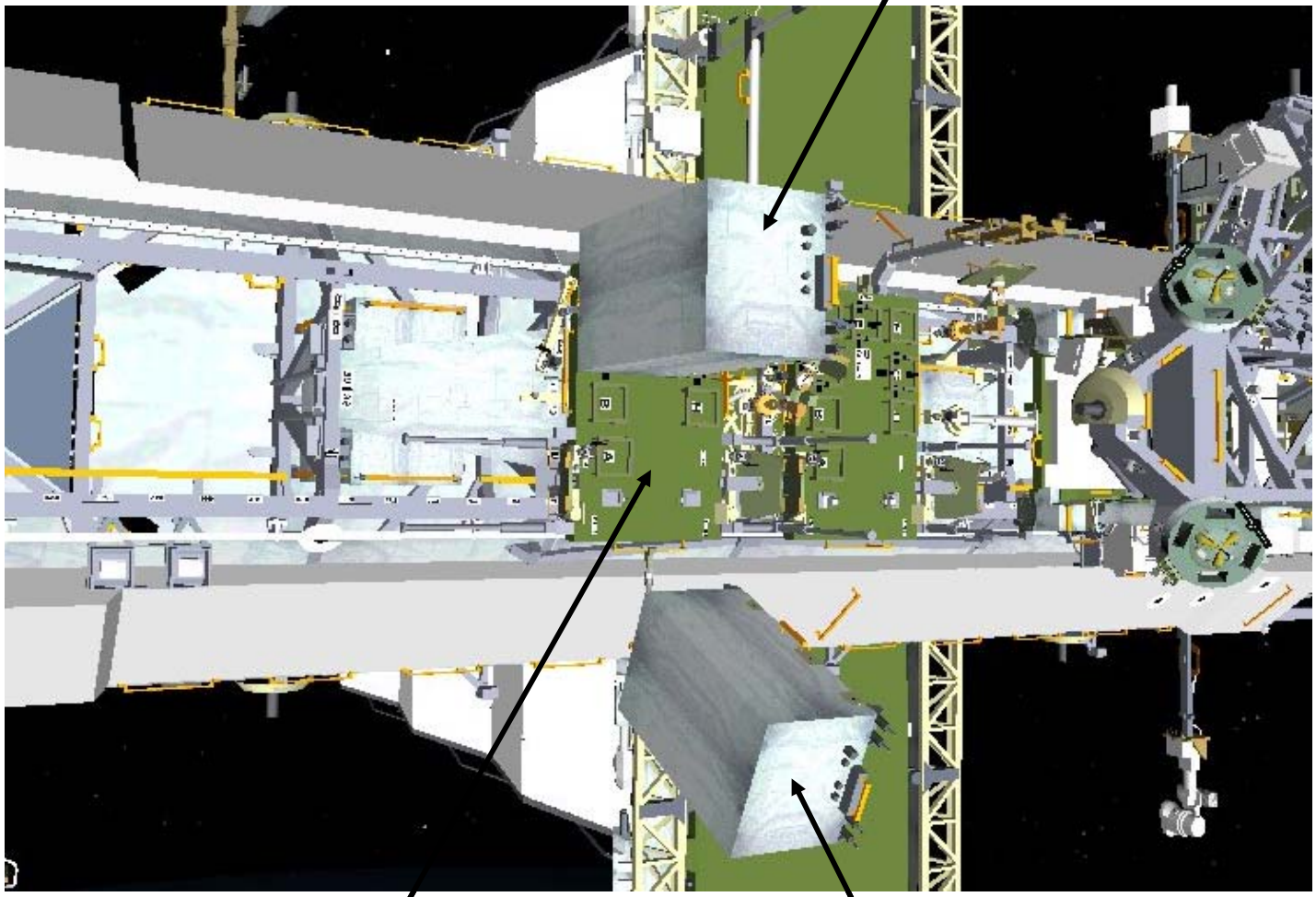

FRAM

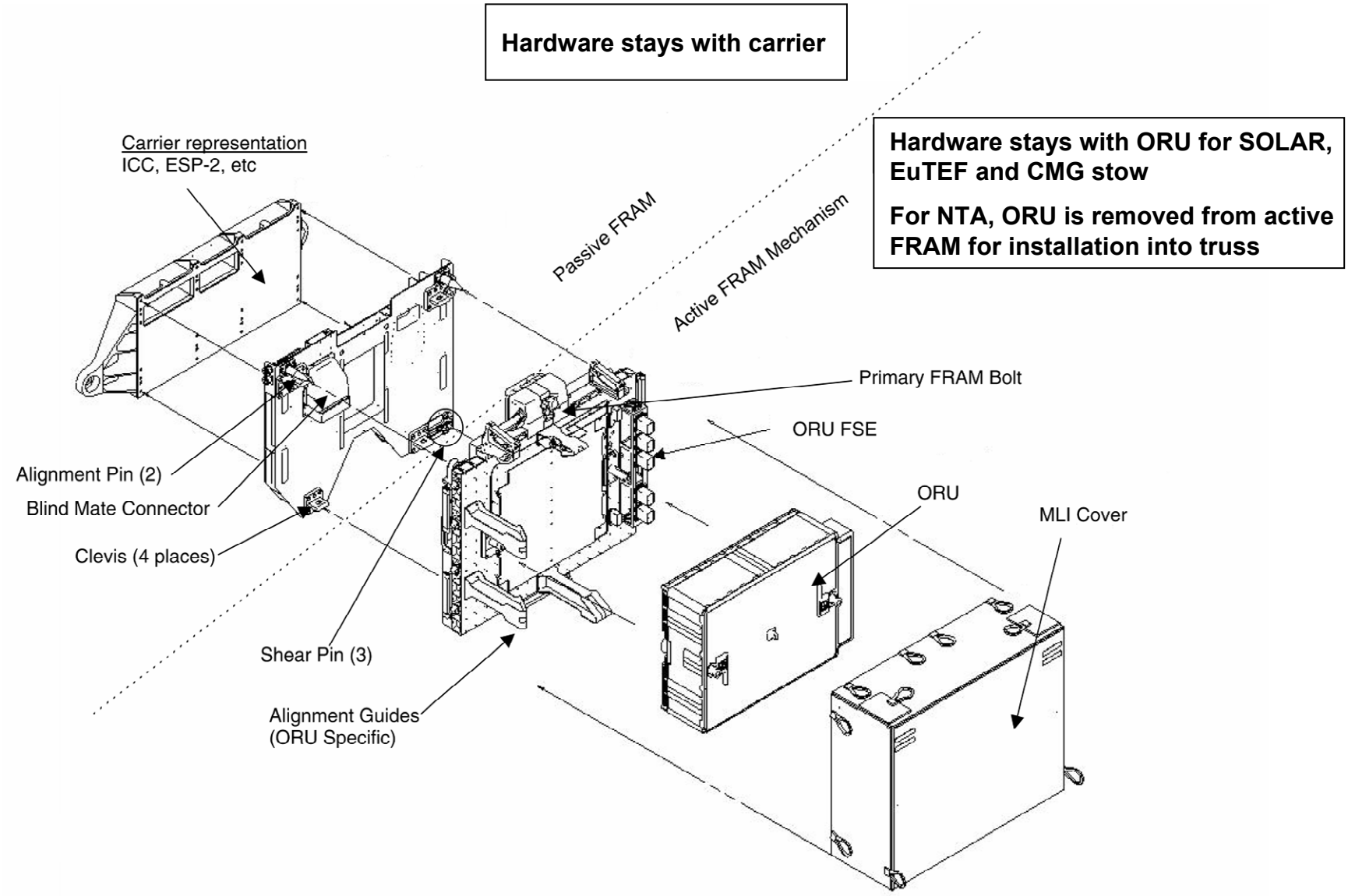
Hardware stays with carrier
Hardware stays with ORU for SOLAR, EuTEF and CMG stow
For NTA, ORU is removed from active FRAM for installation into truss
Carrier representation
ICC, ESP-2, etc
Passive FRAM
Active FRAM Mechanism
Primary FRAM Bolt
ORU FSE
ORU
MLI Cover
Alignment Pin (2)
Blind Mate Connector
Clevis (4 places)
Shear Pin (3)
Alignment Guides
(ORU Specific)

FRAM (Cont)

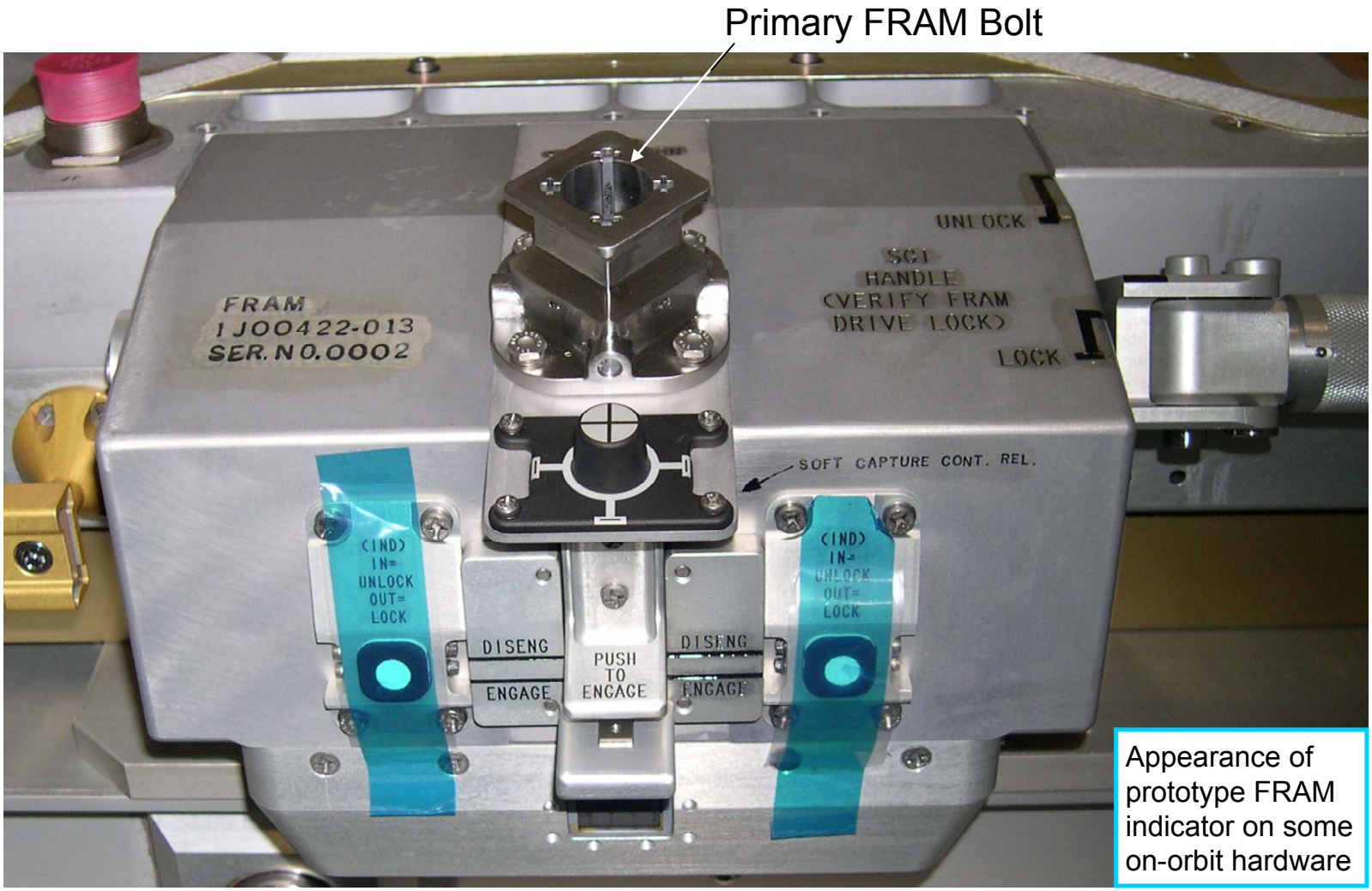

Appearance of prototype FRAM indicator on some on-orbit hardware

NOTE: On Primary FRAM indicator, “OUT” (mated) is extended 1/8 inch. “IN” (not mated) is flush with the surrounding box

Underside of Active FRAM (without covering)

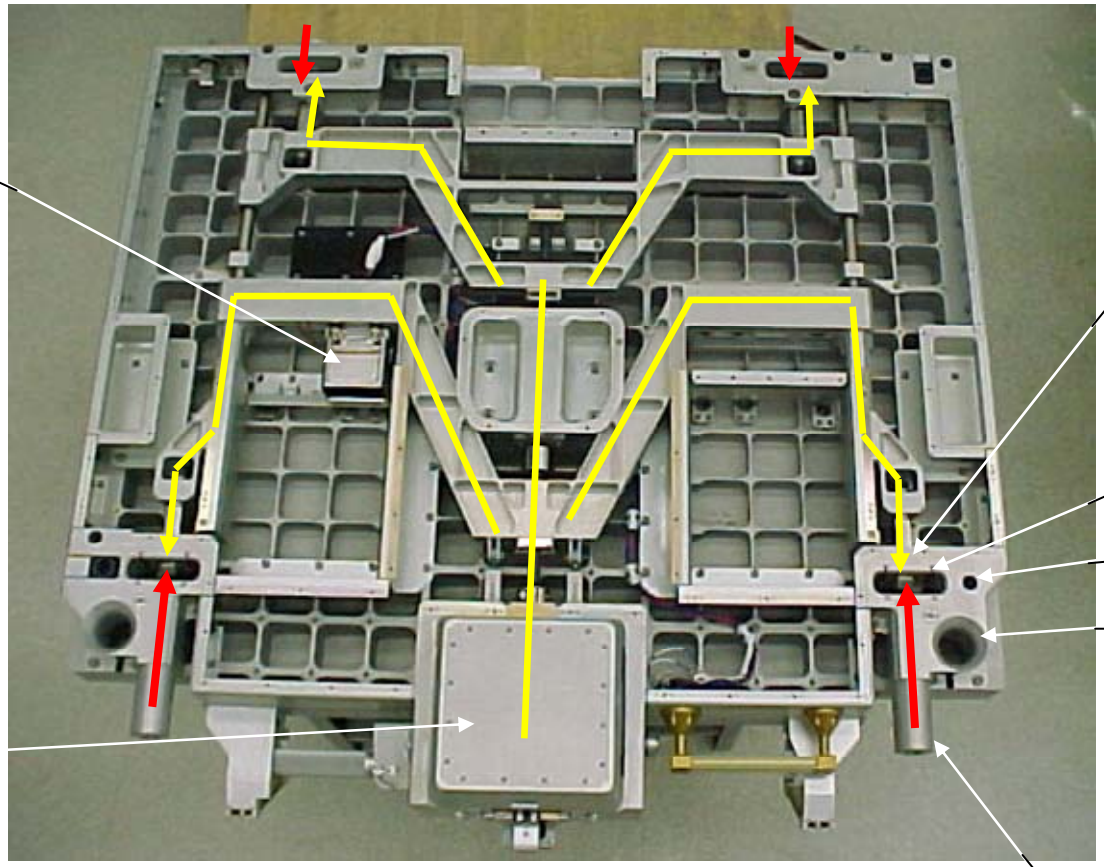

FRAM (Cont)

Passive FRAM (top side)

Blind Mate Connector w/hinged cover

Clevis

Alignment Pin

Shear Pin

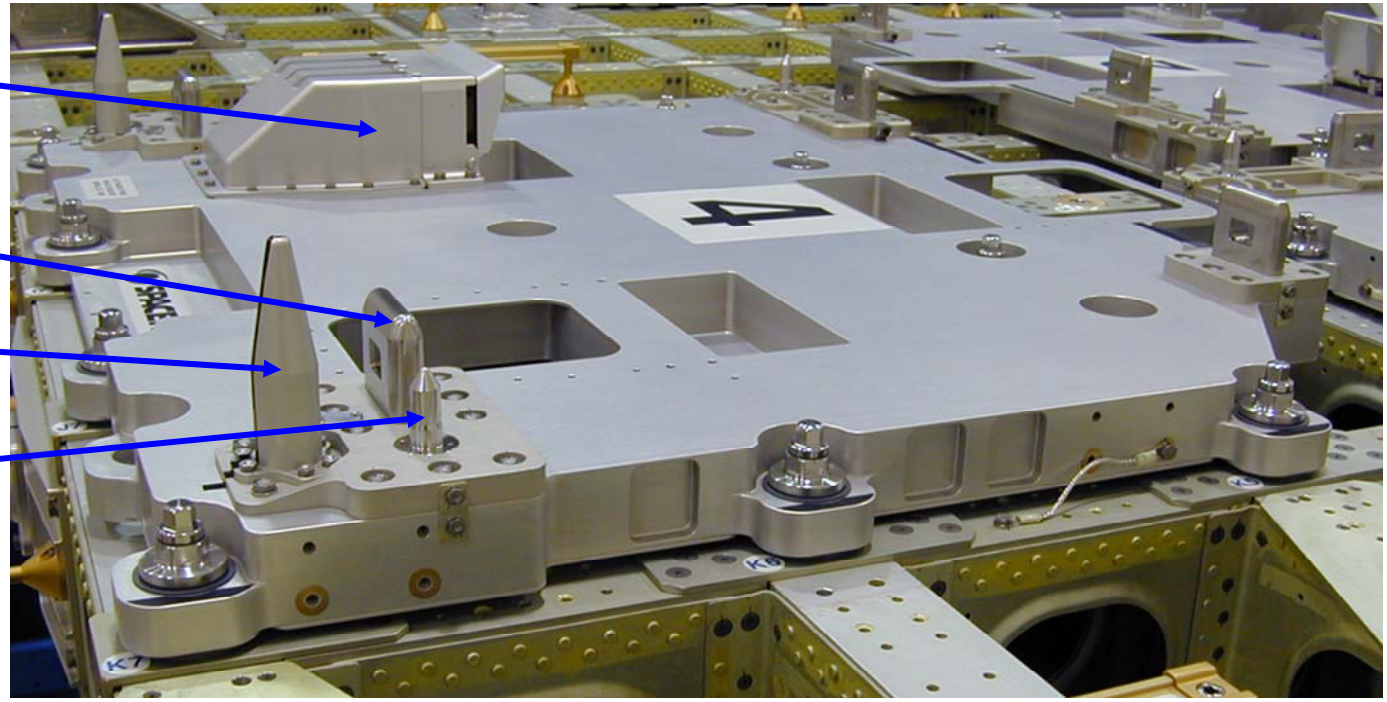

Active FRAM (Top Side, Front)

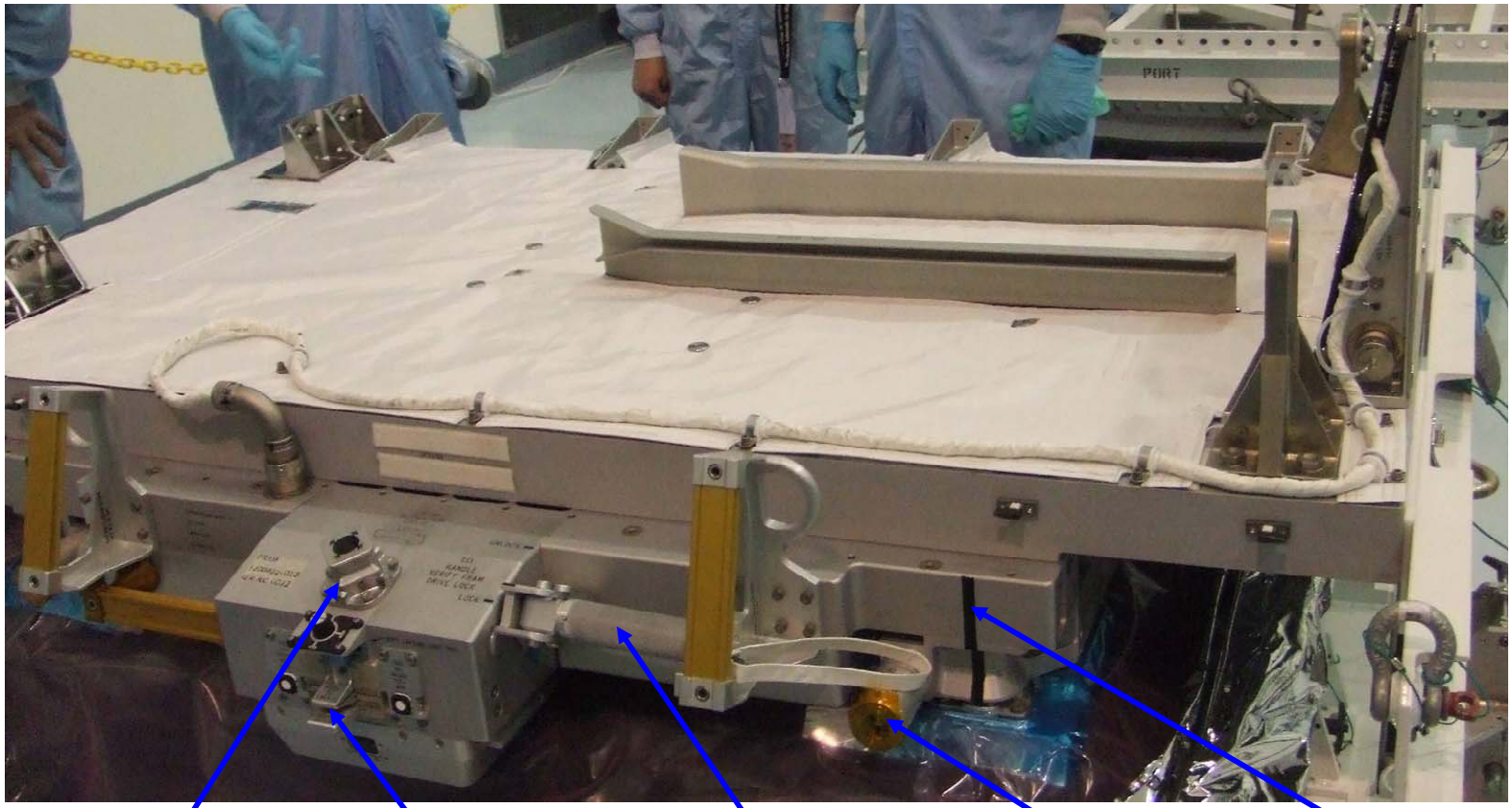

Primary FRAM Bolt inside Micro-square

Soft Capture Handle and Mechanism

SGI Contingency Release handle

Contingency Pin Bolt Interface

Alignment Stripe

SAPA (used with CMG and NTA) Backside Contingency Pins

NOTE: The 2 ESA PLs use CEPAs. The CMG and NTA each use a SAPA.
All have installable rear contingency pins

SOLAR

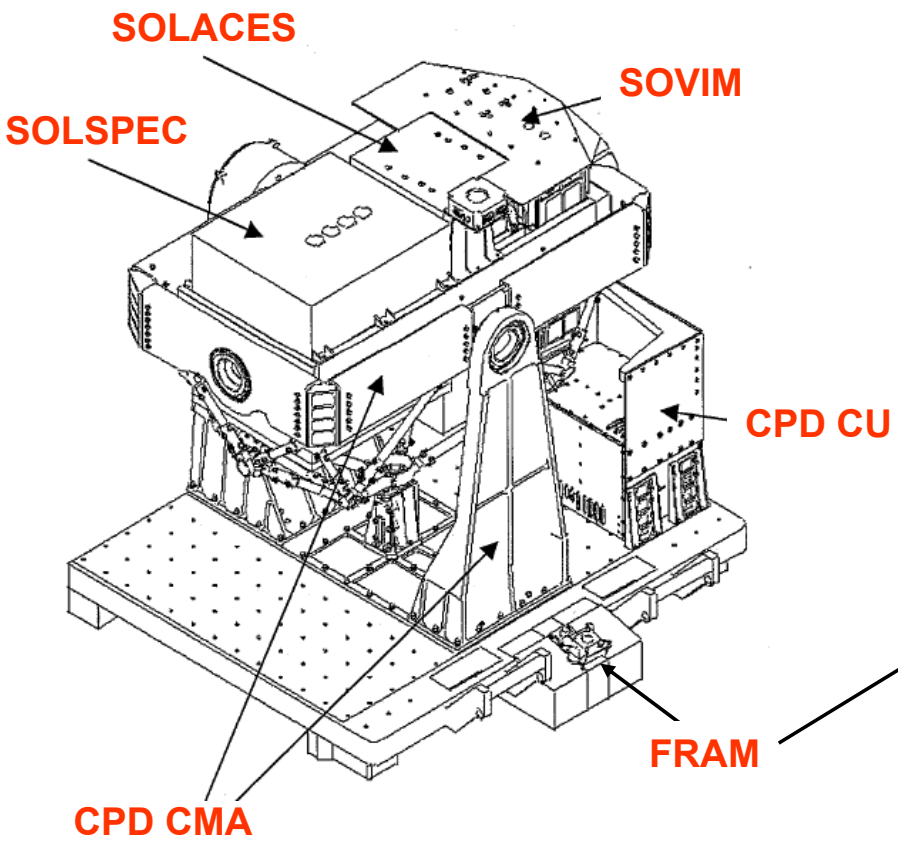

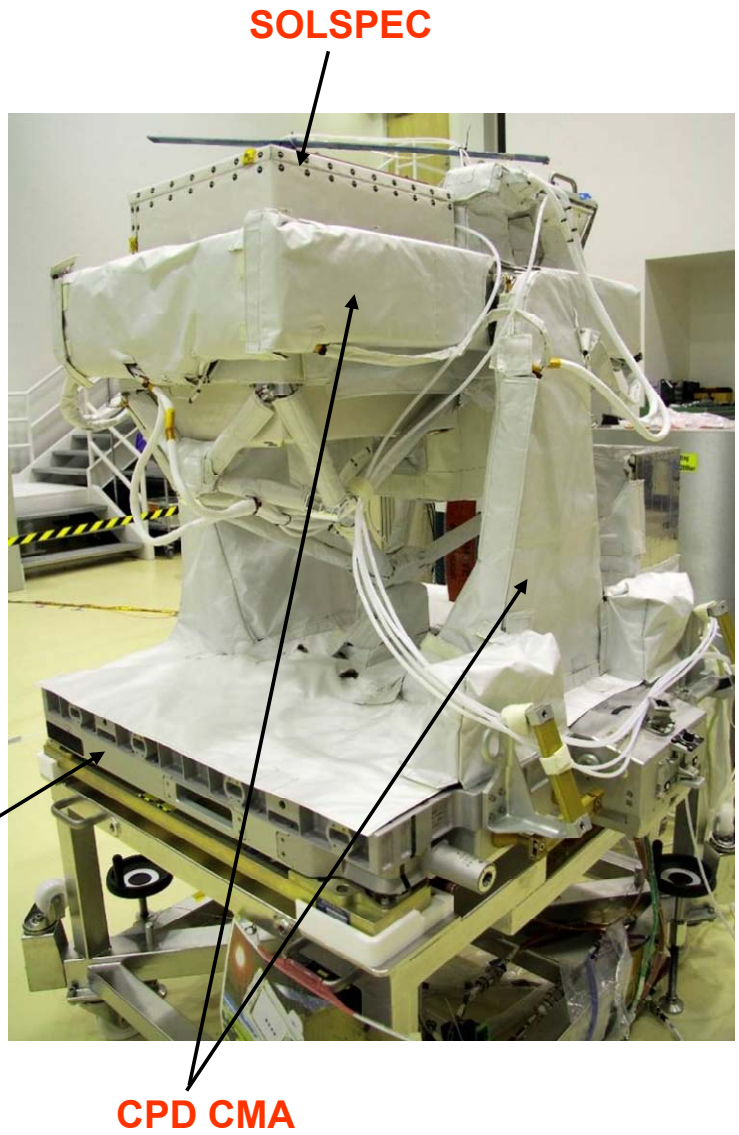

SOLAR CAUTION AREAS

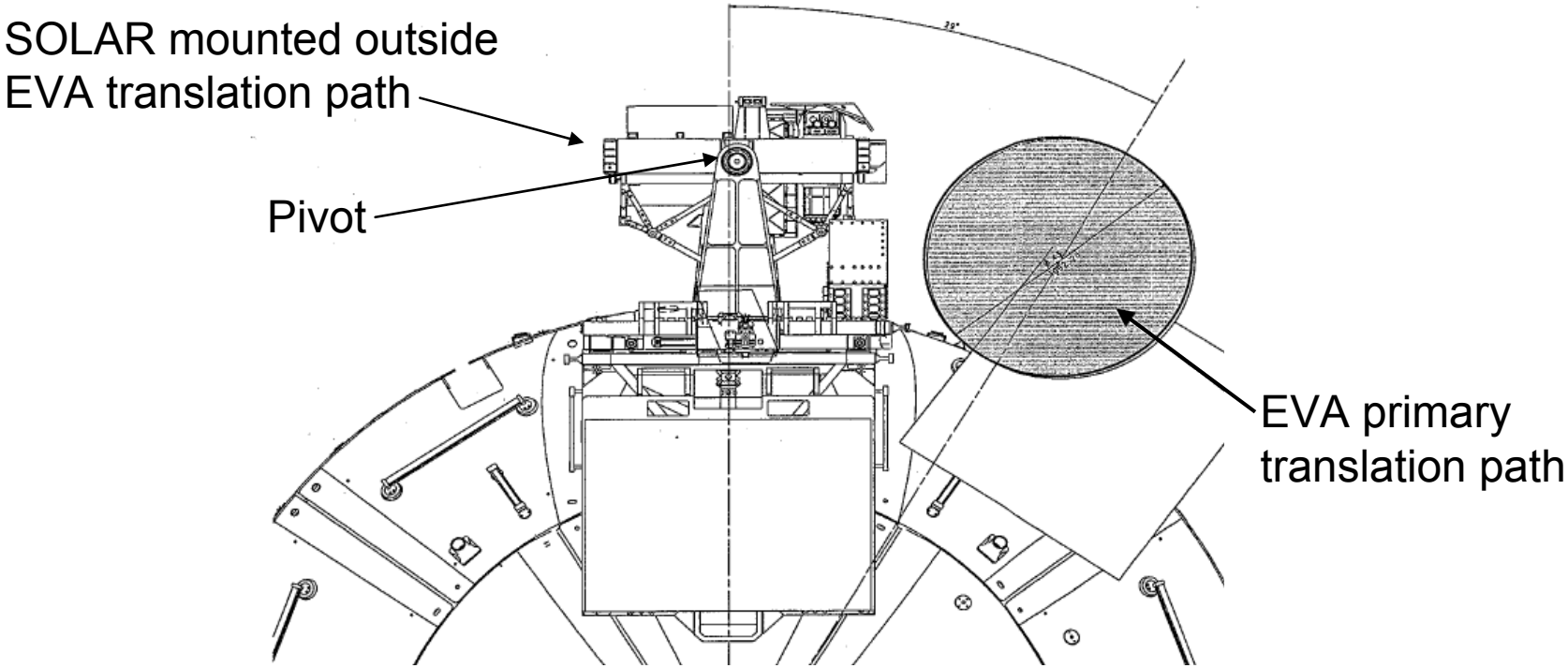

<u>NOTE</u>: No SOLAR hazards during installation. After installation, SOLAR is outside EVA translation paths. However, if needed, SOLAR pointing motion can be stopped with finger pressure and modes to free float after 5-10 sec of stalled motion to mitigate entrapment hazard due to pivoting

EUROPEAN TECHNOLOGY EXPOSURE FACILITY (EuTEF)

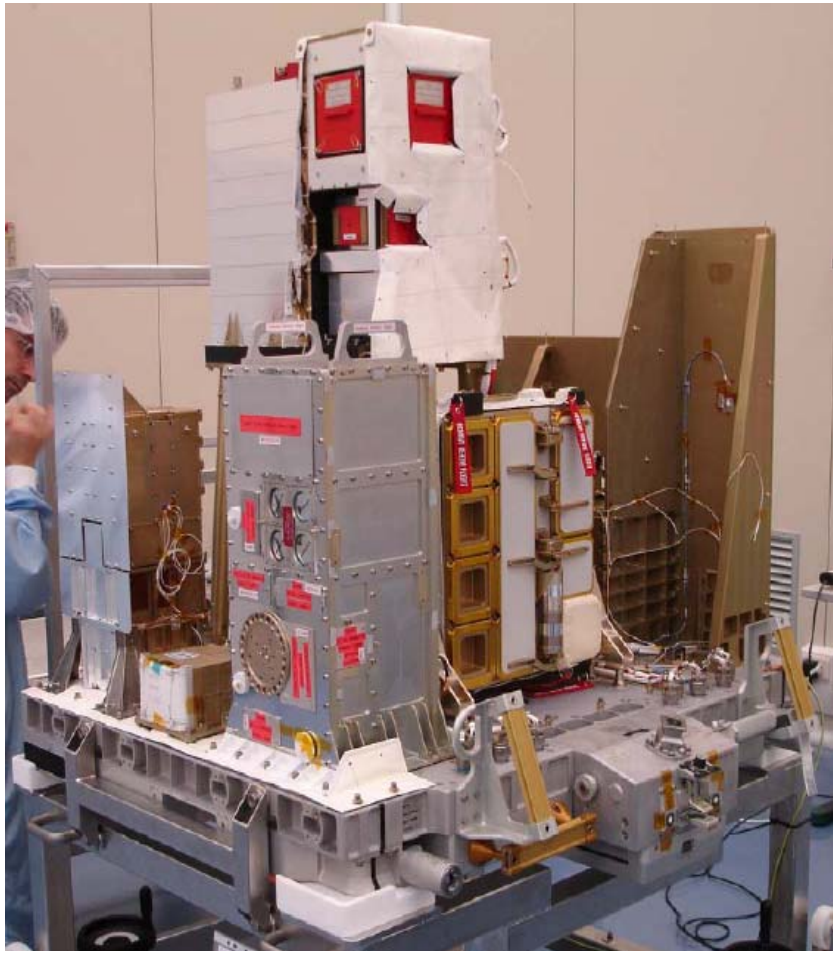

Front View

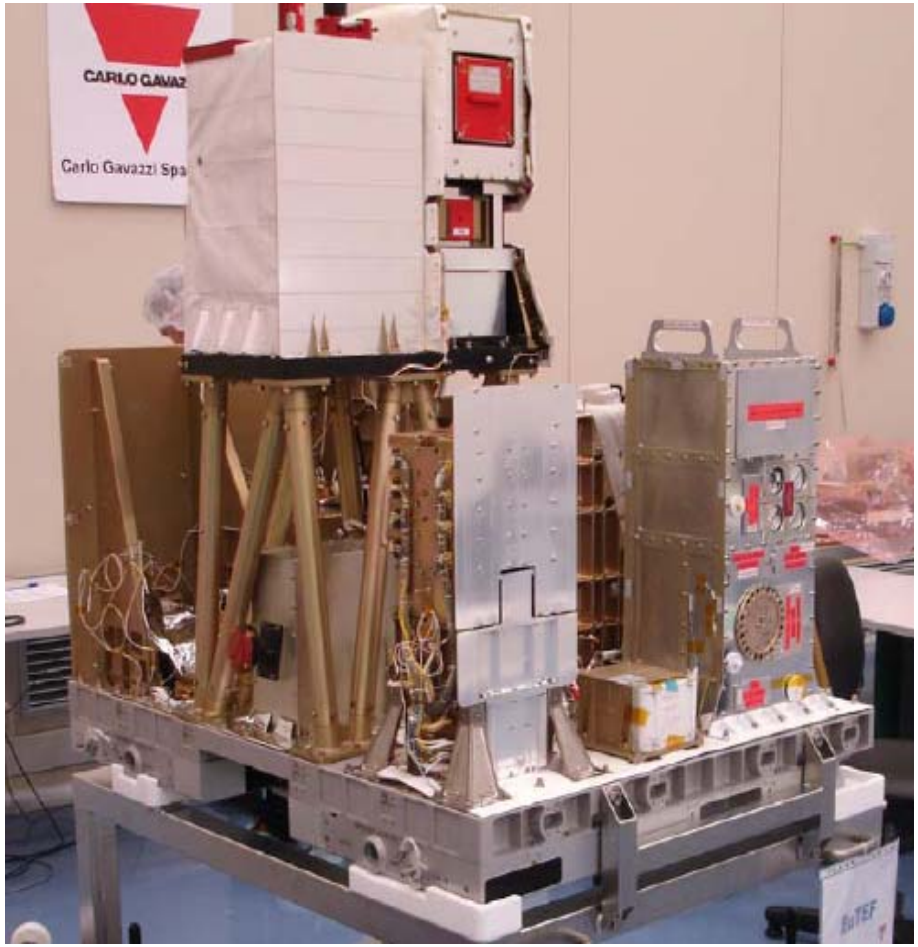

Back View

EuTEF KEEP-OUT AREAS

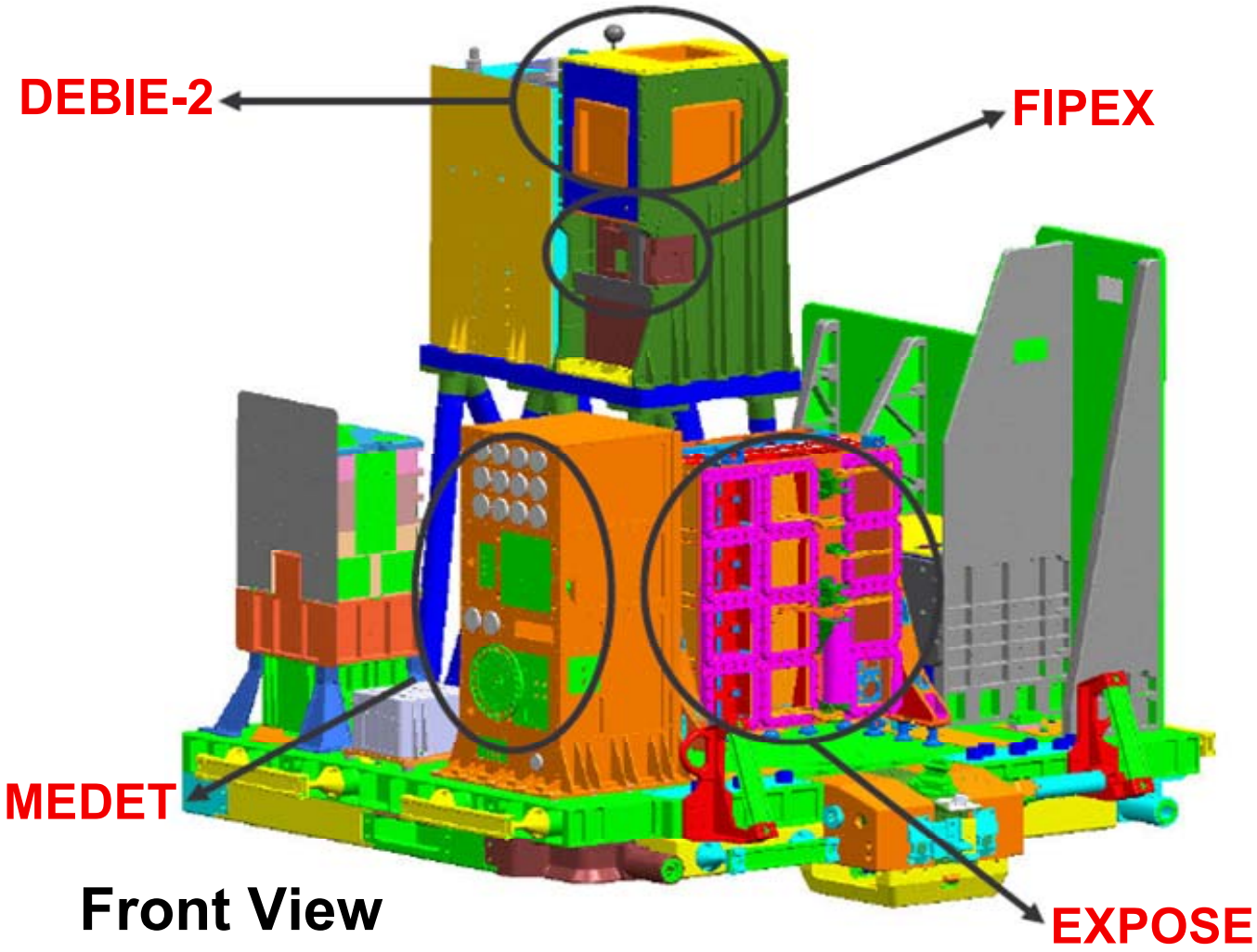

Front View

EuTEF KEEP-OUT AREAS (Cont)

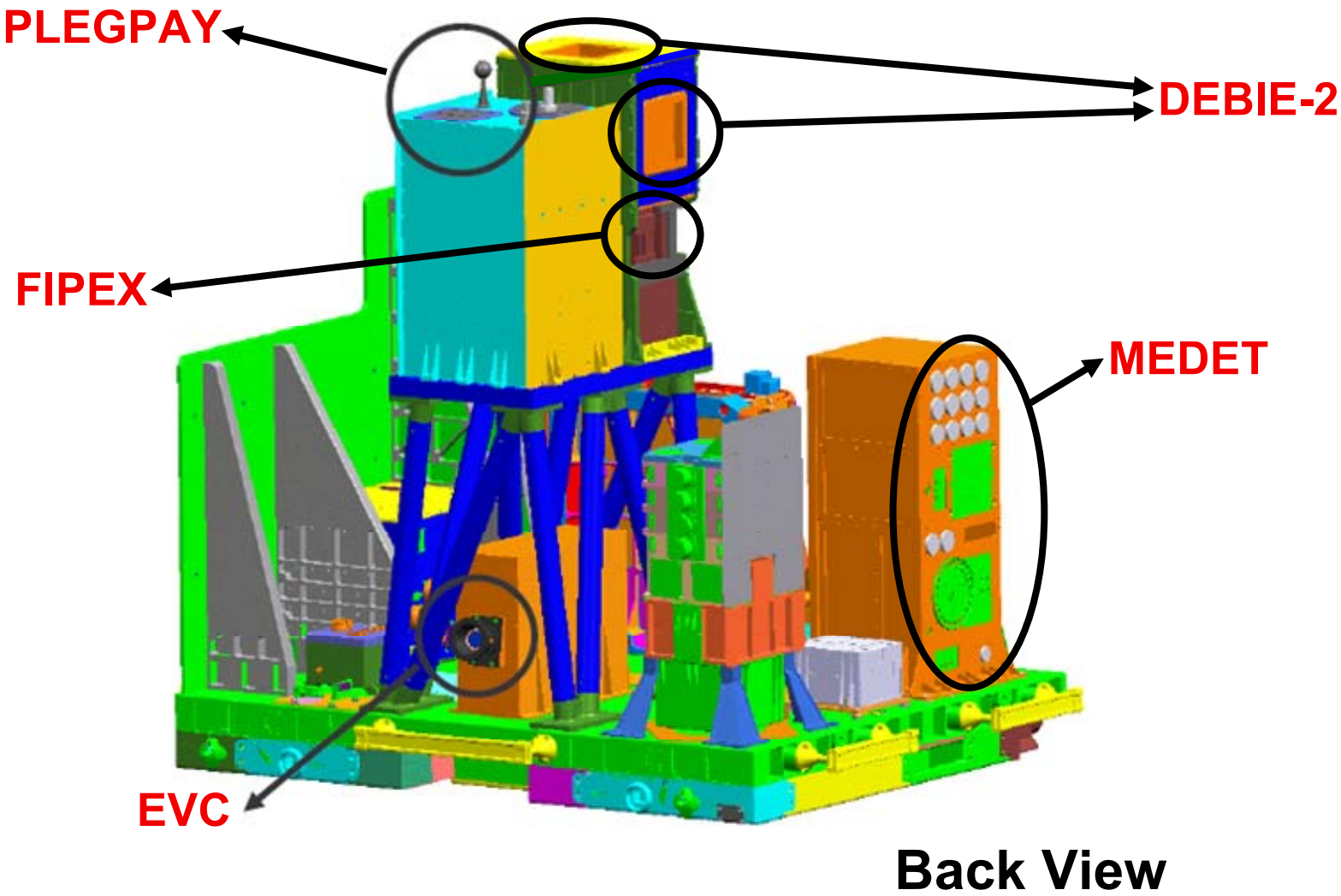

EuTEF HAZARD AREAS

DEBIE-2 Sensors

-potential glove entrapment in wires

-sharp edges if broken

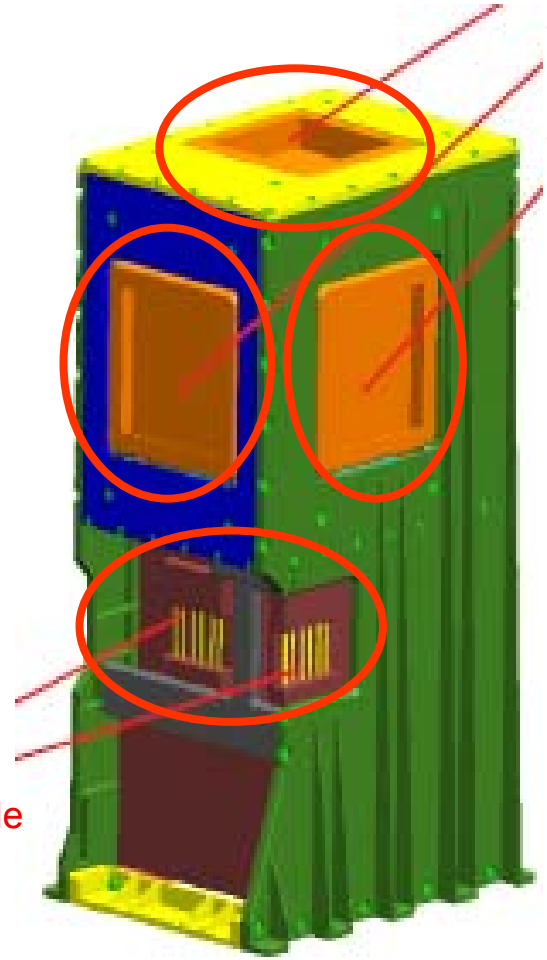

FIPEX Sensors

-shatterable

DEBIE-2 and FIPEX

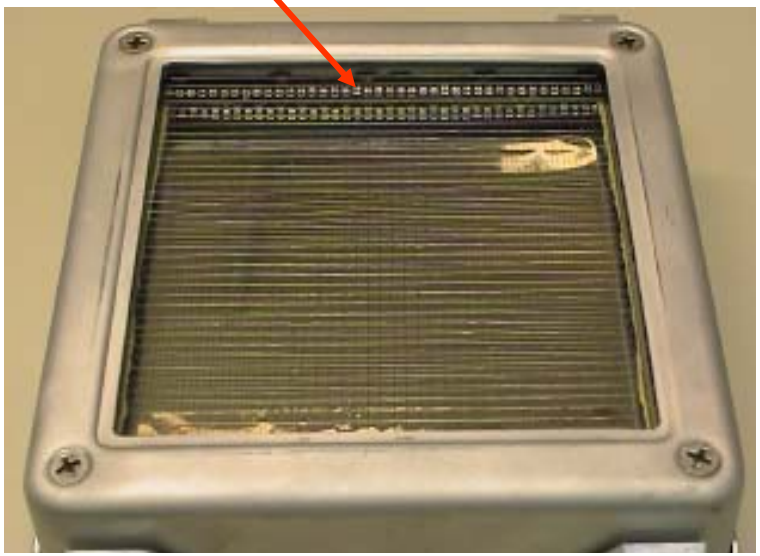

DEBIE-2 Sensor Unit

EuTEF HAZARD AREAS (Cont)

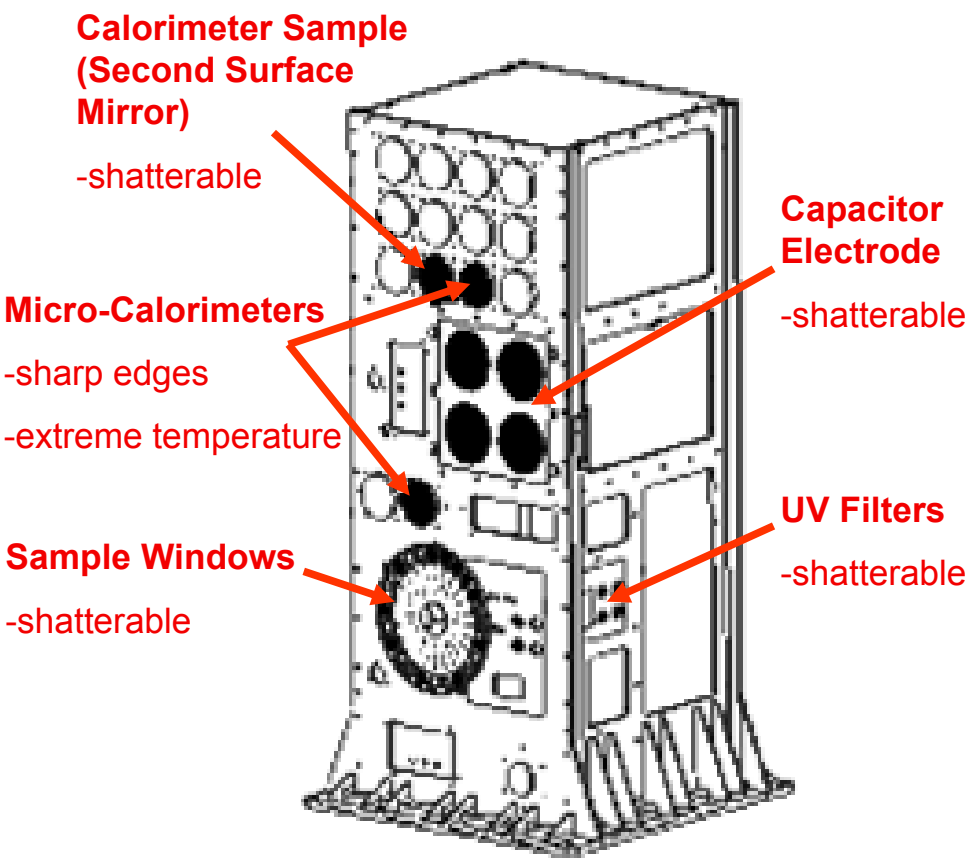

MEDET

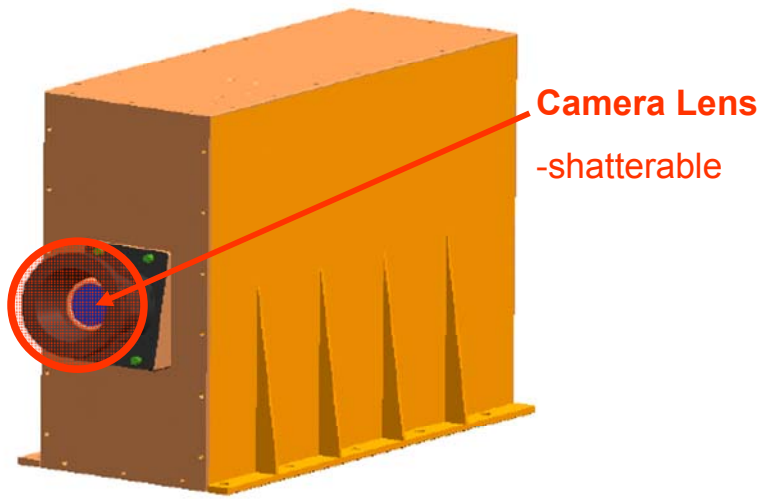

EVC

EuTEF HAZARD AREAS (Cont)

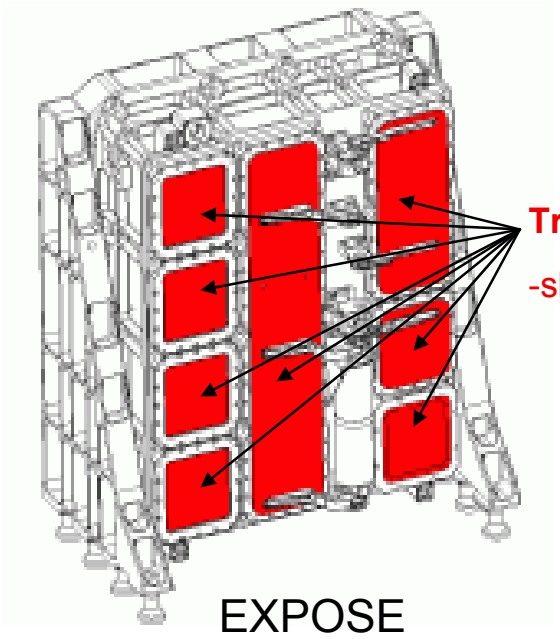

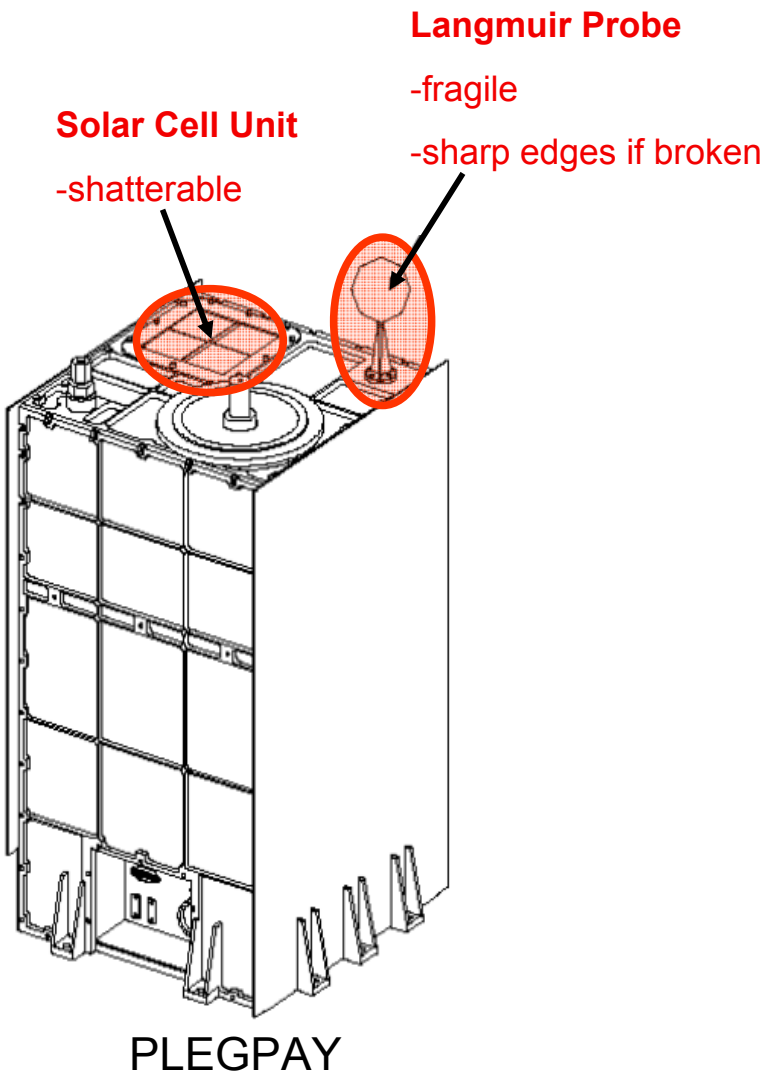

EXPOSED PAYLOAD FACILITY

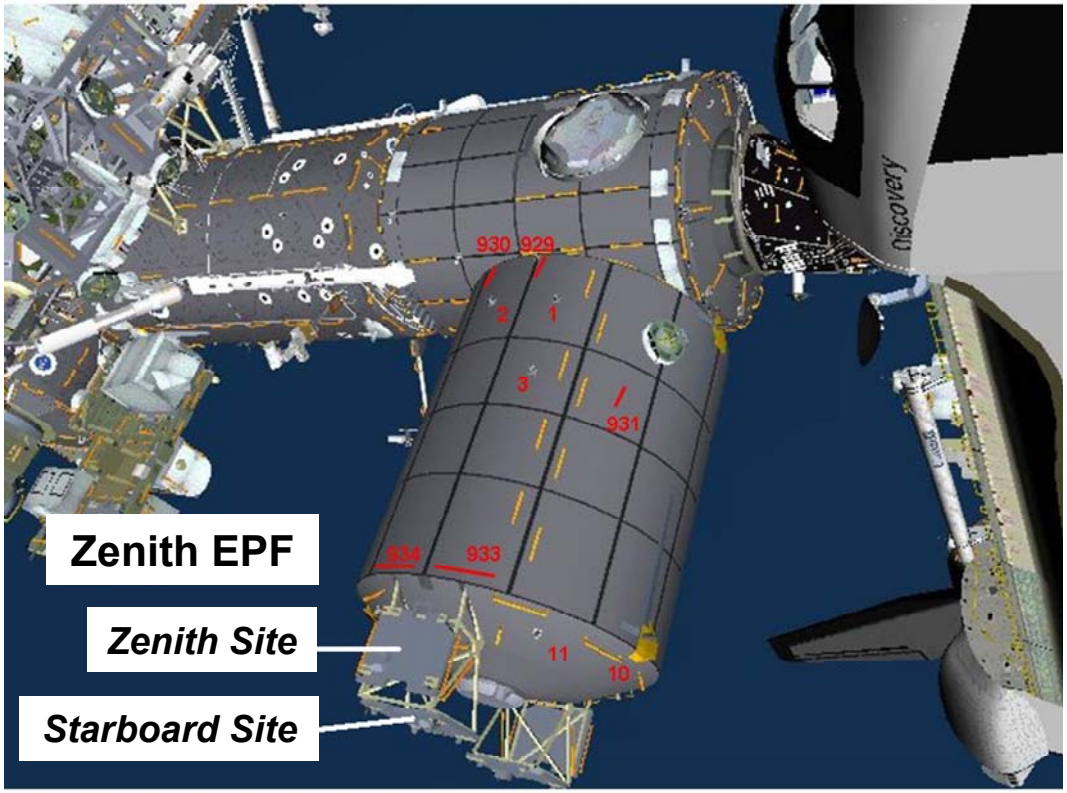

SOLAR installed on Zenith site
EuTEF installed on Starboard site

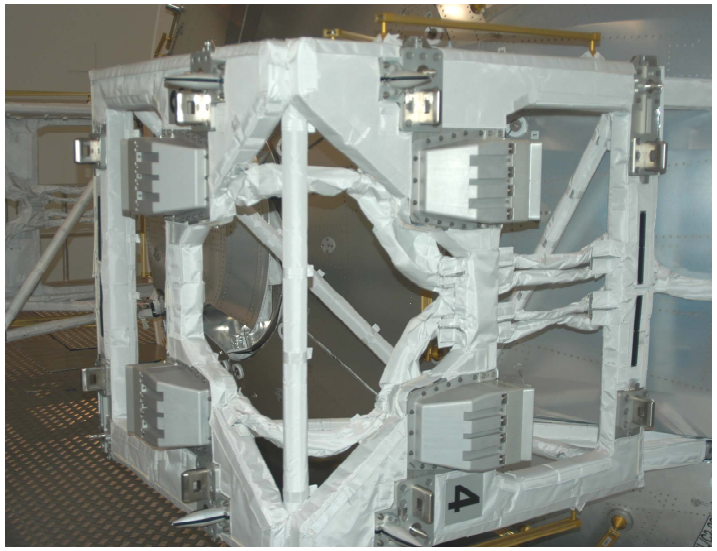

EPF with passive FRAMs

EXPOSED PAYLOAD FACILITY (Cont)

SOLAR install
Zenith EPF site

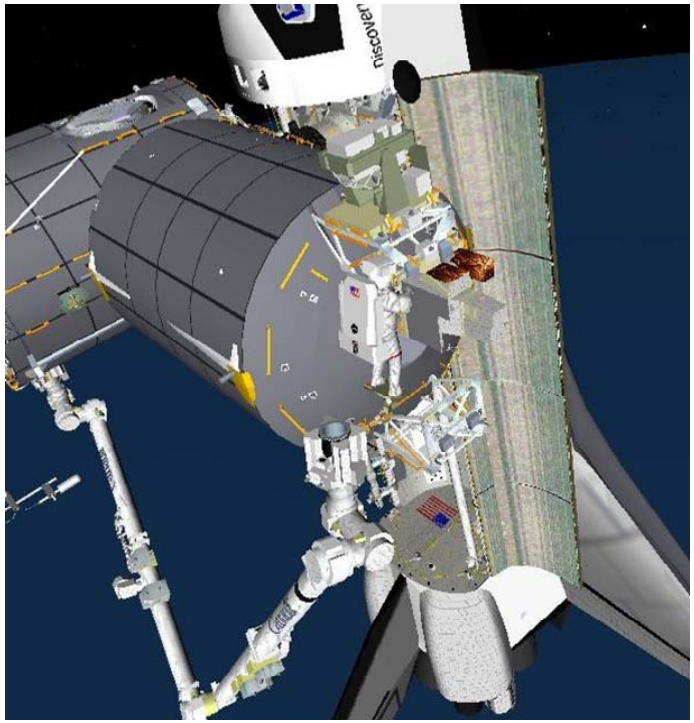

EuTEF install
Starboard EPF site

ON-ORBIT INSTALLED HANDRAIL

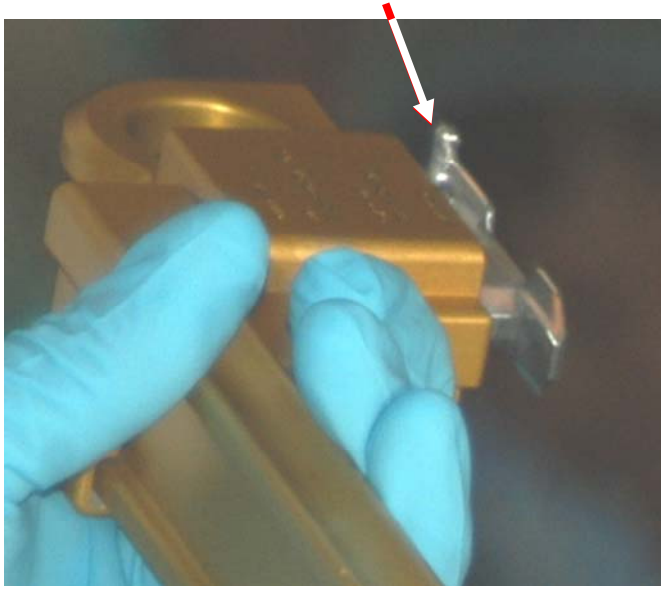

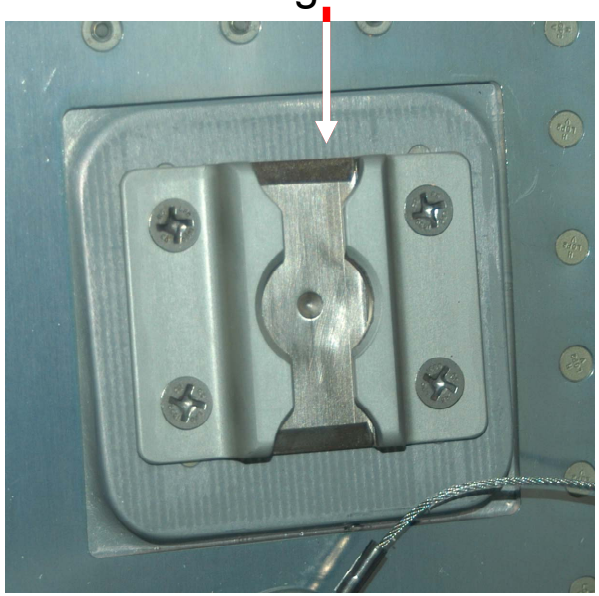

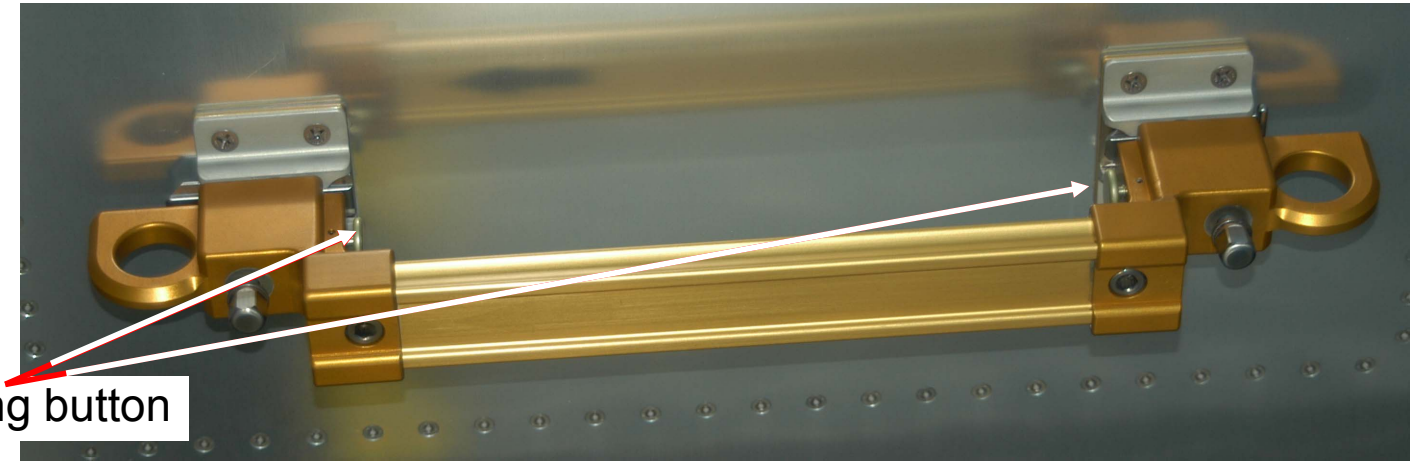

ON-ORBIT INSTALLED WIF

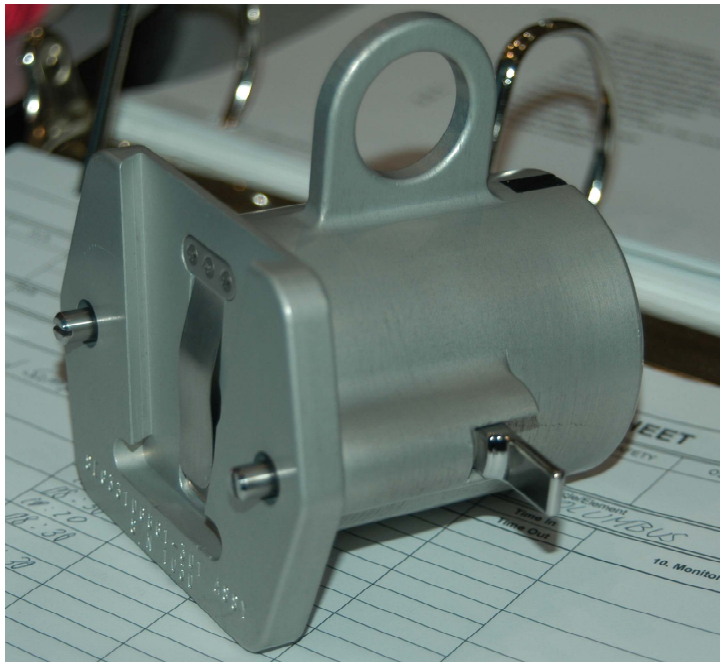

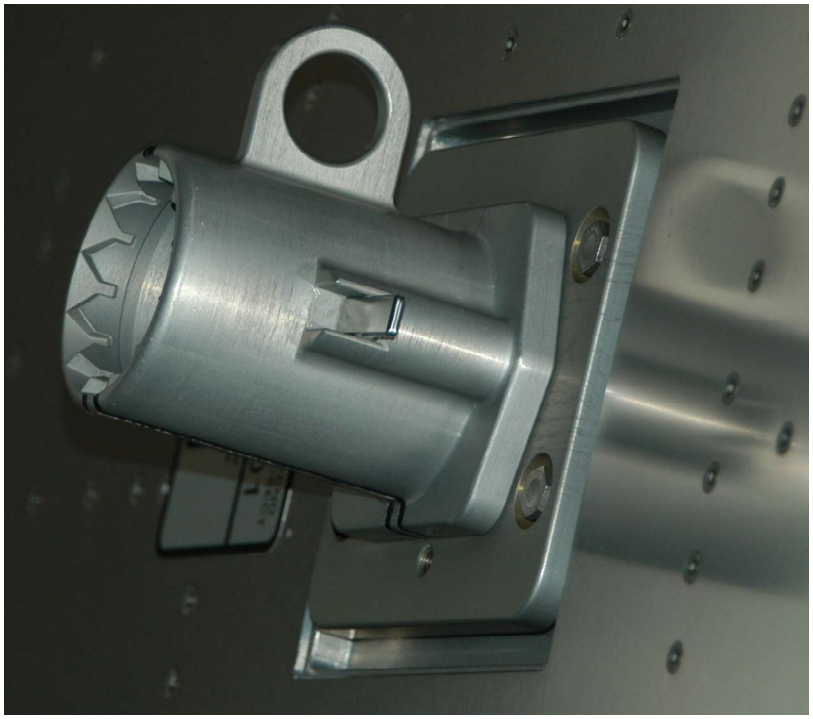

NOTE

5 potential locations
2 WIFs flown
Installing WIFs at sites 1 and 3 along COL handrail path

KEEL PIN COVER

Label faces inboard toward Node 2 (to match conducting Velcro patches)

TRUNNION SCUFF PLATE COVER AND TRUNNION PIN COVER

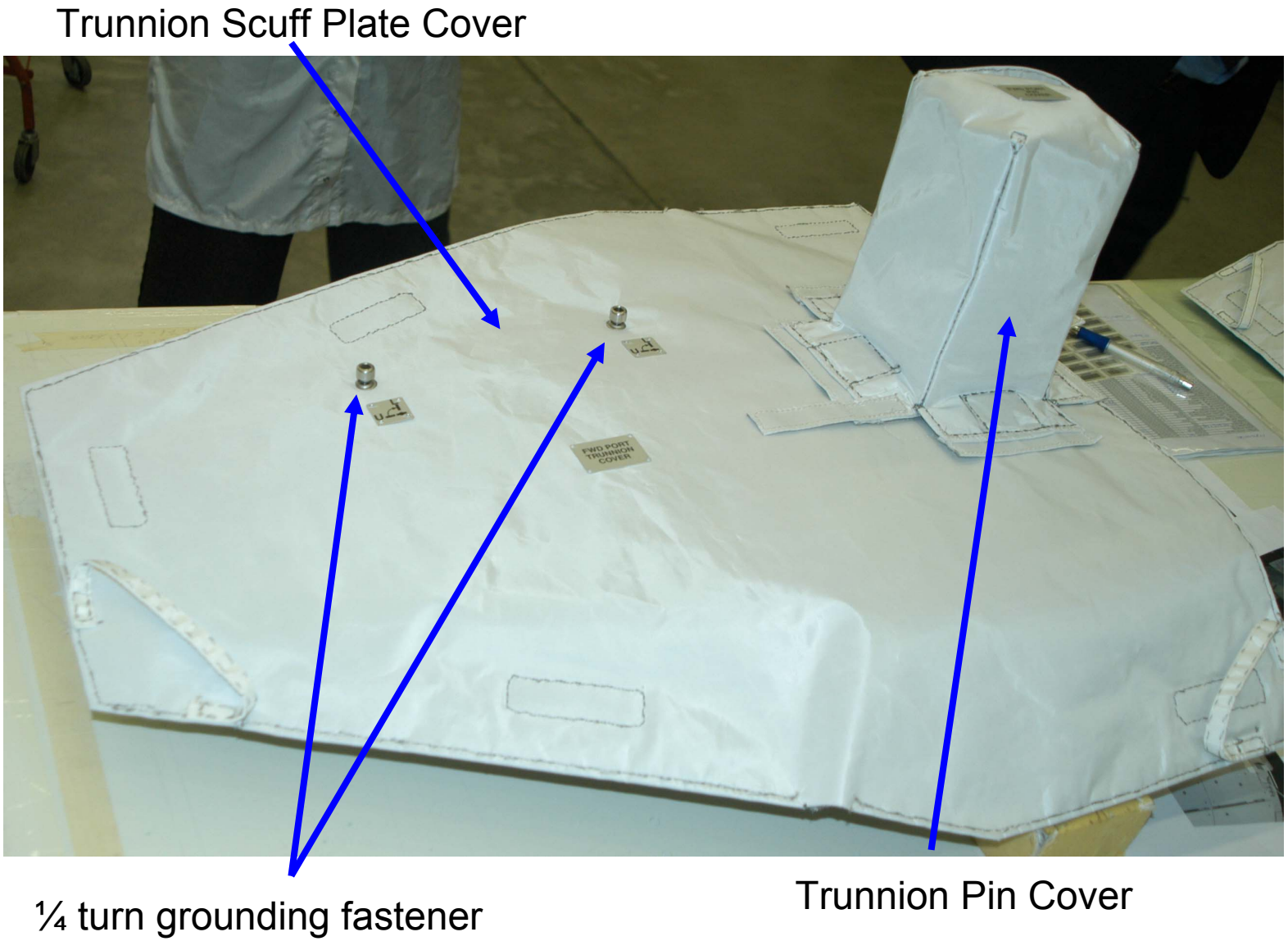

TRUNNION COVER 1/4 TURN FASTENER (GROUNDING)

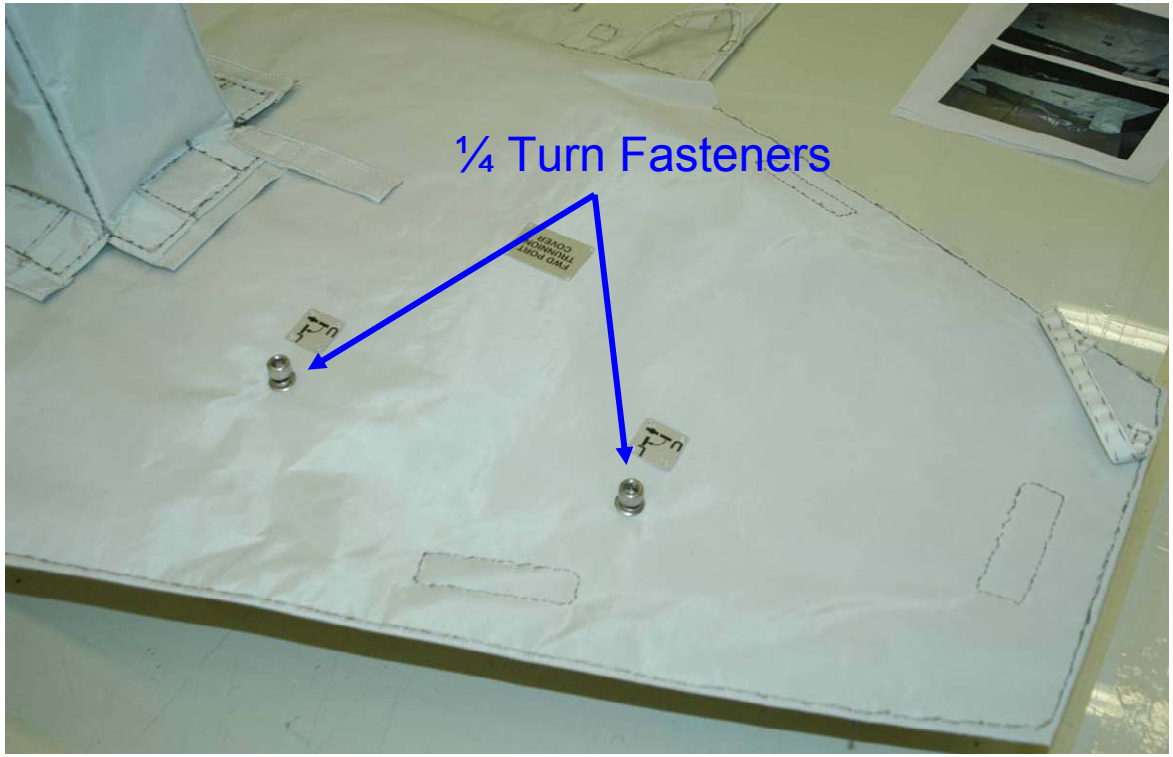

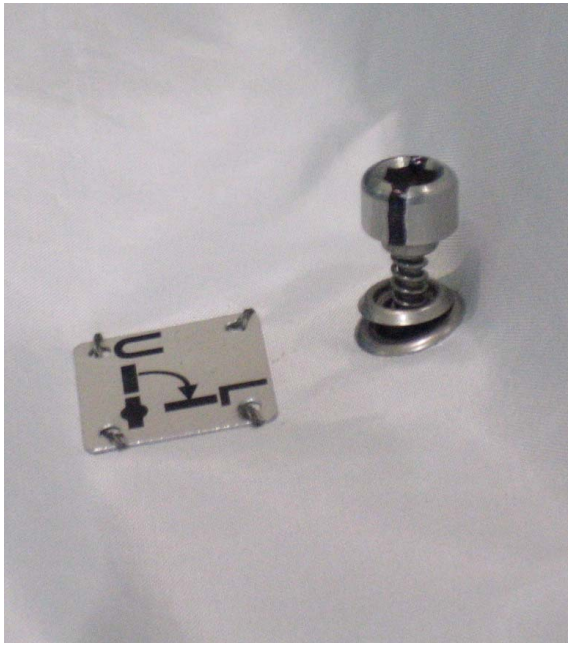

OIH/WIF LOCATIONS ON COLUMBUS

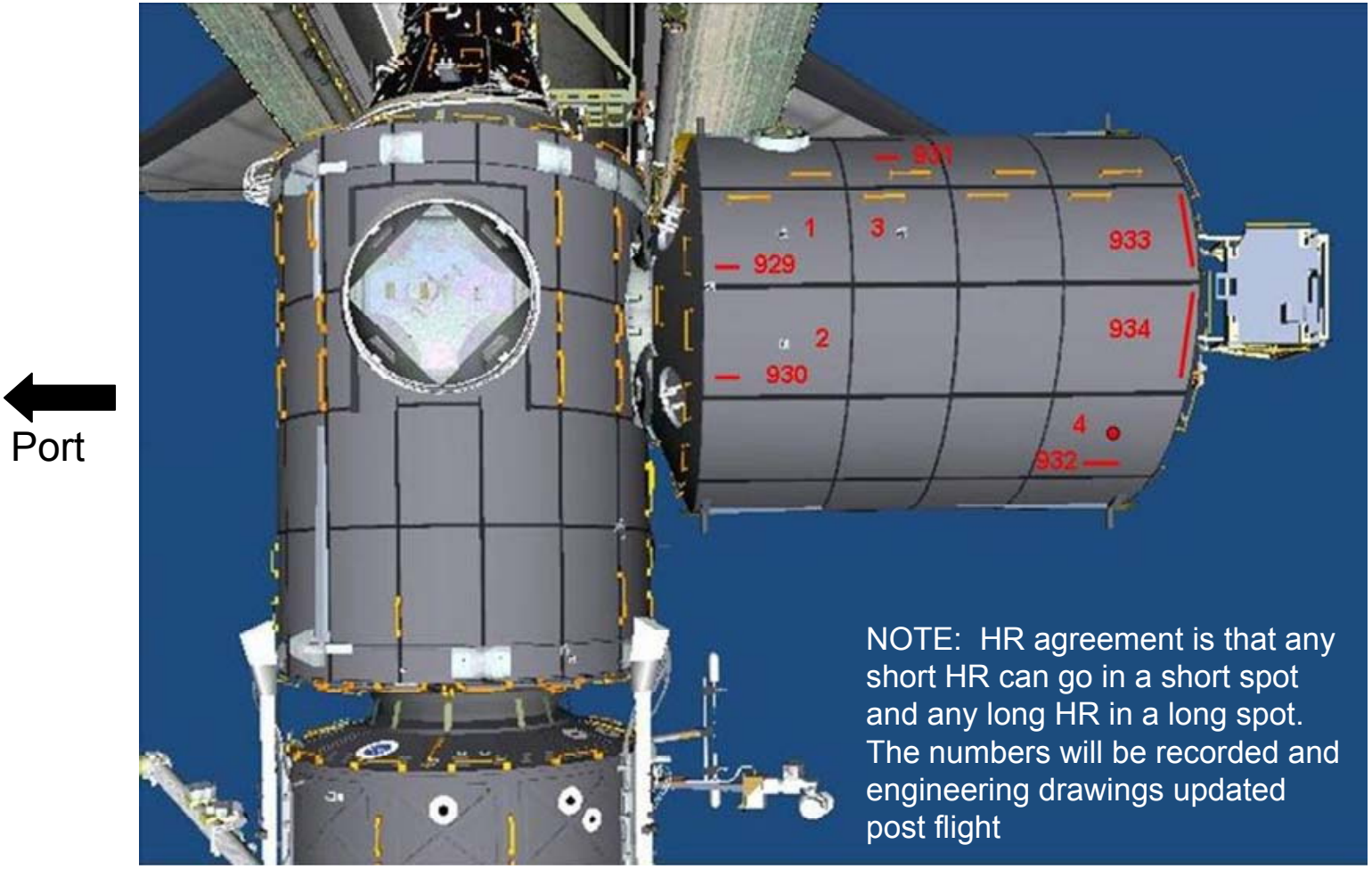

Looking Nadir

WIF Orientation: Single line (and tether point) all point counterclockwise when viewed from the port end cone

OIH/WIF LOCATIONS ON COLUMBUS (Cont)

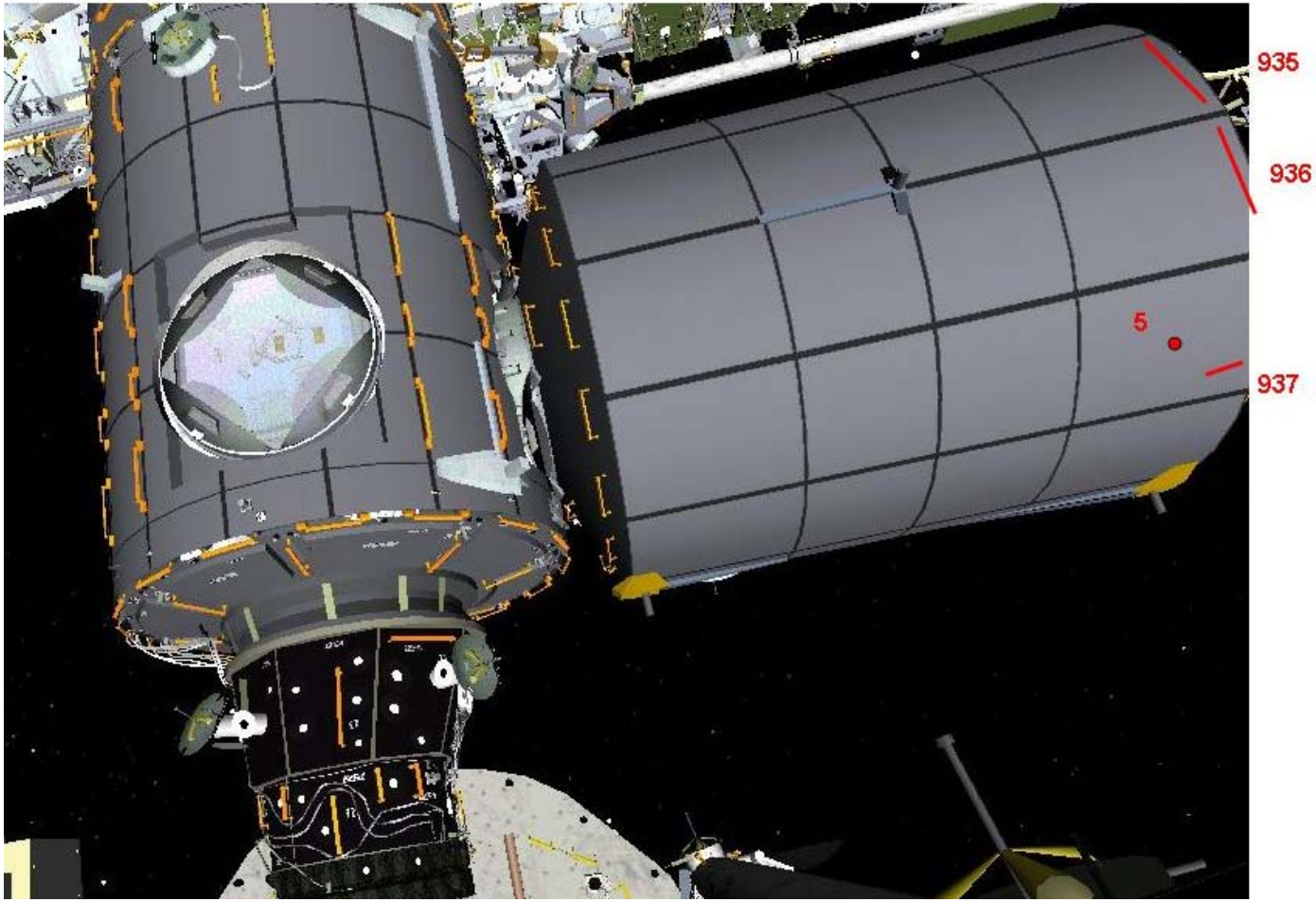

View from payload bay

OIH/WIF LOCATIONS ON COLUMBUS (Cont)

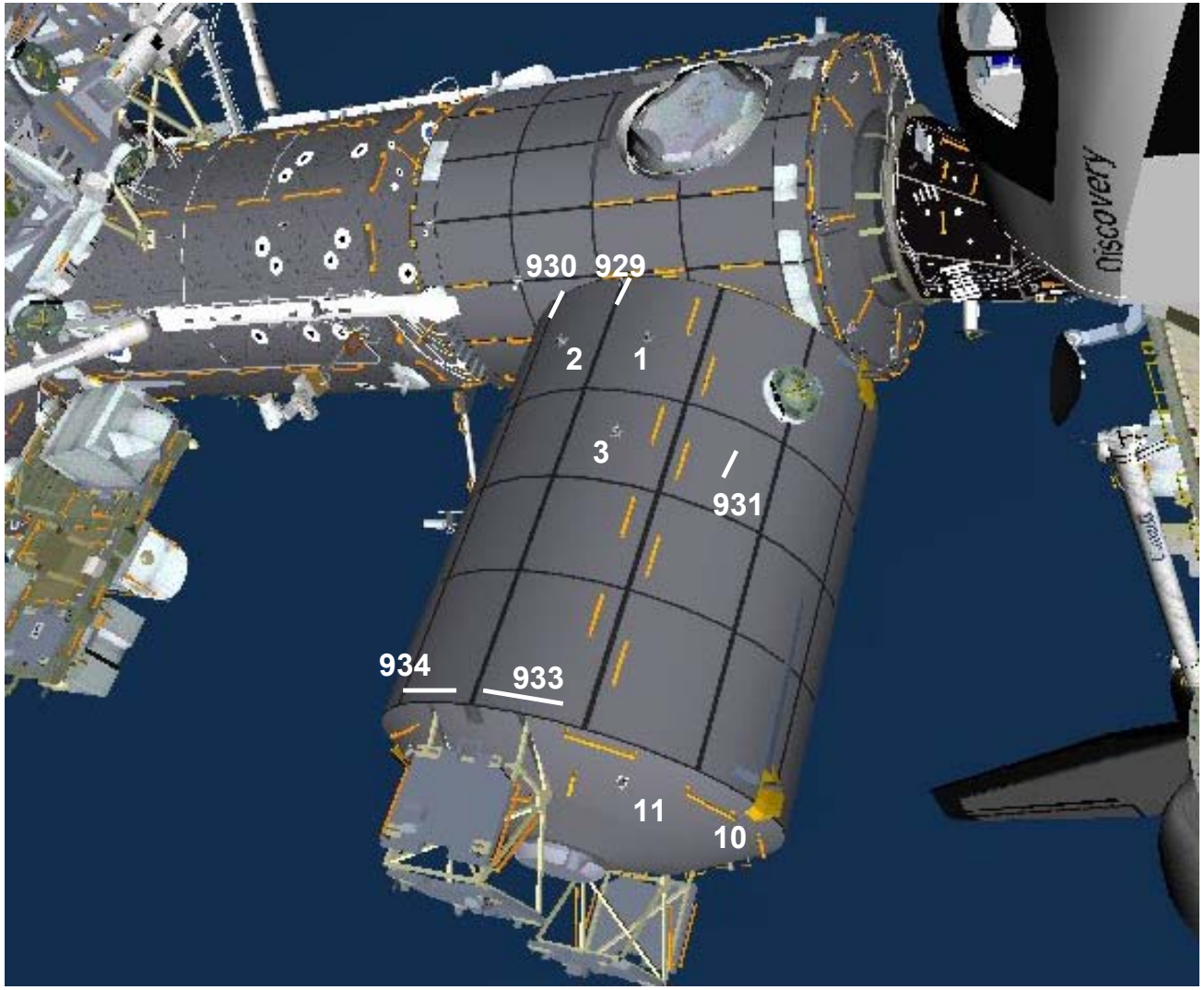

Looking Nadir, Aft, and Port

GAP SPANNERS ON NODE 2

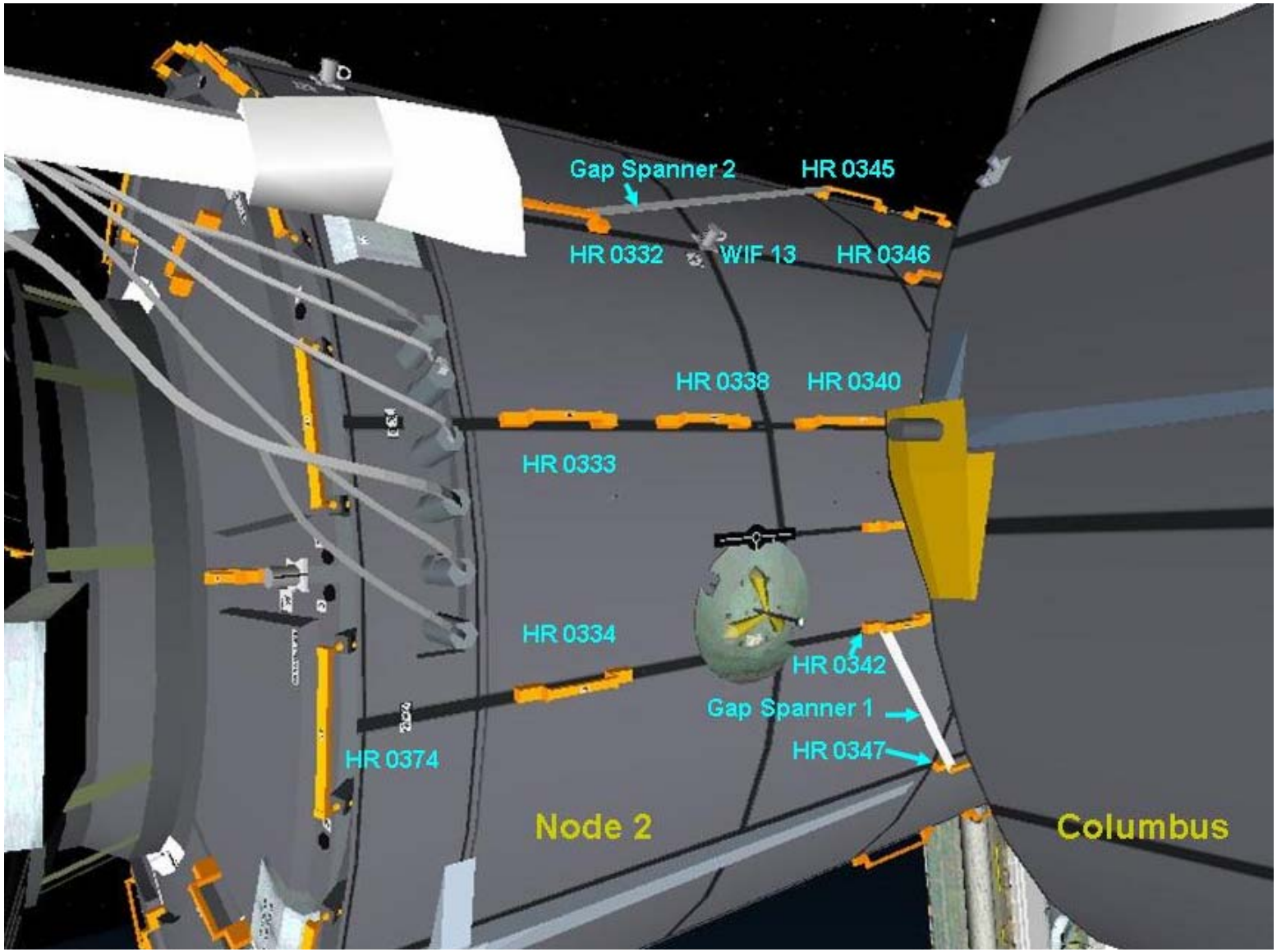

ESP-2 NADIR SITE 5 FOR CMG

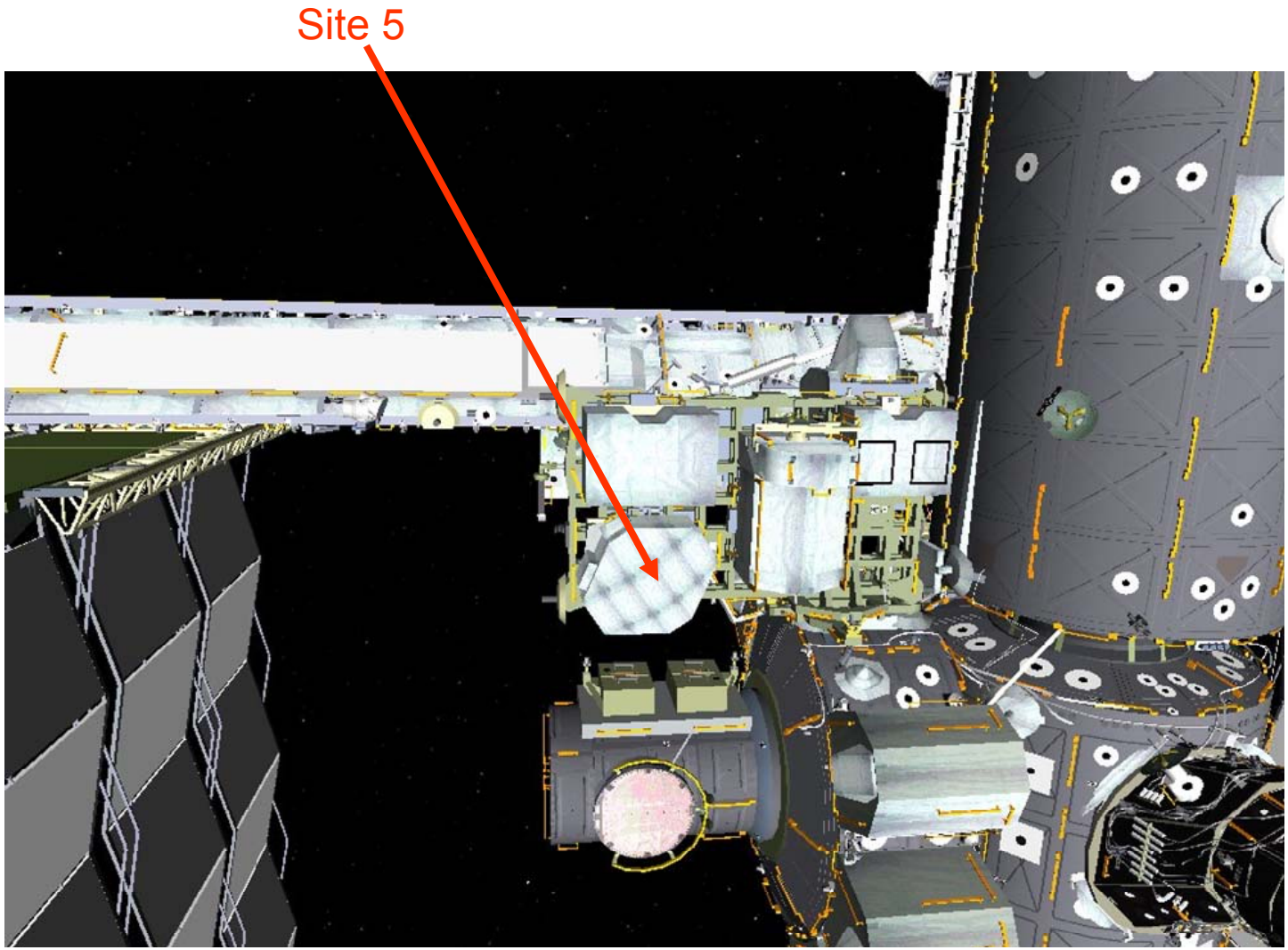

ESP-2 NADIR SITE 5 FOR CMG (Cont)

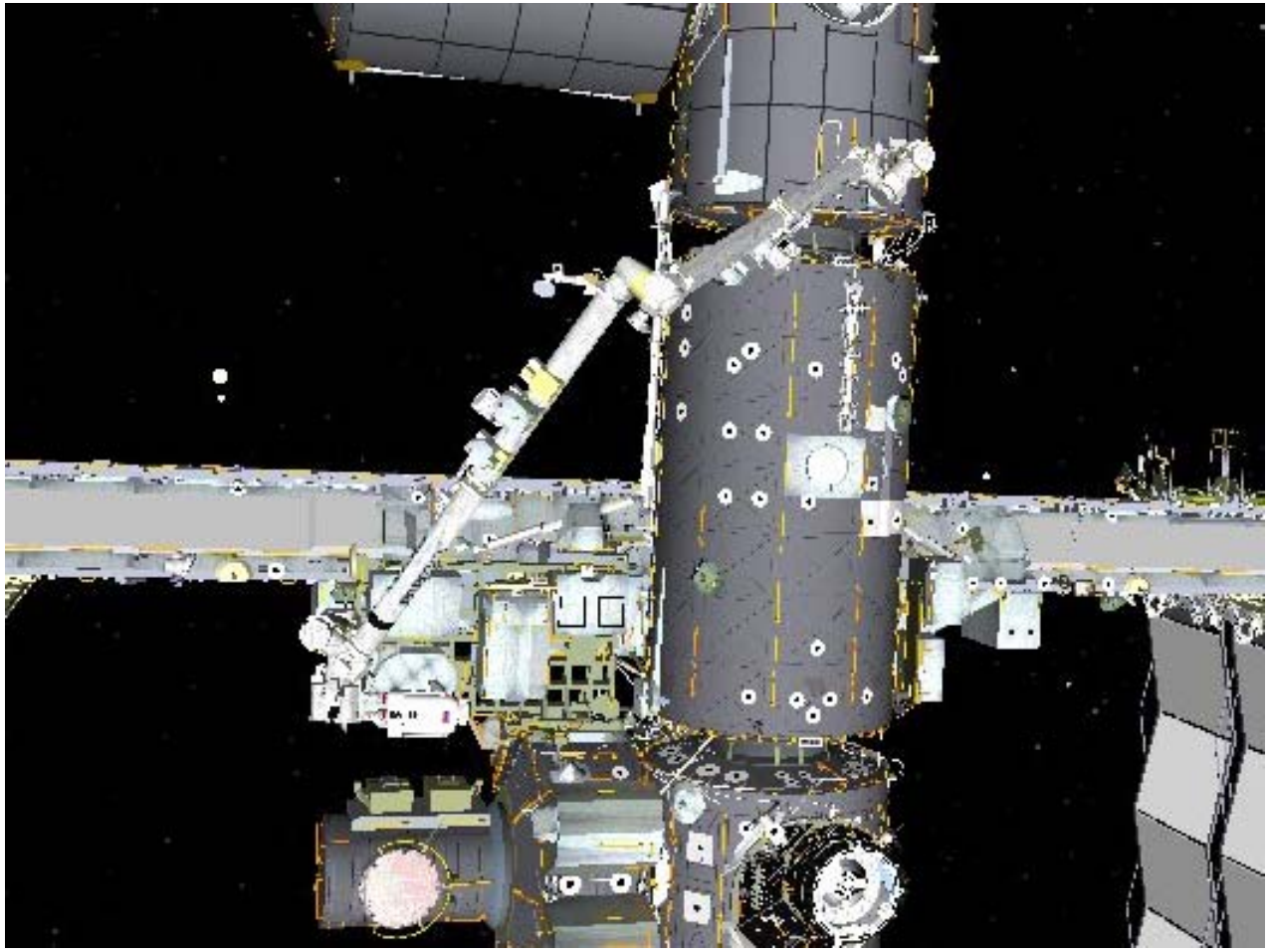

CMG ON FRAM

Shim Bolts Locations

(shims cannot be seen in photo)

3 A and B

6 A and B

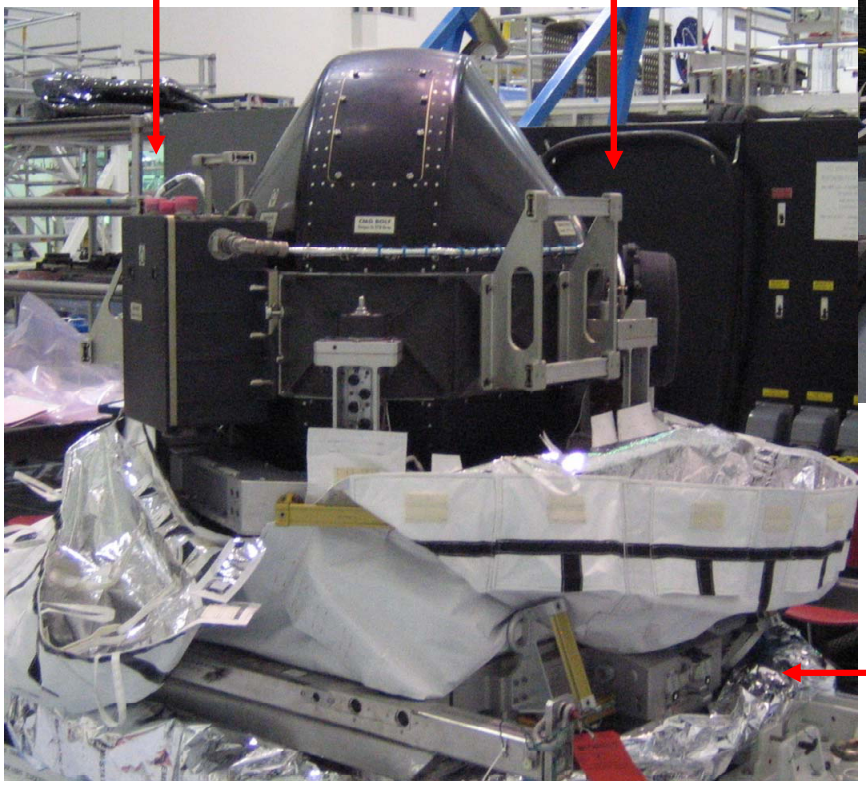

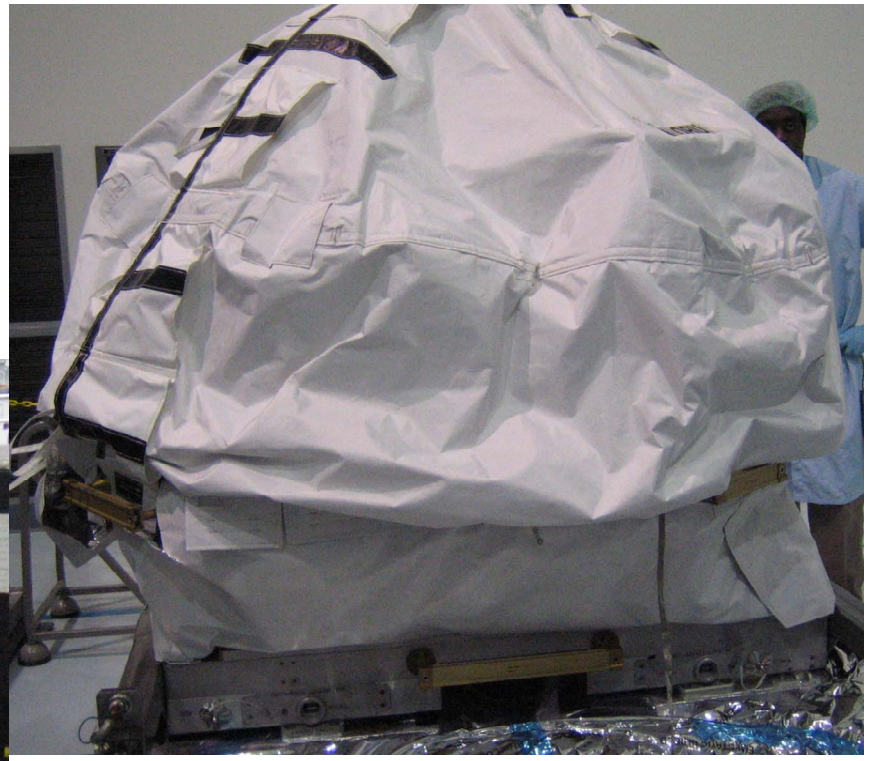

MLI Clamshell closed

Primary FRAM Bolt

CMG WITHOUT MLI

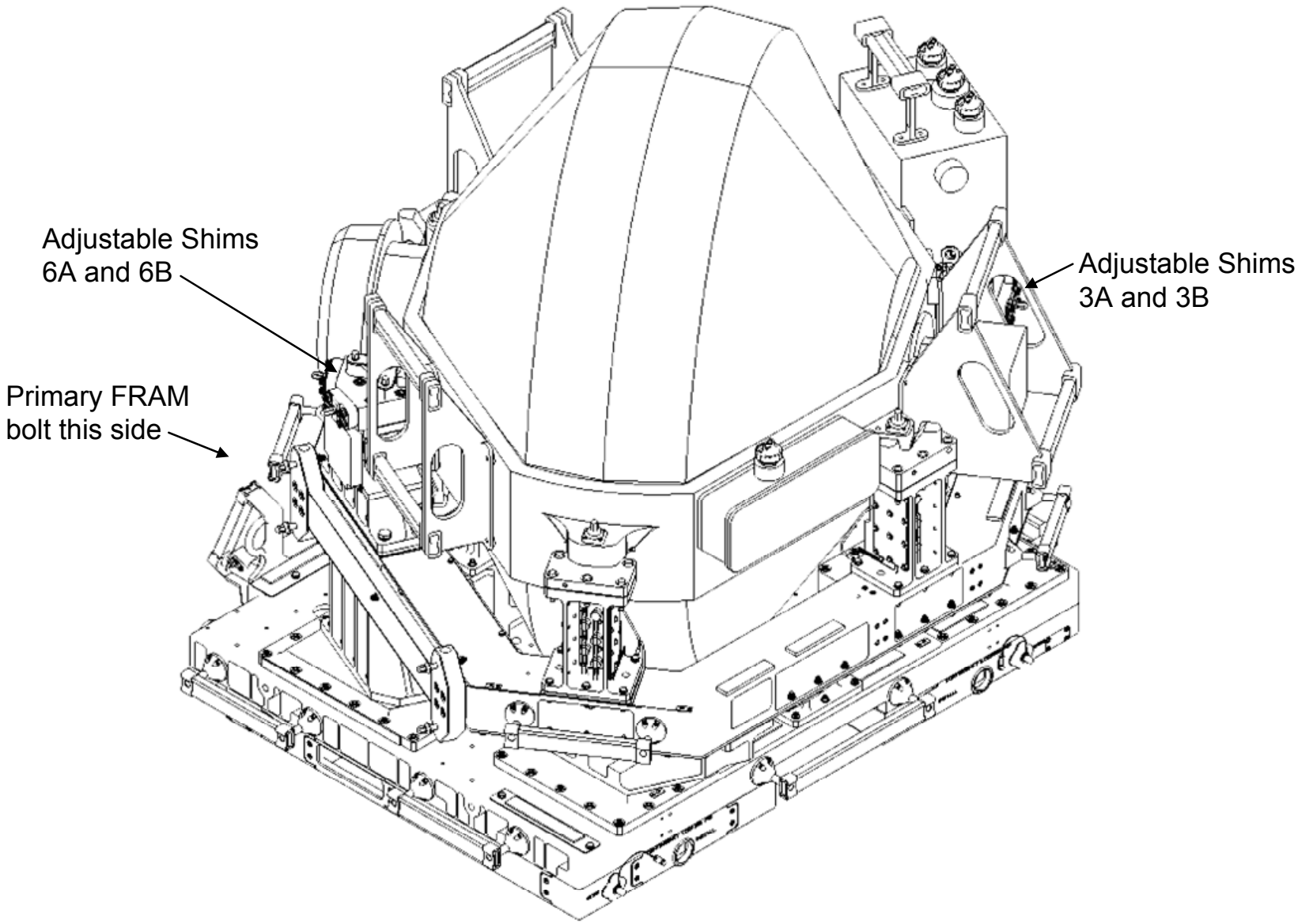

ADJUSTABLE SHIM LOCATIONS

3A and 3B

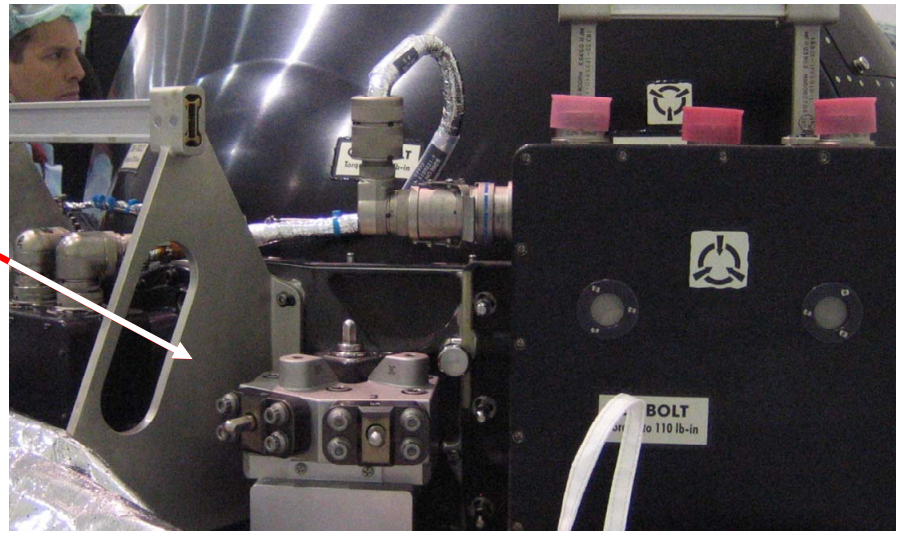

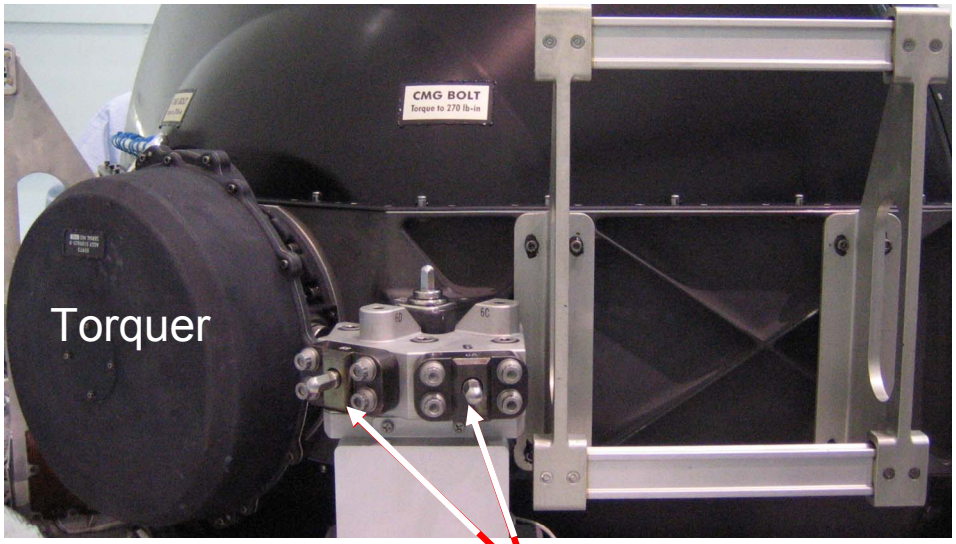

6A and 6B

CMG WITH MLI

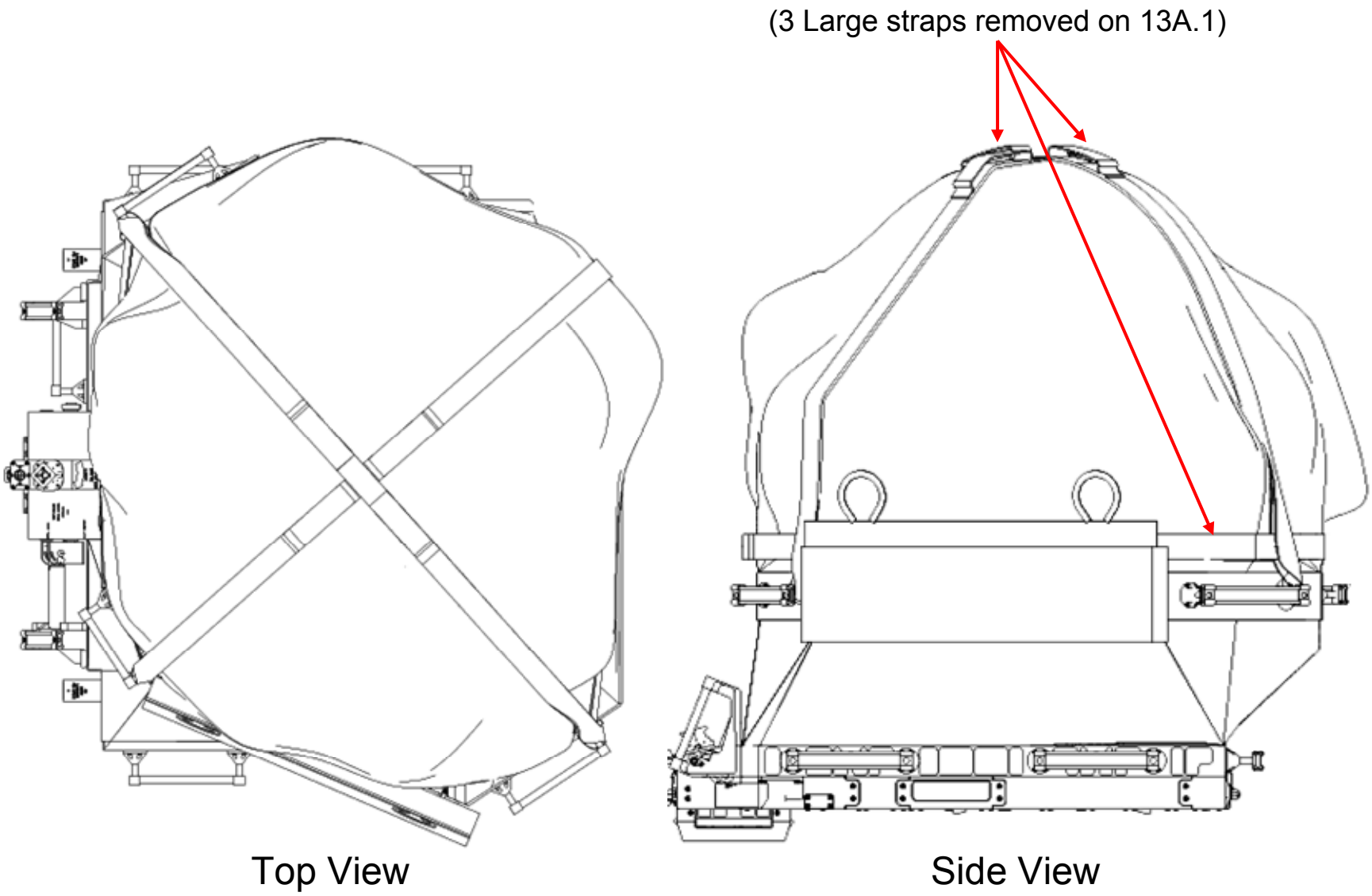

CMG ADJUSTABLE SHIMS

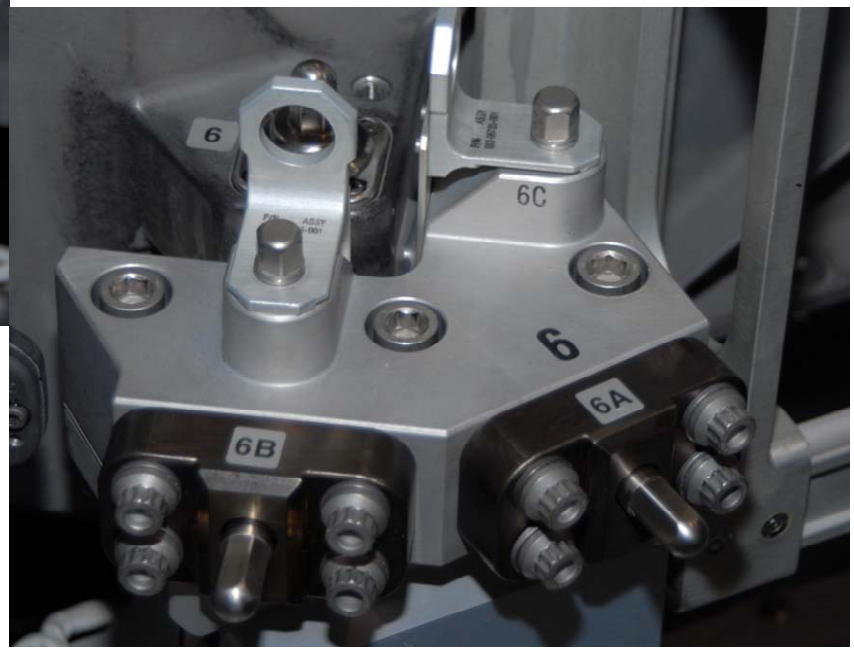

BALLSTACK – MUTEE

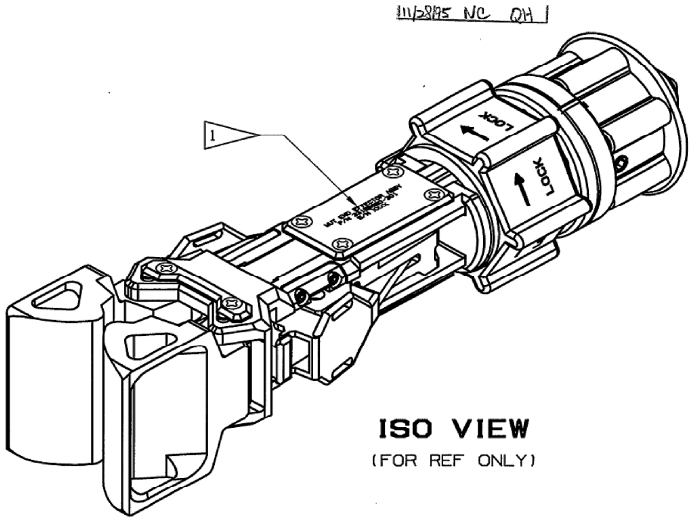

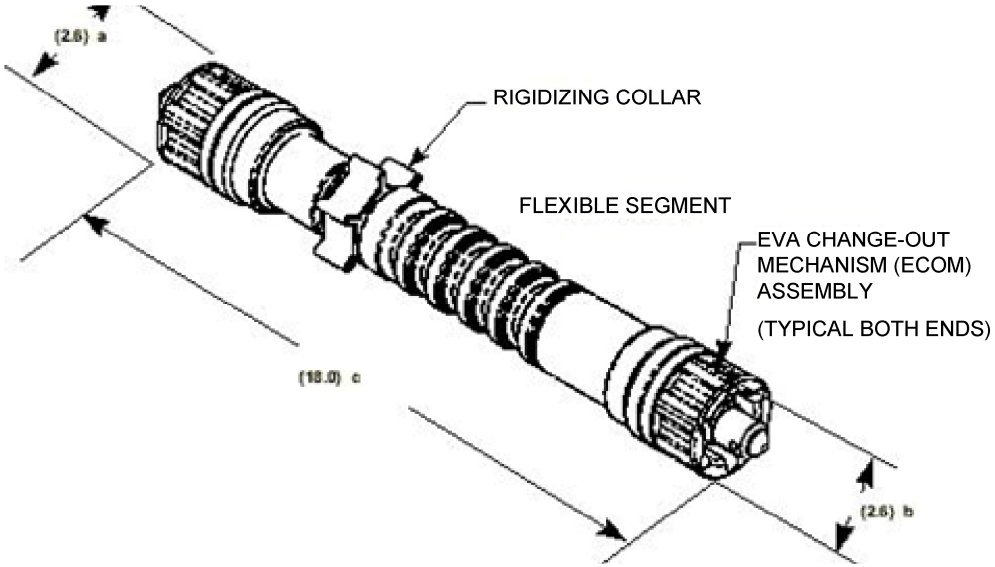

This Page Intentionally Blank

Space Shuttle Program
FLIGHT DATA FILE

JSC-48024-122
FINAL, REV A

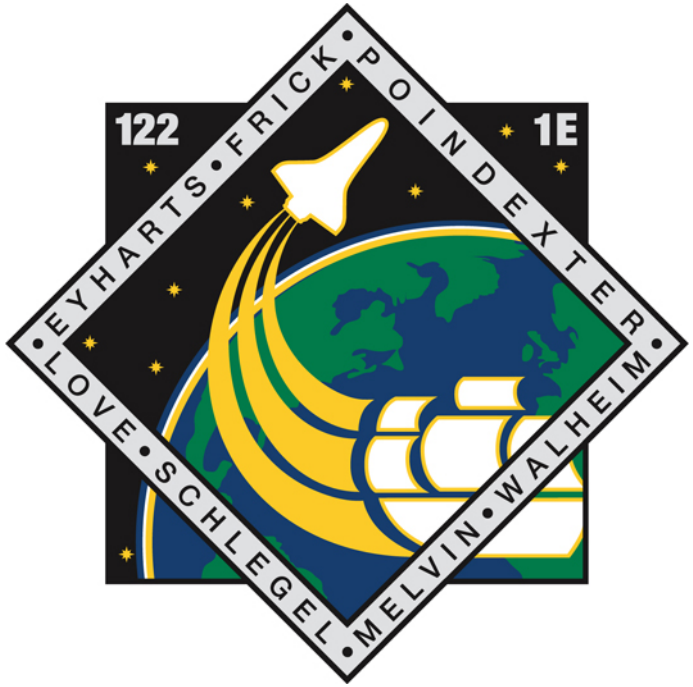

EVA CHECKLIST

STS 122

Flight Cover (trim bottom to expose tabs)