Space Shuttle Program
FLIGHT DATA FILE

JSC-48020-122

Entry Checklist

STS-122 Flight Supplement

Mission Operations Directorate
Flight Design and Dynamics Division

Final
October 16, 2007

National Aeronautics and
Space Administration

Lyndon B. Johnson Space Center
Houston, Texas

Verify this is the correct version for the pending operation (training, simulation or flight).
Electronic copies of FDF books are available. URL: http://mod/jsc/nasa.gov/do3/FDF/index.html

JSC-48020-122

MISSION OPERATIONS DIRECTORATE

ENTRY CHECKLIST
STS-122 FLIGHT SUPPLEMENT

FINAL
October 16, 2007

PREPARED BY:

Marcia M. Trump
Book Manager

APPROVED BY:

Scott A. Hartman
Lead Entry GPO

P. J. Bertsch
Chief, Ascent/Descent
Dynamics Branch

This document is under the configuration control of the Crew Procedures Control Board (CPCB). All proposed changes must be submitted via FDF Workflow Crew Procedure Change Request (CR) to DO3/FDF Manager.

Additional distribution of this book, for official use only, may be requested in writing to DO3/PMO Administrator. The request must include justification and requester's name, organization, position, and phone number. Contractor requests are made through the NASA or DOD organization supported. Deletions, reduction in quantity, or change of address may be submitted to DO3/FDF Management Office, 281-244-1184.

ENT/122/FIN

Incorporates the following:		
482#:	ENT FS-0007	MULTI-1807

AREAS OF TECHNICAL RESPONSIBILITY

Book Manager	DM43/M. Trump	281-483-8029
Deorbit Burn to Entry Interface	DM43/G. Pogue	281-483-8067
Contingency Procedures and Entry Interface thru Rollout	DM43/G. Pogue	281-483-8067

NOTE

This Flight Supplement must be integrated into the generic Entry Checklist to have a complete document for flight. Insert the Flight Supplement (FS) pages in the proper numerical order in the generic Entry Checklist by using the List of Effective Pages (LOEP) which provides the sequence for merging pages to create a complete Entry Checklist.

ENTRY CHECKLIST
STS-122 FLIGHT SUPPLEMENT

LIST OF EFFECTIVE PAGES

FINAL 10/16/07

Sign Off	*	generic	3-9		generic
ii	*	generic	3-10		generic
Sign Off	*	122/FIN	3-11		generic
FS iv	*	122/FIN	3-12		generic
v	*	generic	3-13		generic
vi	*	generic	3-14		generic
vii	*	generic	FS 3-15		122/FIN
viii	*	generic	FS 3-16		122/FIN
ix	*	generic	FS 3-17		122/FIN
x	*	generic	FS 3-18		122/FIN
FS xi	*	122/FIN	3-19		generic
FS xii	*	122/FIN	3-20		generic
FS xiii	*	122/FIN	3-21		generic
FS xiv	*	122/FIN	3-22		generic
xv		generic	3-23		generic
xvi		generic	3-24		generic
1-1 (3 pgs)	†	generic	3-25		generic
1-2 (3 pgs)	†	generic	3-26		generic
2-1		generic	3-27		generic
2-2 (6 pgs)	†	generic	3-28		generic
2-3 (6 pgs)	†	generic	FS 3-29		122/FIN
2-4		generic	FS 3-30		122/FIN
FS 2-5		122/FIN	3-31		generic
FS 2-6		122/FIN	3-32		generic
FS 3-1		122/FIN	FS 3-33		122/FIN
FS 3-2		122/FIN	FS 3-34		122/FIN
FS 3-3		122/FIN	3-35		generic
FS 3-4		122/FIN	3-36		generic
3-5		generic	3-37		generic
3-6		generic	3-38		generic
FS 3-7		122/FIN	3-39		generic
FS 3-8		122/FIN	3-40		generic

* – Omit from flight book
† – Extra pages in crew copy only

3-41	generic
3-42	generic
3-43	generic
3-44	generic
4-1	generic
4-2	generic
4-3	generic
4-4	generic
FS 4-5	122/FIN
FS 4-6	122/FIN
FS 4-7	122/FIN
FS 4-8	122/FIN
FS 4-9	122/FIN
FS 4-10	122/FIN
4-11	generic
4-12	generic
5-1	generic
5-2	generic
5-3	generic
5-4	generic
5-5	generic
5-6	generic
5-7	generic
5-8	generic
5-9	generic
5-10	generic
5-11	generic
5-12	generic
5-13	generic
5-14	generic
5-15	generic
5-16	generic
5-17	generic
5-18	generic
FS 5-19	122/FIN
FS 5-20	122/FIN
5-21	generic
5-22	generic
5-23	generic
5-24	generic
6-1	generic
6-2	generic
6-3	generic
6-4	generic
7-1*	generic
7-2*	generic
FS 8-1*	122/FIN
FS CC 8-2*	122/FIN
FS CC 8-3*	122/FIN
FS CC 8-4*	122/FIN
CC 8-5*	generic
CC 8-6*	generic
CC 8-7*	generic
CC 8-8*	generic
CC 8-9*	generic
CC 8-10*	generic
CC 8-11*	generic
CC 8-12*	generic
CC 8-13*	generic
CC 8-14*	generic
CC 8-15*	generic
CC 8-16*	generic
FS CC 8-17*	122/FIN
FS CC 8-18*	122/FIN
CC 8-19*	generic
8-20*	generic
CC 8-21*	generic
CC 8-22*	generic
FS CC 8-23*	122/FIN
FS CC 8-24*	122/FIN

* – Omit from flight book

ENTRY CUE CARDS

Title	Ref. Page	Card No.
DEORBIT BURN FLIGHT RULES (Front)	FS CC 8-2	ENT-1a/122/D/A
(Back)	FS CC 8-3	ENT-1b/122/D/A
DEORBIT BURN (RCS) (Front)	FS CC 8-4	ENT-3a/D/L
(Back)	CC 8-6	generic
DEORBIT BURN (2 ENG) (Front)	CC 8-8	generic
DEORBIT BURN (1 ENG) (Back)	CC 8-10	generic
UNBALANCED PRPLT DEORBIT BURN (Front)	CC 8-12	generic
DEORBIT BURN (MIXED XFEED) (Back)	CC 8-14	generic
ENTRY MANEUVERS (Front)	CC 8-16	generic
(Back)	FS CC 8-17	ENT-6b/122/E/A
ENTRY NO-GO CHECKLIST (Front)	FS CC 8-18	ENT-7a/E/K
EMERGENCY EGRESS (Back)	CC 8-19	generic
ENTRY CONTROL (Front)	CC 8-21	generic
(Back)	CC 8-22	generic
DEORBIT BURN MONITOR (Front)	FS CC 8-23	ENT-2a/122/A,O,D,E/A
OMS FAILURES (Back)	FS CC 8-24	ENT-2b/122/A,O,D,E/A

This Page Intentionally Blank

OMS/RCS ΔV

OMS/
RCS ΔV

OMS He PRESS/ΔV/BURN TIME

OMS% GAGE	OMS He Press *	OMS ΔV	RCS ΔV	RCS BURN MIN:SEC
50	3210	276	229	7:20
40	2810	216	180	5:44
38	2730	204	170	5:25
36	2650	192	160	5:06
34	2570	180	150	4:47
32	2490	168	140	4:28
30	2410	156	130	4:08
28	2330	144	120	3:49
26	2250	131	110	3:30
24	2170	119	100	3:11
22	2090	107	90	2:52
20	2010	95	80	2:33
18	1930	83	70	2:14
16	1850	71	60	1:54
14	1770	58	49	1:34
12	1690	46	39	1:15
10	1610	34	29	0:55
8	1530	22	18	0:35
6	1450	9	8	0:16
5	1410	3	3	0:06

* He pressure not valid until 1 hr after last burn

ΔV CAPABILITY
ARCS ΔV fps = [0.9] x [L% + R% - AFT QTY 1]
FRCS ΔV fps = [0.9] x FRCS %
OMS ΔV fps = [6.0] x OMS %

NOTE: Uses assumed vehicle weight of 218,632 lb

DEORBIT BURN

DEORBIT BURN

STS-122 LANDING SITE TABLE
(50° to 63.5° INCLINATION)

DEORBIT BURN

SITE	LOCATION	RWY	TACANS		MLS CH	LG	+ OVR RUN
				ITEM 5			
1	KSC	KSC 15 KSC 33	TTS 59Y	COF 97	8 6	15000 15000	1000 1000
2	BEN GUERIR	BEN 36 BEN 18	MAK 80 ■	CBA 116 ■	- -	13720 13220	0 1000
3	MORON AB	MRN 20 MRN 02	MRN 100	AOG 23	◆6 -	11730 11730	1000 1000
4	ZARAGOZA	ZZA 30L ZZA 12R	ZZA 64	ZAR 77 ■	◆6 -	12200 12200	1000 1010
5	MYRTLE BEACH	MYR 36 MYR 18	ILM 117	FLO 99	- -	9500 9500	1000 1000
6	WILMINGTON	ILM 06 ILM 24	ILM 117	DIW 107 ■	- -	7500 7500	0 0
7	CHERRY POINT	NKT 32L NKT 23R	EWN 83 ■	NCA 101	- -	7110 7100	800 880
8	OCEANA NAS	NTU 32R NTU 23L	NGU 48	ORF 116	- -	7500 11500	0 0
9	WALLOPS	WAL 28 WAL 04	SBY 49	SWL 71	- -	7510 8750	0 0
10	DOVER AFB	DOV 32 DOV 19	SIE 95	CYN 81	- -	12400 9100	0 0
11	ATLANTIC CITY	ACY 31 ACY 13	CYN 81	SIE 95	- -	9500 9500	0 0
12	BEN GUERIR	BEN 36 BEN 18	MAK 80 ■	CBA 116 ■	- -	13720 13220	0 1000
13	*MORON AB	MRN 20 MRN 02	MRN 100	AOG 23	◆6 -	11730 11730	1000 1000
14	*ZARAGOZA	ZZA 30L ZZA 12R	ZZA 64	ZAR 77 ■	◆6 -	12200 12200	1000 1010
15	GABRESKI	FOK 06 FOK 24	HTO 83	GON 45Y■	- -	8500 8500	1000 1000

◆ Available for TAL Only
* LO XRNG TAL Site

■ DME
Length after displaced threshold

STS-122 LANDING SITE TABLE
(50° to 63.5° INCLINATION)

SITE	LOCATION	RWY	TACANS		MLS CH	LG	+ OVR RUN
				ITEM 5			
16	OTIS ANGB	FMH 32 FMH 23	BOS 74	PVD 103	- -	9000 7500	0 0
17	PEASE INT'L	PSM 34 PSM 16	ENE 118	BOS 74	- -	10020 10020	0 0
18	HALIFAX INT'L	YHZ 23 YHZ 32	UAW 38	YHZ 98 ■	- -	8800 7700	0 0
19	STEPHENVILLE	YJT 09 YJT 27	YJT 78	YDF 80 ■	- -	9500 9500	0 0
20	ST JOHNS INT'L	YYT 29 YYT 11	UYT 23	YYT 82 ■	- -	8500 8500	0 0
21	GANDER INT'L	YQX 21 YQX 31	YQX 74	IQX 32 ■	- -	9700 8900	0 0
22	GOOSE BAY	YYR 26 YYR 34	UYR 40	YYR 120 ■	- -	10550 9080	0 0
23	LAJES	LAJ 15 LAJ 33	TRM 109	LAJ 45	- -	10870 10870	970 990
24	BEJA	BEJ 01L BEJ 19R	MOJ 37	BEJ 105	- -	10820 10820	0 900
25	KEFLAVIK	IKF 20 IKF 29	KEF 57	HL 44 ■	- -	9520 9560	0 0
26	SHANNON	INN 06 INN 24	SHA 80 ■	CRK 93 ■	- -	9540 9540	0 0
27	FAIRFORD	FFA 27 FFA 09	FFA 81	BZN 56	- -	9490 9490	990 970
28	KOLN-BONN	KBO 14L KBO 32R	GIX 18	DOR 23Y ■	- -	12020 12020	0 0
29	ISTRES AB	FMI 33 FMI 15	◆FMI 16	NIM 53	◆6 -	11300 12300	3960 0
30	ESENBOGA	ESN 03R ESN 21L	BAG 78 ■	BUK 90 ■	- -	11800 11800	0 0

◆ Available for TAL Only

■ DME

Length after displaced threshold

STS-122 LANDING SITE TABLE
(50° to 63.5° INCLINATION)

SITE	LOCATION	RWY	TACANS		MLS CH	LG	+ OVR RUN
				ITEM 5			
31	KING KHALID	KKI 15R KKI 33L	RIY 92	KIA 80	- -	13300 13300	0 0
32	DIEGO GARCIA	JDG 31 JDG 13	NKW 57	NKW 57	- -	12000 12000	950 950
33	AMBERLEY TINDAL RAAF	AMB 15 PTN 14	AMB 94 -	- TDL 70	- -	9500 8500	0 0
34	YOKOTA AB	JTY 36 JTY 18	SHT 19	NJA 98	- -	11000 11000	1000 1000
35	ANDERSEN AFB	GUA 06L GUA 24R	UAM 54	UNZ 105	- -	10560 10560	1050 1000
36	WAKE ISLAND	WAK 28 WAK 10	AWK 82	AWK 82	- -	9360 9360	0 0
37	HONOLULU	HNL 08R HNL 26L	HNL 95	NGF 93	- -	11500 11500	0 0
38	ELMENDORF	EDF 24 EDF 06	EDF 81	BGQ 72	- -	9500 9500	0 0
39	HAO ATOLL	HAO 12 HAO 30	HAO 85 ■	HAO 85 ■	- -	10390 10390	0 0
40	EDW TEMP	●EDT 22R ●EDT 04L	EDW 111	LHS 21	8 6	12000 12000	1000 1000
41	ASCENSION	HAW 13 HAW 31	ASI 59	ASI 59	- -	9520 9520	0 0
42	NORTHRUP	NOR 17 NOR 23	SNG 121Y	HMN 92	6 6	15000 15000	Lkbd Lkbd
43	NORTHRUP	NOR 05 NOR 35	SNG 121Y	HMN 92	- -	15000 15000	Lkbd Lkbd
44	EDWARDS AFB	EDW 15 EDW 18L	EDW 111	LHS 21	- -	16300 15000	Lkbd Lkbd
45	EDWARDS AFB	EDW 22 EDW 04	EDW 111	LHS 21	8/† 6	15010 14010	0 1800

† MSBLS Jr. Ch 8 - Requires Uplink
● RWY ID EDW change to EDT via uplink
■ DME
Length after displaced threshold

1: GNC DEORB MNVR COAST	2: GNC 50 HORIZ SIT
	3: BFS, GNC 50 HORIZ SIT

HORIZ SIT CONFIG

ALTM – ITEM 9 + [ ][ ][.][ ][ ]

	PASS ITEM		BFS ITEM	
PTI	INH	√1		
LAND SITE (DEL PAD)		√41		√41
RWY (DEL PAD)		√3		√3
		√4		√4
TACAN (DEL PAD)		√5		√5
RA	blank	√46		
TAEM TGT				
G&N	OVHD	√6	blank	
HSI	blank		blank	
XEP	NEP	√7	NEP	√7
AIM (DEL PAD)	NOM (or CLSE)	√8	NOM or (CLSE)	√8
SPDBK	NOM	√39		
TAC	INH	√20	INH	√20
GPS	INH	√43	INH	√43
DRAG H	AUT	√22	AUT	√22
ADTA H	INH	√26	INH	√26
ADTA TO G&C	INH	√29	AUT	√28
DES any failed TACANs		√		√
TAC	DELTA	√35		
AIF_G	INH	√48		

* If BFS engaged: *
* Set BFS HSD ITEMs to PASS config *

G51 SEL ATMOSPHERE:
incl ≤ 50° ITEM 22 EXEC
incl > 50° SEL ITEM NR (table)

Hemi	Jan	Feb	Mar	Apr	May	Jun	Jul	Aug	Sep	Oct	Nov	Dec
N Desc	23	23	23	23	22	24	24	24	22	23	23	23
S Asc	24	24	22	23	23	23	23	23	23	23	22	24
N Asc	22											
S Desc												

1: GNC DEORB MNVR COAST	2: GNC 50 HORIZ SIT

3: GNC 51 OVERRIDE

√ELEVON AUTO – ITEM 17 (*)
√SSME REPOS – ITEM 19 (ENA)
√WRAP MODE – ITEM 45 (ENA)
If PLB holding > 10K lb:
FILTER ALT – ITEM 21 EXEC (*)

3: BFS, GNC 51 OVERRIDE

√ELEVON AUTO – ITEM 17 (*)
√SSME REPOS – ITEM 19 (ENA)
√WRAP MODE – ITEM 45 (ENA)
If PLB holding > 10K lb:
√FILTER ALT – ITEM 21 (*)

* DES any failed/comm faulted *
* IMU, RGA, AA, or SURF feedback *

2: GNC DEORB MNVR COAST

3: BFS, GNC DEORB MNVR COAST

√BFS GMBL sel config same as PASS GMBL sel config

DEORBIT BURN CARDS

BURN CARDS

DEORBIT BURN FLIGHT RULES
ONE-ORBIT LATE AVAILABLE ENT-1a/122/D/A

	FAILURE	PRE TIG Delay (max) One Orbit	PRE TIG Delay (max) One Day	POST TIG Stop Burn, > Safe HP
	APU/HYD			
1	No APU operating	X		
	DPS			
2	RDNT fail, Split		X	X
3	1 GPC	X		
4	BFS		X	
5	GPC BITE (Multiple GPCs)		X	
	ECLS			
6	2 Av Bay Fans in Bay 3	X		
7	2 Av Bay Fans in Bay 1 or 2		X	
	ELEC			
8	H2 Manf or TK leak (not in depleted tk(s) _____)	X		
9	2 MN Buses		X	X
10	CNTL CA1 (No BFS Engage in GPC 3/5)		X	
11	Multi Φ AC BUS (unshorted)	X		
	GNC			
12	1 MLS (if reqd), IMU, or TACAN (C-band not avail)	X		
13	IMU Dilemma		X	X
14	RHC Dilemma	X		
15	2 IMUs (Not targeting EDW/NOR)		X	
16	2 ADTAs (Winds>80kts or Dynamic Wx)	X		
	HOOK VELCRO			**HOOK VELCRO**
17	2 FCS Channels (same surface) (Not targeting NOR/EDW)	X		
18	2 AAs, RGAs (Not targeting EDW/NOR)	X		
	OMS			
19	Prplt Tank	X		X ①
20	Ignition (neither eng ignites)	X		
21	Both OMS Eng fail			X ②
22	Prplt Lk after LAST LOS	perigee adjust		
	AFT RCS			
23	2 jets, same direction, same pod	X		
24	Prplt Lk after LAST LOS	X		
25	1 AFT RCS PROP TK fail	X		
	COMM			
26	MCC GO for DEORBIT not rcvd		X	

① Stop Burn > OMS PRPLT FAIL HP (Ref: DEL PAD/BURN Card)
② Stop Burn > OMS ENG FAIL HP (Ref: DEL PAD/BURN Card)

BURN CARDS

DEORBIT BURN FLIGHT RULES
ONE-ORBIT LATE NOT AVAILABLE ENT-1b/122/D/A

	FAILURE	PRE TIG Delay (max) One Day	POST TIG Stop Burn, > Safe HP
	APU/HYD		
1	No APU operating	X	
	DPS		
2	RDNT fail, Split	X	X
3	1 GPC		
4	BFS	X	
5	GPC BITE (Multiple GPCs)	X	
	ECLS		
6	2 Av Bay Fans in Bay 3		
7	2 Av Bay Fans in Bay 1 or 2	X	
	ELEC		
8	H2 Manf or TK leak (not in depleted tk(s) _____)	X	
9	2 MN Buses	X	X
10	CNTL CA1 (No BFS Engage in GPC 3/5)	X	
11	Multi Φ AC BUS (unshorted)		
	GNC		
12	1 MLS (if reqd), IMU, or TACAN (C-band not avail)	X	
13	IMU Dilemma	X	X
14	RHC Dilemma	X	
15	2 IMUs (Not targeting EDW/NOR)	X	
16	2 ADTAs (Winds>80kts or Dynamic Wx)	X	
	HOOK VELCRO		**HOOK VELCRO**
17	2 FCS Channels (same surface) (Not targeting NOR/EDW)	X	
18	2 AAs, RGAs (Not targeting EDW/NOR)	X	
	OMS		
19	Prplt Tank	X	X ①
20	Ignition (neither eng ignites)	X	
21	Both OMS Eng fail		X ②
22	Prplt Lk after LAST LOS	perigee adjust	
	AFT RCS		
23	2 jets, same direction, same pod	X	
24	Prplt Lk after LAST LOS	X	
25	1 AFT RCS PROP TK fail	X	
	COMM		
26	MCC GO for DEORBIT not rcvd	X	

① Stop Burn > OMS PRPLT FAIL HP (Ref: DEL PAD/BURN Card)
② Stop Burn > OMS ENG FAIL HP (Ref: DEL PAD/BURN Card)

DEORBIT BURN (2 ENG)

√MM302 √OMS BOTH
Enter TGO + 5 sec
√TRIM per MNVR PAD or P +0.0, LY -5.7, RY +5.7
L,R OMS He PRESS/VAP ISOL A (two) – GPC
B (two) – OP
√DAP – AUTO(PASS)/DISC
ADI – LVLH(REF)/HI/MED
FLT CNTLR PWR (two) – ON

TIG-2 OMS ENG (two) – ARM/PRESS
- :15 EXEC (NO EXEC > TIG + [ ] : [ ])
- :15 If OMS AFT QTY < 11%, THC +X to OMS IGN + 1 sec
:00 TIG Start watch (√P_C, ΔVTOT, ENG VLVs)
If no OMS ignition: APUs – SHUT DN

OMS PRPLT FAIL:
Failed OMS ENG – OFF

L OMS FAIL HP	R OMS FAIL HP	
[ ]	[ ]	STOP BURN: Good OMS ENG – OFF; APUs – SHUT DN; Secure aff OMS

CONTINUE BURN:
ITEM 18 +0 EXEC
When good OMS QTY:
5%: L,R OMS XFEED (four) – OP
4%: Good OMS TK ISOL (two) – CL
If OMS P_C < 80 or OMS TEMP, OMS ENG – OFF
√ADI – LVLH, center needles
RCS COMPLETION

OMS ENG FAIL:
Failed OMS ENG – OFF
OMS XFEED at 1/2 ΔVTOT at fail [ ]
or OMS QTY [ ] %L or [ ] %R

2nd OMS FAIL (ENG or PRPLT):
Failed OMS ENG – OFF
If PRPLT FAIL:
Secure aff OMS
ITEM 18 +0 EXEC

Both ENG FAIL HP	Either PRPLT FAIL (SAFE) HP	
[ ]	[ ]	STOP BURN: APUs – SHUT DN

CONTINUE BURN:
√ADI – LVLH, center needles
Interconnect good OMS to RCS
THC +X (√OMS% vs RCS Burn Time)
RCS I'CNCT TK SW (N/A PRPLT FAIL)
THC +X (√OMS% vs RCS Burn Time)
AFT RCS RECONFIG
RCS COMPLETION

ENT-4a/D/L

DEORBIT BURN MONITOR

OMS TEMP*		
FU IN P	≥ L 230, R 230	OMS ENG FAIL
	≤ L 214, R 212	OMS PRPLT FAIL
or No FU IN P		
OMS PC* & OMS ↓ (BFS: √accel)		
ENG VLV 1 or 2 < 70		OMS ENG FAIL
or OX IN P > 227		
OX IN P ≤ 227 or No OX IN P		OMS PRPLT FAIL
OMS OX/FU TK P (√ENG IN P)		
OX/FU LOW		He PRESS/VAP ISOL (two) – OP If aff TK P not incr: He PRESS/VAP ISOL (two) – CL At PC < 72 or OMS TEMP: OMS PRPLT FAIL
OX & FU HIGH		He PRESS/VAP ISOL (two) – CL Cycle He A(B) to maintain TK P 234-284
OMS GMBL	PRI fail	L(R) OMS GMBL – SEC (twice)
	SEC fail	If high RCS usage: OMS ENG FAIL
GPC	**1(4) &** Burning OMS aff	aff GPC PWR – OFF If SEC GMBL avail: aff MDM FF 1(4) – OFF,ON L(R) OMS GMBL – SEC (twice)
	SEC GMBL lost	If high RCS usage: OMS ENG FAIL
	2 FAs lost	√MAN SHUTDN
I/O ERROR FA	**1(4)**	L(R) OMS GMBL – SEC
		I/O RESET (if recov: BFS I/O RESET) If high RCS usage: OMS ENG FAIL
	2 FAs lost	√MAN SHUTDN
BCE STRG D		I/O RESET (if recov: >>)
	1(4)	If high RCS usage: L(R) OMS GMBL – SEC (twice)
RM DLMA IMU or **GPC SET SPLIT** or **2 MN BUSES**	**ABOVE SAFE** HP ⇒ [ ][ ]	STOP BURN: OMS ENG(s) – OFF >>
	BELOW SAFE HP ⇒	IMU DLMA: After C/O: √timer [G21] If any IMU ACC > 0.03: aff IMU – desel I'cnct OMS to RCS (√RCS Burn Time) THC +X to TGT HP (EOM) or 3.5 x timer at C/O (AOA) SET SPLIT: Go to "GPC" above
I/O ERROR PCM		OI PCMMU PWR – 2(1)

*If XFD, BLDN, or sensor fail, monitor ENG IN P for off-nominal performance

ENT-2a/122/A,O,D,E/A

OMS FAILURES

LEFT OMS

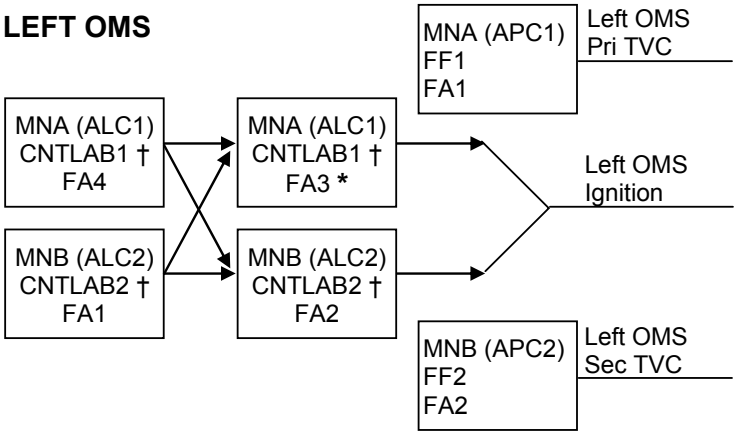

† If CNTL AB1 or AB2 (CA1 or CA2) failed and ign path still exists at OMS fail, assume L(R) OMS ↓ is PRPLT FAIL

* If L(R) P_C failed high during burn, or FA3(4) failed, at L(R) OMS fail, no guidance downmode after L(R) OMS ENG switch OFF (TGO slow, ADI needles in error, 6 ft/s underburn)

RIGHT OMS

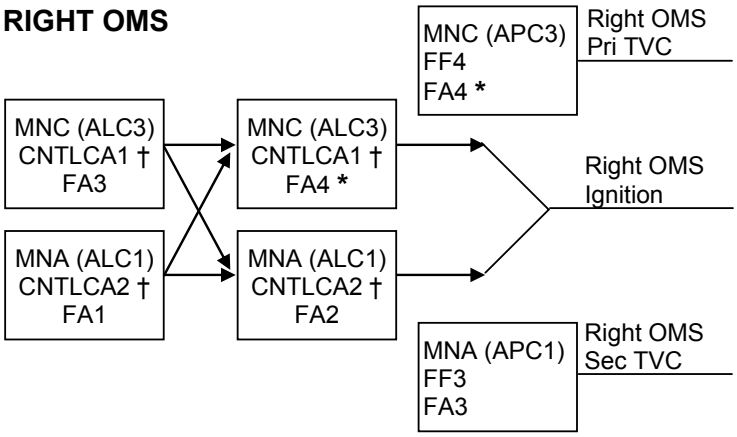

If two FA MDMs lost		
MDMs	Preburn: ENG – OFF	During burn: MAN SHUTDN
1,2	LEFT (TVC)	BOTH
1,3	RIGHT (IGN)	LEFT
1,4	LEFT (IGN)	RIGHT
2,3	LEFT (IGN)	RIGHT
2,4	RIGHT (IGN)	LEFT
3,4	RIGHT (TVC)	BOTH

ENT-2b/122/A,O,D,E/A

1: GNC DEORB MNVR EXEC	2: GNC DEORB MNVR EXEC
3: BFS, GNC SYS SUMM 2	

*** UNDERBURN ***
* Determine ΔHP (CUR HP – TGT HP) *
* Record prebank on ENTRY MANEUVERS Cue Card *

PREBANK TABLE EDW (HA = 190 NM)

EDW									
ΔHP	0	4	8	12	REDES.	13	14	15	REDES.
PREBANK	0	80	105	125	NOR ELS	135	150	170	YYR
NOR						IF NOR NOGO			
G50 ITEM 41 +4 2, √RWY 17 SET TACAN tw (three) 121Y									
ΔHP		10	11	13	14	15	17	19	REDES.
PREBANK		100	105	120	125	130	145	165	YYR
YYR									
G50 ITEM 41 +2 2, √RWY 26 SET TACAN tw (three) 040X									
ΔHP					16	18	20	24	26	28
PREBANK					75	85	95	125	145	180

122 ocfr1

PREBANK TABLE KSC (HA = 190 NM)

KSC									
ΔHP	0	2	4	6	8	10	12	15	REDES.
PREBANK	0	50	75	95	105	115	125	160	YQX
YQX									
G50 ITEM 41 +2 1, √RWY 21 SET TACAN tw (three) 074X									
ΔHP							16	22	25	RED.
PREBANK							95	135	170	INN
INN									
G50 ITEM 41 +2 6, √RWY 06 SET TACAN tw (three) 080X									
ΔHP									26	28
PREBANK									135	180

1: GNC DEORB MNVR EXEC	2: GNC DEORB MNVR EXEC

3: BFS, GNC SYS SUMM 2

C CRT1 **GNC, OPS 303 PRO**

1: GNC DEORB MNVR COAST	2: GNC DEORB MNVR COAST

C CRT1 √Uplinked INRTL EI-5 MM303 ATT with DEL PAD

```
* If no deorbit TGT uplink, enter INRTL EI-5  *
*   MM303 ATT from DEL PAD                     *
* R – ITEM 24 + ___ ___ ___  ___ ___ ___       *
* P – ITEM 25 + ___ ___ ___  ___ ___ ___       *
* Y – ITEM 26 + ___ ___ ___  ___ ___ ___       *
```

Mnvr to EI-5 ATT – ITEM 27 EXEC (*)

```
* If UNDERBURN or no  *
*   DEL PAD, manually *
*   mnvr to LVLH R 001, *
*   Y 358, P per table  *
```

TIME to EI (min)	LVLH PITCH (deg)
20	339
	343
	347
	351
	355
15	359
	3
	7
	11
	15
10	19
	23
	27
	31
	35
5	39

C **OMS GMBL PWRDN (PASS ONLY)**

CRT1 Verify GMBL positions:

	L	R
P	+5.9	+5.9
Y	+6.4	-6.4

GMBL OFF – ITEM 32 EXEC
– ITEM 33 EXEC

FLIGHT CONDITIONS	MANEUVER
V = 7K	G50 √TACAN and GPS, INCORPORATE * If ELS: UHF MODE – G T/R *
V = 5K	ADTA PROBES – DEPLOY (√HEAT) Begin AIL and RUD trim monitoring
M = 3.5	If previous OMS OX TK, He TK, or RCS OX TK leak: G51 VENT DOOR CNTL OPEN – ITEM 43 EXEC
M = 2.7	√APUs HUD PWR (two) – ON
* If M < 2.5; P CSS for ADTA to G&C incorp *	
M = 2.0	Ensure ADTA to G&C else √Theta limits
M < 1.0	√R FLT CNTLR – ON P,R/Y – CSS as reqd √SPDBK CMD vs POS √NWS – 1 Lock Inertia Reels MAX N_Z [ ][.][ ]
M = 0.7	√LG EXTD ISO VLV – OP
h = 15K	√MLS
h = 10K	√A/L (KSC – Tabs, Visors, Suit O2)
h = 2K	LDG GEAR ARM pb – push (ARM lt on)
h = 300	LDG GEAR DN pb – push (DN lt on)
MAIN GEAR TD	√SPDBK – 100%
V = 195 KEAS	DRAG CHUTE ARM, DPY pb (two) – push (simo) (All lts on)
V = 185 KEAS	DEROTATE
NOSE GEAR TD	SRB SEP – MAN/AUTO and depress pb √Auto Load Relief √HYD BK ISOL VLV (three) – OP
MIDFIELD and V < 140 KGS	BRAKE as required (8-10 fps^2, -0.25 to -0.3G)
* If 5K' remaining and V > 140 KGS – MAX BRAKING *	
V = 60 KGS	DRAG CHUTE JETT pb – push (JETT1,JETT2 lt on)
V = 40 KGS	BRAKE < 6 fps^2 (-0.2G) (Antiskid cutout)
WHEEL STOP	Go to ENT C/L, POST LANDING PROCEDURES

ENT-6b/122/E/A
(Partial)

This Page Intentionally Blank

DRAG CHUTE DEPLOY

MCC Call	Flight Condition
Early	Main Gear TD
NOMINAL	**195 KEAS**
Late	Post-Nose Gear TD Xwind DTO
Emergency Only	No Deploy Except CDR call
NO DEPLOY prior to MGTD > 230 KEAS < 80 KGS Xwind > 15 kts	

FAILED TIRE TECHNIQUE

Post-MGTD	P – AUTO
185 KEAS	Deploy drag chute
180 KEAS	√Auto derotation
NGTD	Max RHC roll away from failed tire

50K	/
38K	/
28K	/
20K	/
12K	/
7K	/
3K	/
1K	/
SURF	/

ENT-6b/122/E/A
(Partial)

This Page Intentionally Blank

ENTRY ALPHA

VR	α ref			R	H	Ḣref	Rref
25	HI	40	LO	4432	400		
24	HI	40	LO	2625	248	-46	L79
23	43	40	37	2156	240	-63	69
22	43	40	37	1797	233	-83	63
21	43	40	37	1514	226	-105	60
20	43	40	37	1290	219	-123	59
19	43	40	37	1114	213	-146	60
18	43	40	37	978	207	-168	R60
17	43	40	37	859	201	-187	61
16	43	40	37	767	193	-196	63

KSC 15

MAX L/D	
M	α
3	17
2	15
1	12

(122 OCFR1 CY)

HOOK VELCRO

ASC-14b/122/A,E/A

HOOK VELCRO

HOOK VELCRO

15	43	40	37	684	187	-118	64
14	43	40	37	612	182	-127	62
13	43	40	37	544	178	-137	60
12	43	40	37	482	173	-153	58
11	42	39	36	425	168	-195	57
10	41	38	35	374	162	-174	L51
9	39	36	33	326	158	-207	44
8	37	34	31	278	150	-238	40
7	33	30	27	229	140	-266	39
6	30	27	24	185	129	-271	40
5	26	23	20	141	116	-273	40
4	22	19	18	106	103	-264	R42
3	19	16	15	74	90	-248	39
2.5		14		61	81	-257	
2		14		50	76	-260	
1.5		11		39	69	-308	
1		9		28	54	-263	

HOOK VELCRO

This Page Intentionally Blank

1:	2:
3:	

POST LANDING PAYLOAD ACTIVITIES

N/A

This Page Intentionally Blank

ENTRY CUE CARD CONFIG

DEORBIT BURN FLIGHT RULES
ONE-ORBIT LATE AVAILABLE ENT-1a/122/D/A

	FAILURE	PRE TIG Delay (max) One Orbit	PRE TIG Delay (max) One Day	POST TIG Stop Burn, > Safe HP
	APU/HYD			
1	No APU operating	... X ...	.....	
	DPS			
2	RDNT fail, Split	.....	...X....	X
3	1 GPC	... X ...	.....	
4	BFS	.....	...X....	
5	GPC BITE (Multiple GPCs)	.....	...X....	
	ECLS			
6	2 Av Bay Fans in Bay 3	... X ...	.....	
7	2 Av Bay Fans in Bay 1 or 2	.....	...X....	
	ELEC			
8	H2 Manf or TK leak (not in depleted tk(s) _____)	... X ...	.....	
9	2 MN Buses	.....	...X....	X
10	CNTL CA1 (No BFS Engage in GPC 3/5)	.....	...X....	
11	Multi Φ AC BUS (unshorted)	... X ...	.....	
	GNC			
12	1 MLS (if reqd), IMU, or TACAN (C-band not avail)	... X ...	.....	
13	IMU Dilemma	.....	...X....	X
14	RHC Dilemma	... X ...		
15	2 IMUs (Not targeting EDW/NOR)	.....	...X....	
16	2 ADTAs (Winds>80kts or Dynamic Wx)	... X ...	.....	
	HOOK VELCRO			**HOOK VELCRO**
17	2 FCS Channels (same surface) (Not targeting NOR/EDW)	... X ...	.....	
18	2 AAs, RGAs (Not targeting EDW/NOR)	... X ...	.....	
	OMS			
19	Prplt Tank	... X ...	.....	.....X ①
20	Ignition (neither eng ignites)	... X ...	.....	
21	Both OMS Eng fail	.....	.....	.....X ②
22	Prplt Lk after LAST LOS	perigee adjust		
	AFT RCS			
23	2 jets, same direction, same pod	... X ...	.....	
24	Prplt Lk after LAST LOS	... X ...	.....	
25	1 AFT RCS PROP TK fail	... X ...	.....	
	COMM			
26	MCC GO for DEORBIT not rcvd	.....	...X....	

① Stop Burn > OMS PRPLT FAIL HP (Ref: DEL PAD/BURN Card)
② Stop Burn > OMS ENG FAIL HP (Ref: DEL PAD/BURN Card)

(reduced copy)

TOP
BACK OF 'DEORBIT BURN FLIGHT RULES'

DEORBIT BURN FLIGHT RULES
ONE-ORBIT LATE NOT AVAILABLE ENT-1b/122/D/A

	FAILURE	PRE TIG Delay (max) One Day	POST TIG Stop Burn, > Safe HP
	APU/HYD		
1	No APU operating	X	
	DPS		
2	RDNT fail, Split	X	X
3	1 GPC		
4	BFS	X	
5	GPC BITE (Multiple GPCs)	X	
	ECLS		
6	2 Av Bay Fans in Bay 3		
7	2 Av Bay Fans in Bay 1 or 2	X	
	ELEC		
8	H2 Manf or TK leak (not in depleted tk(s) _____)	X	
9	2 MN Buses	X	X
10	CNTL CA1 (No BFS Engage in GPC 3/5)	X	
11	Multi Φ AC BUS (unshorted)		
	GNC		
12	1 MLS (if reqd), IMU, or TACAN (C-band not avail)	X	
13	IMU Dilemma	X	X
14	RHC Dilemma	X	
15	2 IMUs (Not targeting EDW/NOR)	X	
16	2 ADTAs (Winds>80kts or Dynamic Wx)	X	
	HOOK VELCRO		**HOOK VELCRO**
17	2 FCS Channels (same surface) (Not targeting NOR/EDW)	X	
18	2 AAs, RGAs (Not targeting EDW/NOR)	X	
	OMS		
19	Prplt Tank	X	X ①
20	Ignition (neither eng ignites)	X	
21	Both OMS Eng fail		X ②
22	Prplt Lk after LAST LOS	perigee adjust	
	AFT RCS		
23	2 jets, same direction, same pod	X	
24	Prplt Lk after LAST LOS	X	
25	1 AFT RCS PROP TK fail	X	
	COMM		
26	MCC GO for DEORBIT not rcvd	X	

① Stop Burn > OMS PRPLT FAIL HP (Ref: DEL PAD/BURN Card)
② Stop Burn > OMS ENG FAIL HP (Ref: DEL PAD/BURN Card)

(reduced copy)

TOP

HOOK VELCRO

DEORBIT BURN (RCS)

HOOK VELCRO

√MM302 √RCS SEL
√RCS BURN CONFIG (L OMS I'CNCT)
L,R OMS He PRESS/VAP ISOL A (two) – OP
. . . . . Wait 2 sec . . . . . B (two) – OP
√DAP – INRTL/DISC
ADI – LVLH(REF)/MED/MED
FLT CNTLR PWR (two) – ON

TIG THC +X (No Deorbit > TIG + [ ] : [ ][ ])
Maintain PITCH ATT ERR ± 3°
Monitor ΔVTOT:
RCS I'CNCT TK SW at ΔVTOT = [ ][ ][ ]
R OMS XFEED (two) – OP
L OMS XFEED (two) – CL

OMS PRPLT LOW
AFT RCS RECONFIG AT ΔVTOT = [ ][ ][ ]
RCS COMPLETION

OMS PRPLT FAIL (MULTIPLE JETS FAIL OFF):
Secure aff OMS
STOP BURN:
SAFE HP [ ][ ] APUs – SHUT DN
CONTINUE BURN:
ITEM 18 +0 EXEC
[G23] Resel jets
Interconnect good OMS to RCS
THC +X (√OMS% vs RCS Burn Time)
AFT RCS RECONFIG
RCS COMPLETION

RCS +X JET FAIL OFF:
STOP BURN:
SAFE HP [ ][ ] APUs – SHUT DN
CONTINUE BURN:
ITEM 18 +0 EXEC
[G23] Resel jets

ENT-3a/D/L

HINGE

(reduced copy)

TOP
BACK OF 'ENTRY MANEUVERS'

HOOK VELCRO

FLIGHT CONDITIONS	MANEUVER
V = 7K	G50 √TACAN and GPS, INCORPORATE * If ELS: UHF MODE – G T/R *
V = 5K	ADTA PROBES – DEPLOY (√HEAT) Begin AIL and RUD trim monitoring
M = 3.5	If previous OMS OX TK, He TK, or RCS OX TK leak: G51 VENT DOOR CNTL OPEN – ITEM 43 EXEC
M = 2.7	√APUs HUD PWR (two) – ON
* If M < 2.5; P CSS for ADTA to G&C incorp *	
M = 2.0	Ensure ADTA to G&C else √Theta limits
M < 1.0	√R FLT CNTLR – ON P,R/Y – CSS as reqd √SPDBK CMD vs POS √NWS – 1 Lock Inertia Reels MAX N_Z [ ] . [ ]
M = 0.7	√LG EXTD ISO VLV – OP
h = 15K	√MLS
h = 10K	√A/L (KSC – Tabs, Visors, Suit O2)
h = 2K	LDG GEAR ARM pb – push (ARM lt on)
h = 300	LDG GEAR DN pb – push (DN lt on)
MAIN GEAR TD	√SPDBK – 100%
V = 195 KEAS	DRAG CHUTE ARM, DPY pb (two) – push (simo) (All lts on)
V = 185 KEAS	DEROTATE
NOSE GEAR TD	SRB SEP – MAN/AUTO and depress pb √Auto Load Relief √HYD BK ISOL VLV (three) – OP
MIDFIELD and V < 140 KGS	BRAKE as required (8-10 fps^2, -0.25 to -0.3G)
* If 5K' remaining and V > 140 KGS – MAX BRAKING *	
V = 60 KGS	DRAG CHUTE JETT pb – push (JETT1,JETT2 lt on)
V = 40 KGS	BRAKE < 6 fps^2 (-0.2G) (Antiskid cutout)
WHEEL STOP	Go to ENT C/L, POST LANDING PROCEDURES

DRAG CHUTE DEPLOY

MCC Call	Flight Condition
Early	Main Gear TD
NOMINAL	**195 KEAS**
Late	Post-Nose Gear TD Xwind DTO
Emergency Only	No Deploy Except CDR call
NO DEPLOY prior to MGTD > 230 KEAS < 80 KGS Xwind > 15 kts	

FAILED TIRE TECHNIQUE

Post-MGTD	P – AUTO
185 KEAS	Deploy drag chute
180 KEAS	√Auto derotation
NGTD	Max RHC roll away from failed tire

50K	/
38K	/
28K	/
20K	/
12K	/
7K	/
3K	/
1K	/
SURF	/

ENT-6b/122/E/A

HOOK VELCRO

HOOK VELCRO

HOOK VELCRO

HOOK VELCRO

(reduced copy)

TOP

HOOK VELCRO

HOOK VELCRO

ENTRY NO-GO CHECKLIST

FAILURE OF:	AERO PTI DTO	AUTO FCS MODE	XWIND DTO ①
APU/HYD: 1 APU			X
2 APUs	X		X
DISPLAYS: 2 ADIs	X		
CDR HUD			X ②
CONTROLLERS:			
RHC: 1L			X
2L & 2R	X		X
RPTA: 2L or 2R			X
GNC: 2 AAs (LAT)	X		X
2 AAs (NORM)	X(M < 2.5)	X ③	
2 RGAs	X		X
2 R DDU PWR SPLY			X
2 IMU (or 1 IMU + BITE)	X		X
2 ADTAs			X
ADTA NOT INCORP OR DLMA		X (M < 2)	
MLS NOT INCORP		X (< 6K ft)	
2 FCS CH (same surface)	X		X
DPS: 1 GPC (not restrung)			X ④
2 GPC (restrung)	X		
2 GPC (not restrung)	X	X ③	X
1 FF			X ④
2 FF	X	X ③	X
2 FA	X		X
RCS: LEAK (AFT – during ENT)	X		
2 YAW JETs (same side)	X		
MIN RCS QTY	X		
TRIM: All > ± 2.0 deg	X		
DOWNMODE:			
FCS problem	X	X	X
AOA	X		X
PLB: PLBD Latch Gang	X		
LDG/DECEL:			
Tire Leak			X
HYD BRAKE ISOL VLV			X
< 100% Brakes			X
NWS			X
ENERGY – OFF NOMINAL:			
Roll Ref Alert	X		
Above Upper Traj Line	X		
MCC GCA, or VEL & PSN update	X	X	
No A/L by 6K ft		X	
DATA: SOLID STATE RECORDERS	X (LOS)		
XWIND:			
< 10 Knots Peak			X
> 15 Knots Peak			X
> 10 Knots Gust			X
GROUND SYSTEMS:			
No Runway Aim Point			X

NOTES

① Consider runway redesignation (M > 6) to avoid Xwind landing
② GO if PAPI and BALL BAR available
③ Pitch AUTO mode NO-GO for M < 2.5
④ GO if only string 4 affected

HOOK VELCRO

HOOK VELCRO

TIME to EI (min)	LVLH PITCH (deg)
20	339
	343
	347
	351
	355
15	359
	3
	7
	11
	15
10	19
	23
	27
	31
	35
5	39

HOOK VELCRO

HOOK VELCRO

HOOK VELCRO

HOOK VELCRO

ENT-7a/E/K

(reduced copy)

FAB USE ONLY FS CC 8-18 ENT/122/FIN

TOP

HOOK VELCRO

HOOK VELCRO

DEORBIT BURN MONITOR

OMS TEMP*	L R	
FU IN P	≥ 230 230	OMS ENG FAIL
	≤ 214 212	OMS PRPLT FAIL
or No FU IN P		
OMS PC* & OMS ↓ (BFS: √accel)		
ENG VLV 1 or 2 < 70		OMS ENG FAIL
or OX IN P > 227		
OX IN P ≤ 227 or No OX IN P		OMS PRPLT FAIL
OMS OX/FU TK P (√ENG IN P)		
OX/FU LOW		He PRESS/VAP ISOL (two) – OP If aff TK P not incr: He PRESS/VAP ISOL (two) – CL At PC < 72 or OMS TEMP: OMS PRPLT FAIL
OX & FU HIGH		He PRESS/VAP ISOL (two) – CL Cycle He A(B) to maintain TK P 234-284
OMS GMBL	PRI fail	L(R) OMS GMBL – SEC (twice)
	SEC fail	If high RCS usage: OMS ENG FAIL
GPC	**1(4) &** Burning OMS aff	aff GPC PWR – OFF If SEC GMBL avail: aff MDM FF 1(4) – OFF,ON L(R) OMS GMBL – SEC (twice)
	SEC GMBL lost	If high RCS usage: OMS ENG FAIL
	2 FAs lost	√MAN SHUTDN
I/O ERROR FA	**1(4)**	L(R) OMS GMBL – SEC
		I/O RESET (if recov: BFS I/O RESET) If high RCS usage: OMS ENG FAIL
	2 FAs lost	√MAN SHUTDN
BCE STRG D		I/O RESET (if recov: >>)
	1(4)	If high RCS usage: L(R) OMS GMBL – SEC (twice)
RM DLMA IMU		
or	**ABOVE SAFE** HP ⇒ [ ][ ]	STOP BURN: OMS ENG(s) – OFF >>
GPC SET SPLIT		
or		
2 MN BUSES	**BELOW SAFE** HP ⇒	IMU DLMA: After C/O: √timer [G21] If any IMU ACC > 0.03: aff IMU – desel I'cnct OMS to RCS (√RCS Burn Time) THC +X to TGT HP (EOM) or 3.5 x timer at C/O (AOA) SET SPLIT: Go to "GPC" above
I/O ERROR PCM		OI PCMMU PWR – 2(1)

*If XFD, BLDN, or sensor fail, monitor ENG IN P for off-nominal performance

ENT-2a/122/A,O,D,E/A

(reduced copy)

TOP
BACK OF 'DEORBIT BURN MONITOR'

HOOK VELCRO

OMS FAILURES

HOOK VELCRO

LEFT OMS

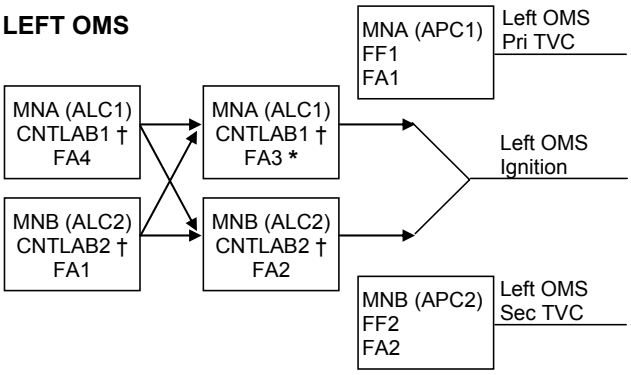

† If CNTL AB1 or AB2 (CA1 or CA2) failed and ign path still exists at OMS fail, assume L(R) OMS ↓ is PRPLT FAIL

* If L(R) P_C failed high during burn, or FA3(4) failed, at L(R) OMS fail, no guidance downmode after L(R) OMS ENG switch OFF (TGO slow, ADI needles in error, 6 ft/s underburn)

RIGHT OMS

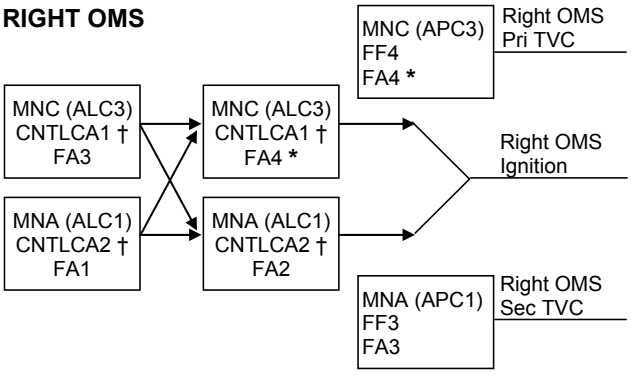

If two FA MDMs lost		
MDMs	Preburn: ENG – OFF	During burn: MAN SHUTDN
1,2	LEFT (TVC)	BOTH
1,3	RIGHT (IGN)	LEFT
1,4	LEFT (IGN)	RIGHT
2,3	LEFT (IGN)	RIGHT
2,4	RIGHT (IGN)	LEFT
3,4	RIGHT (TVC)	BOTH

ENT-2b/122/A,O,D,E/A

(reduced copy)

Space Shuttle Program
FLIGHT DATA FILE

JSC-48020-122
FINAL

ENTRY CHECKLIST

STS
122

Flight Cover (trim bottom to expose tabs)