Space Shuttle Program
FLIGHT DATA FILE

JSC-48005-122

Ascent Checklist

STS-122

Mission Operations Directorate
Flight Design and Dynamics Division

Final
October 10, 2007

National Aeronautics and
Space Administration

Lyndon B. Johnson Space Center
Houston, Texas

Verify this is the correct version for the pending operation (training, simulation or flight).
Electronic copies of FDF books are available. URL: http://mod/jsc/nasa.gov/do3/FDF/index.html

ASCENT C/L STS-122	FINAL (Oct 10, 2007)

PCN-1 (Nov 16, 2007) Sheet 1 of 1

List of Implemented Change Requests (482s):

ASC-1803A MULTI-1810
ASC-1808A
ASC-1809
ASC-1810

Incorporate the following:

1. Replace v thru viii
2. Replace FB 2-7 and FB 2-8, FB 2-15 and FB 2-16
3. Replace 9-13 and 9-14, 9-23 and 9-24, 9-27 and 9-28

Prepared by: Allison McCagg 11/13/07
Book Manager

Tom Schmidt 11/13/07
Lead Ascent GPO

Approved by:
Chief, Ascent/Descent Dynamics Branch

Encl: 14 pages

File this PCN immediately behind the front cover as a permanent record

JSC-48005-122

MISSION OPERATIONS DIRECTORATE

ASCENT CHECKLIST
STS-122

FINAL
October 10, 2007

PREPARED BY:

Allison R. McCagg
Book Manager

Michael J. Menard
VITO Lead

APPROVED BY:

Tom Schmidt
Lead Ascent GPO

P. J. Bertsch
Chief, Ascent/Descent Dynamics Branch

This document is under the configuration control of the Crew Procedures Control Board (CPCB). All proposed changes must be submitted via FDF Workflow Crew Procedure Change Request (CR) to DO3/FDF Manager.

Additional distribution of this book, for official use only, may be requested in writing to DO3/PMO Administrator. The request must include justification and requester's name, organization, position, and phone number. Contractor requests are made through the NASA or DOD organization supported. Deletions, reduction in quantity, or change of address may be submitted to DO3/FDF Management Office, 281-244-1184.

ASC/122/FIN

Incorporates the following:		
482#:	ASC-1801A	MULTI-1807

AREAS OF TECHNICAL RESPONSIBILITY

Book Manager	DM4/A. McCagg	281-483-7752
Switch List	CA4/S. Kieffer	281-244-8333
Entry	DM4/M. Trump	281-483-8029
	G. Jordan-Moore	281-483-1261

NOTES

1. The STS-122 trajectory data in this checklist is based on the STS-122 One Cycle to Flight R1 load and the December environment.

2. The Handover/Ingress Switch List gives the vehicle configuration at LCC/MCC handover (SRB Ignition) and flight crew ingress (T-3:00). If there is a switch position difference between ingress and handover, the ingress position will be boxed beside the handover position.

3. The time reference used in the Prelaunch procedures is the T- (Time to Launch) that LCC uses. This time does not reflect planned holds. The second time referenced in parentheses reflects the planned holds. The mission elapsed time (MET) has MET = 0 at SRB ignition.

4. Normal Flight Procedures are for liftoff through the OMS 2 burn.

5. The Abort to Orbit (ATO) procedures and the Backup Flight System (BFS) procedures are integrated into the appropriate parts of this checklist.

6. AOA procedures terminate with ENTRY MANEUVERS Cue Cards.

7. Ascent Flip Book for the CDR and PLT will be fabricated from the FB pages in section 2.

8. Ascent related cue cards are contained in this document. The cue cards are listed in the Ascent Cue Card section. Some cards are printed in the body of the checklist for MS use and also in the Cue Card Config section for reference of crop marks and fabrication instructions.

9. Mission STS-122 is flown with vehicle OV104.

This Page Intentionally Blank

ASCENT CHECKLIST
STS-122

LIST OF EFFECTIVE PAGES

FINAL 10/10/07
PCN-1 11/16/07

Sign Off	*	122/FIN	FB 2-7		122/FIN
ii	*	122/FIN	FB 2-8		122/FIN 1
iii	*	122/FIN	FB 2-9		122/FIN
iv	*	122/FIN	FB 2-10		122/FIN
v	*	122/FIN 1	FB 2-11		122/FIN
vi	*	122/FIN 1	FB 2-12	☒	122/FIN
vii	*	122/FIN 1	FB 2-13		122/FIN
viii	*	122/FIN	FB 2-14	☒	122/FIN
ix	*	122/FIN	FB 2-15		122/FIN 1
x	*	122/FIN	FB 2-16		122/FIN
xi		122/FIN	FB 2-17		122/FIN
xii		122/FIN	FB 2-18		122/FIN
1-1		122/FIN	FB 2-19		122/FIN
1-2		122/FIN	FB 2-20		122/FIN
1-3		122/FIN	FB 2-21		122/FIN
1-4		122/FIN	FB 2-22		122/FIN
1-5		122/FIN	FB 2-23		122/FIN
1-6		122/FIN	FB 2-24		122/FIN
1-7		122/FIN	FB 2-25		122/FIN
1-8		122/FIN	FB 2-26		122/FIN
1-9		122/FIN	2-27		122/FIN
1-10	☒	122/FIN	2-28		122/FIN
1-11		122/FIN	2-29		122/FIN
1-12		122/FIN	2-30		122/FIN
1-13		122/FIN	2-31		122/FIN
1-14		122/FIN	2-32		122/FIN
2-1		122/FIN	2-33		122/FIN
FB 2-2		122/FIN	2-34		122/FIN
FB 2-3		122/FIN	2-35	*	122/FIN
FB 2-4		122/FIN	2-36	*	122/FIN
FB 2-5		122/FIN	2-37	*	122/FIN
FB 2-6		122/FIN	2-38	*	122/FIN

* – Omit from flight book
☒ – Prelift-off information required

2-39 ..... * 122/FIN
2-40 ..... * 122/FIN
2-41 ..... * 122/FIN
2-42 ..... * 122/FIN
2-43 ..... * 122/FIN
2-44 ..... * 122/FIN
2-45 ..... * 122/FIN
2-46 ..... * 122/FIN
3-1 ..... 122/FIN
3-2 ..... 122/FIN
3-3 ..... 122/FIN
3-4 ..... 122/FIN
3-5 ..... 122/FIN
3-6 ..... 122/FIN
3-7 ..... 122/FIN
3-8 ..... 122/FIN
4-1 ..... 122/FIN
4-2 ..... 122/FIN
4-3 ..... 122/FIN
4-4 ..... 122/FIN
5-1 ..... 122/FIN
5-2 ..... 122/FIN
5-3 ..... 122/FIN
5-4 ..... 122/FIN
6-1 ..... 122/FIN
6-2 ..... 122/FIN
6-3 ..... 122/FIN
6-4 ..... 122/FIN
6-5 ..... 122/FIN
6-6 ..... 122/FIN
6-7 ..... 122/FIN
6-8 ..... 122/FIN
6-9 ..... 122/FIN
6-10 ..... 122/FIN
6-11 ..... 122/FIN
6-12 ..... 122/FIN
6-13 ..... 122/FIN
6-14 ..... 122/FIN
6-15 ..... 122/FIN
6-16 ..... 122/FIN
6-17 ..... 122/FIN
6-18 ..... 122/FIN
6-19 ..... 122/FIN
6-20 ..... 122/FIN
6-21 ..... 122/FIN
6-22 ..... 122/FIN
6-23 ..... 122/FIN
6-24 ..... 122/FIN
6-25 ..... 122/FIN
6-26 ..... 122/FIN
6-27 ..... 122/FIN
6-28 ..... 122/FIN
6-29 ..... 122/FIN
6-30 ..... 122/FIN
6-31 ..... 122/FIN
6-32 ..... 122/FIN
6-33 ..... 122/FIN
6-34 ..... 122/FIN
6-35 ..... 122/FIN
6-36 ..... 122/FIN
6-37 ..... 122/FIN
6-38 ..... 122/FIN
6-39 ..... 122/FIN
6-40 ..... 122/FIN
7-1 ..... 122/FIN
7-2 ..... 122/FIN
7-3 ..... 122/FIN
7-4 ..... 122/FIN
7-5 ..... 122/FIN
7-6 ..... 122/FIN
7-7 ..... 122/FIN
7-8 ..... 122/FIN
7-9 ..... 122/FIN
7-10 ..... 122/FIN
8-1 ..... 122/FIN
8-2 ..... 122/FIN
8-3 ..... ☒ 122/FIN
8-4 ..... ☒ 122/FIN
8-5 ..... ☒ 122/FIN
8-6 ..... ☒ 122/FIN

* – Omit from flight book
☒ – Prelift-off information required

8-7 ..... ☒ 122/FIN
8-8 ..... 122/FIN
9-1 ..... * 122/FIN
9-2 ..... * 122/FIN
9-3 ..... * 122/FIN
9-4 ..... * 122/FIN
9-5 ..... * 122/FIN
9-6 ..... * 122/FIN
9-7 ..... * 122/FIN
9-8 ..... * 122/FIN
9-9 ..... * 122/FIN
9-10 ..... * 122/FIN
9-11 ..... * 122/FIN
9-12 ..... * 122/FIN
9-13 ..... * 122/FIN 1
9-14 ..... * 122/FIN
9-15 ..... * 122/FIN
9-16 ..... * 122/FIN
9-17 ..... * 122/FIN
9-18 ..... * 122/FIN
9-19 ..... * 122/FIN
9-20 ..... * 122/FIN
9-21 ..... * 122/FIN
9-22 ..... * 122/FIN
9-23 ..... * 122/FIN
9-24 ..... * 122/FIN 1
9-25 ..... * 122/FIN
9-26 ..... * 122/FIN
9-27 ..... * 122/FIN 1
9-28 ..... * 122/FIN 1
10-1 ..... * 122/FIN
CC 10-2..... * 122/FIN
CC 10-3..... * 122/FIN
CC 10-4..... * 122/FIN
(A)CC 10-5.... * 122/FIN
(A)CC 10-6.... * 122/FIN
(B)CC 10-5.... * 122/FIN
(B)CC 10-6.... * 122/FIN
(C)CC 10-5.... * 122/FIN
(C)CC 10-6.... * 122/FIN
CC 10-7 .....* 122/FIN
CC 10-8 .....* 122/FIN
CC 10-9 .....* 122/FIN
CC 10-10 .....* 122/FIN
CC 10-11 .....* 122/FIN
CC 10-12 .....* 122/FIN
CC 10-13 .....* 122/FIN
CC 10-14 .....* 122/FIN
CC 10-15 .....* 122/FIN
CC 10-16 .....* 122/FIN
CC 10-17 .....* 122/FIN
CC 10-18 .....* 122/FIN
CC 10-19 .....* 122/FIN
CC 10-20 .....* 122/FIN
CC 10-21 .....* 122/FIN
CC 10-22 .....* 122/FIN
CC 10-23 .....* 122/FIN
CC 10-24 .....* 122/FIN
CC 10-25 .....* 122/FIN
CC 10-26 .....* 122/FIN
CC 10-27 .....* 122/FIN
CC 10-28 .....* 122/FIN
CC 10-29 .....* 122/FIN
CC 10-30 .....* 122/FIN
CC 10-31 .....* 122/FIN
CC 10-32 .....* 122/FIN
CC 10-33 .....* 122/FIN
CC 10-34 .....* 122/FIN
CC 10-35 .....* 122/FIN
CC 10-36 .....* 122/FIN
CC 10-37 .....* 122/FIN
CC 10-38 .....* 122/FIN
CC 10-39 .....* 122/FIN
CC 10-40 .....* 122/FIN
CC 10-41 .....* 122/FIN
10-42.....* 122/FIN

☒ – Prelift-off information required
* – Omit from flight book

ASCENT CUE CARDS

Title	Ref. Page	Card No.
ADI ERROR/RATE SWITCH		
ASCENT (Front)	CC 10-2	ASC-1a/A,E/H
ENTRY (Back)	CC 10-2	ASC-1b/A,E/E
ASCENT/ENTRY SPEC		
(Front)	CC 10-3	ASC-2a/A,E/E
(Back)	CC 10-3	ASC-2b/A,E/D
SPEED BRAKE CMD		
(Front)	CC 10-4	ASC-3a/A,E/E
(Back)	CC 10-4	ASC-3b/A,E/D
CONTINGENCY ABORT		
CDR (Front)	(A)CC 10-5	ASC-30a/122/A/A
RTLS CONTINGENCY		
CDR (Back)	(A)CC 10-6	ASC-30b/122/A/A
CONTINGENCY ABORT		
PLT (Front)	(B)CC 10-5	ASC-31a/122/A/A
RTLS CONTINGENCY		
PLT (Back)	(B)CC 10-6	ASC-31b/122/A/A
CONTINGENCY ABORT		
MS (Front)	(C)CC 10-5	ASC-32a/122/A/A
RTLS CONTINGENCY		
MS (Back)	(C)CC 10-6	ASC-32b/122/A/A
OMS 2 BURN MONITOR (Front)	CC 10-7	ASC-5a/122/A,O/A
OMS FAILURES (Back)	CC 10-8	ASC-5b/A,O,E/I
OMS 2/ORBIT OMS BURNS		
(Front)	CC 10-9	ASC-6a/122/A,O/A
OPS 1 RCS BURN (Back)	CC 10-10	ASC-6b/122/A,O/A
ASCENT ADI – NOMINAL		
(Front)	CC 10-11	ASC-14a/122/A/A
ENTRY ALPHA – KSC 15		
(Back)	CC 10-11	ASC-14b/122/A,E/A
AOA DEORBIT BURN (2 ENG)		
(Top/Front)	CC 10-12	ASC-8a/A/E
(Bottom/Front)	CC 10-13	ASC-8aa/122/A/A
AOA DEORBIT BURN (1 ENG)		
(Top/Back)	CC 10-14	ASC-8b/A/B
(Bottom/Back)	CC 10-15	ASC-8bb/122/A/A
AOA DEORBIT BURN (RCS)		
(Top/Front)	CC 10-16	ASC-7a/A/B
(Bottom/Front)	CC 10-17	ASC-7aa/122/A/A
(Top/Back)	CC 10-18	ASC-7b/A/B
(Bottom/Back)	CC 10-19	ASC-7bb/A/B

ZZA TAL REDESIGNATION
(Front)..... CC 10-20 ASC-9a/122/A/A
ECAL – ZZA or MRN or FMI PRIME TAL
(Back) ..... CC 10-21 ASC-9b/122/A/A
MRN TAL REDESIGNATION
(Front)..... CC 10-22 ASC-10a/122/A/A
ECAL – ZZA or MRN or FMI PRIME TAL
(Back) ..... CC 10-23 ASC-10b/122/A/A
FMI TAL REDESIGNATION
(Front)..... CC 10-24 ASC-12a/122/A/A
ECAL – ZZA or MRN or FMI PRIME TAL
(Back) ..... CC 10-25 ASC-12b/122/A/A
ASCENT/ABORT SUMMARY
(Front)..... CC 10-26 ASC-11a/122/A/A
(Back) ..... CC 10-26 ASC-11b/A/C
EMERGENCY EGRESS
(Front)..... CC 10-27 ASC-15a/A,E/I
ACES TROUBLESHOOTING
(ASCENT/ENTRY) (Back) ..... CC 10-28 ASC-15b/A,E/E
ESCAPE PANEL EGRESS
(Front)..... CC 10-29 ASC-16a/A,E/D
(Back) ..... CC 10-29 ASC-16b/A,E/C
GPC/FCS CHANNEL CONFIG
(Front)..... CC 10-30 ASC-17a/A,O,E/B
(Back) ..... CC 10-30 ASC-17b/A,O,E/B
PANEL R14 – OV104 ONLY
(Front)..... CC 10-31 ASC-22a/A,O,E/D
(Back) ..... CC 10-32 ASC-22b/A,O,E/C
LOC/BREAK-UP..... CC 10-33 ASC-21a/A/D
EMERGENCY EGRESS (OVERSIZED)
(Top/Front) ..... CC 10-34 ASC-25a/A,E/G
(Bottom/Front) ..... CC 10-35 ASC-25aa/A,E/E
(Top/Back)..... CC 10-36 ASC-25b/A,E/D
(Bottom/Back)..... CC 10-37 ASC-25bb/A,E/D
EMERGENCY EGRESS (RUSSIAN)
(Top/Front) ..... CC 10-38 ASC-26a/A,E/E
(Bottom/Front) ..... CC 10-39 ASC-26aa/A,E/D
(Top/Back)..... CC 10-40 ASC-26b/A,E/D
(Bottom/Back)..... CC 10-41 ASC-26bb/A,E/D

PLT & CDR Ascent
Flip Book..... FB 2-2 thru FB 2-26

This Page Intentionally Blank

CONTENTS PAGE

PRELAUNCH PROCEDURES..... 1-1

ASCENT PROCEDURES (FLIP BOOK)..... 2-1
RTLS CDR (CIL) ..... FB 2-12
TAL CDR (CIL)..... FB 2-14
ASCENT/ENTRY CUE CARDS 2-27
ABORT CUE CARDS..... 2-35

POST OMS 1 BURN PROCEDURES..... 3-1

OMS 2 BURN CARDS 4-1

POST OMS 2 BURN PROCEDURES..... 5-1

AOA PADS..... 6-1
AOA PROCEDURES 6-7
AOA DEORBIT BURN AND DEORBIT BURN
MONITOR CARDS..... 6-17
AOA POST DEORBIT BURN..... 6-27
OMS/RCS POST BURN RECONFIG (CIL)..... 6-28
OMS FAILURE 6-37
OMS/RCS ΔV 6-39

OMS TARGETS, COMM COVERAGE, LAND SITES 7-1

WEATHER PADS 8-1

SWITCH LIST 9-1

CUE CARD CONFIG 10-1

This Page Intentionally Blank

PRELAUNCH PROCEDURES

ABORT/RECYCLE PROCEDURES

NOTE
These recycle procedures will be used inside T-5 min

OTC (or NTD) will call for BFS Safing, SRB Safing, APU Shutdn, Heater Reconfig (Aerosurface positioning complete), MPS He Reconfig, OMS/RCS Reconfig, RCS Driver and OMS Safing, and Main Bus Switch Safing as reqd

C **BFS SAFING (On NTD call)**

O6 GPC MODE 5 – HALT
Report BFS Safing complete

MS1 **SRB SAFING (On NTD call – if reqd)**

O17 MEC 1 – OFF
. . . Wait 2 sec, then . . .
MEC 2 – OFF
Report SRB Safing complete

P **APU SHUTDN (On OTC call)**

R2 APU OPER (three) – OFF
FU TK VLV (three) – CL
√Shutdn (HYD PRESS < 200)
CNTLR PWR (three) – OFF
HYD CIRC PUMP (three) – GPC

Report APU SHUTDN complete

C **HEATER RECONFIG (On OTC call)**

L2 FLASH EVAP FDLN HTR (two) – 2

Report Heater Reconfig complete

NOTE

Numerous non-time-critical steps for recycle will be individually called by OTC

P **MPS He RECONFIG (On OTC call)**

R2 MPS He ISOL A,B (six) – GPC
PNEU He ISOL – GPC

Report MPS He Reconfig complete

P **OMS/RCS RECONFIG (On OTC call)**

O8 L,R OMS
√TK ISOL (four) – GPC (tb-OP)
√XFEED (four) – GPC (tb-CL)
FWD RCS
He PRESS (two) – GPC (tb-OP)
√TK ISOL (two) – GPC (tb-OP)
√MANF ISOL 1,2,3,4,5 (five) – GPC (tb-OP)

O7 AFT L,R RCS
He PRESS (four) – GPC (tb-OP)
√TK ISOL (six) – GPC (tb-OP)
√MANF ISOL 1,2,3,4,5 (ten) – GPC (tb-OP)

Report OMS/RCS Reconfig complete

C, MS2 **RCS DRIVER AND OMS SAFING (On OTC call)**

MS2	O14:F	RJD DRIVER (three)	– OFF
		LOGIC (three)	– OFF
		L OMS ENG VLV	– OFF
	O15:F	RJD DRIVER (two)	– OFF
		LOGIC (two)	– OFF
	O16:F	RJD DRIVER (four)	– OFF
		LOGIC (three)	– OFF
		R OMS ENG VLV	– OFF
C	C3	OMS ENG (two)	– OFF

Report RCS Driver and OMS Safing complete

MS2 **MAIN BUS SWITCH SAFING (On OTC call)**

O13:A	cb ESS 1BC MNA CONTR	– op
:C	2CA MNB CONTR	– op
:E	3AB MNC CONTR	– op
O14:B	MNA MNC CONTR	– op
O15:B	MNB MNA CONTR	– op
O16:B	MNC MNB CONTR	– op

Report Main Bus Switch Safing complete

-3:00:00 (Hold)

PRE-INGRESS SW RECONFIG

ASP configures OI PCMMU PWR – 1 *** (C3), ESS BUS SOURCE FC (three) – ON, AC BUS SNSR (three) – OFF (1 sec) then AUTO TRIP (R1), cb APU FU TK VLV ENA (six) – cl (R2). OTC will call: (~2 min) ESS BUS SOURCE FC (three) – OFF, AC BUS SNSR (three) – OFF (1 sec) then MON (R1), cb ESS MN CONTR (three) – cl (O13), cb MN CONTR (three) – cl (O14,O15,O16), cb AC1 H2O LOOP PUMP 1 A/2(three) – op (L4)

PAYLOAD ACTIVATION

A6U PL RETEN PL SEL – 1

NAVAIDS ACTIVATION

O8 MLS CH pb/tw (three) – 6
RADAR ALTM (two) – ON
O7 TACAN CH pb/tw (three) – 059Y
ANT SEL (three) – AUTO
MODE (three) – GPC

If OV104:
A13 GPS PRE AMPL (two) – ON
PWR – ON
√ENCRYPT – NORM

-2:25:00 A (-3:15:00)

INGRESS ORBITER & SEATS

During seat ingress COMM
PWR – ON (L5,R6)
CCU PWR – ON (A11,A15,MO39M)

O5,O9, R10,L9, MO42F AUD VOX SENS (as needed) – adj as reqd
Contact LCC (OTC & NTD) and MCC on A/G 1

1: GNC GPC MEMORY	2: GNC 104 GND IMU CNTL/MON
3: GNC GPC MEMORY	

Install ASC Flip Cards
√Cue Card positions

-2:10:00 (-3:00:00) **POST INGRESS SW RECONFIG**

ASP turns on RCS 1,2,3,4
DRIVERS (eight) (O14,O15,O16),
OMS ENG VLV (two) (O14,O16),
GPC OUTPUT 5 – B/U (O6)

NOTE
ASP doing C/W VOL adjust,
expect MA

-1:57:00 (-2:47:00) **(IDP Equivalent)**

NOTE
IMU preflight align begins

-1:35:00 (-2:25:00) A **LCC ASTRO COMM CHECK**

LCC will contact all crew on A/G 1,
A/G 2, ICOM A, ICOM B then A/A

A **MCC A/G VOICE CHECK**

B A/G 1 Voice Check
O5,O9 L,R AUD A/G 2 (two) – OFF
A/A (two) – OFF
Voice check with MCC

A/G 2 Voice Check
L,R AUD A/G 2 (two) – T/R
1 (two) – OFF
Voice check with MCC

A/A Voice Check
L,R AUD A/A (two) – T/R
A/G 2 (two) – OFF
Voice check with MCC

A SIMO VOICE CHECK (LAUNCH CONFIG)

O5,O9, L,R AUD A/G 1 (two) – T/R
R10,L9, 2 (two) – T/R
MO42F Voice check with MCC

NOTE
Side hatch closure

-1:10:00 C **CABIN LEAK CHECK**
(-2:00:00)

L2 CAB VENT ISOL – OP (tb-OP)
√tb – CL

O1 √CAB PRESS – incr to 16.7 (MA)

NOTE
Flt crew functions from this point on will be initiated by a call from OTC to proceed. Flt crew will report back to OTC after completion

-45:00 C **CABIN VENT REDUNDANCY CONFIG**
(-1:35:00)

NOTE
Vent vlv operation may occur earlier or later at LCC direction

L2 CAB VENT ISOL – CL (tb-CL)
VENT – OP (tb-OP)

-40:00 C **CABIN VENT**
(-1:30:00)

L2 CAB VENT ISOL – OP (tb-OP)
(klaxon)
√tb – OP
O1 √PRESS – decr

1: GNC GPC MEMORY	2: GNC 104 GND IMU CNTL/MON

3: GNC GPC MEMORY

-32:00 (-1:22:00) C **PASS/BFS TRANSFER PREP**

O6 √GPC MODE 5 – STBY (tb-RUN)
C3 √BFC CRT SEL: 3+1
DISP – ON

3: GNC BFS MEMORY

CRT3 PASS/BFS XFER ENA – ITEM 25 EXEC
√ITEM 25 (*)

NOTE
'*' blanks when transfer is complete (~10 min)

-30:00 (-1:20:00) C **OMS GN2 PRESS**

C3 OMS ENG (two) – ARM/PRESS

P **WSB GN2 SUPPLY ACTIVATION**

R2 BLR N2 SPLY (three) – ON

-25:00 (-1:15:00) A **A/G VOICE CHECK**

SIMO VOICE CHECK (LAUNCH CONFIG)
Voice check with MCC

Update Abort Winds Pad, ASC Flip Book, and ALTM, 1-10 (if reqd)

NOTE
Cabin Press Reporting and vent vlv closure may occur earlier or later at LCC direction

-22:00 (-1:12:00) C **REPORT CABIN PRESS**

3: BFS, SM SYS SUMM 1

CRT3,O1 Report cabin pressure (two) to OTC

3: BFS, GNC BFS MEMORY

C **CLOSE VENT VLVS**

L2 CAB VENT ISOL – CL (tb-CL)
VENT – CL (tb-CL)

1: GNC GPC MEMORY	2: GNC 104 GND IMU CNTL/MON
3: BFS, GNC BFS MEMORY	

NOTE
At T-20 there will be a planned 10-min hold

TRAJECTORY UPDATE
√MCC for max rates and trajectory config, 8-7

-20:00 (-1:00:00) **OPS 1 LOAD (IDP Equivalent)**

1: GNC LAUNCH TRAJ	2: GNC LAUNCH TRAJ
1: GNC 0 GPC MEMORY	
1: GNC FAULT	

Report faults other than from unpwrd equipment

CRT1 GNC, SPEC 99 PRO

-18:30 (-58:30) C **BFS TO OPS 1**

3: BFS, GNC FAULT

CRT3 GNC, SPEC 99 PRO
O6 GPC MODE 5 – RUN (tb-RUN)

CRT3 GNC, OPS 101 PRO

3: BFS, GNC LAUNCH TRAJ
3: BFS, GNC FAULT

Report faults other than from unpwrd equipment

CRT3 GNC, SPEC 99 PRO

1: GNC FAULT	2: GNC LAUNCH TRAJ
3: BFS, GNC FAULT	

	2: GNC 50 HORIZ SIT
3: BFS, GNC 50 HORIZ SIT	

-17:00 P **HORIZ SIT CONFIG**
(-57:00)

ALTM – ITEM 9 + [ ][ ][.][ ][ ]

	PASS ITEM		BFS ITEM	
PTI	INH	√1		
TAL SITE (MCC)	3(4,29)	√40	3(4,29)	√40
RTLS SITE	1	√41	1	√41
PRI (MCC)	KSC 15	√3	KSC 15	√3
SEC (MCC)	KSC 33	√4	KSC 33	√4
TAC	-59	√5	-59	√5
RA	blank	√46		
TAEM TGT				
G&N	OVHD	√6	OVHD	√6
HSI	blank		blank	
XEP	NEP	√7	NEP	√7
AIM	NOM (or CLSE)	√8	NOM (or CLSE)	√8
TAC	INH	√20	INH	√20
GPS	INH	√43	INH	√43
DRAG H	AUT	√22	AUT	√22
ADTA H	INH	√26	INH	√26
ADTA TO G&C	INH	√29	AUT	√28
TAC	DELTA	√35		
AIF_G	INH	√48		

1: GNC LAUNCH TRAJ	2: GNC SYS SUMM 1
3: BFS, GNC SYS SUMM 2	

C **CONFIG CONT ABORT YAW STEER**

CRT1 √ITEM 5 [**E**][**N**][**A**]

1: GNC LAUNCH TRAJ	2: GNC SYS SUMM 1
3: BFS, GNC SYS SUMM 2	

-16:00 (-56:00) P **MPS He RECONFIG**

R2 MPS He ISOL A,B (six) – OP
PNEU He ISOL – OP

NOTE
At T-9 there will be a planned 40 min hold

C **√INTERCOM VOICE**

√Intercom voice with all crewmembers prior to entering T-9 hold

WEATHER UPDATE (if reqd)

Update Abort winds, RWY and ALTM setting

-9:00 (~-17:00) P **CLEAR HARDWARE C/W MEMORY**

C3 C/W MEM – CLEAR

-9:00 (~-15:00) MS1

Activate V10 Recorder

-9:00 **'GO FOR LAUNCH' (All)**

C2 EVENT TIMER – START
F7 √TIME ind – counting down

NOTE
GLS starts

-8:00 P **CONNECT ESS BUSES TO FC (GLS √@ T-7:24)**

R1 ESS BUS SOURCE FC (three) – ON

-7:30

NOTE
Access arm retract

√ACES gloves
Cinch down shoulder harness and lap belt

1: GNC LAUNCH TRAJ	2: GNC SYS SUMM 1

3: BFS, GNC SYS SUMM 2

3: BFS, SM SYS SUMM 2

-6:15 P **APU PRE START (GLS √ @ T-5:25)**

R2	√BLR N2 SPLY (three)	– ON
	√PWR (three)	– ON
	√CNTLR/HTR (three)	– A
	√HYD CIRC PUMP (three)	– GPC
	√cb APU FU TK VLV ENA (six)	– cl
	√APU FU TK VLV (three)	– CL
	√AUTO SHTDN (three)	– ENA
	√SPEED SEL (three)	– NORM
	√OPER (three)	– OFF
	HYD MN PUMP PRESS (three)	– LO
	APU CNTLR PWR (three)	– ON
	FU TK VLV (three)	– OP
	√APU/HYD RDY tb (three)	– gray

* If any tb not gray, consult *
* LCC before continuing *

-5:00 P **APU START (GLS √ @ T-4:05)**

R2 APU OPER (three) – START/RUN

HYD/ APU √HYD PRESS ind (three) – LO green

R2 √APU/HYD RDY tb (three) – bp
HYD MN PUMP PRESS (three) – NORM

HYD/ APU √PRESS ind (three) – HI green

R2 CIRC PUMP (three) – OFF

F7 √PRESS lt – off

1: GNC LAUNCH TRAJ	2: GNC SYS SUMM 1
3: BFS, SM SYS SUMM 2	

C **HTR RECONFIG**

L2 FLASH EVAP FDLN HTR (two) – OFF

NOTE

Motion/Vibration may be felt in crew module due to Main Engine gmbl profile cks at -3:25 and move to start at -3:10

-2:30 P **CLEAR C/W MEMORY**

	2: GNC FAULT
3: BFS, GNC FAULT	

Verify no unexpected errors

CRT2, CRT3 GNC, SPEC 99 PRO

	2: GNC SYS SUMM 1
3: BFS, GNC SYS SUMM 1	

C3 C/W MEM – CLEAR

-2:00 A **SUIT PREP**

√Tabs/visor – cl/LES O2 – ON

This Page Intentionally Blank

ASCENT PROCEDURES
(FLIP BOOK)

BAILOUT EGRESS

TAB TITLE BLANK ON THIS PAGE ONLY
TOP
MOUNT ON LEFT SIDE OF BACKBOARD FACING
'BAILOUT MODE 8'

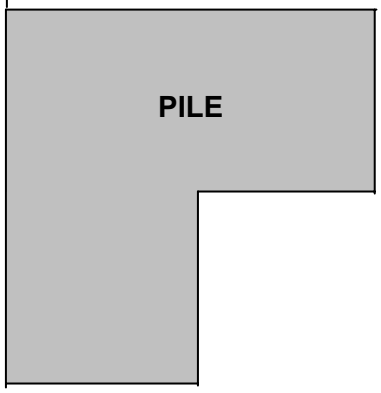

ASCENT FLIP BOOK (EMERGENCY EGRESS)

PRELAUNCH MODE 1

- TABS – RELEASE
- VISOR – CLOSE / LOCK
- SUIT O2 – ON
- GREEN APPLE – PULL
- KNEEBOARDS – REMOVE
- COOLING – DISCONNECT
- SEAT RESTRAINT – RELEASE
- PARACHUTE (four) – RELEASE
- COMM – DISCONNECT
- SUIT O2 – DISCONNECT
- EGRESS SEAT
- HATCH – OPEN MANUALLY
- SLIDEWIRE BASKETS

POST LANDING MODE 5

- TABS – RELEASE
- VISOR – CLOSE / LOCK
- SUIT O2 – ON
- GREEN APPLE – PULL
- KNEEBOARDS – REMOVE
- COOLING – DISCONNECT
- SEAT RESTRAINT – RELEASE
- PARACHUTE (four) – RELEASE
- COMM – DISCONNECT
- (G-SUIT CLIP – PULL)
- SUIT O2 – DISCONNECT
- PLT – EMER PWR DOWN
- EGRESS SEAT
- SLIDE/ESCAPE PANEL

HOOK

ASC

BAILOUT
MODE 8

REPORT POSITION
√MACH < 1.0
P, R/Y – CSS
OPS 305/603 PRO (if reqd)
SB – AUTO; BF – AUTO
FLY 185-195 KEAS, Φ = 0°
ABORT MODE – ATO
ABORT PBI – PUSH
P,R/Y – AUTO
FLT CNTLR PWR (two) – OFF

~50K FT

TABS – RELEASE
VISOR – CLOSE / LOCK
SUIT O2 – ON
GREEN APPLE – PULL

~40K FT

MS3 – VENT CABIN
CDR,PLT SEATS – LOWER
KNEEBOARDS – REMOVE
COOLING – DISCONNECT
SEAT RESTRAINT – RELEASE
D-RING – UNCOVER

~30K FT

MS3 – JETTISON HATCH
COMM – DISCONNECT
(G-SUIT CLIP – PULL)
SUIT O2 – DISCONNECT
EGRESS SEAT
POLE – DEPLOY
D-RING – HOOK UP
BAILOUT

BAILOUT EGRESS

PILE

SYS FLIGHT RULES

	RTLS	TAL
OMS – 2 He TKs		
– 1 OX & 1 FU TKs (diff pods)		X
– 2 OX or 2 FU TKs		X
APU/HYD – Impending loss of all capability	X	X
CABIN LEAK – (-EQ dP/dT > .15)	X	X
CRYO – All O2(H2)	X	X
2 FREON LOOPS ↓ [Accum Qty (↓ and decr) and/or Flow (↓)]	X	X
2 MAIN BUSES ↓	X	
THERMAL WINDOW PANE	X	

NO COMM MODE BOUNDARIES

NEG RETURN (104)	**8100**
PRESS TO ATO (104)	**10600**
SE OPS 3 (109)	**12100**
SE ZZA (104)	**14300**
PRESS TO MECO (104)	**16800**
SE PRESS (104)	**18900**
NEG MRN (2 @ 67)	20000
LAST PRE MECO TAL	23000
LAST TAL	
YJT	19900
YYT	20200
YQX	21900
IKF	23700
INN	23900
FFA	24200
BEJ	24300
MRN, KBO	24400
ESN	24900
ZZA, KKI	25100
FMI	25200
JDG	25300

2 ENG ZZA (104)		**6000**
ABORT TAL ZZA (4)		
EO VI		
SE OPS 3 ZZA (109)	**(4)**	
SE ZZA (104)	**(4)**	
2 ENG MRN (104)		**5900**
ABORT TAL MRN (3)		
EO VI		
SE OPS 3 MRN (109)	**(3)**	
SE MRN (104)	**(3)**	
2 ENG FMI (104)		**6200**
ABORT TAL FMI (29)		
EO VI		
SE OPS 3 FMI (109)	**(29)**	
SE FMI (104)	**(29)**	

ASCENT PROCEDURES

HOOK

OMS 1 TGTING

R180	LVLH
.89M	√P_c → 72%
1.18M	√P_c → 104%
Pc < 50+5 s	√SRB SEP (Backup AUTO SEP 2:21)
	√TMECO
	* If NOT STABLE (10 sec): *
	* NO COMM – CSS & MAN THROT *
MM103+10 s	√OMS assist
	Close suit O2, open visor
3:00	√EVAP OUT (T < 60)
	* If Systems ABORT reqd: *
	* RTLS at 3:40 or *
	* TAL Select prior to 23000 *
	* Otherwise Manual MECO 23700 *
V_I = 13.2K	√Roll Heads Up
	* If Man Throttle (3 eng): *
	* Man Shutdn at 25700 *
	* If 1 eng: *
	* TRAJ √SERC ON *
MECO	√V_I = 25819
MECO+20 s	√ET SEP
	* If 'SEP INH': *
	* ET SEP – MAN *
	* If Rates > .7,.7,.7: *
	* | MPS PRPLT DUMP SEQ – STOP *
	* | Null rates *
	* | ET SEP – SEP *
	* | Post ET Sep -Z xlation: *
	* | MPS PRPLT DUMP SEQ – GPC *
	* If Rates < .7,.7,.7: *
	* Assume Feedline Fail *
	* If VI < 25760 : *
	* OPS 104 – PRO (√BFS 104) *
	* NOTE: Expect – 'Illegal Entry' (PASS) *
	* 'Illegal TIG' (BFS) *
► **MM104+2 s**	If ET Sep complete and HA > 72 :
	+X xlation for 11 sec
	√TGTS
	√ASC PKT for failures
	If OMS 1 not reqd:
	OMS ENG (two) – OFF
	Go to POST OMS 1

PILE

ASC

STS-122 OCFR1 CY
OMS 1/2 TGTING
RENDEZVOUS RECOVERY

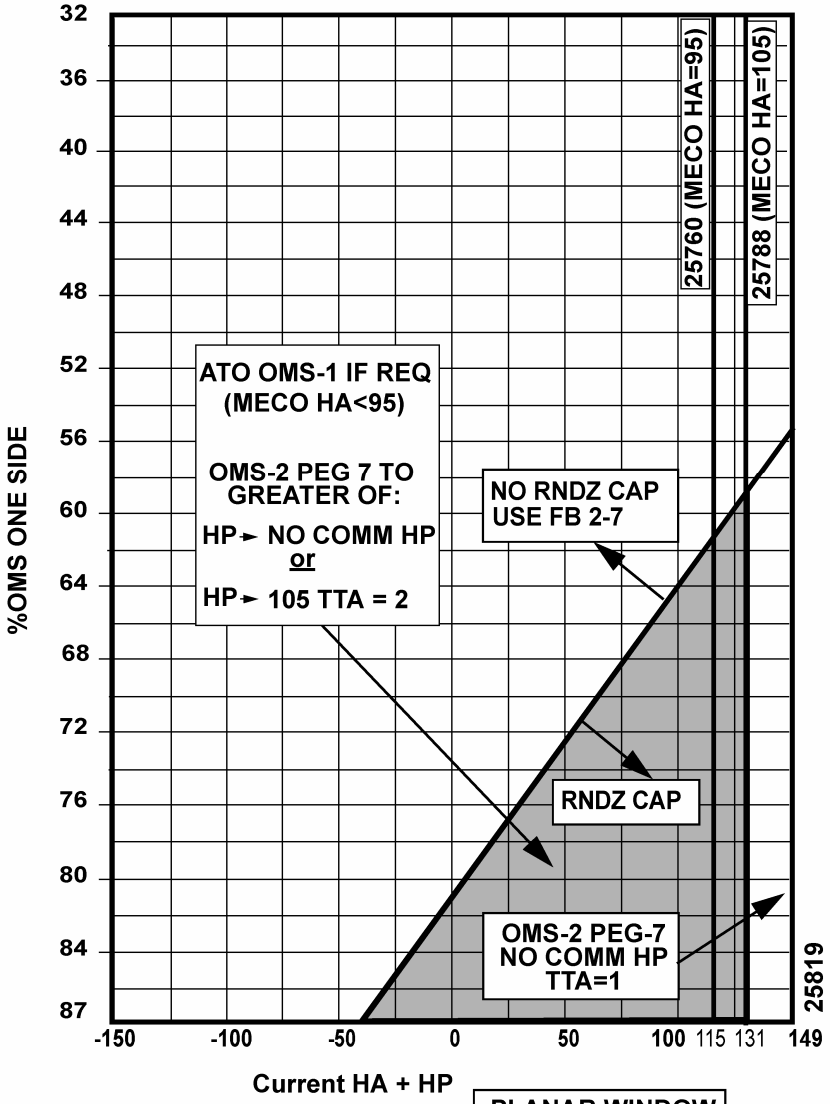

	PLANAR WINDOW	
	1	2
NOMINAL OMS-2 HT		
NO COMM OMS-2 HP		

HOOK

STS-122 OCFR1 CY
OMS 1/2 TGTING

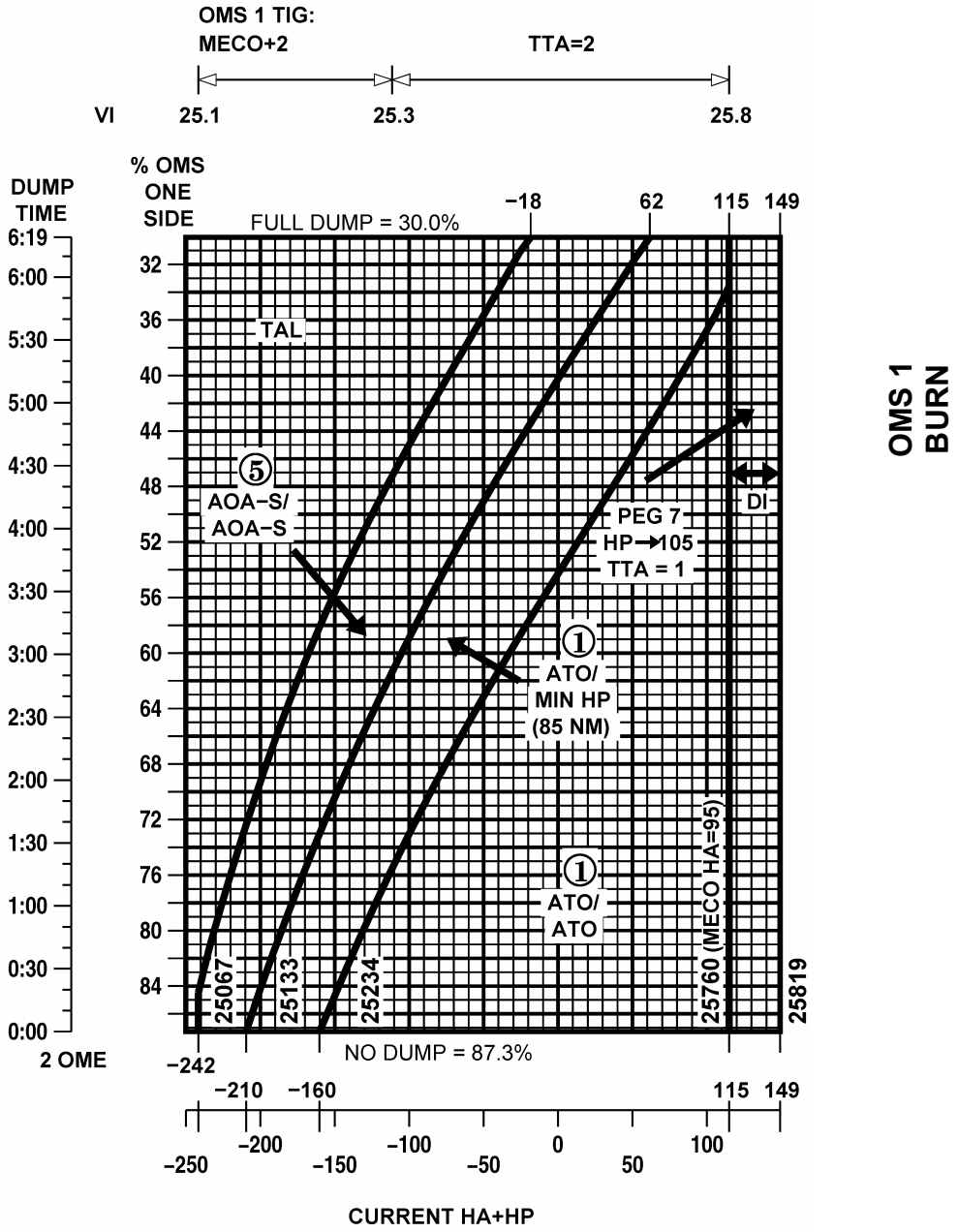

OMS 1
BURN

POST NOMINAL OMS ASSIST	% OMS/SIDE	DUMP TIME
	70	1:56

PILE

OMS 1 BURN

OMS 1 TGTING

```
*  IF TIG LATER THAN MECO + 6 min:
*      MECO + 4 min:  √BDY FLP pb – lt off (MPS dump complete) *
*                     √MCC for APU shutdn (if time permits)    *
*  FEEDLINE FAIL:                                              *
*      Expect 'Illegal Entry' (PASS)/'Illegal TIG' (BFS) @ tgt select *
*        pre ET Sep; input TIG manually & LOAD tgt             *
*      If TIG > MECO + 6 min:                                  *
*          TIG-1:30 or MECO + 6 min (whichever comes first):   *
*              ET SEP – SEP  >>                                *
*      If TIG < MECO + 6 min:                                  *
*          MPS PRPLT DUMP SEQ – STOP                           *
*          TIG-1:30:  ET SEP – SEP                             *
*          Post ET SEP -Z xlation:                             *
*              MPS PRPLT DUMP SEQ – GPC                        *
*  1 OMS ENG FAIL and ΔVTOT > 500:                             *
*      Burn good OMS + I'cnct both OMS to RCS, THC +X at TIG   *
            DAP – AUTO/DISC
           √ENG/TRIM CONFIG, Select TGT (ITEM 35) then TIG
            LOAD TGTS and MNVR
            OMS XFEED (four) – OP
           √CNTLR PWR (two) – ON
           √OMS ENG (two) – ARM/PRESS
            Note ΔVTOT ___ ____ ____     TIG [ | ] : [ | ]
-:15        EXEC
 :00        TIG; start watch (√Pc, ΔVTOT, ENG VLVs)
*  OMS ENG FAIL:                                               *
*      Failed ENG – OFF                                        *
*      If ΔVTOT < 500:                                         *
*          At QTY = 5%, good OMS TK ISOL (two) – CL            *
*      If ΔVTOT > 500:                                         *
*          RCS XFEED (four) – OP                               *
*          RCS TK ISOL (six) – CL                              *
*          THC +X                                              *
*              At first QTY = 5%, good OMS TK ISOL (two) – CL  *
*              At second QTY = 5%, THC – Release               *
*  RCS COMPLETION:                                             *
*      Interconnect to either                                  *
*        OMS that was ENG FAIL                                 *
*      THC +X (OMS% vs RCS ΔV)                                 *
*      OMS TK SW (if reqd)                                     *
CUTOFF
+:02        OMS ENG (two) – OFF
            Trim inplane X,Z residuals < 2 fps
            OMS XFEED (four) – CL (√RCS straightfeed)
```

HOOK

OMS 1 BURN MONITOR

OMS TEMP*	L R	
FU IN P ≥	230 230	OMS ENG FAIL
≤	214 212	OMS ENG FAIL (PRPLT FAIL if 1 Pod Feed)
or No FU IN P		
OMS PC* & OMS ↓ (BFS: √accel)		OMS ENG FAIL
OMS OX/FU TK P (√ENG IN P)		
OX/FU LOW		He PRESS/VAP ISOL (two) – OP If aff TK P not incr: He PRESS/VAP ISOL (two) – CL At Good OMS Qty = 5% OMS XFEED (four) – CL
OX & FU HIGH		He PRESS/VAP ISOL (two) – CL OMS XFEED (four) – CL Cycle He A(B) to maintain TK P 234-284
OMS He TK P LOW (√ OMS/MPS)		At He P < 640 √OMS XFEED (four) – OP Aff OMS TK ISOL (two) – CL At Good OMS Qty = 5% OMS TK ISOL (four) – OP XFEED (four) – CL
OMS N2 REG P HIGH or LOW		OMS ENG – ARM
OMS N2 TK P LOW (√ OMS/MPS)		At N2 TK P < 470: OMS ENG – ARM
OMS GMBL	PRI fail	L(R) OMS GMBL – SEC (twice)
	SEC fail	If high RCS usage: OMS ENG FAIL
GPC	**1(4)** & Burning OMS aff	aff GPC PWR – OFF If SEC GMBL avail: aff MDM FF 1(4) – OFF,ON L(R) OMS GMBL – SEC (twice)
	SEC GMBL lost	If high RCS usage: OMS ENG FAIL
	2 FAs lost	√MAN SHUTDN
I/O ERROR FA	**1(4)**	L(R) OMS GMBL – SEC I/O RESET (if recov: BFS I/O RESET) If high RCS usage: OMS ENG FAIL
	2 FAs lost	√MAN SHUTDN
BCE STRG D		I/O RESET (if recov: >>)
	1(4)	If high RCS usage: L(R) OMS GMBL – SEC (twice)
I/O ERROR PCM		OI PCMMU PWR – 2(1)

*If XFD, BLDN, or sensor fail, monitor ENG IN P for off-nominal performance

OMS 2 TGTING

PILE

OMS 1 BURN

OMS 2 TARGETING

(DIR INSERTION)

FAILURE	OMS 2 TARGET
OMS – 1 OMS ENG 2 N2 TKs (Perform burn Single OMS Eng) – 2 OMS ENGs – 1 or 2 He TKs – 1 PRPLT TK EPS – MNA & B, MNB & C MNA & C ET SEP	PEG 7; TTA = 1 CUTOFF HP = 85
OMS – 2 OX or 2 FU TKs – 1 OX & 1 FU TK diff PODs	AOA-S
2 FREON LOOPS [Accum Qty (↓ and decr) and/or Flow (↓)] 2 H2O LOOPS CABIN LEAK (-EQ dP/dT ≥ .08)	AOA
APU/HYD – impending loss of all capability	AOA
CRYO – All O2(H2)	AOA

OMS

He	%	He	%
4320	86.8	2450	40
4050	80	2050	30
3650	70	1650	20
3250	60	1250	10
2850	50	850	0

HOOK

ATO

NOTE

These tables apply only after ATO OMS 1 burn
(ITGT = 1, AOA to KSC). Assumes OMS and ARCS deorbit

STS-122 OCFR1 CY

DUAL POD - OMS REQUIRED Includes 8.8 % Unusable (4.4 % per pod)				
POST OMS 1 HP	ATO OMS 2 & STEEP D/O BURN (%)	MIN HP OMS 2 & SHALLOW D/O BURN (%)	AOA STEEP D/O BURN (%)	AOA SHALLOW D/O BURN (%)
95	39.3	20.4	34.3	21.2
90	40.7	18.0	32.0	18.0
85	42.3	16.6	29.6	15.1
80	44.2	16.2	27.1	12.4
75	46.3	17.9	24.0	9.4
70	48.1	19.9	21.0	8.8
65	49.2	21.3	18.6	8.8
60	50.1	22.6	17.9	8.8
55	50.5	23.7	18.9	8.8
50	51.1	24.9	18.7	8.8
45	---	26.3	21.3	8.8

SINGLE POD - OMS REQUIRED Includes 4.4 % Unusable				
POST OMS 1 HP	ATO OMS 2 & STEEP D/O BURN (%)	MIN HP OMS 2 & SHALLOW D/O BURN (%)	AOA STEEP D/O BURN (%)	AOA SHALLOW D/O BURN (%)
95	34.9	16.0	29.9	16.8
90	36.3	13.6	27.6	13.6
85	37.9	12.2	25.2	10.7
80	39.8	11.8	22.7	8.0
75	41.9	13.5	19.6	5.0
70	43.7	15.5	16.6	4.4
65	44.8	16.9	14.2	4.4
60	45.7	18.2	13.5	4.4
55	46.1	19.3	14.5	4.4
50	46.7	20.5	14.3	4.4
45	---	21.9	16.9	4.4

RTLS

OMS BLOWDOWN

LEFT OMS GAGE QTY (%)

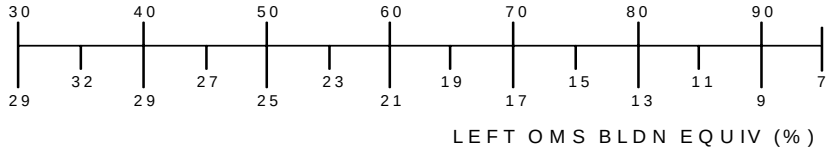

RIGHT OMS GAGE QTY (%)

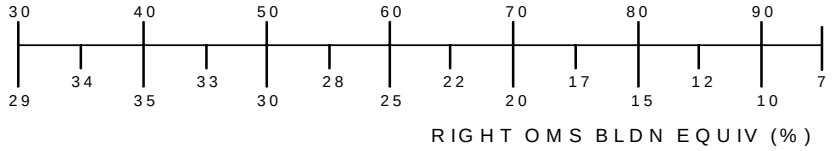

PILE

RTLS CDR

Abort initiated:
After 2:30 (2 eng)
At 3:40 (3 eng)

ABORT RTLS

* No joy: *
* OPS 601 PRO *

√GUIDANCE STATUS on RTLS TRAJ
Expect PPA when GUID % to go = 0

* If GUID 'INHB': *
* √UNCONVERGED GUID TABLE *
* MAN PPA per PRPLT *
* REMAINING *
* After GUID CONVERGE: *
* P,R/Y AUTO/AUTO THROTTLE *

After PPA: √BFS ITEM 1 (*)

TRAJ √Bugs, HSI √ E, R

Pitchdn (β = 0°. α = -2°)

	WINDS
50K	/
38	/
28	/
20	/
12	/
7	/
3	/
1	/
SURF	/
SPDBK @ 3000 FT	

MECO — — — — — — — — **MECO**

OMS 2 TGTING

√ET SEP (MECO + 16 sec)
√MM602 (α > 10° and SEP + 10 sec)
√P,R/Y, SPDBK, BDY FLP – AUTO
α = 50° until ~1.8g, maintain 2.2g

Adjust seat

$\dot{H}$ > -320↑ VERT SIT √α vs Mach
V = 5K √RUD, AIL TRIM
& EAS < 333↓ AIR DATA PROBE (two) – Deploy (√Heat)

M = 3.2 √SPDBK → 65%
M = 2.7 L HUD PWR – ON

* If M < 2.5, P CSS for ADTA to G&C incorp *

M = 2.0 Ensure ADTA to G&C else THETA limits
M < 1.0 P,R/Y – CSS, √SPDBK CMD vs POS
√NWS – 1
Lock Inertia Reels
POST LANDING: ENT, POST LDG

HOOK

RTLS PLT

If CSS: MAN THROT
Man MECO
√P_c = 104% (2 eng)/69% (3 eng)
√DUMP

UNCONVERGED GUIDANCE TABLE

ENG OUT	OUTBOUND INITIAL θ	PITCHAROUND at % (8°/sec)	FLYBACK INITIAL θ
Liftoff	60°	44%	64°
:30	56°	47%	63°
1:00	57°	47%	63°
:30	56°	48%	62°
2:00	49°	51%	61°
:30	42°	51%	52°
3:00	38°	52%	50°
:30	34°	53%	48°
4:00	Last RTLS	52%	46°

√P_c at PPA + 20 sec
* If P_c = 104% (2 eng): *
* G51 MAX THROT – ITEM 4 (*) *

Pitchdn: √P_c → 67%

MECO — — — — — **MECO**

KEAS = 77 √SPDBK → 81%
√ET DOORS – Closed and latched (MECO +1:30)
√ET SEP, SRB SEP – AUTO
Adjust seat
G50 √TACANS and GPS, INCORPORATE
* If KSC TACAN Fail: *
* TACAN Ch 097X (COF), ITEM 5 EXEC *
G50 √AIR DATA, INCORPORATE
MM603 HYD MPS/TVC ISOL VLV (three) – CL
(hold 5 sec, tb-CL)
H = 85K MLS (three) – ON
If Rwy 33(15): MLS CH (three) – 6(8)
I/O RESET
M = 2.7 R HUD PWR – ON
M < 1.0 √R FLT CNTLR PWR – ON
Lock Inertia Reels
M = 0.7 √LG EXTD ISO VLV – OP
H = 10K √BDY FLP – TRAIL
√A/L (KSC – Tabs, Visors, Suit O2)
POST LANDING: ENT, POST LDG

TAL

PILE

TAL	HDG
ZZA	010
MRN	016
FMI	006

*LO XRNG

TAL CDR

If V_I > [23000] manual MECO [23700], go to post MECO
ABORT TAL
[G50] √SITE & RWY (PASS/BFS), √HDG

SITE	RWY	TACANS	ITEM 5	MLS	LENGTH
2	BEN 36/18	MAK 80 (DME)	CBA 116 (DME)	–/–	13720/13220
3	MRN 20/02	MRN 100	AOG 23	6/–	11730/11730
4	ZZA 30L/12R	ZZA 64	ZAR 77 (DME)	6/–	12200/12200
12	BEN 36/18	MAK 80 (DME)	CBA 116 (DME)	–/–	13720/13220
13	*MRN 20/02	MRN 100	AOG 23	6/–	11730/11730
14	*ZZA 30L/12R	ZZA 64	ZAR 77 (DME)	6/–	12200/12200
19	YJT 09/27	YJT 78	YDF 80 (DME)	–/–	9500/9500
20	YYT 29/11	UYT 23	YYT 82 (DME)	–/–	8500/8500
21	YQX 21/31	YQX 74	IQX 32 (DME)	–/–	9700/8900
23	LAJ 15/33	TRM 109	LAJ 45	–/–	10870/10870
24	BEJ 01L/19R	MOJ 37	BEJ 105	–/–	10820/10820
25	IKF 20/29	KEF 57	HL 44 (DME)	–/–	9520/9560
26	INN 06/24	SHA 80 (DME)	CRK93 (DME)	–/–	9540/9540
27	FFA 27/09	FFA 81	BZN 56	–/–	9490/9490
28	KBO 14L/32R	GIX 18	DOR 23Y (DME)	–/–	12020/12020
29	FMI 33/15	FMI 16	NIM 53	6/–	11300/12300
30	ESN 03R/21L	BAG 78 (DME)	BUK 90 (DME)	–/–	11800/11800
31	KKI 15R/33L	RIY 92	KIA 80	–/–	13300/13300
32	JDG 31/13	NKW 57	NKW 57	–/–	12000/12000

* If second eng fails: [TRAJ] √SERC ON *
* [G50] √SITE (√Redes card) *

V_I = [15.0K] √Roll Heads Up

MECO V_I ~24.0K @ CO mark **MECO**

MECO+20 s √ET SEP, √AUTO -Z TRANS
MECO+37 s √MM104

Abort TAL (if reqd):

√TAL flag set: [G50] ITEM 41 = TAL SITE (any site)
√MECO V_I vs HI/LO Energy (TAL PLT)
√Rates < .5°/sec; θ > 15°, Y = 0 ± 30°
PASS, OPS 301 PRO (√304)

* No joy in 68 sec: BFS – ENGAGE *
* BFS, OPS 301 PRO *

MM304

BFS, OPS 301 PRO (√304)
[G50] √SITE, RWY, TACAN
S/B & ALTM (PASS/BFS)

[TRAJ] √BUGS, [HSI] √(H), RANGE, [AMI] √ α = 43°

* Low energy: [TRAJ] ITEM 3 (Lo Energy ENA) *
* If Variable/man 37: Pitch – CSS at α = 37° *
* Pitch – AUTO when $\ddot{H}$ = 0 ↑ (2nd pullout) *

V = 10K √SPDBK → 81%
V = 7K Go to ENTRY MANEUVERS (Cue Card)

SURF WIND	/
SPDBK @ 3000 FT	
ALTM	
AIM PT	
SPDBK	

RTLS

HOOK

TAL PLT

√OMS DUMP

```
* If second eng fail:                    *
*     [G51] DUMP – ITEM 6 (*), 7 (*)     *
*     Failed ME SHUTDN pb (two) – push   *
```

√AUTO THROT

```
* If STUCK TAL:                  *
*     When MPS PRPLT = 2%:       *
*         MAN THROT, Pc → 67%    *
*         AUTO THROT             *
```

V_I ~24.0K @ CO mark

MECO — — —

PILE

POWERED ECAL

G51 √MAX THROT – ITEM 4 (*)
√ADI (two) – REF
√θ → 60°, Yaw → 45°
√Roll to Heads Up
G50 Select SITE and TACAN
When EAS > 4 and incr:
√Yaw to E
√Pitch down at 3°/sec
√MECO, ET SEP

ET SEP + 8s: CSS, pull to α = 58° at 4°/sec, AUTO
√MM602 (BFS, OPS 602 PRO)
Go to ECAL ENTRY

2 E/O ECAL (51.6°)

Velocity (VI)						
IP - 2:30	In Plane	IP + 2:30	Location	Site	RWY	TACANs
*5.3-6.8	*5.3-6.7	*5.3-6.7 6.8-7.3	Wilmington	6	ILM 06	ILM 117
*6.8-8.6 RTLS	*6.7-6.9 6.9-8.1 *8.1-8.4 RTLS	6.7-7.9 *7.9-8.0 RTLS	Cherry Point	7	NKT 32L	EWN 83 (D)
*8.6-9.7	*8.4-8.6 8.6-9.3	*8.0-8.1 8.1-9.8	Oceana NAS	8	NTU 32R	NGU 48
*9.7-10.5	9.2-9.9 *9.9-10.2	8.6-10.5	Wallops	9	WAL 28	SBY 49
	*10.2-10.5	9.5-11.2	Atlantic City	11	ACY 31	CYN 81
	10.5-12.3	10.1-12.7	Gabreski	15	FOK 06	HTO 83
*10.5-10.9 10.9-13.3	10.7-13.4	10.5-13.7	Otis ANGB	16	FMH 32	BOS 74
	11.5-13.2	11.1-13.9	Pease Int'l	17	PSM 34	ENE 118

*Probable bailout region (D) - DME only

3 E/O ECAL (51.6°)

MM 602 Velocity (Vrel)						
IP - 2:30	In Plane	IP + 2:30	Location	Site	RWY	TACANs
*5.3-6.6	*5.3-6.6	*5.3-6.7	Wilmington	6	ILM 06	ILM 117
*6.6-8.9	*6.6-8.7	*6.7-7.3 7.3-8.0 *8.0-8.6	Cherry Point	7	NKT 32L	EWN 83 (D)
*8.9-10.2	*8.7-10.0	*8.6-9.7	Oceana NAS	8	NTU 32R	NGU 48
*10.2-10.9	*10.0-10.7	*9.7-10.6	Wallops	9	WAL 28	SBY 49
	*10.7-11.0	*10.6-11.0	Atlantic City	11	ACY 31	CYN 81
*10.9-11.9 11.9-13.9	*11.0-11.6 11.6-14.4	*11.0-11.2 11.2-14.7	Otis ANGB	16	FMH 32	BOS 74
	11.8-12.4	11.2-13.0	Gabreski	15	FOK 06	HTO 83
	12.8-13.8	12.9-14.2	Pease Int'l	17	PSM 34	ENE 118
13.5-17.2	13.3-17.4	13.1-17.2	Halifax Int'l	18	YHZ 23	UAW 38
15.2-18.0	15.0-18.0	14.9-18.0	Stephenville	19	YJT 09	YJT 78
15.4-18.0	15.3-18.0	15.3-18.0	St. Johns Int'l	20	YYT 29	UYT 23
15.5-18.0	15.4-18.0	15.2-18.0	Gander Int'l	21	YQX 21	YQX 74
		17.3-17.6	Goose Bay	22	YYR 26	UYR 40

*Probable bailout region (D) - DME only

TAL

HOOK

HI-ENER
GANDER

ECAL ENTRY

If 3 OUT ECAL or 2 OUT SECOND GREEN:
G50 Select SITE and TACAN
BFS, OPS 602 PRO

Before NZ Hold:
RHC/PNL TRIM – ENA
If M < 5, √AIL/RUD TRIM

BFS, G50 √SITE and TACAN

Nz Hold:
Expect prebank = 20° if TGT Nz < ~3.3g and ΔAZ > 20°
At $\dot{H}$ = -600 ↑ expect initial bank 2xΔAZ (70° max)
If E/W ≥ STN, expect bank = 70° until ΔAZ increased to 15-30° past site, then 2xΔAz

G50 √TACANS and GPS, INCORPORATE

M < 5 and EAS < 333 ↓:
AIR DATA PROBE (two) – Deploy (√Heat)

G50 INCORPORATE Air Data ASAP

M = 3.2: √OPS 603

Select UHF-G T/R

NO COMM ECAL LNDG CRITERIA
@H = 70K, √Range:

```
*  If Range < 28 nm or Range > 54 nm:  *
*      P, R/Y CSS                      *
*      Bank (≤ 30°) to HDG 120°        *
*      Go to BAILOUT                   *
```

G50 √SPDBK (ITEM 39) per ECAL LANDING Table

ECAL LANDING:

Runway Length + Ovrun	Spdbk	MGTD	Distance
≥ 11,000’	NOM	205	2500
≥ 8500 to < 11,000’	SHORT	205	1500
< 8500’	ELS	195	1000

MAIN GEAR TD: EARLY CHUTE, DEROTATE, √SPDBK – 100%
NOSE GEAR TD: BRAKE – as reqd

```
*  If 5K’ remaining and V > 140 KGS – MAX BRAKING *
*    (smooth application, not < 2 sec)             *
```

Go to RTLS (enter POST-MECO M = 2.7 step) or BAILOUT

PILE

ECAL

HIGH-ENERGY GANDER CDR

MM104 **Abort TAL**:
√TAL flag set: G50 ITEM 41 = TAL SITE (any site)
√Rates < .5°/sec; θ > 15°, Y = 0 ± 30°
PASS, OPS 301 PRO (√304)

MM304

MM304 P, R/Y – CSS
√VREL

VREL	ROLL (CSS)	ALPHA (CSS)
VREL ≥ 19,900	0°	55°
VREL < 19,900	0°	50°

Ḣ = -800↑ Roll towards site (ϕ ~80°), initial target Ḣ = -350, hold initial Alpha per table
G50 Hold 3.0g Nz using roll

* If Nz ≥ 3.5: *
* Reduce Alpha (40°< α <55°) and *
* Ḣ until Nz < 3.5 *

Orbiter bug below upper line or V = 6K Pitch down at 1°/sec, center needles, P, R/Y – AUTO

Go to ENTRY MANEUVERS (Cue Card)

HIGH-ENERGY GANDER PLT

HOOK

HI-ENER TAL

MM304

BFS, OPS 301 PRO (√304)

G50 Select Site YQX – ITEM 41 +2 1

TRAJ √BUGS, HSI √ H, RANGE

√ET DOORS – closed and latched
(MM304 +1:30)

Ḣ = -800↑ Monitor Ḣ, Nz

When Ḣ stabilizes Ensure Nz stays < 3.5

Monitor Traj Report when orbiter bug reaches upper line

Orbiter bug below upper line or V = 6K Monitor pitchdown at 1°/sec to center needles, √P,R/Y – AUTO

V = 19K HYD MPS/TVC ISOL VLV (three) – CL
(hold 5 sec, tb-CL)

V = 15K G50 √RWY, TACAN, S/B, ALTM
(PASS/BFS)

V = 10K

* If RCS < 57 % either side: *
* G51 AFT RCS INH, ITEM 13 EXEC *

V = 10K √SPDBK → 81%
Go to ENTRY MANEUVERS (Cue Card)

PILE

HIGH-ENERGY TAL CDR

MM104 **Abort TAL**:
√TAL flag set: G50 ITEM 41 = TAL SITE (any site)
√Rates < .5°/sec; θ > 15°, Y = 0 ± 30°
PASS, OPS 301 PRO (√304)

HI-ENER GANDER

MM304

MM304 P, R/Y – CSS
√VREL

VREL	ROLL (CSS) 4-5°/sec	ALPHA (CSS)
VREL ≥ 23,800	180°	80° (θ = 280°)
23,300 ≤ VREL < 23,800	180°	55°
VREL < 23,300	0°	55°

$\dot{H}$ = -200 ↓ If Alpha = 80°, push to Alpha = 55° (θ = ~305°)

Earlier of $\dot{H}$ = -600 ↓ or Guid Init Roll Heads Up at 4-5°/sec, maintain Alpha = 55°

$\dot{H}$ = -500 ↑ R/Y – AUTO (√Rolls toward site before $\dot{H}$ > +200)
Limit roll to 90° until V = 6K:
TRAJ Roll CMD > 90° R/Y CSS @ 90°
< 90° R/Y AUTO

Orbiter bug below upper line When commanded drag (⇦) < 40:
Pitch down at 0.5°/sec, center pitch needle,
P – AUTO

V = 6K If energy still high:
Pitch down at 1°/sec, center pitch needle,
P, R/Y – AUTO

Go to <u>ENTRY MANEUVERS</u> (Cue Card)

HIGH-ENERGY TAL PLT

HOOK

MM304

BFS, OPS 301 PRO (√304)

G50 If FMI GO TAL Site – Select FMI –
ITEM 41 + 29
Otherwise, select best Wx site ZZA (Site 4)
or FMI

TRAJ √BUGS, HSI √⌂, RANGE

√ET DOORS – closed and latched
(MM304 +1:30)

ABORT DUMPS

Guid Init:
(D = 3, $\bar{q}$ = 8,
EAS = 48)

* If no comm and ZZA/FMI *
* initial Commanded Drag (⇦) ≥ 35 , *
* G50 Select Site ESN – ITEM 41 + 30 *
*

V = 19K HYD MPS/TVC ISOL VLV (three) – CL
(hold 5 sec, tb-CL)

V = 15K G50 √RWY, TACAN, S/B, ALTM
(PASS/BFS)

V = 10K * If RCS < 57 % either side: *
* G51 AFT RCS INH, ITEM 13 EXEC *

V = 10K √SPDBK → 81%

V = 7K MLS (three) – ON (√channels)
I/O RESET

Go to ENTRY MANEUVERS (Cue Card)

PILE

RTLS/TAL DUMPS

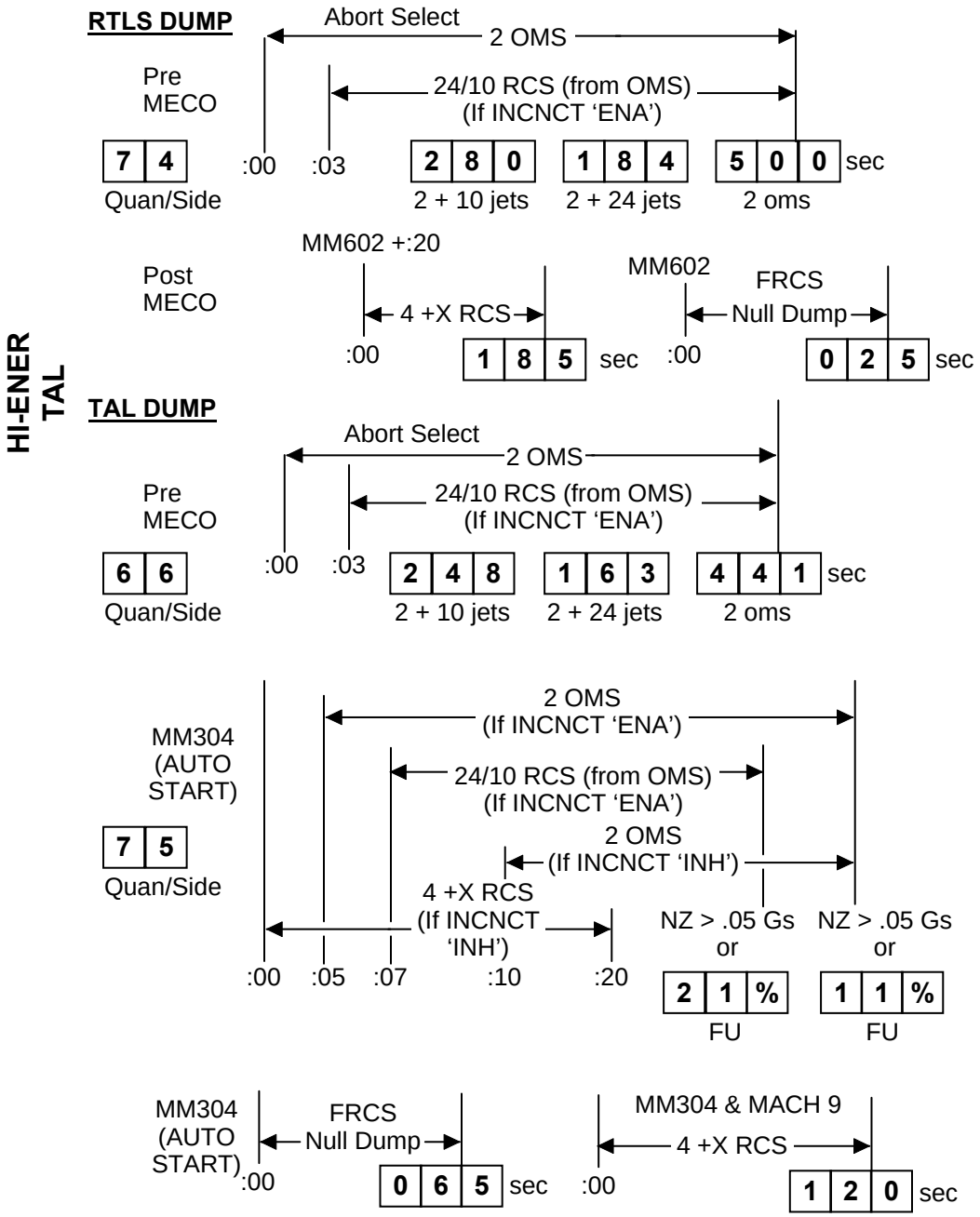

HOOK

ASSIST/ATO/ G51 DUMPS

ASSIST DUMP

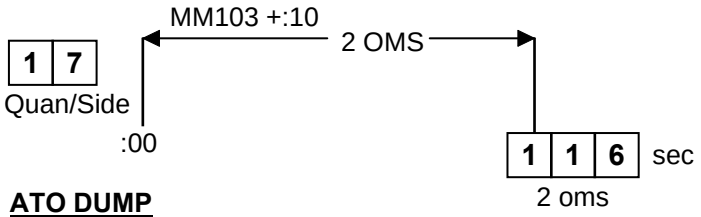

ATO DUMP

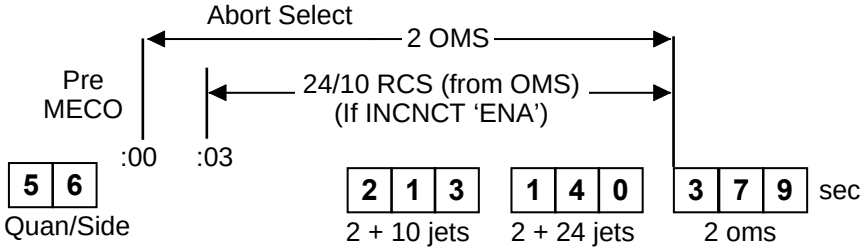

G51 DUMP

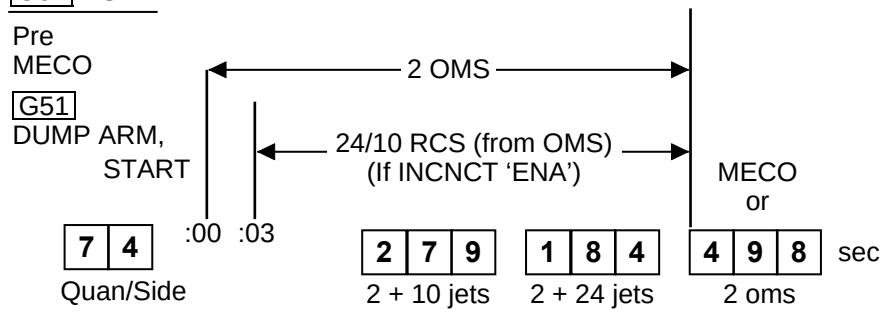

PWRD
CSS

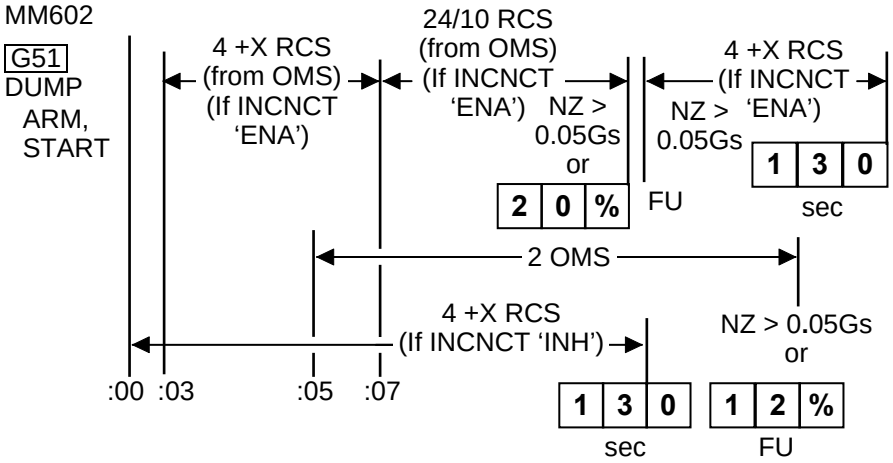

PILE

POWERED CSS – UPHILL/TAL

CSS & MAN THROT
(IF MET < 1:30, ENGAGE BFS)

Yaw to E until 2:30
Then I uphill
or R if TAL

If TAL √HDG	
ZZA	010
MRN	016
FMI	006

Man MECO @ CO mark
$\dot{H}$ = 272
If TAL: $\dot{H}$ = +100

Max H = 400 – 420K
for early TAL

Roll heads up @
15.0 TAL
13.2 uphill

MECO – 90sec: Work + $\dot{H}$

ABORT DUMPS

Idle @ 2%
or
C/O bug alive

3g
Throt

Early TAL:
Initial θ ~50°

If CSS: Man Throt
Man MECO

Incr θ ~10° if 1 eng fail

1 eng @ 104% = 4%/min

POWERED CSS – RTLS

HOOK

CSS & MAN THROT
(IF MET < 1:30, ENGAGE BFS)

Post PPA	**Pre PPA**
2 eng = 100%	2 eng = 104%
3 eng = 69%	3 eng = 69%

R Yaw to R

PPD
Idle & Pitch DN to horiz (α -2°)

Man MECO @ CO mark
Hold FWD stick until SEP

$\dot{H}$ control:
Use θ then Throttle

-1200 max neg. $\dot{H}$

PPA on PRPLT
√ RATE – HIGH
8°/sec
√ RATE – MED

Yaw to E and then
TGT $\dot{H}$ = +800 @ PPD

√ PRPLT
If < 26% (–60 sec)
or < 18% (Vrel = 0)
Throttle up

AFTER ABORT:
Fly Outbound θ
per RTLS PLT table

Post SEP:
Pull to α = 50°
TGT Nz ~2.2g

Pc < 50:
Hands off

1st Stage: use
θ on ASC ADI
Cue Card
+3° if 1 EO

1 eng @ 104% = 4%/min

If CSS: Man Throt
Man MECO

TOP
BACK OF ‘POWERED CSS – RTLS’

PILE

This Page Intentionally Blank

PWRD CSS

ASCENT/ENTRY CUE CARDS

ASCENT ADI - NOMINAL

TIME	θ	H	$\dot{H}$
0:30	68	9K	640
0:50	62	26K	974
1:10	55	49K	1407
1:30	39	82K	1875
1:50	31	123K	2187

(122 OCFR1 CY)

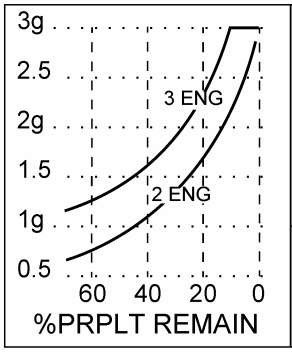

HOOK VELCRO

HOOK VELCRO

-STAGING-

V_I	θ	H	$\dot{H}$
6	19	217K	1722
7	16	275	1269
8	13	310	920
9	11	332	637
10	9	345	405
12	6	356	64
14	9	355	-146
16	25	350	-231
18	23	344	-267
20	21	339	-218
22	19	337	-105
24	17	337	65
25819	13	345	272

ASC-14a/122/A/A

HOOK VELCRO

ASC/ENT CUE CARDS

ENTRY ALPHA

VR	α ref	R	H	$\dot{H}$ref	Rref
25	HI 40 LO	4432	400		
24	HI 40 LO	2625	248	-46	L79
23	43 40 37	2156	240	-63	69
22	43 40 37	1797	233	-83	63
21	43 40 37	1514	226	-105	60
20	43 40 37	1290	219	-123	59
19	43 40 37	1114	213	-146	60
18	43 40 37	978	207	-168	R60
17	43 40 37	859	201	-187	61
16	43 40 37	767	193	-196	63

KSC 15

MAX L/D	
M	α
3	17
2	15
1	12

(122 OCFR1 CY)

HOOK VELCRO

ASC-14b/122/A,E/A

HOOK VELCRO

HOOK VELCRO

15	43 40 37	684	187	-118	64
14	43 40 37	612	182	-127	62
13	43 40 37	544	178	-137	60
12	43 40 37	482	173	-153	58
11	42 39 36	425	168	-195	57
10	41 38 35	374	162	-174	L51
9	39 36 33	326	158	-207	44
8	37 34 31	278	150	-238	40
7	33 30 27	229	140	-266	39
6	30 27 24	185	129	-271	40
5	26 23 20	141	116	-273	40
4	22 19 18	106	103	-264	R42
3	19 16 15	74	90	-248	39
2.5	14	61	81	-257	
2	14	50	76	-260	
1.5	11	39	69	-308	
1	9	28	54	-263	

HOOK VELCRO

This Page Intentionally Blank

ENTRY MANEUVERS

FLIGHT CONDITIONS	MANEUVER
EI-5	√LVLH ATT GNC, OPS 304 PRO * If PREBANK, R/Y – CSS * * Roll at 1°/sec to [ ] * * Maintain PREBANK ±5° * If previous OMS OX TK, He TK, or RCS OX TK leak: G51 VENT DOOR CNTL OPEN – ITEM 43 EXEC (AOA) SPI When SB position – 0%: √HYD MN PUMP PRESS (three) – LO
$\bar{q}$ = 1	(AOA) HYD MN PUMP PRESS (three) – NORM
'Guidance Box' @ $\bar{q}$ ~ 8 or D ~ 3	CLOSED LOOP GUIDANCE ____:____:____ * If PREBANK: P,R/Y – AUTO * Begin AIL trim monitoring
V = 24K	If previous OMS OX TK, He TK, or RCS OX TK leak: G51 VENT DOOR CNTL CLOSE – ITEM 44 EXEC
D = 11	√DRAG H
ΔAz = 10.5°	FIRST ROLL REVERSAL [ ] (DEL PAD)
V = 19K	√HYD MPS/TVC ISOL VLV SYS (three) – CL
V = 15K	√NAVAIDS (I/O RESET if reqd)
V = 12K	RAD BYP VLV MODE (two) – AUTO CNTLR LOOP (two) – AUTO B(A)
V = 10K	√SPDBK to 81%

ENT-6a/E/P

FLIGHT CONDITIONS	MANEUVER
V = 7K	G50 √TACAN and GPS, INCORPORATE * If ELS: UHF MODE – G T/R *
V = 5K	ADTA PROBES – DEPLOY (√HEAT) Begin AIL and RUD trim monitoring
M = 3.5	If previous OMS OX TK, He TK, or RCS OX TK leak: G51 VENT DOOR CNTL OPEN – ITEM 43 EXEC
M = 2.7	√APUs HUD PWR (two) – ON
* If M < 2.5; P CSS for ADTA to G&C incorp *	
M = 2.0	Ensure ADTA to G&C else √Theta limits
M < 1.0	√R FLT CNTLR – ON P,R/Y – CSS as reqd √SPDBK CMD vs POS √NWS – 1 Lock Inertia Reels MAX N_Z [ ] . [ ]
M = 0.7	√LG EXTD ISO VLV – OP
h = 15K	√MLS
h = 10K	√A/L (KSC – Tabs, Visors, Suit O2)
h = 2K	LDG GEAR ARM pb – push (ARM lt on)
h = 300	LDG GEAR DN pb – push (DN lt on)
MAIN GEAR TD	√SPDBK – 100%
V = 195 KEAS	DRAG CHUTE ARM, DPY pb (two) – push (simo) (All lts on)
V = 185 KEAS	DEROTATE
NOSE GEAR TD	SRB SEP – MAN/AUTO and depress pb √Auto Load Relief √HYD BK ISOL VLV (three) – OP
MIDFIELD and V < 140 KGS	BRAKE as required (8-10 fps^2, -0.25 to -0.3G)
* If 5K' remaining and V > 140 KGS – MAX BRAKING *	
V = 60 KGS	DRAG CHUTE JETT pb – push (JETT1,JETT2 lt on)
V = 40 KGS	BRAKE < 6 fps^2 (-0.2G) (Antiskid cutout)
WHEEL STOP	Go to ENT C/L, POST LANDING PROCEDURES

ENT-6b/122/E/A
(Partial)

ENT
MNVR

DRAG CHUTE DEPLOY

MCC Call	Flight Condition
Early	Main Gear TD
NOMINAL	**195 KEAS**
Late	Post-Nose Gear TD Xwind DTO
Emergency Only	No Deploy Except CDR call
NO DEPLOY prior to MGTD > 230 KEAS < 80 KGS Xwind > 15 kts	

FAILED TIRE TECHNIQUE

Post-MGTD	P – AUTO
185 KEAS	Deploy drag chute
180 KEAS	√Auto derotation
NGTD	Max RHC roll away from failed tire

50K	/
38K	/
28K	/
20K	/
12K	/
7K	/
3K	/
1K	/
SURF	/

ENT-6b/122/E/A
(Partial)

This Page Intentionally Blank

ABORT CUE CARDS

CONTINGENCY ABORT

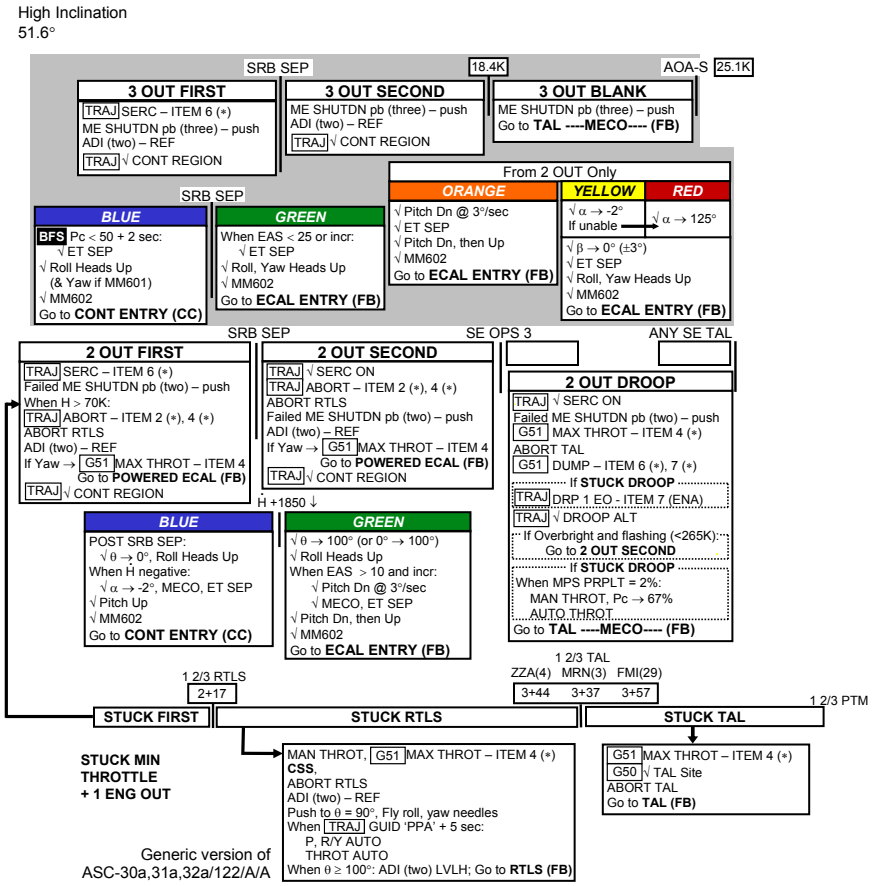

CONTINGENCY ABORT

CONT ENTRY / MM602

VERT SIT INH ECAL/BDA –
ITEM 1 (INH)

Before NZ Hold
RHC/PNL TRIM – ENA
If M < 5,
√ AIL/RUD TRIM
If M < 3, S/B = 65%

M ≤ 5 and EAS < 333 ↓
ADTA PROBES – Deploy
G50 Incorp Air Data ASAP

M2 → 1: θ = 0° by M = 1.0

Select UHF – G T/R

When M < 1.0
Go to **BAILOUT (FB)**

Generic version of
ASC-30a,31a,32a/122/A/A

RTLS CONTINGENCY

High Inclination
51.6°

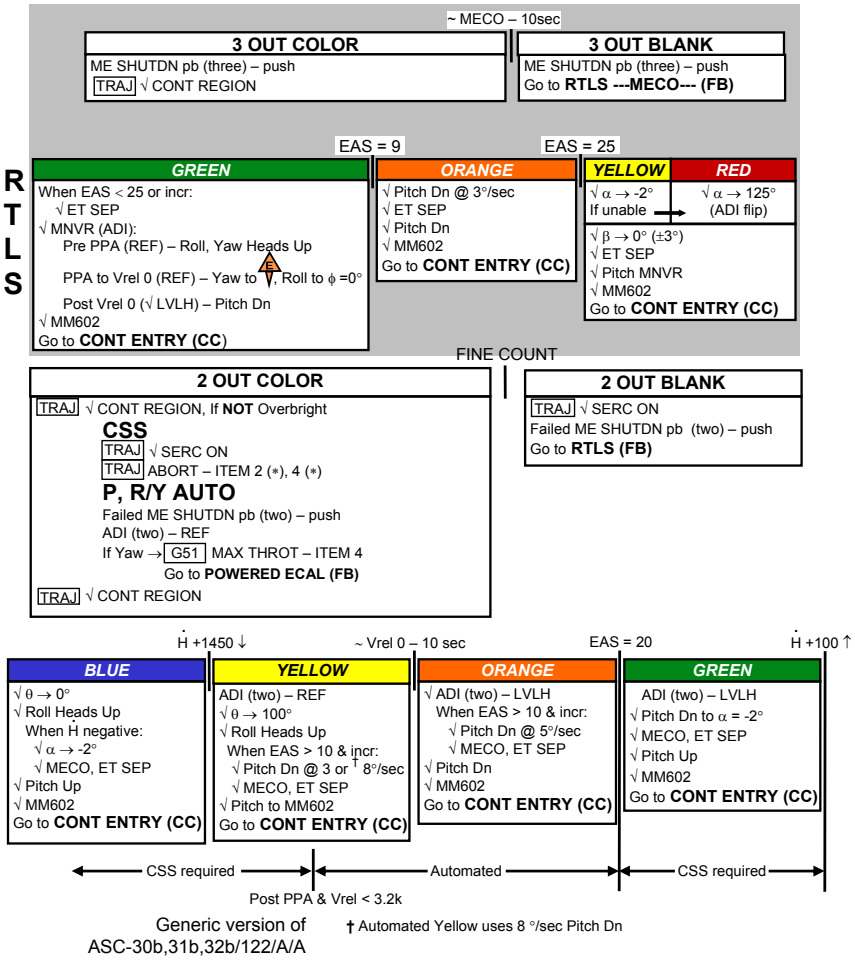

Generic version of
ASC-30b,31b,32b/122/A/A

† Automated Yellow uses 8 °/sec Pitch Dn

RTLS
CONTINGENCY

CONT ENTRY / MM602

VERT SIT

If ECAL/BDA – INH
  √ Theta Limits after Nz Hold
If ECAL/BDA – ENA
  ITEM 1 (INH)

Before NZ Hold
RHC/PNL TRIM – ENA
If M < 5,
  √ AIL/RUD TRIM
If M < 3, S/B = 65%

M ≤ 5 and EAS < 333 ↓
  ADTA PROBES – Deploy
  G50 Incorp Air Data ASAP

M2 → 1: θ = 0° by M = 1.0

Select UHF – G T/R

When M < 1.0
 Go to **BAILOUT (FB)**

Generic version of
ASC-30b,31b,32b/122/A/A

RED

√ ADI (two) – LVLH
√ $\dot{H}$ → +400 (θmax = 75°)
TRAJ AT FINE COUNT:
  √ Pitch Dn to α = -2°
  √ MECO, ET SEP
√ Pitch Up
√ MM602
Go to **RTLS ---MECO--- (FB)**

← Automated →

ZZA TAL REDESIGNATION
(122 OCFR1 CYC)

1st E.O. VI		6000	6100	6200	6300	6400	6500	6600	6700
SE OPS 3 ZZA 109	(4)	10900	11000	11000	11000	11100	11100	11100	11200
SE ZZA 104	(4)	17000	16900	16700	16500	16300	16100	15900	15800

1st E.O. VI		6800	6900	7000	7100	7200	7300	7400	7500
SE OPS 3 ZZA 109	(4)	11200	11200	11300	11300	11300	11400	11400	11400
SE ZZA 104	(4)	15600	15400	15200	15100	14900	14800	14600	14500

1st E.O. VI		7600	7700	7800	7900	8000	8100	8200	8300
SE OPS 3 ZZA 109	(4)	11500	11500	11500	11500	11600	11600	11600	11600
SE ZZA 104	(4)	14400	14300	14100	14000	13900	13900	13800	13700

1st E.O. VI		8400	8500	8600	8700	8800	8900	9000	9100
SE OPS 3 ZZA 109	(4)	11700	11700	11700	11700	11700	11700	11800	11800
SE ZZA 104	(4)	13700	13600	13600	13500	13500	13500	13400	13400

1st E.O. VI		9200	9300	9400	9500	9600	9700	9800	9900
SE OPS 3 ZZA 109	(4)	11800	11800	11800	11800	11800	11800	11900	11900
SE ZZA 104	(4)	13400	13400	13400	13400	13400	13400	13500	13500

1st E.O. VI		10000	10100	10200	10300	10400	10500	10600	
SE OPS 3 ZZA 109	(4)	11900	11900	11900	11900	11900	11900	11900	
SE ZZA 104	(4)	13500	13500	13500	13600	13600	13600	13600	

ASC-9a/122/A/A

ECAL – ZZA or MRN or FMI PRIME TAL

1st EO VI (KFPS)	5.6	5.8	6.0	6.2	6.4	6.6	6.8
CHERRY POINT (7)		6.7 - 7.0	6.7 - 7.2	6.8 - 7.3	6.8 - 7.4	6.9 - 7.5	6.9 - 7.6
OTIS ANGB (16)		10.3 - 11.1	10.3 - 11.2	10.2 - 11.3	10.2 - 11.5	10.2 - 11.6	10.2 - 11.6

1st EO VI (KFPS)	7.0	7.2	7.4	7.6	7.8	8.0	8.2
CHERRY POINT (7)	7.0 - 7.7	7.2 - 7.8	7.4 - 7.9	7.6 - 7.9	7.8 - 8.0	8.0 - 8.0	
GABRESKI (15)					10.5 - 10.7	10.4 - 10.8	10.3 - 11.0
OTIS ANGB (16)	10.2 - 11.7	10.2 - 11.8	10.2 - 11.9	10.2 - 12.0	10.2 - 12.1	10.2 - 12.1	10.3 - 12.2

1st EO VI (KFPS)	8.4	8.6	8.8	9.0	9.2	9.4	9.6
OCEANA NAS (8)		8.6 - 9.0	8.8 - 9.1	9.0 - 9.2	9.2 - 9.3		
WALLOPS (9)				9.4 - 9.6	9.2 - 9.7	9.4 - 9.8	9.6 - 9.8
GABRESKI (15)	10.3 - 11.1	10.3 - 11.2	10.3 - 11.3	10.4 - 11.3	10.4 - 11.4	10.4 - 11.5	10.4 - 11.5
OTIS ANGB (16)	10.3 - 12.3	10.3 - 12.3	10.3 - 12.4	10.4 - 12.4	10.4 - 12.5	10.5 - 12.6	10.5 - 12.6
PEASE INT'L (17)	11.3 - 11.7	11.3 - 11.9	11.3 - 12.0	11.3 - 12.1	11.3 - 12.2	11.3 - 12.2	11.3 - 12.3

1st EO VI (KFPS)	9.8	10.0	10.2	10.4	10.6	10.8	11.0
WALLOPS (9)	9.8 - 9.9						
GABRESKI (15)	10.4 - 11.6	10.5 - 11.7	10.5 - 11.7	10.5 - 11.8	10.6 - 11.8	10.8 - 11.9	11.0 - 11.9
OTIS ANGB (16)	10.5 - 12.7	10.5 - 12.7	10.6 - 12.8	10.6 - 12.8	10.7 - 12.9	10.8 - 12.9	11.0 - 12.9
PEASE INT'L (17)	11.3 - 12.4	11.4 - 12.5	11.4 - 12.5	11.5 -12.6	11.5 - 12.6	11.5 - 12.7	11.5 - 12.7

1st EO VI (KFPS)	11.2	11.4	11.6	11.8	12.0	12.2	12.4
GABRESKI (15)	11.2 - 12.0	11.4 -12.0	11.6 - 12.1	11.8 - 12.2	12.0 - 12.2	12.2 - 12.3	
OTIS ANGB (16)	11.2 - 13.0	11.4 - 13.0	11.6 - 13.1	11.8 - 13.1	12.0 - 13.2	12.2 - 13.2	12.4 - 13.2
PEASE INT'L (17)	11.5 - 12.8	11.5 - 12.8	11.6 - 12.9	11.8 - 12.9	12.0 - 13.0	12.2 - 13.0	12.4 - 13.0

1st EO VI (KFPS)	12.6	12.8	13.0	13.2	13.4	13.6	13.8
OTIS ANGB (16)	12.6 - 13.3	12.8 - 13.3	13.0 - 13.4	13.2 - 13.4	13.4 - 13.4		
PEASE INT'L (17)	12.6 - 13.1	12.8 - 13.1	13.0 - 13.1				

ASC-9b/122/A/A

MRN TAL REDESIGNATION
(122 OCFR1 CYC)

1st E.O. VI		5900	6000	6100	6200	6300	6400	6500	6600
SE OPS 3 MRN 109	(3)	10900	11000	11000	11000	11100	11100	11100	11100
SE MRN 104	(3)	16800	16700	16500	16300	16100	15900	15800	15600

1st E.O. VI		6700	6800	6900	7000	7100	7200	7300	7400
SE OPS 3 MRN 109	(3)	11200	11200	11200	11200	11300	11300	11300	11300
SE MRN 104	(3)	15400	15300	15100	15000	14800	14700	14500	14400

1st E.O. VI		7500	7600	7700	7800	7900	8000	8100	8200
SE OPS 3 MRN 109	(3)	11400	11400	11400	11400	11500	11500	11500	11500
SE MRN 104	(3)	14300	14200	14000	13900	13800	13800	13700	13600

1st E.O. VI		8300	8400	8500	8600	8700	8800	8900	9000
SE OPS 3 MRN 109	(3)	11500	11600	11600	11600	11600	11600	11700	11700
SE MRN 104	(3)	13600	13500	13500	13400	13400	13400	13300	13300

1st E.O. VI		9100	9200	9300	9400	9500	9600	9700	9800
SE OPS 3 MRN 109	(3)	11700	11700	11700	11800	11800	11800	11800	11800
SE MRN 104	(3)	13300	13300	13300	13300	13300	13300	13300	13400

1st E.O. VI		9900	10000	10100	10200	10300	10400	10500	10600
SE OPS 3 MRN 109	(3)	11800	11800	11900	11900	11900	11900	11900	11900
SE MRN 104	(3)	13400	13400	13400	13400	13500	13500	13500	13500

ASC-10a/122/A/A

ECAL – ZZA or MRN or FMI PRIME TAL

1st EO VI (KFPS)	5.6	5.8	6.0	6.2	6.4	6.6	6.8
CHERRY POINT (7)		6.7 - 7.0	6.7 - 7.2	6.8 - 7.3	6.8 - 7.4	6.9 - 7.5	6.9 - 7.6
OTIS ANGB (16)		10.3 - 11.1	10.3 - 11.2	10.2 - 11.3	10.2 - 11.5	10.2 - 11.6	10.2 - 11.6

1st EO VI (KFPS)	7.0	7.2	7.4	7.6	7.8	8.0	8.2
CHERRY POINT (7)	7.0 - 7.7	7.2 - 7.8	7.4 - 7.9	7.6 - 7.9	7.8 - 8.0	8.0 - 8.0	
GABRESKI (15)					10.5 - 10.7	10.4 - 10.8	10.3 - 11.0
OTIS ANGB (16)	10.2 - 11.7	10.2 - 11.8	10.2 - 11.9	10.2 - 12.0	10.2 - 12.1	10.2 - 12.1	10.3 - 12.2

1st EO VI (KFPS)	8.4	8.6	8.8	9.0	9.2	9.4	9.6
OCEANA NAS (8)		8.6 - 9.0	8.8 - 9.1	9.0 - 9.2	9.2 - 9.3		
WALLOPS (9)				9.4 - 9.6	9.2 - 9.7	9.4 - 9.8	9.6 - 9.8
GABRESKI (15)	10.3 - 11.1	10.3 - 11.2	10.3 - 11.3	10.4 - 11.3	10.4 - 11.4	10.4 - 11.5	10.4 - 11.5
OTIS ANGB (16)	10.3 - 12.3	10.3 - 12.3	10.3 - 12.4	10.4 - 12.4	10.4 - 12.5	10.5 - 12.6	10.5 - 12.6
PEASE INT'L (17)	11.3 - 11.7	11.3 - 11.9	11.3 - 12.0	11.3 - 12.1	11.3 - 12.2	11.3 - 12.2	11.3 - 12.3

1st EO VI (KFPS)	9.8	10.0	10.2	10.4	10.6	10.8	11.0
WALLOPS (9)	9.8 - 9.9						
GABRESKI (15)	10.4 - 11.6	10.5 - 11.7	10.5 - 11.7	10.5 - 11.8	10.6 - 11.8	10.8 - 11.9	11.0 - 11.9
OTIS ANGB (16)	10.5 - 12.7	10.5 - 12.7	10.6 - 12.8	10.6 - 12.8	10.7 - 12.9	10.8 - 12.9	11.0 - 12.9
PEASE INT'L (17)	11.3 - 12.4	11.4 - 12.5	11.4 - 12.5	11.5 -12.6	11.5 - 12.6	11.5 - 12.7	11.5 - 12.7

1st EO VI (KFPS)	11.2	11.4	11.6	11.8	12.0	12.2	12.4
GABRESKI (15)	11.2 - 12.0	11.4 -12.0	11.6 - 12.1	11.8 - 12.2	12.0 - 12.2	12.2 - 12.3	
OTIS ANGB (16)	11.2 - 13.0	11.4 - 13.0	11.6 - 13.1	11.8 - 13.1	12.0 - 13.2	12.2 - 13.2	12.4 - 13.2
PEASE INT'L (17)	11.5 - 12.8	11.5 - 12.8	11.6 - 12.9	11.8 - 12.9	12.0 - 13.0	12.2 - 13.0	12.4 - 13.0

1st EO VI (KFPS)	12.6	12.8	13.0	13.2	13.4	13.6	13.8
OTIS ANGB (16)	12.6 - 13.3	12.8 - 13.3	13.0 - 13.4	13.2 - 13.4	13.4 - 13.4		
PEASE INT'L (17)	12.6 - 13.1	12.8 - 13.1	13.0 - 13.1				

ASC-10b/122/A/A

FMI TAL REDESIGNATION
(122 OCFR1 CYC)

1st E.O. VI		6200	6300	6400	6500	6600	6700	6800	6900
SE OPS 3 FMI 109	(29)	11000	11100	11100	11100	11200	11200	11200	11200
SE FMI 104	(29)	17700	17500	17300	17100	16900	16700	16500	16300

1st E.O. VI		7000	7100	7200	7300	7400	7500	7600	7700
SE OPS 3 FMI 109	(29)	11300	11300	11300	11300	11400	11400	11400	11400
SE FMI 104	(29)	16100	15900	15800	15600	15400	15300	15100	14900

1st E.O. VI		7800	7900	8000	8100	8200	8300	8400	8500
SE OPS 3 FMI 109	(29)	11500	11500	11500	11500	11600	11600	11600	11600
SE FMI 104	(29)	14800	14700	14600	14400	14300	14200	14200	14100

1st E.O. VI		8600	8700	8800	8900	9000	9100	9200	9300
SE OPS 3 FMI 109	(29)	11600	11700	11700	11700	11700	11700	11700	11800
SE FMI 104	(29)	14000	14000	13900	13900	13800	13800	13800	13800

1st E.O. VI		9400	9500	9600	9700	9800	9900	10000	10100
SE OPS 3 FMI 109	(29)	11800	11800	11800	11800	11800	11800	11900	11900
SE FMI 104	(29)	13800	13800	13800	13800	13800	13800	13800	13800

1st E.O. VI		10200	10300	10400	10500	10600			
SE OPS 3 FMI 109	(29)	11900	11900	11900	11900	11900			
SE FMI 104	(29)	13800	13900	13900	13900	13900			

ASC-12a/122/A/A

ECAL – ZZA or MRN or FMI PRIME TAL

1st EO VI (KFPS)	5.6	5.8	6.0	6.2	6.4	6.6	6.8
CHERRY POINT (7)		6.7 - 7.0	6.7 - 7.2	6.8 - 7.3	6.8 - 7.4	6.9 - 7.5	6.9 - 7.6
OTIS ANGB (16)		10.3 - 11.1	10.3 - 11.2	10.2 - 11.3	10.2 - 11.5	10.2 - 11.6	10.2 - 11.6

1st EO VI (KFPS)	7.0	7.2	7.4	7.6	7.8	8.0	8.2
CHERRY POINT (7)	7.0 - 7.7	7.2 - 7.8	7.4 - 7.9	7.6 - 7.9	7.8 - 8.0	8.0 - 8.0	
GABRESKI (15)					10.5 - 10.7	10.4 - 10.8	10.3 - 11.0
OTIS ANGB (16)	10.2 - 11.7	10.2 - 11.8	10.2 - 11.9	10.2 - 12.0	10.2 - 12.1	10.2 - 12.1	10.3 - 12.2

1st EO VI (KFPS)	8.4	8.6	8.8	9.0	9.2	9.4	9.6
OCEANA NAS (8)		8.6 - 9.0	8.8 - 9.1	9.0 - 9.2	9.2 - 9.3		
WALLOPS (9)				9.4 - 9.6	9.2 - 9.7	9.4 - 9.8	9.6 - 9.8
GABRESKI (15)	10.3 - 11.1	10.3 - 11.2	10.3 - 11.3	10.4 - 11.3	10.4 - 11.4	10.4 - 11.5	10.4 - 11.5
OTIS ANGB (16)	10.3 - 12.3	10.3 - 12.3	10.3 - 12.4	10.4 - 12.4	10.4 - 12.5	10.5 - 12.6	10.5 - 12.6
PEASE INT'L (17)	11.3 - 11.7	11.3 - 11.9	11.3 - 12.0	11.3 - 12.1	11.3 - 12.2	11.3 - 12.2	11.3 - 12.3

1st EO VI (KFPS)	9.8	10.0	10.2	10.4	10.6	10.8	11.0
WALLOPS (9)	9.8 - 9.9						
GABRESKI (15)	10.4 - 11.6	10.5 - 11.7	10.5 - 11.7	10.5 - 11.8	10.6 - 11.8	10.8 - 11.9	11.0 - 11.9
OTIS ANGB (16)	10.5 - 12.7	10.5 - 12.7	10.6 - 12.8	10.6 - 12.8	10.7 - 12.9	10.8 - 12.9	11.0 - 12.9
PEASE INT'L (17)	11.3 - 12.4	11.4 - 12.5	11.4 - 12.5	11.5 -12.6	11.5 - 12.6	11.5 - 12.7	11.5 - 12.7

1st EO VI (KFPS)	11.2	11.4	11.6	11.8	12.0	12.2	12.4
GABRESKI (15)	11.2 - 12.0	11.4 -12.0	11.6 - 12.1	11.8 - 12.2	12.0 - 12.2	12.2 - 12.3	
OTIS ANGB (16)	11.2 - 13.0	11.4 - 13.0	11.6 - 13.1	11.8 - 13.1	12.0 - 13.2	12.2 - 13.2	12.4 - 13.2
PEASE INT'L (17)	11.5 - 12.8	11.5 - 12.8	11.6 - 12.9	11.8 - 12.9	12.0 - 13.0	12.2 - 13.0	12.4 - 13.0

1st EO VI (KFPS)	12.6	12.8	13.0	13.2	13.4	13.6	13.8
OTIS ANGB (16)	12.6 - 13.3	12.8 - 13.3	13.0 - 13.4	13.2 - 13.4	13.4 - 13.4		
PEASE INT'L (17)	12.6 - 13.1	12.8 - 13.1	13.0 - 13.1				

ASC-12b/122/A/A

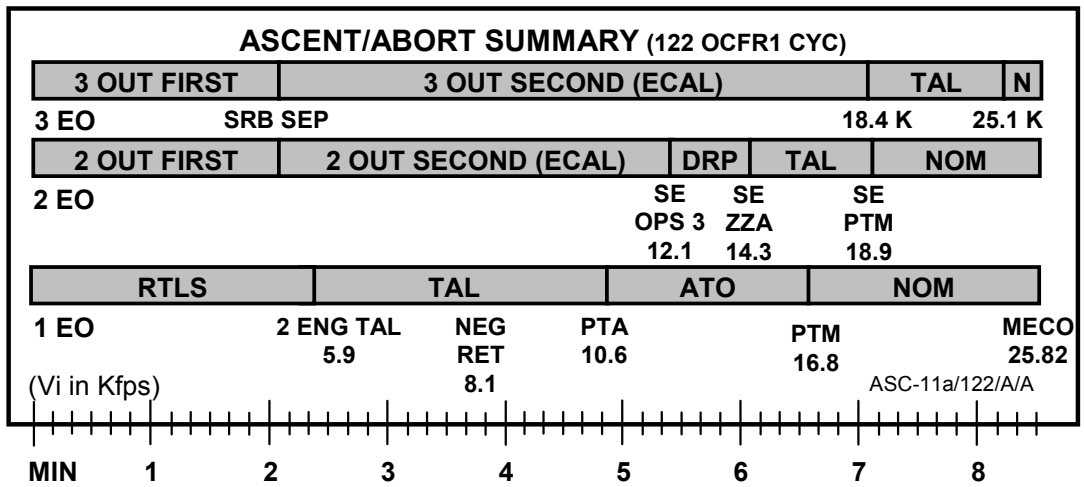
ASCENT/ABORT SUMMARY (122 OCFR1 CYC)
3 OUT FIRST
3 OUT SECOND (ECAL)
TAL
N
3 EO
SRB SEP
18.4 K
25.1 K
2 OUT FIRST
2 OUT SECOND (ECAL)
DRP
TAL
NOM
2 EO
SE OPS 3 12.1
SE ZZA 14.3
SE PTM 18.9
RTLS
TAL
ATO
NOM
1 EO
2 ENG TAL 5.9
NEG RET 8.1
PTA 10.6
PTM 16.8
MECO 25.82
(Vi in Kfps)
ASC-11a/122/A/A
MIN
1
2
3
4
5
6
7
8

POST OMS 1 BURN PROCEDURES

1: GNC OMS 1 MNVR EXEC	2: GNC OMS 1 MNVR EXEC
3: BFS, GNC SYS SUMM 2	

ET PHOTO MANEUVER/MPS DUMP

```
                    * If OMS 1 Burn performed, go to *
                    *   POST BURN STATUS             *
```

B √MCC,
ADI – REF

```
                    * If Feedline Fail:                      *
                    *    √MCC GO for +X and Pitch Mnvr       *
                    *      At MECO + 6 min:       (14:23 Nom) *
                    *          ET SEP – SEP                  *
                    *      At MM104 + 2 sec                  *
                    *          +X xlation for 11 sec         *
                    *      At OMS 1 TIG:          (16:05 Nom) *
                    *          Pitch up at 2°/sec until ET in O/H *
                    *            window (P ~110°)            *
                    *      Go to MPS DUMP complete           *
```

If NO-GO for Photo Pitch Mnvr, go to MPS DUMP complete; do not pitch

MPS DUMP start (MECO + 2:03)

C At OMS 1 TIG + 30 sec: (MECO + 2:33) (10:56 Nom)

C3 DAP – INRTL: R (DISC), P (PULSE), Y (DISC), Orbiter pitches up

Control pitch rate 2°/sec to 3°/sec

```
                    * If no pitch rate, go to MPS DUMP complete *
```

When ET in O/H window (MS call or P ~90°):
P – DISC
Adjust pitch photo att as reqd for MS

P **MPS DUMP complete**

F4 √BDY FLP pb – lt off (MECO + 4 min) (12:24 Nom)

```
                    * C     If no pitch rate,                *
                    *         P – DISC                       *
                    *         Pitch up at 2°/sec until ET    *
                    *           in O/H window (P ~85°)       *
```

1: GNC OMS 1 MNVR EXEC	2: GNC OMS 1 MNVR EXEC
3: BFS, GNC SYS SUMM 2	

C **POST BURN STATUS**

NOMINAL [ ] OMS 1 TIG TO MCC [ ] [:] [ ] [ ]

```
* C  ALPHA MANAGEMENT (if reqd)      *
*                                    *
*     If underspeed (ATO or AOA-S) OMS 1  *
*       and Post OMS 1 HP ≤ 75 nm:   *
*         Maneuver to LVLH R000, P340, Y000 *
*           (maintain LVLH P = 0 ± 20)  *
*         After 10 min:              *
*             Maneuver to LVLH P = 340 *
*         After 10 min:              *
*             Maneuver to Burn Attitude *
```

P When MPS dump complete:
R4 HYD MPS/TVC ISOL VLV (1,2,3; 5 sec interval) – CL (hold each 5 sec, tb-CL)

B F6,F8 FLT CNTLR PWR (two) – OFF
C3 DAP – AUTO

IF AOA

If two Freon Loops ↓ or two H2O Loops ↓:
Go to SYS AOA
Otherwise, go to AOA

```
* If no comm and MPS dump complete: *
*     HYD MN PUMP PRESS (three) –   *
*       LO (MA)                     *
```

P **APU/HYD SHUTDN**

√MCC
R2 √APU AUTO SHTDN (three) – ENA
BLR PWR (three) – OFF
N2 SPLY (three) – OFF
APU OPER (1,2,3; 5 sec interval) – OFF (MA)
FU TK VLV (three) – CL
√Shutdn (HYD PRESS < 200)
CNTLR PWR (three) – OFF
√HYD MN PUMP PRESS (three) – NORM

1: GNC OMS 1 MNVR EXEC	2: GNC OMS 1 MNVR EXEC
3: BFS, GNC SYS SUMM 2	

TAIL ONLY CONTROL (√MCC)

		2: GNC 23 RCS
CRT2	OVRD FWD RCS MANF STATs 1,2,3,4 – CL	

FES & HEATER ACTIVATION

C	L1	FLASH EVAP CNTLR PRI A – ON
	L2	FDLN HTR (two) – 1
P	R1	O2 TK1,2 HTRS B (two) – AUTO H2 TK1,2 HTRS B (two) – AUTO
MS1	A12	APU HTR TK/FU LN/H2O SYS 1A,2A,3A (three) – AUTO

AC BUS SNSR

R1	AC BUS SNSR (three) – OFF (1 sec), then AUTO TRIP

MAJOR MODE CHANGE

CRT1	GNC, OPS 105 PRO

1: GNC OMS 2 MNVR EXEC	2: GNC OMS 2 MNVR EXEC
3: BFS, GNC OMS 2 MNVR EXEC	

1: GNC OMS 2 MNVR EXEC	2: GNC OMS 2 MNVR EXEC
3: BFS, GNC OMS 2 MNVR EXEC	

B **OMS 2 BURN SETUP**

√OMS 2 TARGETING, Flip Book

CRT1 TRIM LOAD – ITEM 6 +0.4 -5.7 +5.7 EXEC

```
* For single eng burn (good eng):              *
*     TRIM LOAD LY – ITEM 7 +5.2 EXEC          *
*                RY – ITEM 8 -5.2 EXEC          *
*     OMS L        – ITEM 2 EXEC               *
*           R      – ITEM 3 EXEC               *
* For RCS burn:                                *
*     RCS SEL      – ITEM 4 EXEC               *
```

NOTE
Onboard computed TIG may vary slightly but is acceptable

√Targets, OMS TARGETS

LOAD – ITEM 22 EXEC
TIMER – ITEM 23 EXEC

CRT3 √BFS TGT

1: GNC OMS 2 MNVR EXEC	2: GNC OMS 2 MNVR EXEC
3: BFS, GNC OMS 2 MNVR EXEC	

P **MPS PWRDN/ISOL**

NOTE
Expect multiple MAs for MPS He P as regs bleed down

R2 MPS ENG PWR L (two) – OFF
CTR (two) – OFF
R (two) – OFF
He ISOL (six) – GPC
PNEU He ISOL – GPC
√He I'CNCT (three) – GPC

MPS GH2 INERTING

R4 MPS H2 PRESS LINE VENT – OP
(Start watch)
After 1 min:
MPS H2 PRESS LINE VENT – GND

1: GNC OMS 2 MNVR EXEC	2: GNC OMS 2 MNVR EXEC
3: BFS, GNC OMS 2 MNVR EXEC	

P **ET UMBILICAL DOOR CLOSURE**

* If Feedline fail, √MCC before closure *

> WARNING
> ET CTRLINE LATCHES must be stowed prior to L,R DR closure to prevent door drive damage

NOTE
Double times for single motor operation

R2 ET UMB DR

MODE – GPC/MAN
CTRLINE LAT – STO
√After 6 sec, CTRLINE LAT tb – STO

* If CTRLINE LAT does not stow within 12 sec: *
* CTRLINE LAT – GND *
* √MCC *

CTRLINE LAT – GND
L,R DR (two) – CL (tb-bp)
√After 24 sec, L,R DR tb (two) – CL

* If doors do not close within 48 sec: *
* L,R DR (two) – OFF *
* √MCC *

L,R LAT (two) – LAT (tb-bp)
√After 6 sec, L,R LAT tb (two) – LAT

* If doors do not latch within 12 sec: *
* L,R DR (two) – OFF *
* LAT (two) – OFF *
* √MCC *

L,R DR (two) – OFF
LAT (two) – OFF
MODE – GPC

1: GNC OMS 2 MNVR EXEC	2: GNC OMS 2 MNVR EXEC

3: BFS, GNC OMS 2 MNVR EXEC

OMS BURN PREP

```
* For single eng burn/No PROP   *
*   failures:                   *
*      XFEED failed eng PROP to *
*        good eng               *
```

P O8 L,R OMS
√He PRESS/VAP ISOL A (two) – GPC
B (two) – CL
√TK ISOL (four) – GPC (tb-OP)
√XFEED (four) – GPC (tb-CL)

B Wedge Install <u>OMS 2/ORBIT OMS BURN</u> and <u>OMS 2 BURN MONITOR</u> Cue Cards (F6,F8)

If FRCS reqd,
Go to <u>OPS 1 RCS BURN</u> (Cue Card)

OMS 2 BURN ATTITUDE MNVR

B F6,F8 √ADI ATT (two) – INRTL
RATE (two) – 1
C MNVR – ITEM 27 EXEC (*)

3: BFS, GNC SYS SUMM 2

B **SEAT SAFING AND ADJUSTMENT**

Adjust Back Angle

TIG-5 B Go to <u>OMS 2/ORBIT OMS BURN</u> (Cue Card)

OMS 2 BURN CARDS

OMS 2

OMS 2 BURN MONITOR

OMS TEMP* L R FU IN P ≥ 230 230	OMS ENG FAIL
≤ 214 212 or No FU IN P	OMS PRPLT FAIL
OMS PC* & OMS ↓ (BFS: √accel) ENG VLV 1 or 2 < 70 or OX IN P > 227	OMS ENG FAIL
OX IN P ≤ 227 or No OX IN P	OMS PRPLT FAIL
OMS OX/FU TK P (√ENG IN P) OX/FU LOW	He PRESS/VAP ISOL (two) – OP If aff TK P not incr: He PRESS/VAP ISOL (two) – CL At PC < 72 or OMS TEMP or HP > 85 : OMS PRPLT FAIL
OX & FU HIGH	He PRESS/VAP ISOL (two) – CL Cycle He A(B) to maintain TK P 234-284
OMS He TK P LOW (√ OMS/MPS)	At He P < 640 or QTY ≤ 41: If HP < 85 : OMS XFEED from good OMS At HP > 85 : OMS PRPLT FAIL
OMS N2 REG P HIGH or LOW	OMS ENG – ARM
OMS N2 TK P LOW (√ OMS/MPS)	At N2 TK P < 470: OMS ENG – ARM
OMS GMBL PRI fail	L(R) OMS GMBL – SEC (twice)
SEC fail	If high RCS usage: OMS ENG FAIL
GPC **1(4) &** Burning OMS aff	aff GPC PWR – OFF If SEC GMBL avail: aff MDM FF 1(4) – OFF,ON L(R) OMS GMBL – SEC (twice)
SEC GMBL lost	If high RCS usage: OMS ENG FAIL
2 FAs lost	√MAN SHUTDN
I/O ERROR FA **1(4)**	L(R) OMS GMBL – SEC
	I/O RESET (if recov: BFS I/O RESET) If high RCS usage: OMS ENG FAIL
2 FAs lost	√MAN SHUTDN
BCE STRG D	I/O RESET (if recov: >>)
1(4)	If high RCS usage: L(R) OMS GMBL – SEC (twice)
I/O ERROR PCM	OI PCMMU PWR – 2(1)

*If XFD, BLDN, or sensor fail, monitor ENG IN P for off-nominal performance

ASC-5a/122/A,O/A

OMS 2/ORBIT OMS BURNS

√MM105/202(302)
Enter TGO +5 sec (2 eng) or TGO +10 sec (1 eng)
√BURN ATT (INRTL) then REF, pb – push
√ENG SEL √DAP TRANS – NORM (MM202)
CNTL PWR (two) – ON √DAP – AUTO(PASS)/DISC
√GMBL TRIM
2 engine: P = +0.4 LY = -5.7 RY = +5.7
1 engine: P = +0.4 LY = +5.2 RY = -5.2
L,R OMS He PRESS/VAP ISOL A (two) – OP
. . . Wait 2 sec . . .
L,R OMS He PRESS/VAP ISOL B (two) – GPC (OP for SE burn)

	GPC	OP	CL
ORB BURN A			
B			

TIG-2 SEL OMS ENG(s) – ARM/PRESS (√P VLVs OP)
If P VLV CL: Aff OMS ENG – OFF

> WARNING
> Do not burn aff engine if:
> OMS N2 TK P < 470(564) (NONCRIT BURN)
> He TK P < 640
> FU ENG IN P < 216(244)
> OX ENG IN P < 151(244)

ΔVTOT: OMS XFEED RETURN (Planned Single Engine)

-:15 EXEC
If OMS ENG P_c MSG and non critical burn: Aff ENG – OFF
If Leaking OMS PROP, burn RCS +X TIG - 15 sec to OMS IGN + 1 sec

:00 TIG; start watch (√P_c, ΔVTOT, ENG VLVs)

OMS PRPLT FAIL:
HP < 85 (CONTINUE BURN):
Failed OMS ENG – OFF
√XFEED (two) – CL
TK ISOL (two) – CL
He PRESS (two) – CL
HP > 85 (STOP BURN):
OMS ENG (two) – OFF
√Failed OMS XFEED (two) – CL
TK ISOL (two) – CL
He PRESS (two) – CL
OMS ENG FAIL:
ASCENT or CRIT O/O (Continue Burn)
Failed ENG – OFF
OMS XFEED at → 1/2 ΔVTOT at FAIL

RCS COMPLETION: (Hp < 85 or CRIT O/O)
Interconnect to either OMS that was ENG FAIL
THC +X (Hp = 85)
Post burn, AFT RCS RECONFIG

CUTOFF
+:02 OMS ENG(s) – OFF (if < 3 IMU, at ☐:☐☐)

Trim Residuals:

OMS 2	TAIL ONLY CNTL	Orbit
VGO X < 0.2 fps VGO Y,Z < 2 fps	VGO X < +0.2 fps	All axes < 0.2 fps

ASC-6a/122/A,O/A

OPS 1 RCS BURN

AFT RCS

√RCS BURN CONFIG:
OMS TK ISOL (all) – OP
L(R) OMS XFEED (two) – OP
R(L) OMS XFEED (two) – CL
AFT L,R RCS XFEED (four) – OP
TK ISOL (six) – CL

OMS TK switch at 1/2 ΔVTOT (If reqd) [ ][ ][ ]

TIG-2 L,R OMS He PRESS/VAP ISOL A – OP
. . . Wait 2 sec . . .
L,R OMS He PRESS/VAP ISOL B – OP
√MM105
CNTLR PWR (two) – ON
√BURN ATT (INRTL) then REF, pb – push
√RCS SEL
DAP: INRTL/DISC
:00 + X
Maintain PITCH ATT ERR ± 3°
Monitor OMS data
Monitor ΔVTOT
CUTOFF Release THC
CNTLR PWR (two) – OFF

FWD RCS

FRCS BURN PREP
Load DUMMY target for FRCS attitude
RCS SEL – ITEM 4 EXEC
TIG @ TTA = 2:00 or as reqd
ΔVX = - 2.1 (ITEM 19)
ΔVY = 0 (ITEM 20)
ΔVZ = +1.0 (ITEM 21)
LOAD – ITEM 22 EXEC
TIMER – ITEM 23 EXEC
TIG-10 Auto Mnvr to ATT
When in attitude:
ADI ATT – REF (push)
Load External ΔV Burn Target
ΔVX = +80
ΔVY = 0
ΔVZ = 0
LOAD – ITEM 22 EXEC
TIMER – ITEM 23 EXEC
√VGOX = negative
√VGOY = 0
√VGOZ = + 21 ± 2
√REF ball – 0,0,0

NOTE
Error needles invalid during burn
Burn time = ~2X TGO
TGT Hp = [85] for ASCENT

-:30 CNTLR PWR (two) – ON
DAP: INRTL/DISC
:00 -X
CUTOFF CUR HP = TGT HP [ ][ ][ ], release THC
CNTLR PWR (two) – OFF

ASC-6b/122/A,O/A

POST OMS 2 BURN PROCEDURES

1: GNC OMS 2 MNVR EXEC	2: GNC OMS 2 MNVR EXEC
3: BFS, GNC SYS SUMM 2	

C **POST BURN STATUS**

NOMINAL [ ] ΔTIG [ ] [:] [ ] [ ]

B F6,F8 FLT CNTLR PWR (two) – OFF
C3 √DAP: AUTO

C **OMS TVC GMBL CHECK**

CRT1 SECONDARY CHECK
Perform SEC L,R then PRI L,R GMBL CK

P **OMS/RCS POST BURN RECONFIG**

O7	AFT L,R RCS	
	He PRESS A (two)	– GPC (tb-OP)
	B (two)	– CL (tb-CL)
	TK ISOL (six)	– OP (tb-OP)
	√MANF ISOL 1,2,3,4 (eight)	– GPC (tb-OP)
	XFEED (four)	– CL (tb-CL)
O8	FWD RCS	
	He PRESS A	– GPC (tb-OP)
	B	– CL (tb-CL)
	TK ISOL (two)	– OP (tb-OP)
	√MANF ISOL 1,2,3,4 (four)	– GPC (tb-OP)
	L,R OMS	
	He PRESS/VAP ISOL (four)	– CL
	TK ISOL (four)	– OP (tb-OP)
	XFEED (four)	– CL (tb-CL)

1: GNC OMS 2 MNVR EXEC	2: GNC OMS 2 MNVR EXEC
3: BFS, GNC SYS SUMM 2	

MAJOR MODE CHANGE

CRT1 GNC, OPS 106 PRO

1: GNC OMS 2 MNVR COAST	2: GNC OMS 2 MNVR COAST

B C4A, Stow ASC PKT (Helmet Bag)
R3A Unstow ORBIT Cue Cards & ORB PKT

* If ATO, √MCC for procedure changes *
* If Rev 3 deorbit reqd, go to CONT *
* DEORB, <u>LAUNCH DAY ORBIT 3</u> *

Go to POST INSERT, <u>POST INSERTION</u>

This Page Intentionally Blank

AOA PADS

DIRECT INSERTION AOA DEL PAD

DEORBIT

PRPLT ( )

BURN CUE CARD:

OMS ENG FAIL XFEED QTY CUE %L %R

TOT AFT QTY 1 (%)	91
TOT AFT QTY 2 (%)	53
FLIP ΔV	48
AFT ΔV	29
B/U SITE	N/A

FRCS: DUMP TO % (USE TIME AS CUE) ☐ OX ☐ FU

ENTRY / LANDING

EI - 5 MM303 INRTL ATT (6-30) R P Y

MM304 PREBANK (ENT MNVR Cue Card) ☐ L ☐ R

ALTM SET (6-34) .

CLG INIT : :

EXPECTED AIL TRIM ☐ L ☐ R .

VREL 1ST REVERSAL

XCG AT TD .

LAND SITE RWY

☐ L ☐ OVHD deg MLS

☐ R ☐ STRT TAC

ΔT MACH < 1 TO HAC : MAX Nz . Nz LIMIT .

ΔT HAC INIT TO H = 20K :

AIMPOINT ☐ NOM ☐ CLOSE-IN

SPEEDBRAKE ☐ NOM ☐ S.F. % @ 3K

WINDS: (ENT MNVR Cue Card)

50K	/
38K	/
28K	/
20K	/
12K	/
7K	/
3K	/
1K	/
SURFACE	/

REMARKS:

AOA PADS

W/OMS 1 AOA DEL PAD

DEORBIT

PRPLT ( )

BURN CUE CARD:

OMS ENG FAIL XFEED QTY CUE %L %R

TOT AFT QTY 1 (%) 91

TOT AFT QTY 2 (%) 53

FLIP HP = ( ) + [ΔHP (REDES SITE) OR ΔHP (PRI SITE)] 19 STEEP / 07 SHALLOW + (FLIP ΔV / 2) = 24

TGT HP

AFT HP = ( ) + (AFT ΔV / 2) = 15

TGT HP

B/U SITE N/A

FRCS: DUMP TO % (USE TIME AS CUE) OX FU

ENTRY / LANDING

EI - 5 MM303 INRTL ATT (6-30) R P Y

MM304 PREBANK (ENT MNVR Cue Card) L R

ALTM SET (6-34) .

CLG INIT : :

EXPECTED AIL TRIM L R .

VREL 1ST REVERSAL

XCG AT TD .

LAND SITE RWY

L OVHD deg MLS

R STRT TAC

ΔT MACH < 1 TO HAC : MAX Nz . Nz LIMIT .

ΔT HAC INIT TO H = 20K :

AIMPOINT SPEEDBRAKE

NOM NOM % @ 3K

CLOSE-IN S.F.

WINDS: (ENT MNVR Cue Card)

50K	/
38K	/
28K	/
20K	/
12K	/
7K	/
3K	/
1K	/
SURFACE	/

REMARKS:

DEORBIT MNVR PAD

OMS BOTH	1	
L	2	
R	3	
RCS SEL	4	
TV ROLL	5	
TRIM LOAD		
P	6	( ) .
LY	7	( ) .
RY	8	( ) .
WT	9	
TIG	10	/ : : .
TGT PEG 4		
C1	14	
C2	15	( ) .
HT	16	.
θT	17	.
PRPLT	18	( )

BURN ATT	
R	24
P	25
Y	26
REI	
TXX	:

ΔVTOT	.
TGO	:
VGO X	( ) .
VGO Y	( ) .
VGO Z	( ) .
	HA / HP
TGT	( )

NOTES

RCS I'CNCT:

- [ ] L OMS → RCS
- [ ] R OMS → RCS
- [ ] NONE

BURN CARD **OMS PRPLT PAD**

DEORBIT BURN (1 ENG)	OMS XFEED RETURN at ΔVTOT = ☐☐☐ or ☐ ☐☐ at ☐☐ % ☐ TK ISOLs – CL
DEORBIT BURN (RCS)	RCS I'CNCT TK SW at ΔVTOT = ☐☐☐ OMS PRPLT LOW: ΔVTOT = ☐☐☐
UNBALANCED PRPLT DEORBIT BURN	INITIAL CONFIG: ☐ TK ISOLs – CL While feeding 2 OMS from 1 POD: OMS PRPLT FAIL: Secure ☐ OMS Secure ☐ OMS Interconnect ☐ OMS to RCS THC + X for ☐ : ☐☐ If ☐ (XFEED) ENG '↓' When ☐ OMS QTY: 5%: ☐ OMS TK ISOL (two) – OP 4%: ☐ OMS TK ISOL (two) – CL If ☐ (STRAIGHT FEED) ENG '↓' OMS ENG FAIL: At ΔVTOT = ☐☐☐ or ☐ ☐☐ at ☐☐ % ☐ TK ISOL (two) – OP ☐ TK ISOL (two) – CL Return to 2 ENG, 2 POD FLOW: At ΔVTOT = ☐☐☐ ☐ TK ISOLs – OP OMS ENG FAIL: (XFEED CUE) OMS QTY ☐☐ %L or ☐☐ %R
DEORBIT BURN (MIXED XFEED)	FEED FROM GOOD POD: At ΔVTOT = ☐☐☐ or ☐ ☐☐ at ☐☐ % ☐ OMS He PRESS (two) – OP TK ISOL (two) – OP XFEED (two) – OP Secure ☐ OMS OMS PRPLT LOW: AFT RCS RECONFIG at ΔVTOT = ☐☐☐ OMS ENG FAIL: ☐ OMS He PRESS (two) – OP TK ISOL (two) – OP ☐ OMS XFEED (two) – CL

This Page Intentionally Blank

AOA PROCEDURES

1: GNC OMS 2 MNVR EXEC	2: GNC OMS 2 MNVR EXEC
3: BFS, GNC OMS 2 MNVR EXEC	

P **HYD DEPRESS**

R4 √HYD MPS/TVC ISOL VLV (three) – CL
R2 √APU SPEED SEL (three) – NORM
√AUTO SHTDN (three) – ENA
HYD MN PUMP PRESS (three) – LO (MA)

FES & HEATER ACTIVATION

C L2 FLASH EVAP FDLN HTR (two) – 1

P R1 O2 TK1,2 HTRS B (two) – AUTO
H2 TK1,2 HTRS B (two) – AUTO

MS1 A12 APU HTR TK/FU LN/H2O SYS 1A,2A,3A (three) – AUTO

AC BUS SNSR

R1 AC BUS SNSR (three) – OFF (1 sec), then AUTO TRIP

MAJOR MODE CHANGE

CRT1 GNC, OPS 105 PRO

Select any AOA I_TGT (3-12) to set AOA flag, but <u>do not</u> load until OPS 3

1: GNC OMS 2 MNVR EXEC	2: GNC OMS 2 MNVR EXEC

3: BFS, GNC OMS 2 MNVR EXEC

NOTE
Manually entered tgt data will be carried over to OPS 3 except: PASS, BFS ITEMS 5 and 18 (ILL ENTRY).

Transition to OPS 3 NLT TIG-10 min

C4F, R3A — Stow ASC PKT
Stow ASCENT Cue Cards

R3F — Unstow ENT PKT

F6,F8 — Install AOA DEORBIT BURN and DEORBIT BURN MONITOR Cue Cards (R3A)

IF APUs SHUTDN:

WARNING
Ice in W/B Steam Vent may cause loss of APU/HYD

P **W/B STEAM VENT HTR ACT**

3: BFS, SM SYS SUMM 2

√APU OIL IN TEMP (three) < 230 degF
√OUT TEMP (three) < 230 degF

NOTE
If any temp > 230, wait until temp < 230 in aff system

R2 √BLR CNTLR/HTR (three) – A
PWR (three) – ON
N2 SPLY (three) – ON

1: GNC OMS 2 MNVR EXEC	2: GNC OMS 2 MNVR EXEC
3: BFS, GNC OMS 2 MNVR EXEC	

P **MPS ISOL**

NOTE
Expect multiple MAs for MPS He P
as regs bleed down

R2 MPS He ISOL (six) – GPC
PNEU He ISOL – GPC
√He I'CNCT (three) – GPC

MPS GH2 INERTING

R4 MPS H2 PRESS LINE VENT – OP
(Start watch)
After 1 min:
MPS H2 PRESS LINE VENT – GND

1: GNC OMS 2 MNVR EXEC	2: GNC OMS 2 MNVR EXEC

3: BFS, GNC OMS 2 MNVR EXEC

P **ET UMBILICAL DOOR CLOSURE**

* If Feedline fail, √MCC before closure *

> WARNING
> ET CTRLINE LATCHES must be stowed prior to L,R DR closure to prevent door drive damage

* If ET Doors will not manually close and *
* latch, prior to OPS 3 transition: *
* 2: GNC 51 OVERRIDE *
* ET UMB DR CLOSE – ITEM 40(30) EXEC *

NOTE
Double times for single motor operation

R2 ET UMB DR
MODE – GPC/MAN
CTRLINE LAT – STO
√After 6 sec, CTRLINE LAT tb – STO

* If CTRLINE LAT does not stow within 12 sec: *
* CTRLINE LAT – GND *
* √MCC *

CTRLINE LAT – GND
L,R DR (two) – CL (tb-bp)
√After 24 sec, L,R DR tb (two) – CL

* If doors do not close within 48 sec: *
* L,R DR (two) – OFF *
* √MCC *

L,R LAT (two) – LAT (tb-bp)
√After 6 sec, L,R LAT tb (two) – LAT

* If doors do not latch within 12 sec: *
* L,R DR (two) – OFF *
* LAT (two) – OFF *
* √MCC *

L,R DR (two) – OFF
LAT (two) – OFF
MODE – GPC

1: GNC OMS 2 MNVR EXEC	2: GNC OMS 2 MNVR EXEC
3: BFS, GNC OMS 2 MNVR EXEC	

RECONFIG DPS FOR ENTRY

> CAUTION
> If recovering string(s) due to failed GPC(s), all FCS CH(s) to AUTO prior to OPS 301 PRO

CRT1 GNC, OPS 301 PRO (√DAP)
CRT3 BFS, GNC, OPS 301 PRO

CRT1 GNC, OPS 302 PRO

1: GNC 50 HORIZ SIT	2: GNC DEORB MNVR EXEC
3: BFS, GNC DEORB MNVR EXEC	

√RWY Selection
AOA RWY OPTIONS

ALL INCLINATIONS				
SITE	RWY	TACANS	ITEM 5	MLS
1	KSC 15 KSC 33	TTS 59Y	COF 97	8 6
42	NOR 17 NOR 23	SNG 121Y	HMN 92	6 6
43	NOR 05 NOR 35	SNG 121Y	HMN 92	– –
44	EDW 15 EDW 18L	EDW 111	LHS 21	– –
45	EDW 22 EDW 04	EDW 111	LHS 21	8/† 6

† MSBLS Jr. Channel 8 – Requires Uplink

1: GNC 50 HORIZ SIT	2: GNC DEORB MNVR EXEC
3: BFS, GNC DEORB MNVR EXEC	

1: GNC DEORB MNVR EXEC

B **OMS 2 BURN SETUP**

CRT1 √Or enter Target (steep or shallow based on ΔV capability) from OMS TARGETS or MCC

TRIM LOAD – ITEM 6 +0.4 -5.7 +5.7 EXEC

```
* For single eng burn (good eng):              *
*     TRIM LOAD LY  – ITEM 7 +5.2 EXEC  *
*                RY  – ITEM 8 -5.2 EXEC  *
*     OMS L         – ITEM 2 EXEC       *
*           R       – ITEM 3 EXEC       *
* For RCS burn:                           *
*     RCS SEL       – ITEM 4 EXEC       *
```

NOTE

Onboard computed TIG and θ_t may vary slightly and are acceptable if REI is correct

LOAD – ITEM 22 EXEC
TIMER – ITEM 23 EXEC

CRT3 √BFS TGT

Fill in AOA DEORBIT BURN CARDS from AOA DEL PAD, 6-2 or 6-3

1: GNC DEORB MNVR EXEC	2: GNC DEORB MNVR EXEC
3: BFS, GNC DEORB MNVR EXEC	

C **OMS TVC GMBL CHECK**
(Perform during S-band AOS)

CRT1 SECONDARY CHECK

Perform SEC L,R then PRI L,R GMBL CK

* If down arrow(s) or M(s): *
* Select good GMBL *

SEAT ADJUSTMENT

Adjust Back Angle

P **OMS BURN PREP**

* For single eng burn/No PROP failures: *
* XFEED failed eng PROP to good eng *

O8 L,R OMS
√He PRESS/VAP ISOL A (two) – GPC
B (two) – CL
√TK ISOL (four) – GPC (tb-OP)
√XFEED (four) – GPC (tb-CL)

RCS BURN PREP (I'CNCT OMS to RCS)

P O8 L,R OMS
He PRESS/VAP ISOL (four) – CL
TK ISOL (four) – OP (tb-OP)
L OMS XFEED (two) – OP (tb-OP)
R OMS XFEED (two) – CL (tb-CL)
O7 AFT L,R RCS
XFEED (four) – OP (tb-OP)
TK ISOL (six) – CL (tb-CL)

1: GNC DEORB MNVR EXEC	2: GNC DEORB MNVR EXEC

3: BFS, DEORB MNVR EXEC

OMS BURN TIG ADJUST (if reqd)

CRTX LOAD – ITEM 22 EXEC
TIMER – ITEM 23 EXEC

Determine ΔTIG (if REI – REF > 50)
from OMS TARGETS

CRTX Enter new TIG

LOAD – ITEM 22 EXEC
TIMER – ITEM 23 EXEC

Repeat until ΔRANGE < 50

CRT3 √BFS TGT

MNVR TO DEORBIT BURN ATTITUDE

B F6,F8 √ADI ATT (two) – INRTL
√ERR (two) – 5
√RATE (two) – 5

C MNVR – ITEM 27 EXEC (*)
(√ADI ATT with CRT BURN ATT)

3: BFS, GNC SYS SUMM 2

TIG-5 B R3A Go to AOA DEORBIT BURN (Cue Card)

This Page Intentionally Blank

AOA DEORBIT BURN AND DEORBIT BURN MONITOR CARDS

DEORBIT BURN MONITOR

OMS TEMP*	L R	
FU IN P	≥ 230 230	OMS ENG FAIL
	≤ 214 212	OMS PRPLT FAIL
or No FU IN P		
OMS PC* & OMS ↓ (BFS: √accel)		
ENG VLV 1 or 2 < 70		OMS ENG FAIL
or OX IN P > 227		
OX IN P ≤ 227 or No OX IN P		OMS PRPLT FAIL
OMS OX/FU TK P (√ENG IN P)		
OX/FU LOW		He PRESS/VAP ISOL (two) – OP If aff TK P not incr: He PRESS/VAP ISOL (two) – CL At PC < 72 or OMS TEMP: OMS PRPLT FAIL
OX & FU HIGH		He PRESS/VAP ISOL (two) – CL Cycle He A(B) to maintain TK P 234-284
OMS GMBL	PRI fail	L(R) OMS GMBL – SEC (twice)
	SEC fail	If high RCS usage: OMS ENG FAIL
GPC	**1(4) &** Burning OMS aff	aff GPC PWR – OFF If SEC GMBL avail: aff MDM FF 1(4) – OFF,ON L(R) OMS GMBL – SEC (twice)
	SEC GMBL lost	If high RCS usage: OMS ENG FAIL
	2 FAs lost	√MAN SHUTDN
I/O ERROR FA	**1(4)**	L(R) OMS GMBL – SEC
		I/O RESET (if recov: BFS I/O RESET) If high RCS usage: OMS ENG FAIL
	2 FAs lost	√MAN SHUTDN
BCE STRG D		I/O RESET (if recov: >>)
	1(4)	If high RCS usage: L(R) OMS GMBL – SEC (twice)
RM DLMA IMU		
or	**ABOVE SAFE** HP ⇒ [ ][ ]	STOP BURN: OMS ENG(s) – OFF >>
GPC SET SPLIT		
or		
2 MN BUSES	**BELOW SAFE** HP ⇒	IMU DLMA: After C/O: √timer [G21] If any IMU ACC > 0.03: aff IMU – desel I'cnct OMS to RCS (√RCS Burn Time) THC +X to TGT HP (EOM) or 3.5 x timer at C/O (AOA) SET SPLIT: Go to "GPC" above
I/O ERROR PCM		OI PCMMU PWR – 2(1)

*If XFD, BLDN, or sensor fail, monitor ENG IN P for off-nominal performance

ENT-2a/122/A,O,D,E/A

This Page Intentionally Blank

AOA DEORBIT BURN (2 ENG)

√MM302 √OMS BOTH
Enter TGO + 5 sec
√TRIM: P +0.4, LY -5.7, RY +5.7
L,R OMS He PRESS/VAP ISOL A (two) – GPC
B (two) – OP
√DAP – AUTO(PASS)/DISC
ADI – LVLH(REF)/HI/MED
FLT CNTLR PWR (two) – ON

TIG-2 OMS ENG (two) – ARM/PRESS
- :15 EXEC
- :15 If OMS AFT QTY < 11%, THC +X to OMS IGN + 1 sec
:00 Start watch (√P_C, ΔVTOT, ENG VLVs)

* **OMS PRPLT FAIL** (CONTINUE BURN): *
* Failed OMS ENG – OFF *
* ITEM 18 +0 EXEC *
* When good OMS QTY: *
* 5%: L, R OMS XFEED (four) – OP *
* 4%: Good OMS TK ISOL (two) – CL *
* If OMS P_C < 80 or OMS TEMP, *
* OMS ENG – OFF *
* √ADI – LVLH, center needles *
* RCS COMPLETION *
* **OMS ENG FAIL:** *
* Failed OMS ENG – OFF *
* OMS XFEED at 1/2 ΔVTOT at fail [ ][ ][ ] *
* or OMS QTY [ ][ ] %L or [ ][ ] %R *
* **2nd OMS FAIL (ENG or PRPLT):** *
* Failed OMS ENG – OFF *
* If PRPLT FAIL: *
* Secure aff OMS *
* ITEM 18 +0 EXEC *
* √ADI – LVLH, center needles *
* Interconnect good OMS to RCS *
* THC +X (√OMS% vs RCS Burn Time) *
* RCS I'CNCT TK SW (N/A for OMS PRPLT FAIL) *
* THC +X (√OMS% vs RCS Burn Time) *
* AFT RCS RECONFIG *
* RCS COMPLETION *

ASC-8a/A/E

HINGE

```
* RCS COMPLETION:                                                  *
*    If DIRECT INSERTION:                                          *
*       THC +X to ΔVTOT = 0 or TOT AFT QTY 1 [ ][ ][ ]%            *
*                                                                  *
*                                  THC +X to FLIP ΔV or            *
*       At AFT QTY 1                TOT AFT QTY 2 [5][3] % then    *
*        if CUR ΔVTOT:              FRCS COMPLETION                *
*                                                                  *
*       FLIP [4][8]-----------------------------------------------*
*        ΔV                        FRCS COMPLETION                *
*                                                                  *
*       AFT  [2][9]-----------------------------------------------*
*        ΔV                        THC +X to TGT ΔV               *
*                                                                  *
*       TGT  [0][0]-----------------------------------------------*
*        ΔV                                                        *
*                                                                  *
*    If w/OMS 1:                                                   *
*       THC +X to TGT HP or TOT AFT QTY 1 [ ][ ][ ]%               *
*                                                                  *
*                                  THC +X to FLIP HP or            *
*       At AFT QTY 1                TOT AFT QTY 2 [5][3] % then    *
*        if CUR HP:                 FRCS COMPLETION                *
*                                                                  *
*       FLIP [ ][ ]-----------------------------------------------*
*        HP                        FRCS COMPLETION                *
*                                                                  *
*       AFT  [ ][ ]-----------------------------------------------*
*        HP                        THC +X to TGT HP               *
*                                                                  *
*       TGT  [ ][ ]-----------------------------------------------*
*        HP                                                        *
*                                                                  *
* FRCS COMPLETION:                                                 *
*    Mnvr to -X Att (pitch up at 3°/sec to VGOz = +1/4 ΔVTOT)      *
*    THC -X to ΔVTOT = 0 or FRCS depletion (JETS FAIL OFF)         *

CUTOFF
+ :02    OMS ENG(s) – OFF (If < 3 IMU, at [ ]:[ ][ ] )
            *  AFT RCS RECONFIG if INTERCONNECT  *
         Trim X,Z residuals < 2 fps (< 0.5 fps if shallow)
                                                   ASC-8aa/122/A/A
```

AOA DEORBIT BURN (1 ENG)

√MM302 √OMS L or R
√OMS BURN CONFIG (L or R XFEED)
Enter TGO + 10 sec
√TRIM: P +0.4, LY +5.2, RY -5.2
L,R OMS He PRESS/VAP ISOL A (two) – OP
. . . Wait 2 sec . . . B (two) – OP
√DAP – AUTO(PASS)/DISC
ADI – LVLH(REF)/HI/MED
FLT CNTLR PWR (two) – ON
TIG-2 Good OMS ENG – ARM/PRESS
- :15 EXEC
- :15 If OMS AFT QTY < 11%, THC +X to OMS IGN + 1 sec
:00 Start watch (√P_C, ΔVTOT, ENG VLVs)

OMS XFEED RETURN at ΔVTOT = [ ][ ][ ]
or [ ] [ ][ ] at [ ][ ] %
L,R OMS TK ISOL (four) – OP
XFEED (four) – CL

* **OMS PRPLT FAIL** (CONTINUE BURN): *
* OMS ENG – OFF *
* ITEM 18 +0 EXEC *
* Secure aff OMS *
* √ADI – LVLH, center needles *
* Interconnect good OMS to RCS *
* THC +X (√OMS% vs RCS Burn Time) *
* AFT RCS RECONFIG *
* RCS COMPLETION *
* **OMS ENG FAIL** (CONTINUE BURN): *
* OMS ENG – OFF *
* √ADI – LVLH, center needles *
* Interconnect good OMS to RCS *
* THC +X (√OMS% vs RCS Burn Time) *
* RCS I'CNCT TK SW *
* THC +X (√OMS% vs RCS Burn Time) *
* AFT RCS RECONFIG *
* RCS COMPLETION *
* **RCS +X JET FAIL OFF:** *
* ITEM 18 +0 EXEC *
* [G23] Resel jet *

ASC-8b/A/B

HINGE

```
* RCS COMPLETION:                                                  *
*     If DIRECT INSERTION:                                         *
*        THC +X to ΔVTOT = 0 or TOT AFT QTY 1 [ ][ ][ ]%           *
*                                                                  *
*                                THC +X to FLIP ΔV or              *
*        At AFT QTY 1             TOT AFT QTY 2 [5][3] % then      *
*         if CUR ΔVTOT:           FRCS COMPLETION                  *
*                                                                  *
*        FLIP [4][8]-----------------------------------------------*
*         ΔV                                                       *
*                                FRCS COMPLETION                   *
*                                                                  *
*        AFT  [2][9]-----------------------------------------------*
*         ΔV                                                       *
*                                THC +X to TGT ΔV                  *
*                                                                  *
*        TGT  [0][0]-----------------------------------------------*
*         ΔV                                                       *
*                                                                  *
*     If w/OMS 1:                                                  *
*        THC +X to TGT HP or TOT AFT QTY 1 [ ][ ][ ]%              *
*                                                                  *
*                                                                  *
*                                THC +X to FLIP HP or              *
*        At AFT QTY 1             TOT AFT QTY 2 [5][3] % then      *
*         if CUR HP:              FRCS COMPLETION                  *
*                                                                  *
*        FLIP [ ][ ]-----------------------------------------------*
*         HP                                                       *
*                                FRCS COMPLETION                   *
*                                                                  *
*        AFT  [ ][ ]-----------------------------------------------*
*         HP                                                       *
*                                THC +X to TGT HP                  *
*                                                                  *
*        TGT  [ ][ ]-----------------------------------------------*
*         HP                                                       *
*                                                                  *
* FRCS COMPLETION:                                                 *
*     Mnvr to -X Att (pitch up at 3°/sec to VGOz = +1/4 ΔVTOT)     *
*     THC -X to ΔVTOT = 0 or FRCS depletion (JETS FAIL OFF)        *

CUTOFF
+ :02    OMS ENG – OFF (If < 3 IMU, at [ ]:[ ][ ] )
            *  AFT RCS RECONFIG if INTERCONNECT  *
         Trim X,Z residuals < 2 fps (< 0.5 fps if shallow)
```

ASC-8bb/122/A/A

AOA DEORBIT BURN (RCS)

√MM302 √RCS SEL
√RCS BURN CONFIG (L OMS I'CNCT)

L,R OMS He PRESS/VAP ISOL A (two) – OP
. . . Wait 2 sec . . . B (two) – OP

√DAP – INRTL/DISC
ADI – LVLH(REF)/MED/MED
FLT CNTLR PWR (two) – ON

TIG THC +X
Maintain PITCH ATT ERR ± 3°
Monitor ΔVTOT
RCS I'CNCT TK SW at ΔVTOT = [ ][ ][ ]
R OMS XFEED (two) – OP
L OMS XFEED (two) – CL

OMS PRPLT LOW
AFT RCS RECONFIG AT ΔVTOT = [ ][ ][ ]
RCS COMPLETION

* **OMS PRPLT FAIL (MULTIPLE JETS FAIL OFF):** *
* Secure aff OMS *
* ITEM 18 +0 EXEC *
* [G23] Resel jets *
* Interconnect good OMS to RCS *
* THC +X (√OMS% vs RCS Burn Time) *
* AFT RCS RECONFIG *
* RCS COMPLETION *
* **RCS +X JET FAIL OFF:** *
* ITEM 18 +0 EXEC *
* [G23] Resel jets *

ASC-7a/A/B

HINGE

```
*  RCS COMPLETION:                                                  *
*     If DIRECT INSERTION:                                          *
*        THC +X to ΔVTOT = 0 or TOT AFT QTY 1 [ ][ ][ ] %           *
*                                                                   *
*                                  THC +X to FLIP ΔV or             *
*        At AFT QTY 1               TOT AFT QTY 2 [5][3] % then    *
*         if CUR ΔVTOT:             FRCS COMPLETION                *
*                                                                   *
*        FLIP [4][8]=========================================       *
*         ΔV                                                        *
*                                  FRCS COMPLETION                  *
*        AFT  [2][9]=========================================       *
*         ΔV                                                        *
*                                  THC +X to TGT ΔV                 *
*        TGT  [0][0]=========================================       *
*         ΔV                                                        *
*                                                                   *
*     If w/OMS 1:                                                   *
*        THC +X to TGT HP or TOT AFT QTY 1 [ ][ ][ ] %              *
*                                                                   *
*                                  THC +X to FLIP HP or             *
*        At AFT QTY 1               TOT AFT QTY 2 [5][3] % then    *
*         if CUR HP:                FRCS COMPLETION                *
*                                                                   *
*        FLIP [ ][ ]=========================================       *
*         HP                                                        *
*                                  FRCS COMPLETION                  *
*        AFT  [ ][ ]=========================================       *
*         HP                                                        *
*                                  THC +X to TGT HP                 *
*        TGT  [ ][ ]=========================================       *
*         HP                                                        *
*                                                                   *
*  FRCS COMPLETION:                                                 *
*     Mnvr to -X Att (pitch up at 3°/sec to VGOz = +1/4 ΔVTOT)      *
*     THC -X to ΔVTOT = 0 or FRCS depletion (JETS FAIL OFF)         *
```

CUTOFF:

VGOx = 0, release THC
AFT RCS RECONFIG
Trim Inplane X,Z residuals < 2 fps (< 0.5 fps if shallow)

ASC-7aa/122/A/A

This Page Intentionally Blank

POST D/O
BURN

AOA POST DEORBIT BURN

1: GNC DEORB MNVR EXEC	2: GNC DEORB MNVR EXEC
3: BFS, GNC SYS SUMM 2	

B F6,F8 FLT CNTLR PWR (two) – OFF
C3 √DAP: AUTO

P **OMS/RCS POST BURN RECONFIG**

POST D/O BURN

IF I'CNCT

Perform I'CNCT RETURN
(ENT PKT, RCS)

O7 AFT L,R RCS
√He PRESS (four) – OP (tb-OP)
√TK ISOL (six) – GPC (tb-OP)
MANF ISOL 1,2,3,4 (eight) – OP (tb-OP)
√XFEED (four) – GPC (tb-CL)

O8 FWD RCS
TK ISOL (two) – OP (tb-OP)
L,R OMS
He PRESS/VAP ISOL (four) – CL
TK ISOL (four) – OP (tb-OP)

* If OMS PRPLT FAIL: *
* √Aff TK ISOL (two) – CL *

XFEED (four) – CL (tb-CL)

Determine Prebank
Determine ∆HP (CUR HP -TGT HP)

Use RECOVERY PREBANK TABLES
Record Prebank on ENTRY MANEUVERS
Cue Card

1: GNC DEORB MNVR EXEC	2: GNC DEORB MNVR EXEC

3: BFS, GNC SYS SUMM 2

RECOVERY PREBANK TABLES (KSC)

NOTE: APPLICABLE ONLY IF OMS 1 REQD

(ATO/AOA steep entries) **KSC**

ΔHP	0	3	6	9	12	15	19	23	26
PREBANK	0	45	75	90	100	105	115	140	175

(ATO/AOA shallow entries) **KSC**

ΔHP	0	1	2	3	4	5	6	7	9
PREBANK	90	105	115	120	125	135	145	155	175

122 octfr1

C **POST BURN STATUS**

NOMINAL

ΔTIG

P CRT2 **GNC, OPS 303 PRO**

1: GNC DEORB MNVR COAST	2: GNC DEORB MNVR COAST

1: GNC DEORB MNVR COAST	2: GNC DEORB MNVR COAST
3: BFS, GNC SYS SUMM 2	

C CRT1 √Uplinked INRTL EI-5 MM303 ATT with DEL PAD

```
* If no Deorbit TGT uplink, enter INRTL  *
*   EI-5 MM303 ATT from DEL PAD:         *
*       R – ITEM 24 + __ __ __  __ __ __ *
*       P – ITEM 25 + __ __ __  __ __ __ *
*       Y – ITEM 26 + __ __ __  __ __ __ *
```

Mnvr to EI-5 ATT – ITEM 27 EXEC (*)

```
* If UNDERBURN or no DEL PAD,            *
*   manually mnvr to LVLH R001, Y358,    *
*   P per table below                    *
```

TIME to EI (min)	LVLH PITCH (deg)
20	339
	343
	347
	351
	355
15	359
	3
	7
	11
	15
10	19
	23
	27
	31
	35
5	39

1: GNC DEORB MNVR COAST	2: GNC DEORB MNVR COAST
3: BFS, GNC SYS SUMM 2	

C **OMS GMBL PWRDN (PASS ONLY)**

CRT1 Verify GMBL positions:

	L	R
P	+5.9	+5.9
Y	+6.4	-6.4

GMBL OFF – ITEM 32 EXEC
– ITEM 33 EXEC

1: GNC 53 CONTROLS	2: BFS, GNC SYS SUMM 2
3: GNC DEORB MNVR COAST	

C **SECONDARY ACTUATOR CHECK (ON MCC GO)**

NOTE

If port does not bypass during check, bypass affected port after check:
SEC ACT BYPASS – ITEM 8 +X X EXEC
If affected port still does not bypass:
SEC ACT RESET – ITEM 9 +X X EXEC

R2 1. HYD MN PUMP PRESS (one) – NORM

CRT3 2. SURF DRIVE ON, ITEM 39 EXEC (*), wait at least 5 sec

SPI √SPI: Stop drive test when elevon posns within +12° to -27°:
SURF DRIVE OFF, ITEM 40 EXEC (*)

CRT1 3. √POS STIM ENA, ITEM 7 – (no *)

C3 4. √FCS CH 1,2,3,4 – AUTO

CRT1 5. SEC ACT CK, CH 1 – ITEM 1 EXEC (*)
CK START – ITEM 5 EXEC (*)

6. √All CH 1 ports bypass '↓'
STOP – ITEM 6 EXEC (*)

C3 7. FCS CH 1 – ORIDE
CRT1 √All CH 1 ports reset no '↓'
C3 FCS CH 1 – AUTO

8. Repeat steps 5 thru 7 for CH 2,3,4

R2 9. HYD MN PUMP PRESS (three) – LO

1: GNC 53 CONTROLS	2: BFS, GNC SYS SUMM 2
3: GNC DEORB MNVR COAST	

1: GNC 23 RCS	2: GNC DEORB MNVR COAST
3: BFS, GNC SYS SUMM 2	

P **FRCS DUMP**

Determine FWD RCS 'DUMP TO %' using lowest of OX or FU qty (calculator or DEL PAD)

FOUR JET DUMP:

FRCS PRPLT TO BE DUMPED (%)

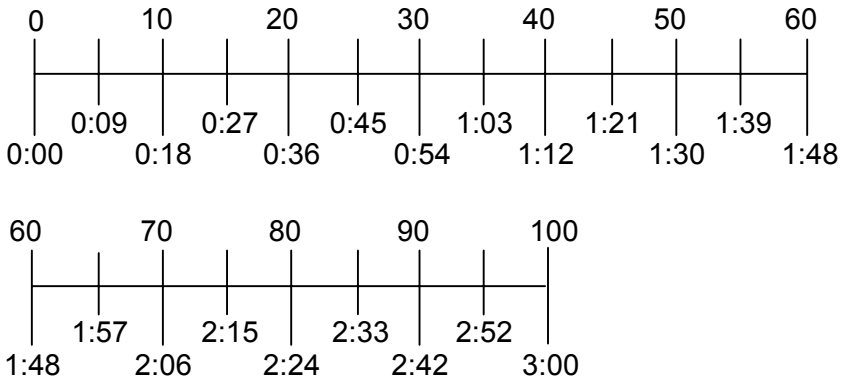

TIME FROM DUMP INITIATION (M:S)

NOTE
During dump, disregard FRCS qty

1: GNC 23 RCS	2: GNC DEORB MNVR COAST
3: BFS, GNC SYS SUMM 2	

TWO JET DUMP:

FRCS PRPLT TO BE DUMPED (%)

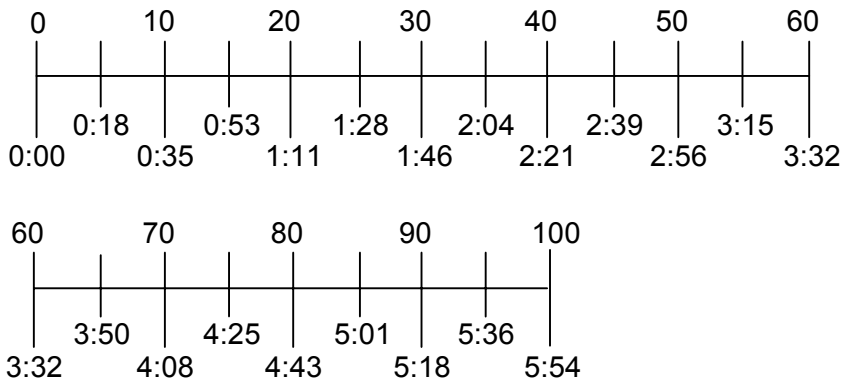

TIME FROM DUMP INITIATION (M:S)

NOTE

During dump, disregard FRCS qty

CRT2 FWD RCS ARM – ITEM 36 EXEC
DUMP – ITEM 37 EXEC
(Start watch)
When dump time achieved:
FWD RCS OFF – ITEM 38 EXEC

1: GNC DEORB MNVR COAST

1: GNC DEORB MNVR COAST	2: GNC DEORB MNVR COAST
3: BFS, GNC SYS SUMM 2	

2: GNC 50 HORIZ SIT
3: BFS, GNC 50 HORIZ SIT

HORIZ SIT CONFIG

ALTM – ITEM 9 + [ ][ ][.][ ][ ]

	PASS ITEM		BFS ITEM	
PTI	INH	√1		
LAND SITE (AOA DEL PAD)		√41		√41
RWY (AOA DEL PAD)		√3		√3
		√4		√4
TAC (per AOA RWY)		√5		√5
RA	blank	√46		
TAEM TGT				
G&N	OVHD	√6	blank	
HSI	blank		blank	
XEP	NEP	√7	NEP	√7
AIM (AOA DEL PAD)	NOM	√8	NOM	√8
	(or CLSE)		or (CLSE)	
SPDBK	NOM	√39		
TAC	INH	√20	INH	√20
GPS	INH	√43	INH	√43
DRAG H	AUT	√22	AUT	√22
ADTA H	INH	√26	INH	√26
ADTA TO G&C	INH	√29	AUT	√28
TAC	DELTA	√35		
DES any failed TACANS		√		√
AIF_G	INH	√48		

* If BFS engaged: *
* Set HSD BFS ITEMS to PASS Config *

1: GNC DEORB MNVR COAST	2: GNC 50 HORIZ SIT
	3: BFS, GNC 50 HORIZ SIT

ENTRY SW CHECK

B F6,F8 Stow AOA DEORBIT BURN Cue Cards (R3A)
R3A Install ENTRY Cue Cards

NOTE
If NAVAIDS 'OFF' due to PKT C/L PWRDN, switch 'ON' per pwrdn procedure

P O7 √TACAN MODE (three) – GPC
√ANT SEL (three) – AUTO
CH (three) – 111 (EDW)
– 059Y (KSC)
– 121Y (NOR)

O8 √RADAR ALTM (two) – ON
MLS (three) – ON (PASS)
√CH (three) – 8 EDW 22 KSC 15
– 6 KSC 33 EDW 04
NOR 17 NOR 23
I/O RESET

C L2 √CAB RELIEF (two) – ENA (tb-ENA)
√ANTISKID – ON
√NWS – 1
√ENTRY MODE – AUTO
3: GNC 51 OVERRIDE
√ROLL MODE – AUTO

B L2,C3 √SBTC (two) – full fwd
C3 √SRB SEP – AUTO
√ET SEP – AUTO
F6,F8 √AIR DATA (two) – NAV
√ADI ERR (two) – 5
√RATE (two) – 5
√HSI SEL MODE (two) – ENTRY
C F6 √SOURCE (two) – NAV, 1
P F8 √SOURCE (two) – NAV, 2
B F3 √TRIM RHC/PNL (two) – INH
√PNL (two) – ON
F6,F8 √RADAR ALTM (two) – 1(C), 2(P)

1: GNC DEORB MNVR COAST	2: GNC 50 HORIZ SIT

3: GNC 51 OVERRIDE

```
* If APUs shut down:        *
*     Perform APU RESTART   *
*       (ENT PKT, APU/HYD)  *
```

PRE EI CHECKLIST

```
* If less than four PASS GPCs, config FCS      *
*   CHs so that each GPC cmd equals number     *
*   of CHs.  See table on POST OPS 3/GRTLS     *
*   TRANSITION RESTRING (Cue Card)             *
*                                              *
*   GNC 53 CONTROLS                            *
*                                              *
*   Config SURF FBK (See table on POST         *
*   OPS 3/GRTLS TRANSITION RESTRING            *
*   (Cue Card)                                 *
```

2: GNC DEORB MNVR COAST

3: BFS, GNC DEORB MNVR COAST

B	F6,F8	FLT CNTLR PWR (two) – ON
P		If SECONDARY ACTUATOR CHECK performed:
	R2	HYD MN PUMP PRESS (one) – NORM
		Go to ENTRY MANEUVERS (Cue Card)

OMS FAILURE

OMS
FAILURE

OMS FAILURES

LEFT OMS

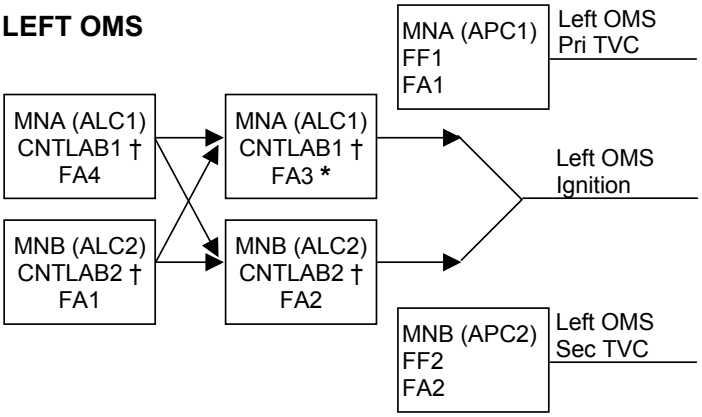

† If CNTL AB1 or AB2 (CA1 or CA2) failed and ign path still exists at OMS fail, assume L(R) OMS ↓ is PRPLT FAIL

* If L(R) P_c failed high during burn, or FA3(4) failed, at L(R) OMS fail, no guidance downmode after L(R) OMS ENG switch OFF (TGO slow, ADI needles in error, 6 ft/s underburn)

RIGHT OMS

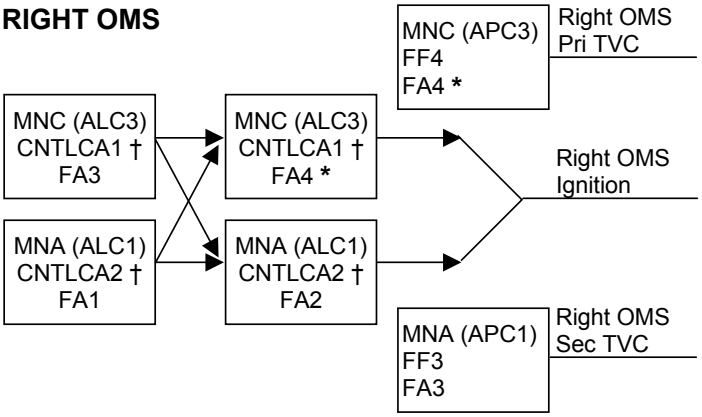

If two FA MDMs lost		
MDMs	Preburn: ENG – OFF	During burn: MAN SHUTDN
1,2	LEFT (TVC)	BOTH
1,3	RIGHT (IGN)	LEFT
1,4	LEFT (IGN)	RIGHT
2,3	LEFT (IGN)	RIGHT
2,4	RIGHT (IGN)	LEFT
3,4	RIGHT (TVC)	BOTH

ASC-5b/A,O,E/I

OMS/RCS ΔV

OMS/ RCS ΔV

OMS He PRESS/ΔV/BURN TIME

OMS% GAGE	OMS He Press	OMS ΔV	RCS ΔV	RCS BURN MIN:SEC
86.8	4320	429	355	13:16
85	4250	420	347	12:59
80	4050	395	326	12:11
75	3850	369	305	11:23
70	3650	343	284	10:35
65	3450	317	263	09:47
60	3250	292	242	08:58
55	3050	266	220	08:10
50	2850	240	199	07:22
45	2650	214	178	06:34
40	2450	188	156	05:46
35	2250	162	135	04:58
30	2050	135	113	04:10
25	1850	109	91	03:22
20	1650	83	70	02:34
15	1450	56	48	01:45
10	1250	30	25	00:55
5	1050	3	3	00:06

OMS/ RCS ΔV

OMS-2/AOA ΔV
ARCS ΔV fps = [0.7] x [L% + R% – AFT QTY 1]
FRCS ΔV fps = [0.8] x FRCS %
OMS ΔV fps = [5.1] x OMS %

NOTE: Uses assumed vehicle weight of [256,380] lb

OMS TARGETS, COMM COVERAGE, LAND SITES

OMS TGTS

STS-122 OCFR1 CY
OMS TARGETS - DIRECT INSERTION

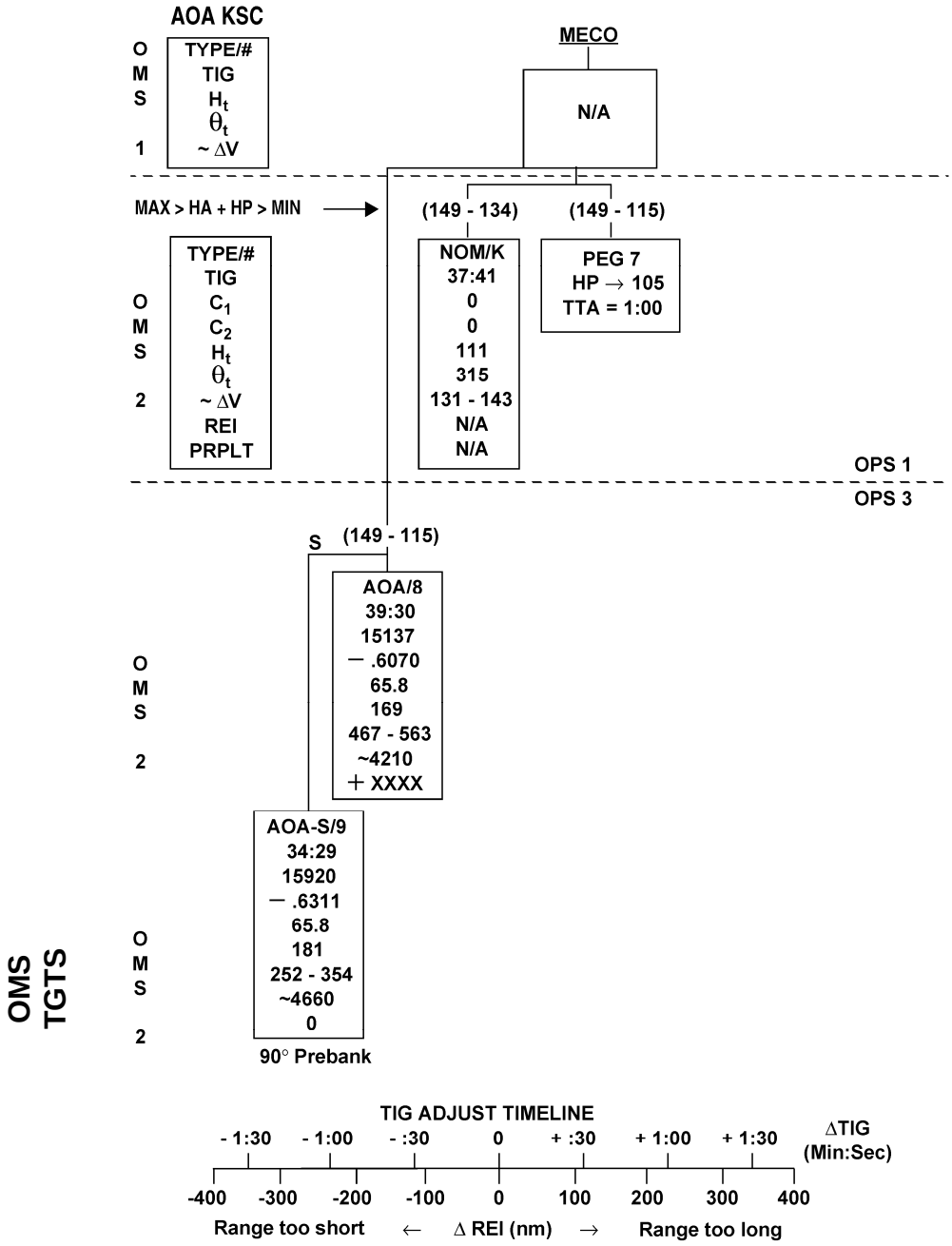

OMS TGTS

STS-122 OCFR1 CY
OMS TARGETS - W/OMS 1

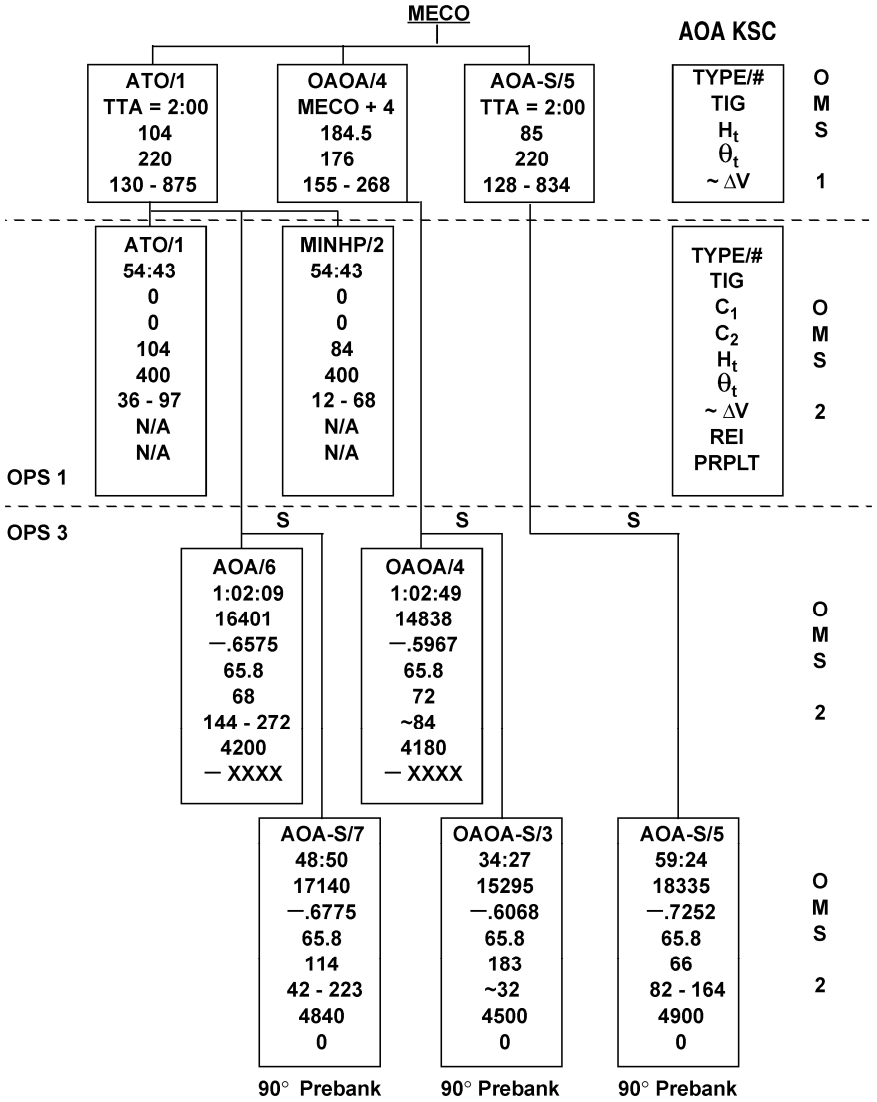

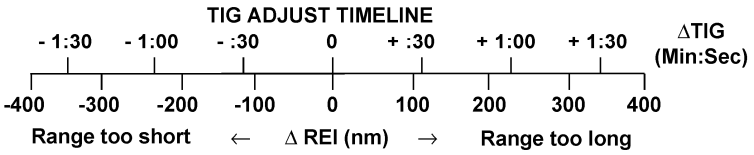

STS-122 OCFR1 CY
OMS TARGETS - DIRECT INSERTION

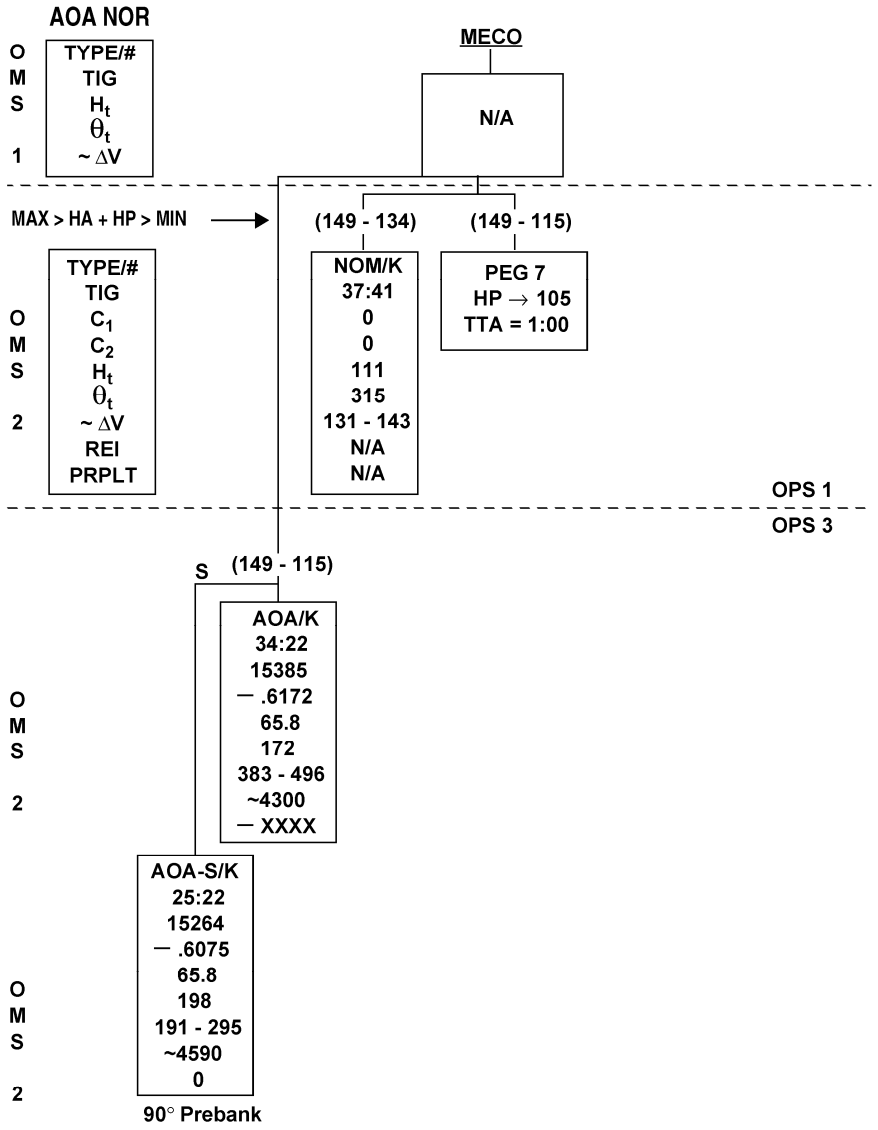

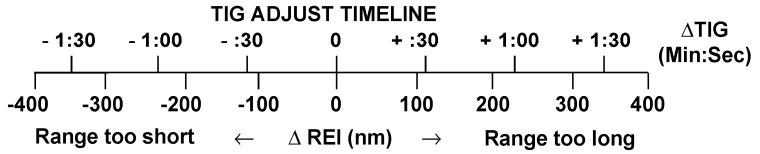

STS-122 OCFR1 CY
OMS TARGETS - W/OMS 1

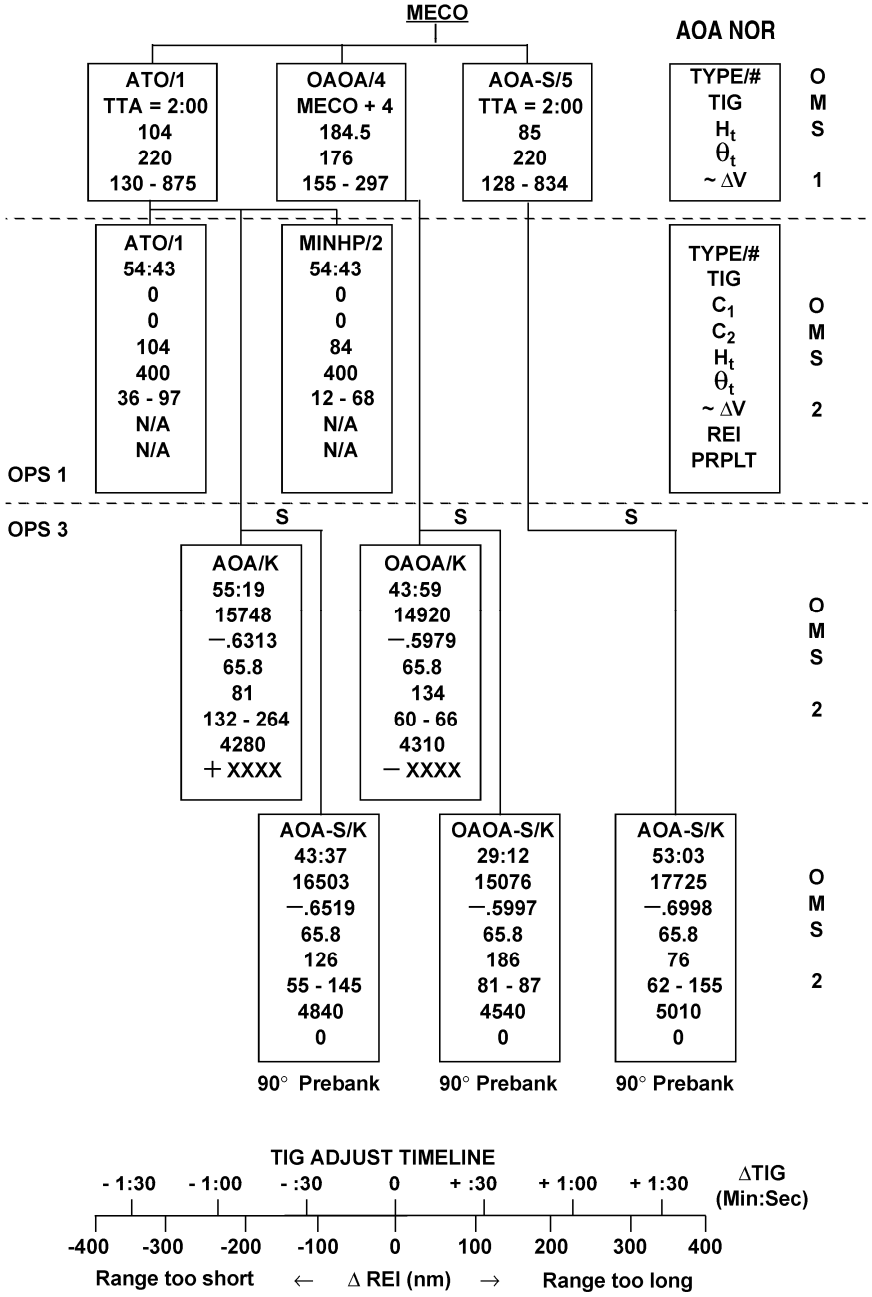

COMM COVER

COMMUNICATION COVERAGE – (TAL/RTLS)

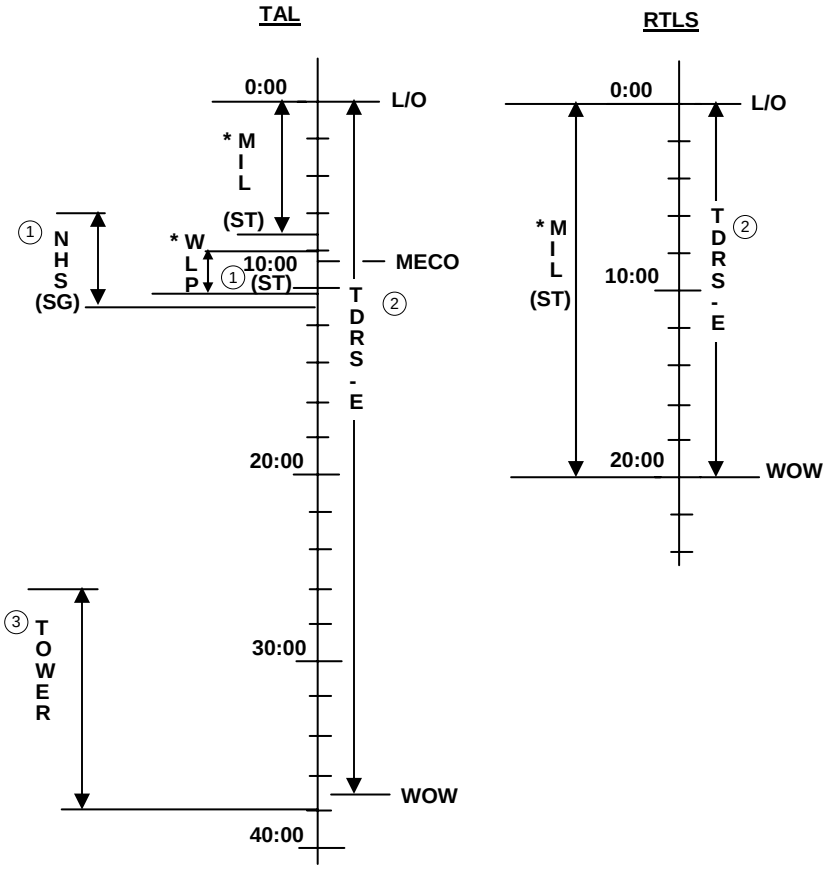

MODE

ST – STDN
SG – SGLS

*UHF available

NOTE:

① NHS/WLP coverage only on high inclinations

② ET blocks coverage until vehicle upright

③ Tower UHF installed at all TAL sites

COMM COVER

COMMUNICATION COVERAGE – (AOA to KSC)

LAND SITE

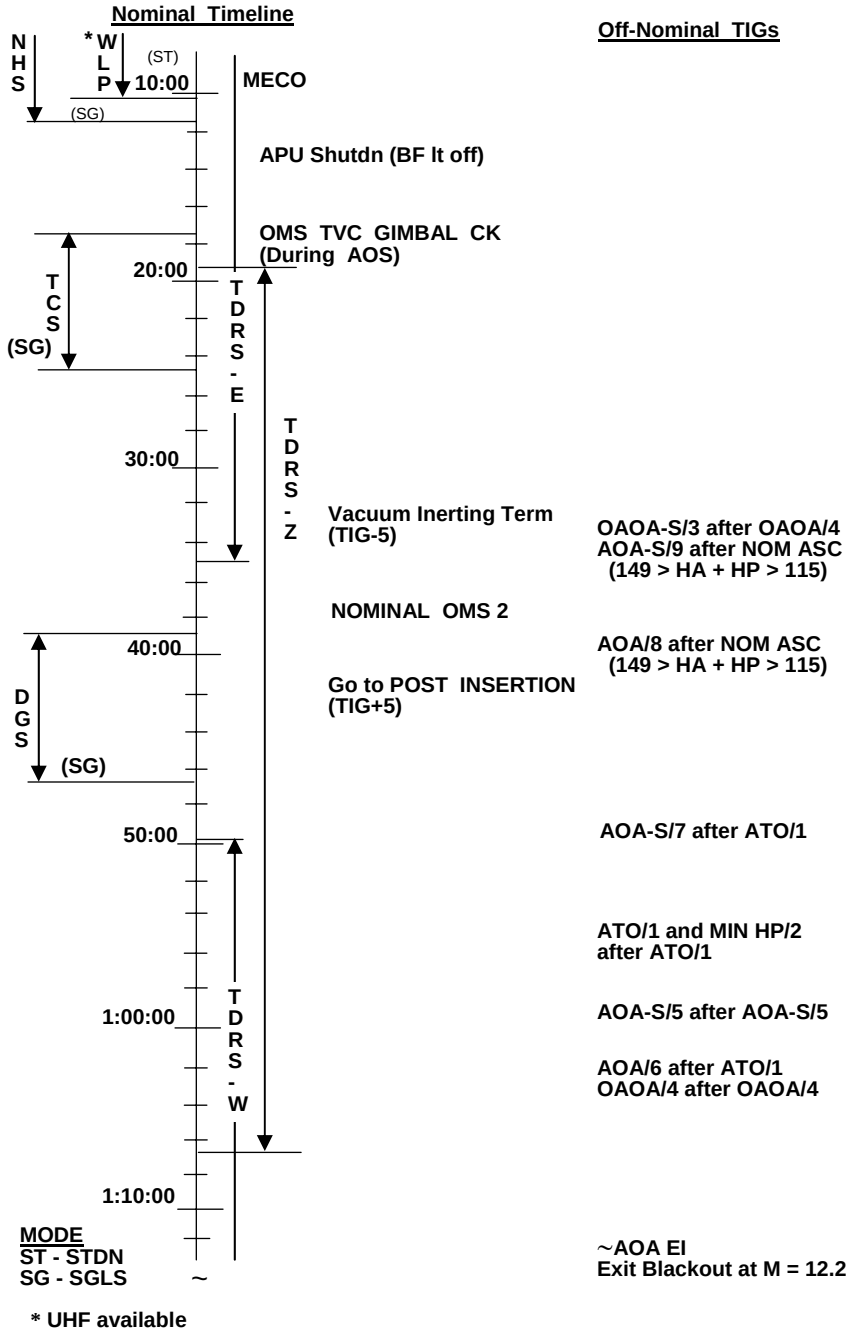

LAND SITE

STS-122 LANDING SITE TABLE
(50° to 63.5° INCLINATION)

SITE	LOCATION	RWY	TACANS		MLS CH	LG	+ OVR RUN
				ITEM 5			
1	KSC	KSC 15 KSC 33	TTS 59Y	COF 97	8 6	15000 15000	1000 1000
2	BEN GUERIR	BEN 36 BEN 18	MAK 80 ■	CBA 116 ■	- -	13720 13220	0 1000
3	MORON AB	MRN 20 MRN 02	MRN 100	AOG 23	◆6 -	11730 11730	1000 1000
4	ZARAGOZA	ZZA 30L ZZA 12R	ZZA 64	ZAR 77 ■	◆6 -	12200 12200	1000 1010
5	MYRTLE BEACH	MYR 36 MYR 18	ILM 117	FLO 99	- -	9500 9500	1000 1000
6	WILMINGTON	ILM 06 ILM 24	ILM 117	DIW 107 ■	- -	7500 7500	0 0
7	CHERRY POINT	NKT 32L NKT 23R	EWN 83 ■	NCA 101	- -	7110 7100	800 880
8	OCEANA NAS	NTU 32R NTU 23L	NGU 48	ORF 116	- -	7500 11500	0 0
9	WALLOPS	WAL 28 WAL 04	SBY 49	SWL 71	- -	7510 8750	0 0
10	DOVER AFB	DOV 32 DOV 19	SIE 95	CYN 81	- -	12400 9100	0 0
11	ATLANTIC CITY	ACY 31 ACY 13	CYN 81	SIE 95	- -	9500 9500	0 0
12	BEN GUERIR	BEN 36 BEN 18	MAK 80 ■	CBA 116 ■	- -	13720 13220	0 1000
13	*MORON AB	MRN 20 MRN 02	MRN 100	AOG 23	◆6 -	11730 11730	1000 1000
14	*ZARAGOZA	ZZA 30L ZZA 12R	ZZA 64	ZAR 77 ■	◆6 -	12200 12200	1000 1010
15	GABRESKI	FOK 06 FOK 24	HTO 83	GON 45Y■	- -	8500 8500	1000 1000

◆ Available for TAL Only
* LO XRNG TAL Site
■ DME
Length after displaced threshold

STS-122 LANDING SITE TABLE
(50° to 63.5° INCLINATION)

SITE	LOCATION	RWY	TACANS		MLS CH	LG	+ OVR RUN
				ITEM 5			
16	OTIS ANGB	FMH 32 FMH 23	BOS 74	PVD 103	- -	9000 7500	0 0
17	PEASE INT'L	PSM 34 PSM 16	ENE 118	BOS 74	- -	10020 10020	0 0
18	HALIFAX INT'L	YHZ 23 YHZ 32	UAW 38	YHZ 98 ■	- -	8800 7700	0 0
19	STEPHENVILLE	YJT 09 YJT 27	YJT 78	YDF 80 ■	- -	9500 9500	0 0
20	ST JOHNS INT'L	YYT 29 YYT 11	UYT 23	YYT 82 ■	- -	8500 8500	0 0
21	GANDER INT'L	YQX 21 YQX 31	YQX 74	IQX 32 ■	- -	9700 8900	0 0
22	GOOSE BAY	YYR 26 YYR 34	UYR 40	YYR 120 ■	- -	10550 9080	0 0
23	LAJES	LAJ 15 LAJ 33	TRM 109	LAJ 45	- -	10870 10870	970 990
24	BEJA	BEJ 01L BEJ 19R	MOJ 37	BEJ 105	- -	10820 10820	0 900
25	KEFLAVIK	IKF 20 IKF 29	KEF 57	HL 44 ■	- -	9520 9560	0 0
26	SHANNON	INN 06 INN 24	SHA 80 ■	CRK 93 ■	- -	9540 9540	0 0
27	FAIRFORD	FFA 27 FFA 09	FFA 81	BZN 56	- -	9490 9490	990 970
28	KOLN-BONN	KBO 14L KBO 32R	GIX 18	DOR 23Y ■	- -	12020 12020	0 0
29	ISTRES AB	FMI 33 FMI 15	◆FMI 16	NIM 53	◆6 -	11300 12300	3960 0
30	ESENBOGA	ESN 03R ESN 21L	BAG 78 ■	BUK 90 ■	- -	11800 11800	0 0

◆ Available for TAL Only

■ DME

Length after displaced threshold

STS-122 LANDING SITE TABLE
(50° to 63.5° INCLINATION)

SITE	LOCATION	RWY	TACANS		MLS CH	LG	+ OVR RUN
				ITEM 5			
31	KING KHALID	KKI 15R KKI 33L	RIY 92	KIA 80	- -	13300 13300	0 0
32	DIEGO GARCIA	JDG 31 JDG 13	NKW 57	NKW 57	- -	12000 12000	950 950
33	AMBERLEY TINDAL RAAF	AMB 15 PTN 14	AMB 94 -	- TDL 70	- -	9500 8500	0 0
34	YOKOTA AB	JTY 36 JTY 18	SHT 19	NJA 98	- -	11000 11000	1000 1000
35	ANDERSEN AFB	GUA 06L GUA 24R	UAM 54	UNZ 105	- -	10560 10560	1050 1000
36	WAKE ISLAND	WAK 28 WAK 10	AWK 82	AWK 82	- -	9360 9360	0 0
37	HONOLULU	HNL 08R HNL 26L	HNL 95	NGF 93	- -	11500 11500	0 0
38	ELMENDORF	EDF 24 EDF 06	EDF 81	BGQ 72	- -	9500 9500	0 0
39	HAO ATOLL	HAO 12 HAO 30	HAO 85 ■	HAO 85 ■	- -	10390 10390	0 0
40	EDW TEMP	●EDT 22R ●EDT 04L	EDW 111	LHS 21	8 6	12000 12000	1000 1000
41	ASCENSION	HAW 13 HAW 31	ASI 59	ASI 59	- -	9520 9520	0 0
42	NORTHRUP	NOR 17 NOR 23	SNG 121Y	HMN 92	6 6	15000 15000	Lkbd Lkbd
43	NORTHRUP	NOR 05 NOR 35	SNG 121Y	HMN 92	- -	15000 15000	Lkbd Lkbd
44	EDWARDS AFB	EDW 15 EDW 18L	EDW 111	LHS 21	- -	16300 15000	Lkbd Lkbd
45	EDWARDS AFB	EDW 22 EDW 04	EDW 111	LHS 21	8/† 6	15010 14010	0 1800

† MSBLS Jr. Ch 8 - Requires Uplink
● RWY ID EDW change to EDT via uplink
■ DME
Length after displaced threshold

WEATHER PADS

This Page Intentionally Blank

CONUS TERMINAL FORECASTS RTLS - ORB

↓ RTLS ACL pg 1-10

DEORB ORBIT	SITE	LDG GMT	SKY	VIS/WX	T/TD (°F)	WIND (MAG)	ALTM	DA	REMARKS
RTLS									
AOA (1)									
AOA (2)									

UPPER WINDS FORECAST (SFC=MAG, OTHER LEVELS=TRUE)

FIRST DAY PLS

ALT	RTLS	AOA (1)	AOA (2)	AOA (3)	ORB: _____ DEORB: _____
50K	/	/	/	/	/
38K	/	/	/	/	/
28K	/	/	/	/	/
20K	/	/	/	/	/
12K	/	/	/	/	/
7K	/	/	/	/	/
3K	/	/	/	/	/
1K	/	/	/	/	/
SFC	/	/	/	/	/

TAL ( ) data to ACL FB 2-14

TAL/CONUS TERMINAL FORECASTS

DEORB ORBIT	SITE	LDG GMT	SKY	VIS/WX	T/TD (°F)	WIND (MAG)	ALTM	DA	REMARKS
TAL (1)									
TAL (2)									
TAL (3)									

UPPER WINDS FORECAST (SFC=MAG, OTHER LEVELS=TRUE)

ALT	TAL (1)	TAL (2)	TAL (3)			
50K	/	/	/			
38K	/	/	/			
28K	/	/	/			
20K	/	/	/			
12K	/	/	/			
7K	/	/	/			
3K	/	/	/			
1K	/	/	/			
SFC	/	/	/			

ELS TERMINAL FORECASTS (Site Generated)

	SITE	ID	LDG GMT	SKY	VIS/WX	WIND (TRUE)	ALTM	REMARKS

ELS TERMINAL FORECASTS (Site Generated) (Cont)

	SITE	ID	LDG GMT	SKY	VIS/WX	WIND (TRUE)	ALTM	REMARKS

BLOCK 1 TRAJECTORY MESSAGE

DEORB ORB	APPROX TIG	SITE/RWY	OOP TIG WINDOW	
			OPEN	CLOSE
_____	_____	_____	_____	_____
_____	_____	_____	_____	_____
_____	_____	_____	_____	_____
_____	_____	_____	_____	_____
_____	_____	_____	_____	_____
_____	_____	_____	_____	_____

MAX RATES (1st STAGE)

NOTE: IGNORE ATTITUDE ERRORS DURING LOAD RELIEF

ROLL _____°/sec at _____

PITCH _____°/sec at _____

YAW _____°/sec

TRAJECTORY LOFTING (2nd STAGE)

LOFTED/DEPRESSED _____ K ft at VI _____ K fps

MISCELLANEOUS

NOTAMS: _____

_____

_____

_____

This Page Intentionally Blank

SWITCH LIST FOR HANDOVER INGRESS

FWD

L5 9-3
L side OVHD
Flood 9-3
L4 9-3
L1 9-3
L2 9-3
S1 9-4

F1 9-4
F2 9-4
F6U(HUD) 9-4
F3 9-4
F8U(HUD) 9-4
F4 9-4
F6 9-4
F7 9-5
F8 9-5
F9 9-5

R1 9-5
R2 9-5
R4 9-6
R6 9-6
R side OVHD
Flood 9-6

C2 9-6
C3 9-6
C5 9-7
S2 9-7
C6 9-7
C7 9-7

O1 9-7
O2 9-7
O3 9-7
O5 9-7
O6 9-7
O7 9-8
O8 9-8
O9 9-8
O13 9-9
O14 9-9
O15 9-9
O16 9-9
O17 9-10
O19 9-10

MIDDECK

ML86B 9-11
ML85E 9-13
SORG 9-13
MO13Q 9-13
ML31C 9-13
ML26C 9-13
ML18F 9-13
ML30N 9-13
MA73C 9-13
MO10W 9-14
WCS 9-14
MO30F 9-14
MO32M 9-14
MO39M 9-14
MO42F 9-14
MO51F 9-15
MO58F 9-15
MO52J 9-15
MO69M 9-15
MD44F 9-15
MIDDECK FLOOR ... 9-15
MO63P 9-15

MIDDECK EXPERIMENTS

MIDDECK (TEPC).. 9-16

AIRLOCK

AW18A 9-17
AW18D 9-17
AW18H 9-17
AW82B 9-17
AW82D 9-17
AW82H 9-17
TW58T 9-17
A/L IN HATCH 9-17
A/L OUT HATCH 9-17
SH HATCH 9-17
EXT A/L UPPER
HATCH 9-17
TNL ADP HATCH 9-17

AFT

R12L 9-18
R11U 9-18
R11L 9-18
R10 9-18
R13U 9-18
R13L 9-19

A1U 9-19
A1L 9-19
A1R 9-20
AFT MDU 9-20
A6U 9-20
A6L 9-20
A2 9-21
A7U 9-21
A7L 9-21
A4 9-21
A8U 9-22
A8L 9-22
A3 9-22

L9 9-23
L10L 9-23
L10U 9-24
L11U 9-24
L12UL 9-24
L12UR 9-24
L12LL 9-24
L12LR 9-24
L12L 9-24
R12 9-24

A15 9-25
A14 9-25
A13 9-25
A12 9-25
A11 9-26

R14 9-26

HARDWARE
C/W 9-27
MEDS CONFIG
FOR INGRESS 9-28

NOTES

- HANDOVER from LCC occurs at SRB Ignition (LCC to MCC Handover)
- INGRESS denotes switch status prior to beginning of PRE-INGRESS SW RECONFIGURATION (at T-3:00 (hold)) if different than HANDOVER
- - - - - - denotes physical break in panel structure
- Radiator flow valve, indicated by *, is in full radiator flow position and unpowered to allow maximum radiator flow capability if required
- Radiator isolation valve, indicated by ****, is configured in radiator flow and unpowered
- Talkbacks on panels L2, R11, R13, A6, and ML31C indicated by ** are bp because cbs on ML86B, A6, and O16 open. Position of valves indicated below:

L2:	O2 EMER	– CL
R11L:	SPLY H2O DUMP ISOL VLV	– CL
	VLV	– CL
	GALLEY SPLY VLV	– CL
R13L:	MMU GN2 SPLY ISOL VLV A	– CL
	B	– CL
A6L:	VEST DEP VLV SYS 1 VENT ISOL	– CL
	VENT	– CL
	2 VENT ISOL	– CL
	VENT	– CL
ML31C:	WASTE H2O DUMP ISOL VLV	– CL
	VLV	– CL
	VAC VENT ISOL VLV CNTL	– CL

- Before turning OI PCMMU PWR switch on C3, indicated by ***, to OFF, notify LCC so gnd power can be connected; also notify LCC before turning it to 1 after crew ingress
- All unspecified/unlabeled switches – dn (2 position)/ctr (3 position), tb – bp, cb – op, rotaries – full counter clockwise
- PL RETEN PL SEL switch on panel A6U will nominally be 1 for deployable payload missions using only a single PL SEL position but will be MON until PRE-INGRESS SW CONFIG. All other missions will be in MON (Flt Rule A10-281)
- Circuit Breaker snapring color codes:
  {R} – Red – open all times
  {G} – Green – open on orbit only
  {Y} – Yellow – open ascent, closed per procedure
  {O} – Orange – open orbit thru entry
  { } – Blank (no ring) – always closed or as required
- STS-122 options affecting switch list:
  1) OV104
  2) GMTLO
  3) Orbit incln = 51.6°
  4) Payload: ISS-E (Columbus Module), ICC-L, ECSH, PDGF, Middeck Experiments
  5) Crew size of 7 up, 7 down
  6) Installed: TK CRYO sets (5), SORG, Ku Ant, GN2 (5), External Airlock (ISS), RMS, OBSS, OIU, VPU, WVS, DTV
  7) Options N/R: RCRS
- Changes are with respect to STS-118 Switch List as published in FIN

FWD FLIGHT DECK SWITCH LIST FOR HANDOVER INGRESS

L5	L COMM PWR – ON OFF	

L side OVHD Flood – BRT

L4:	All cbs – cl { } except:	
:B	All cbs – op { Y }	
:D	All cbs – cl { O }	
:E	All cbs – cl { O }	
:F	cb AC1 H2O LOOP PUMP 1 A/2 (three)	– op { R } cl
:J	AC3 SIG CONDR (two)	– op { Y }
:P	blank cbs (three)	– op { R }
:Q	cb AC1 ΦC LTG INST OS	– op { Y }
	AC2 ΦC LTG NUMERIC OS	– op { Y }
	AC3 LTG (three)	– op { Y }

L1	HUM SEP A	– OFF
	B	– ON
	CAB TEMP sel	– COOL
	CNTLR	– OFF
	FAN A	– ON
	B	– OFF
	IMU FAN A,C (two)	– OFF
	B	– ON
	H2O PUMP LOOP 1 (two)	– OFF,B
	2	– ON
	LOOP BYP MAN (two)	– ctr
	MODE (two)	– MAN

L1	AV BAY 1,3 FAN A (two)	– OFF
	B (two)	– ON
	2 FAN A	– ON
	B	– OFF
	FLOW PROP VLV LOOP (two)	– ctr (tb-ICH)
	FREON PUMP LOOP (two)	– B
	RAD CNTLR OUT TEMP	– NORM
	LOOP (two)	– OFF*
	BYP VLV MAN SEL (two)	– ctr (tb-BYP)
	MODE (two)	– MAN
	NH3 CNTLR A	– OFF
	B	– PRI/GPC
	H2O ALT PRESS	– CL
	FLASH EVAP CNTLR PRI A	– GPC
	B	– OFF
	SEC (two)	– A SPLY,OFF
	HI LOAD EVAP	– ENA
	TOP EVAP HTR NOZ (two)	– A AUTO
	DUCT sel	– A
	HI LOAD DUCT HTR sel	– A
	FIRE SUPPR AV BAY (three)	– SAFE
	pb (three)	– lt off
	SMOKE DETN lts (ten)	– off
	SNSR	– dn
	CKT TEST	– OFF

L2	CAB RELIEF (two)	– ctr (tb-ENA)
	VENT (two)	– ctr (tb-CL)

FWD FLIGHT DECK SWITCH LIST FOR HANDOVER INGRESS

L2	FLASH EVAP FDLN HTR SPLY (two)	– OFF 2
	ANTISKID	– ON
	NWS	– 1
	BDY FLP	– AUTO/OFF
	ENTRY MODE	– AUTO
	TRIM R,P,Y (three)	– ctr
	FREON ISOL MODE	– OFF
	LOOP 1,2 (two)	– ctr ****
	SBTC	– full forward
	ATM PRESS CONTROL	
	O2 SYS SPLY (two)	– ctr (tb-OP)
	EMER	– ctr (tb-bp)**
	XOVR SYS (two)	– OP
	N2 SYS (four)	– ctr (tb-OP)
	O2/N2 CNTLR VLV SYS 1	– OP
	2	– CL
	PPO2 SNSR/VLV	– NORM
S1	CDR SEAT PWR BUS SEL	– AC2 (up)
	CONTR (two)	– ctr
F1	DC UTIL PWR MNB	– OFF
	AC UTIL PWR AC1	– OFF
F2	All pb lts off except:	
	BDY FLP pb	– AUTO lt off
	SPDBK/THROT pb	– AUTO lt off
	PITCH pb	– AUTO lt off
	ROLL/YAW pb	– AUTO lt off
F6U	L HUD MODE	– NORM
	DIM BRT sel	– mid range
	HUD BRT	– as reqd
F3	L HUD PWR	– OFF
	TRIM RHC/PNL	– INH
	PNL	– ON
	NWS FAIL lt	– off
	ANTISKID FAIL lt	– off
	R TRIM RHC/PNL	– INH
	PNL	– ON
	HUD PWR	– OFF
	DRAG CHUTE pb (six)	– lt off
F8U	R HUD MODE	– NORM
	DIM BRT sel	– mid range
	HUD BRT	– as reqd
F4	All pb lts off except:	
	BDY FLP pb	– AUTO lt off
	SPDBK/THROT pb	– AUTO lt off
	PITCH pb	– AUTO lt off
	ROLL/YAW pb	– AUTO lt off
F6	BFC	– right
	HUD DATA BUS	– 1
	MDU PWR (two)	– ON
	BRT sel (two)	– as reqd
	LDG GEAR pb (two)	– lt off
	tb (three)	– UP
	HSI SEL MODE	– ENTRY
	SOURCE (two)	– NAV,1
	RDR ALTM	– 1
	FLT CNTLR PWR	– ON
	ADI ATT	– REF
	ERR	– MED
	RATE	– MED

FWD FLIGHT DECK SWITCH LIST FOR HANDOVER INGRESS

F6	ABORT MODE	– OFF
	pb	– lt off
	RCS CMD lts (three)	– off
	RANGE SAFE ARM lt	– off
	AIR DATA	– NAV
F7	MDU PWR (five)	– ON
	BRT sel (five)	– as reqd
	MN ENG STAT lts (six)	– off
	SM ALERT lt	– off
	C/W matrix lts	– off all off except HYD PRESS
F8	HUD DATA BUS	– 4
	MDU PWR (two)	– ON
	BRT sel (two)	– as reqd
	LDG GEAR pb (two)	– lt off
	tb (three)	– UP
	HSI SEL MODE	– ENTRY
	SOURCE (two)	– NAV,2
	FLT CNTLR PWR	– ON
	RAD ALTM	– 2
	ADI ATT	– REF
	ERR	– MED
	RATE	– MED
	AIR DATA	– NAV
F9	AC Volts sel	– as reqd
	DC Volt/Amp sel	– VOLTS MNB
R1	CNTL BUS PWR (three)	– dn
	ESS BUS SOURCE MN (three)	– ON
	FC (three)	– ON OFF
	FC/MN BUS (three)	– ctr (tb-ON)
	MN BUS TIE (three)	– ctr (tb-OFF)
	PL CAB	– OFF
	PRI MNC	– ctr (tb-OFF)
R1	PL PRI MNB,FC3 (two)	– ctr (tb-OFF)
	AUX	– OFF
	AFT MNB	– OFF
	MNC	– OFF
	INV PWR (three)	– ctr (tb-ON)
	INV/AC BUS (three)	– ctr (tb-ON)
	cb AC CONTR (nine)	– op { }
	AC BUS SNSR (three)	– MON
R1	(CRYO)	
	O2 MANF VLV (two)	– ctr (tb-OP)
	TK1,2 HTRS A (two)	– AUTO
	B (two)	– OFF
	RESET/TEST (two)	– ctr
	TK3 HTRS (two)	– OFF
	RESET/TEST	– ctr
	FC REAC (three)	– ctr
	tb (six)	– OP
	(three)	– ctr
	RDY tb (three)	– gray
	COOL PUMP ΔP tb (three)	– gray
	H2 MANF VLV (two)	– ctr (tb-OP)
	TK1,2 HTRS A (two)	– AUTO
	B (two)	– OFF
	TK3 HTRS (two)	– OFF
R2	MPS PRPLT DUMP (two)	– GPC
	ENG PWR (six)	– ON
	He ISOL (six)	– OP GPC
	PNEU L ENG He XOVR	– GPC
	He ISOL	– OP GPC
	LH2 ULL PRESS	– AUTO
	He I'CNCT (three)	– GPC

FWD FLIGHT DECK SWITCH LIST FOR HANDOVER INGRESS

R2	APU/HYD RDY tb (three)	– bp
	APU OPER (three)	– START/RUN OFF
	SPEED SEL (three)	– NORM
	HYD MN PUMP PRESS (three)	– NORM
	cb APU FU TK VLV ENA (six)	– cl { } op
	HYD CIRC PUMP (three)	– OFF GPC
	APU CNTLR PWR (three)	– ON OFF
	FU TK VLV (three)	– OP CL
	AUTO SHTDN (three)	– ENA
	BLR CNTLR/HTR (three)	– A
	PWR (three)	– ON
	N2 SPLY (three)	– ON OFF
	ET UMB DR MODE	– GPC
	CTRLN LAT	– GND (tb-bp)
	L,R DR (two)	– OFF (tb-OP)
	LAT (two)	– OFF (tb-REL)
R4	HYD BK HTR (three)	– OFF
	ISOL VLV (three)	– GPC (tb-CL)
	MPS/TVC ISOL VLV SYS (three)	– GPC (tb-OP)
	LG/NWS HYD SYS	– AUTO 1/2
	LG EXTD ISOL VLV	– GPC (tb-CL)
	MPS ENG CNTLR HTR (three)	– OFF
	MANF PRESS (two)	– GPC
	FILL/DRAIN (four)	– GND
	H2 PRESS LINE VENT	– GND
	LO2 PREVLV (three)	– GPC
	LH2 PREVLV (three)	– GPC
	FDLN RLF ISOL (two)	– GPC
R6	R COMM PWR – ON OFF	
R side OVHD Flood – BRT		

C2	IDP/CRT PWR (three)	– ON
	MAJ FUNC (three)	– GNC
	SEL (two)	– as reqd
	EVENT TIMER MODE	– DN
	CNTL	– ctr
	TIMER SET pb (four)	– 0900
	TIMER	– ctr
C3	OMS ENG (two)	– ARM/PRESS OFF
	BFC CRT DISP	– ON OFF
	SEL	– 3+1
	FCS CH (four)	– AUTO
	BDY FLP	– AUTO/OFF
	AIR DATA PROBE STO (two)	– INH
	MN ENG LIMIT SHUTDN	– AUTO
	TRIM R,P,Y (three)	– ctr
	SBTC	– full forward
	DAP	– all off
	SRB SEP	– AUTO
	ET SEP	– AUTO
	AUD CTR	– 1
	OI PCMMU PWR	– 1 OFF ***
	FORMAT	– GPC
	S-BD PM CNTL	– CMD
	ANT sel	– GPC
	AIR DATA PROBE (two)	– STOW
	FC REAC VLV (three)	– dn
	cb FC REAC VLV CL ENA (three)	– op { R }
	UPLK	– ENA
	MSTR MADS PWR	– ON
	C/W MEM	– ctr
	MODE	– NORM

FWD FLIGHT DECK SWITCH LIST FOR HANDOVER INGRESS

C3	RTG PUMP (OV103,4 – no SH)	– PRI
	SHORT ENA (two) (OV104 – no SH)	– DSBL
	SHORT (two) (OV104 – no SH)	– OFF
	PL SAFING (four) (OV103 – no SH)	– SAFE
	(five) (OV105 – no SH)	– SAFE
	SH FIRE SUPPR ARM (two) (SH only)	– SAFE
	DISCH (two) (SH only)	– NO-OP
	H2O LN HTRS (SH only)	– OFF
	EMER LTG	– OFF/ON
C5	DIRECT O2 vlv – CL	
S2	PL SEAT PWR BUS SEL	– AC3 (dn)
	CONTR (two)	– ctr
C6	LEH O2 vlv (four) – OP	
C7	LEH O2 SPLY vlv (two) – OP	
O1	COAS	– OFF
	AIR TEMP sel	– CAB HX OUT
	H2O PUMP OUT PRESS sel	– LOOP 2
	FREON sel	– LOOP 1
	O2/N2 FLOW sel	– SYS 1 O2
	PPO2 sel	– SNSR A
O2	CRYO O2 HTR ASSY TEMP sel	– TK1 1
	O2/H2 sel	– TK1
	FC STACK TEMP sel	– 1
O3	RCS/OMS PRESS sel	– RCS He X 10
	PRPLT QTY sel	– OMS FUEL
	MSN TIME	– MET
O5	L AUD TACAN ID (two) (OV103,4)	– OFF,1
	VOX SENS sel	– as reqd
	A/G (two)	– T/R
	A/A	– T/R
	ICOM (two)	– T/R
	PWR	– AUD/TONE
	CNTL sel	– NORM
	XMIT/ICOM MODE sel	– as reqd (PTT/VOX recommended)
	VOL pb (five)	– as reqd
	TACAN pb	– 5
	PAGE	– dn
O6	LTG PNL sel (two)	– OFF
		– (1/4 brt if night launch)
	INST L/CTR sel	– OFF
		– (1/4 brt if night launch)
	OVHD sel	– as reqd
		– (1/4 brt if night launch)
	L GLRSHLD FLOOD sel (two)	– VAR, as reqd
	L SEAT/CTR CNSL FLOOD sel (two)	– OFF,BRT
	S TRK DR CNTL (two)	– OFF
	POS tb (two)	– CL
	PWR (two)	– OFF
	UHF SPLX/EVA XMIT FREQ	– 259.7/414.2
	PWR AMP	– ON
	SPLX SQUELCH	– ON
	EVA STRING	– 1
	ENCRYPT	– ON
	MODE	– SPLX

FWD FLIGHT DECK SWITCH LIST FOR HANDOVER INGRESS

O6	ANNUN LAMP TEST	– ctr
	BUS SEL ACA 1	– MNA
	2/3	– MNB
	INTEN sel (two)	– BRT,MED
	MTU	– AUTO
	INT DISP PROC (four)	– dn
	MDM PL1,2 (two)	– ON
	PL3	– OFF
	FA (four)	– ON
	FF (four)	– ON
	GPC PWR (five)	– ON
	OUTPUT 1,2,3,4 (four)	– NORM (tb-gray)
	5	– B/U NORM (tb-bp)
	IPL SOURCE	– OFF
	GPC MODE 1,2,3,4 (four)	– RUN (tb-RUN)
	5	– RUN STBY (tb-RUN)

O7	TACAN MODE sel (three) (OV103,4)	– GPC	OFF
	ANT SEL (three) (OV103,4)	– AUTO	as is
	CH pb/tw (three) (OV103,4)	– 059Y	as is
	GPS PRE AMPL UPPER (three) (OV105)	– ON	OFF
	LOWER (three) (OV105)	– ON	OFF
	PWR (three) (OV105)	– ON	OFF
	ENCRYPT (three) (OV105)	– NORM	as is
	AFT L RCS He PRESS (two)	– OP (tb-OP)	
	TK ISOL (three)	– GPC (tb-OP)	
	MANF ISOL (five)	– GPC (tb-OP)	
	XFEED (two)	– GPC (tb-CL)	
	MSTR RCS XFEED	– OFF	
	AFT R RCS He PRESS (two)	– OP (tb-OP)	
	TK ISOL (three)	– GPC (tb-OP)	
	MANF ISOL (five)	– GPC (tb-OP)	
	XFEED (two)	– GPC (tb-CL)	

O8	RADAR ALTM (two)	– ON OFF
	MLS (three)	– OFF
	MLS CH pb/tw (three)	– 6
	R SEAT/CTR CNSL FLOOD sel (two)	– OFF,BRT
	LTG PNL R sel (three)	– OFF
		– (1/4 brt if night launch)
	NUMERIC sel	– BRT
		– (1/4 brt if night launch)
	R GLRSHLD FLOOD sel (two)	– VAR, as reqd
	OMS KIT He PRESS/VAP ISOL (two)	– CL
	TK ISOL (two)	– CL (tb-bp)
	L OMS He PRESS/VAP ISOL (two)	– GPC
	TK ISOL (two)	– GPC (tb-OP)
	XFEED A	– GPC (tb-CL)
	B	– GPC (tb-CL) (tb-OP)
	R OMS He PRESS/VAP ISOL (two)	– GPC
	TK ISOL (two)	– GPC (tb-OP)
	XFEED (two)	– GPC (tb-CL)
	FWD RCS He PRESS (two)	– OP (tb-OP)
	TK ISOL (two)	– GPC (tb-OP)
	MANF ISOL (five)	– GPC (tb-OP)
	ANNUN LAMP TEST	– ctr

O9	R AUD PWR	– AUD/TONE
	A/G (two)	– T/R
	A/A	– T/R
	ICOM (two)	– T/R
	VOX SENS sel	– as reqd
	TACAN ID (two) (OV103,4)	– OFF, as reqd

FWD FLIGHT DECK SWITCH LIST FOR HANDOVER INGRESS

```
O9        R AUD PAGE                    – dn
                VOL pb (five)           – as reqd
                     TACAN pb           – 5
                XMIT/ICOM MODE sel      – as reqd (PTT/VOX
                                          recommended)
                CNTL sel                – NORM
```

```
O13:      All cbs – cl {   } except:
   :A,C,E cb ESS MN CONTR (three) – cl {   } [op]
```

```
O14:A     BRAKES MNA – ON
          RGA 1          – ON
          IMU 1          – ON
          FC1 CNTLR      – ON
   :B,C,D,E  All cbs – cl {   } except:
   :B     cb MNA MNC CONTR – cl   {   } [op]
   :D             GPS PRE AMPL UC (OV103)     – op {R}
                                LC (OV103)     – op {R}
                     1 PRE AMPL (two)(OV104) – op {R}
                  CAB VENT        – cl   {O}
                           ISOL – cl   {O}
   :E             ADTA 1          – cl   {G}
                  ACCEL 1         – cl   {G}
                  DDU AFT         – op {Y}
   :F     MMU 1                   – ON
          RJDA 1A L2/R2 LOGIC     – ON
                       DRIVER     – ON [OFF]
                 2A L4/R4 LOGIC   – ON
                       DRIVER     – ON [OFF]
          RJDF 1B F1 LOGIC        – ON
                     DRIVER       – ON [OFF]
```

```
O14:F     L OMS ENG VLV – ON [OFF]
          ASA 1         – ON
```

```
O15:A     BRAKES MNB – ON
          RGA (two)  – ON
          IMU 2      – ON
          FC2 CNTLR  – ON
   :B,C,D,E  All cbs – cl {   } except:
   :B     cb MNB MNA CONTR – cl {   } [op]
   :C             UTIL PWR F1/MO13Q – op {Y}
   :E             ADTA 2            – cl   {G}
                  ACCEL 2           – cl   {G}
                  DDU R             – cl   {G}
   :F     MMU 2                     – ON
          RJDA 1B L1/L5/R1 LOGIC    – ON
                   L1/R1 DRIVER     – ON [OFF]
          RJDF 1A F2 LOGIC          – ON
                     DRIVER         – ON [OFF]
          ASA 2                     – ON
          ACCEL 4                   – ON
```

```
O16:A     BRAKES MNC – ON
          RGA 3      – ON
          IMU 3      – ON
          FC3 CNTLR  – ON
   :B,C,D,E  All cbs – cl {   } except:
   :B     cb MNC MNB CONTR                – cl   {   } [op]
   :D             GPS PRE AMPL UC (OV103)     – cl   {   }
                                LC (OV103)     – cl   {   }
                     3 PRE AMPL (two)(OV104) – op {R}
                  O2 EMER                    – op {R}
```

FWD FLIGHT DECK SWITCH LIST FOR HANDOVER INGRESS

O16:E	cb MNC ADTA 3,4 (two)	– cl	{G}
	DDU R	– cl	{G}
	AFT	– op	{Y}
:F	RJDA 2B L3/R3/R5 LOGIC	– ON	
	L3/R3 DRIVER	– ON	OFF
	RJDF 2A F3 LOGIC	– ON	
	DRIVER	– ON	OFF
	RJDF 2B F4/F5 LOGIC	– ON	
	F4 DRIVER	– ON	OFF
	R OMS ENG VLV	– ON	OFF
	ASA 3,4 (two)	– ON	
	ACCEL 3	– ON	
	RJD MANF L5/F5/R5/DRIVER	– OFF	

O17:A	ATVC (four)	– ON
:B	EIU (three)	– ON
:C	SIG CONDR FREON A	– AC2
	B	– AC3
	OL 1/2	– ON
	OR 1/2	– ON
:D	SIG CONDR OA 1/2/3	– ON
	MDM OA 1/2/3	– ON
	MEC (two)	– ON

O19	TV PWR	– ON	OFF
	DC UTIL PWR MNA	– ON	
	COAS PWR	– OFF	

MIDDECK SWITCH LIST FOR HANDOVER INGRESS

ML86B:A	cb	MNA	SPLY H2O TKA INLET	– cl { }
			TKB OUTLET	– cl { }
			WASTE H2O DUMP VLV/NOZ HTR	– op { Y }
			H2O LINE HTR A	– op { Y }
		MNB	SPLY H2O TKB INLET	– cl { }
			TKC OUTLET	– cl { }
			DUMP ISOL	– op { Y }
			B SPLY ISOL VLV	– cl { }
			H2O LINE HTR B	– op { Y }
		MNC	SPLY H2O TKA OUTLET	– cl { }
			TKC INLET	– cl { }
			DUMP VLV/NOZ HTR	– op { Y }
			XOVR VLV	– cl { }
			GALLEY SPLY	– op { Y }
:B	cb	MNA	WASTE H2O TK1 VLV	– cl { }
			SPLY H2O TKD OUTLET	– cl { }
			WASTE H2O DUMP ISOL	– op { Y }
			VAC VENT ISOL VLV	– op { Y }
			WCS CNTLR	– op { Y }
			GALLEY OVEN	– op { Y }
		MNB	WASTE H2O TK1 DRAIN	– cl { }
			SPLY H2O TKD INLET	– cl { }
			VAC VENT NOZ HTR	– op { Y }
			ISOL VLV	– op { Y }
			WCS CNTLR	– op { Y }
			GALLEY H2O HTR	– op { Y }
:C	cb	MNA	EXT ARLK HTR LINE ZN1	– op { Y }
			ZN2	– op { Y }
			STRUC	– op { Y }

ML86B:C	cb	MNA	EXT ARLK HTR VEST	– op { Y }
		MNB	EXT ARLK HTR LINE ZN1	– op { Y }
			ZN2	– op { Y }
			H2O S/O VLV	– cl { }
			STRUC	– op { Y }
			VEST	– op { Y }
		MNC	EXT ARLK HTR LINE ZN1	– op { Y }
			ZN2	– op { Y }
:D	cb	MNA	PYRO JETT SYS A KU ANT	– op { R }
			STBD RMS	– op { R }
			MMU GN2 SPLY ISOL VLV A	– op { Y }
			PORT HTR A	– op { R }
			STBD HTR A	– op { R }
		MNB	PYRO JETT SYS A PORT RMS	– op { R }
			MMU GN2 SPLY ISOL VLV B	– op { R }
			PORT HTR B	– op { R }
			STBD HTR B	– op { R }
		MNC	PYRO JETT SYS B KU ANT	– op { R }
			PORT RMS	– op { R }
			STBD RMS	– op { R }
:E	cb	MNA	EMU 2 H2O SPLY	– op { Y }
			WASTE	– op { Y }
			FC PCM	– cl { }
			CO2 SYS 1 CNTLR (OV104,5)	– op { R }
			FLOOD TNL ADAPT 2	– op { R }
				– (op { Y } if SH flown)

MIDDECK SWITCH LIST FOR HANDOVER INGRESS

```
ML86B:E   cb MNB MAR 1   – op { Y }
                     2   – cl { }
             SEAT L  – cl { }
                   R – cl { }
             CO2 COM INSTR (OV104,5) – op { R }
             FLOOD TNL ADAPT 3 – op { R }
                                 – (op { Y } if SH flown)
        MNC EMU 1 H2O SPLY     – op { Y }
                     WASTE     – op { Y }
             SEAT L            – cl { }
                   R           – cl { }
             CO2 SYS 2 CNTLR (OV104,5) – op { R }
             FLOOD TNL ADAPT 4 – op { R }
                                 – (op { Y } if SH flown)
     :F   cb MNA FLOODS MIDDECK 1/8 – cl { }
                 WMC/MO13Q – op { Y }
                 AIRLK 1   – op { Y }
                 MIDDECK 9 – op { Y }
             CRYO O2 HTR TK3 SNSR 1 – cl { }
                         TK5 SNSR 1 – cl { }
                                    – (op { R } if
                                       TK5 not flown)
        MNB FLOODS MIDDECK 2/6 – cl { }
                 BUNK 2/4  – op { Y }
                 MIDDECK 10 – op { Y }
                 AIRLK 3   – op { Y }
             CRYO O2 HTR TK3 SNSR 2 – cl { }
                         TK4 SNSR 1 – cl { }
                                    – (op { R } if
                                       TK4 not flown)
```

```
ML86B:F   cb MNC FLOODS MIDDECK 5/7          – cl { }
                            3/4/MO13Q – cl { }
                        BUNK 1/3              – op { Y }
                        AIRLK 4               – op { Y }
                 CRYO O2 HTR TK5 SNSR 2 – cl { }
                                        – (op { R } if
                                           TK5 not flown)
                            TK4 SNSR 2 – cl { }
                                        – (op { R } if
                                           TK4 not flown)
     :G   cb ESS 1BC FLOOD AIRLK 2          – op { Y }
                         TNL ADAPT 1        – op { R }
                                            – (op { Y } if
                                               SH flown)
                     CRYO CNTLR TK4 (two) – cl { }
                                            – (op { R } if
                                               TK4 not flown)
                         QTY TK4 (two)      – cl { }
                                            – (op { R } if
                                               TK4 not flown)
                 2CA CRYO CNTLR TK5 (two) – cl { }
                                            – (op { R } if
                                               TK5 not flown)
                         QTY TK5 (two)      – cl { }
                                            – (op { R } if
                                               TK5 not flown)
                 3AB CRYO CNTLR TK3 (two) – cl { }
                         QTY TK3 (two)      – cl { }
```

MIDDECK SWITCH LIST FOR HANDOVER INGRESS

ML85E	(MUP – if reqd)	
	AC S1	– OFF
	cb AC CB1	– op { Y }
	DC 10 AMP MNB S2	– OFF
	S3	– OFF
	S4	– ON
	S5	– OFF
	cb DC 10 AMP MNB CB2	– op { Y }
	CB3	– op { Y }
	CB4	– cl { }
	CB5	– op { Y }
	PUMPS S6	– OFF
	cb PUMPS (two)	– op { R }
SORG	(NOTE: Panel deleted if Galley not flown)	
	OVEN FAN	– OFF
	H2O HOT(COLD) pb (two)	– lt off
	VOL sel	– as reqd
	MV2	– as reqd
	REHYD STA Lever	– CL, latched
	OVEN/RHS	– OFF
	H2O HTR (two)	– OFF
	AUX PORT	– cap installed
	TEST PORT 4	– cap installed
	A5J105 ELECT TEST PORT	– cap installed
	OVEN DOOR	– CL
MO13Q	MIDDECK FLOODS 1,2,3,5,7 (five)	– OFF
	9,10 (two)	– OFF
	4,6,8 (three)	– ON
	MO13Q LTG	– OFF
MO13Q	AIRLK FAN (two)	– OFF
	H2O S/O VLV	– ctr (tb-OP)
	AIRLK 2	– OFF/ON
	TNL ADAPT 1	– OFF/ON
	DC UTIL PWR MNB	– OFF
	AC UTIL PWR AC3	– OFF
ML31C	WASTE H2O TK1 DRAIN VLV	– ctr (tb-OP)
	VLV	– ctr (tb-OP)
	DUMP ISOL VLV	– ctr (tb-bp)**
	VLV	– ctr (tb-bp)**
	VLV ENA/NOZ HTR	– OFF
	SPLY H2O TKD INLET	– ctr (tb-OP)
	OUTLET	– ctr (tb-OP)
	VAC VENT ISOL VLV BUS SEL	– MNA
	CNTL	– ctr (tb-bp)**
	NOZ HTR	– OFF
ML26C	SPLY H2O GN2 TKA SPLY vlv	– CL
	TK VENT vlv	– VENT
ML18F	EMER LTG	– ON/OFF
	WMC FLOOD	– OFF
ML30N	Neg Press Relief vlv cap (two)	– installed/seated
MA73C:A,B	MCA LOGIC MNA (four)	– ON
	MNB (six)	– ON
	MNC (four)	– ON
:C,D	All cbs – cl	{ }
:E	All cbs – op	{ Y }

MIDDECK SWITCH LIST FOR HANDOVER INGRESS

MA73C:F	cb AC1 RMS PRI ΦA – op	{ Y }
	– (op	{ R } if no RMS flown)
	MAR 3Φ – op	{ Y }
	OPS INST HYD ACTR ΦC – cl	{ }
	AC2 RMS B/U ΦA – op	{ Y }
	– (op	{ R } if no RMS flown)
	L SEAT 3Φ – cl	{ }
	OPS INST HYD ACTR ΦC – cl	{ }
	AC3 L SEAT 3Φ – cl	{ }
:G	cb ARLK TNL FAN (six) – op	{ R }
	– (op	{ Y } if SH flown or ISS docking mission)
	AC2 R SEAT 3Φ – cl	{ }
	AC3 GALLEY FAN (three) – op	{ Y }
	R SEAT 3Φ – cl	{ }
	blank switch – dn	
:H,I	All cbs – cl	{ }
:I	AFT POD VLV LOGIC (three) – ON	

MO10W	14.7 CAB REG INLET vlv (two)	– CL
	PPO2 CNTLR (two)	– NORM
	O2 REG INLET vlv (two)	– CL
	H2O TK N2 REG INLET vlv (two)	– OP
	PL N2 vlv (two)	– CL
	O2 EMER vlv	– CL
	N2 XOVR vlv	– CL
	H2O TK N2 ISOL vlv (two)	– OP
	PL O2 vlv (two)	– CL

WCS	AUTO INHIBIT/AUTO	– AUTO
	COMMODE CNTL	– DN/OFF
	MODE	– AUTO
	VAC VLV	– CL
	FAN BYP (two)	– OFF
	SEP	– OFF
	HOSE BLOCK	– SEP 1
	COMPACTOR ANGLE	– ~0 or < 10%
MO30F	DC UTIL PWR MNC – OFF	
MO32M	LEH O2 5 vlv – CL (OP if seat 5 flown)	
	6 vlv – CL (OP if seat 6 flown)	
MO39M	MIDDECK COMM CCU PWR – ON OFF	
MO42F	MIDDECK SPKR AUD PWR – AUD/TONE	
	A/G (two)	– T/R
	A/A	– T/R
	ICOM (two)	– T/R
	VOX SENS sel	– as reqd
	MSTR SPKR VOL sel	– as reqd
	PAGE	– dn
	VOL pb (five)	– as reqd
	XMIT/ICOM MODE sel	– as reqd (PTT/PTT recommended)
	TONES	– ACCU/BYP
	SPKR PWR	– OFF
	GPC MEM DUMP sel	– OFF
	BYP TONE VOL	– as reqd

MIDDECK SWITCH LIST FOR HANDOVER INGRESS

MO51F	(CO2 RMVL SYS (RCRS) – OV104,5) CNTLR lts (four) – off MNA – OFF AC1 – ctr CNTLR 1 MODE – ctr COM INSTR – OFF MNC – OFF AC3 – ctr CNTLR 2 MODE – ctr All cbs (six) (OV104,5) – op {R}
MO58F	TV PWR – OFF
MO52J	DC UTIL PWR MNA – OFF AC UTIL PWR AC1 – OFF MSTR ALARM pb – lt off
MO69M	LEH O2 7 vlv – CL (OP if seat 7 flown) 8 vlv – CL
MD44F	CAB TEMP CNTL LINK – PRI ACT (pinned) vlv – FULL COOL (**ccw** by using AUTO TEMP CNTLR 1) SEC ACT – FULL HEAT (**cw** by using AUTO TEMP CNTLR 2)

MIDDECK FLOOR	EMU O2 ISOL VLV – CL CAB PURGE VLV – CL ISOL VLV – CL
MO63P	cb CB2/J2 – op {Y} CB3/J3 – cl { } CB4/J4 – op {Y} CB5/J5 – op {Y} CB6/J6 – op {Y} RLY PWR – op {Y} J2 – OFF J3 – ON J4 – OFF J5 – OFF J6 – OFF Left select – 10A Right select – 10A

MIDDECK EXPERIMENTS SWITCH LIST FOR HANDOVER INGRESS

(IF FLOWN)
MIDDECK (TEPC)
SW-1 – OFF

AIRLOCK SWITCH LIST FOR HANDOVER INGRESS

AW18A	LTG FLOOD 1,3,4 (three) – OFF 2 – ON/OFF
AW18D	AIRLK AUD PWR – OFF A/G 1 – T/R A/G 2 – RCV A/A – T/R ICOM (two) – T/R PAGE – dn VOL pb (five) – as reqd CNTL – NORM VOX SENS sel – as reqd MSTR VOL 1 sel – MAX XMIT/ICOM MODE sel – PTT/VOX MSTR VOL 2 sel – MAX
AW18H	PWR/BATT CHGR EMU BUS SEL (two) – OFF MODE (two) – OFF INPUT – EMU 1
AW82B	AIRLK DEPRESS vlv – CL cap – installed O2 vlv (two) – CL
AW82D	EMU H2O (four) – ctr (tb-CL) CCU PWR (two) – OFF
AW82H	EMU H2O SPLY WASTE reg (two) – REGULATING
TW58T	(NOTE: Panel deleted if SH not flown) TNL LTG FLOOD 1 – ON/OFF 2,3,4 (three) – OFF ADP PL ISOL VLV – CL cap – installed

AIRLOCK INNER HATCH
- Actuator Handle – LAT
- Lock Lever – LOCK
- Equal vlv (two) – NORM
- cap (two) – installed

AIRLOCK OUTER HATCH (if SH – C HATCH)
- Actuator Handle – LAT
- Lock Lever – LOCK
- Equal vlv (two) – OFF
- cap (two) – installed

SH HATCH (D HATCH) (if SH flown)
- Actuator Handle – LAT
- Lock Lever – LOCK
- Equal vlv (two) – OFF
- cap (two) – installed

EXT AIRLOCK UPPER HATCH (if EXT A/L flown)
- Actuator Handle – LAT
- Lock Lever – LOCK
- Equal vlv (two) – OFF
- cap (two) – installed

TUNNEL ADAPTER HATCH (if flown)
- Actuator Handle – LAT
- Lock Lever – LOCK
- Equal vlv (two) – OFF
- cap (two) – installed

AFT FLIGHT DECK SWITCH LIST FOR HANDOVER INGRESS

R12L	NOTE: Panel may be blank if no PL requirement (See 9-23 or 9-24)	
R11U	FC GPC PURGE SEQ	– dn (tb-bp)
	PURGE HTR	– GPC
	VLVS (three)	– GPC
	STARTUP HTR (three)	– ENA
	H2O LINE HTR	– A AUTO
	RELIEF HTR	– A AUTO
	MDU PWR	– ON
	BRT sel	– as reqd
R11L	IDP/CRT4 PWR	– ON
	MAJ FUNC	– SM
	ENCRYPTOR	– NORM
	MS AUD CNTL	– NORM
	SPLY H2O TKA INLET	– ctr (tb-OP)
	OUTLET	– ctr (tb-CL)
	TKB INLET	– ctr (tb-OP)
	OUTLET	– ctr (tb-OP)
	TKC INLET	– ctr (tb-OP)
	OUTLET	– ctr (tb-OP)
	DUMP ISOL VLV	– ctr (tb-bp)**
	VLV	– ctr (tb-bp)**
	ENA/NOZ HTR	– OFF
	XOVR VLV	– ctr (tb-CL)
	GALLEY SPLY VLV	– ctr (tb-bp)**
	B SPLY ISOL VLV	– ctr (tb-OP)
R10	MS AUD PWR	– AUD/TONE
	A/G (two)	– T/R
	A/A	– T/R
	ICOM (two)	– T/R
	VOX SENS sel	– as reqd
	PAGE	– dn
	VOL pb (five)	– as reqd
	XMIT/ICOM MODE sel	– as reqd (PTT/VOX recommended)
	LTG PNL sel	– OFF
	FLOOD sel (two)	– ON,BRT
		– (OFF,BRT if night launch)
	BIOMED CH 1 sel	– MIDDECK CTR
	2 sel	– MIDDECK R
R13U	C/W TONE VOL (two)	– as is
	PARAM STATUS	– ctr
	MEM	– ctr
	LAMP TEST	– ctr
	PARAM SEL pb (three)	– 120
	LIMIT SET VALUE pb (three)	– 000
	LIMIT	– LOWER
	FUNC	– ctr
	PARAM	– ctr

AFT FLIGHT DECK SWITCH LIST FOR HANDOVER INGRESS

R13L	PL BAY DR SYS (two)	– DSBL
	MECH PWR SYS (two)	– OFF
	DR	– STOP (tb-as is)
	RAD LAT CNTL SYS (two)	– OFF (tb-LAT)
	CNTL SYS (two)	– OFF (tb-STO)
	KU ANT DIRECT STO	– OFF
	ANT	– GND (tb-STO)
	MMU GN2 SPLY ISOL VLV (two)	– ctr (tb-bp)**

A1U	SLEW AZM	– ctr
	ELEV	– ctr
	RATE	– SLOW
	SIG STRENGTH sel	– S-BD PM
	KU tb (three)	– bp
	sel (two)	– MAN SLEW,dn
	PWR	– OFF
	MODE	– RDR PASSIVE
	RADAR OUTPUT	– HI
	CNTL	– CMD
	SIG PROC HDR	– TV
	LDR	– MMU 1
	TAGS	– CLEAR

A1L	S-BD PL CNTL	– CMD
	ANT POLAR	– L CIRC
	XMTR PWR	– LO
	CH SEL INTRG 1,2 tw (six)	– 910,910
	FREQ SWEEP	– OFF
	MOD	– OFF
	PWR SYS	– OFF
	SEL	– PSP
	PSP CMD OUTPUT	– PL UMB
	PL DATA INTLVR PWR	– ON
	S-BD PM ANT SW ELEC	– 1
	PRE AMP	– 1
	PWR AMPL STBY	– 1
	OPER	– 1
	MODE sel	– STDN HI
	XPNDR	– 1
	NSP DATA RATE XMIT	– HI
	RCV	– HI
	UPLK DATA	– S-BD
	CODING XMIT	– OFF
	RCV	– ON
	PWR	– 1
	ENCRYPTION PWR	– ON
	MODE	– SEL
	SEL	– RCV

AFT FLIGHT DECK SWITCH LIST FOR HANDOVER INGRESS

A1R	S-BD FM CNTL	– CMD
	ANT	– GPC
	PWR	– 1
	DATA SOURCE sel	– ME
	AUD CTR VOICE RCD SEL CH 1 sel	– ICOM A
	2 sel	– ICOM B
	DOCK RING (seven)	– OFF
	SL (seven)	– OFF
	UHF A/G (two)	– OFF
	A/A	– OFF
	PL BAY OUTLETS ICOM (two)	– OFF
AFT MDU	MDU PWR	– OFF
	BRT sel	– as reqd
A6U	DAP	– all off
	SENSE:	-Z
	FLT CNTLR PWR	– OFF
	Unused rotary sw	– full ccw
	ADI ATT	– INRTL
	ERR	– MED
	RATE	– MED
	OS LTG FLOOD sel (two)	– ON,BRT
	PNL sel	– OFF
	INST sel	– OFF
	NUMERIC sel	– OFF
	ANNUN BUS SEL	– OFF
	LAMP TEST	– ctr
	INTEN sel (two)	– VAR,MED
	EVENT TIMER SET pb (four)	– as reqd
	MODE	– UP
	CNTL	– ctr
	TIMER	– ctr
A6U	PL RETEN LOGIC PWR SYS (two)	– OFF
	PL SEL	– 1 MON
	LAT (five)	– OFF (tb-LAT) (tb-bp)
	RDY tb (five)	– gray bp
A6L	(DSP)	
	cb ESS SYS PWR CNTL (two)	– op { Y }
	DEP (four)	– op { Y }
	DOCK LT (four)	– op { Y }
	MN LOG (six)	– op { Y }
	PMA 2/3 GRP 1 HOOKS SYS A (two)	– op { R }
	B (two)	– op { R }
	2 HOOKS SYS A (two)	– op { R }
	B (two)	– op { R }
	SYS PWR (two)	– ctr (tb-OFF)
	PMA 2/3 HOOKS (two)	– ctr (tb-bp)
	PYRO PWR (two)	– OFF
	PSU PWR (two)	– OFF
	VEST DEP VLV (four)	– ctr (tb-bp)**
	LTS (four)	– OFF
A6L	cb MADS PWR MNB	– cl { }
	MADS RCDR PWR	– PCM/WB ENA
	PB FWD	– CMD
	STRAIN GAGE	– PCM ENA
	WB/ACIP PCM	– CMD
	PCM	– CMD
	RCD MODE	– SAMPLE
	FDM CNTL	– DATA
	MAN CALBR sel	– DC 0
	ACIP HTR	– OFF

AFT FLIGHT DECK SWITCH LIST FOR HANDOVER INGRESS

A2	DIGI DIS SEL	– EL/AZ
	X-PNTR SCALE	– X10
A7U	MSTR ALARM pb	– lt off
	PL BAY FLOOD (eight)	– OFF
	PORT RMS LIGHT	– OFF
	CAMR	– ELBOW
	WIRELESS VIDEO (two)	– OFF
	TV CAMR PWR (five)	– ctr (tb-OFF)
	PWR CNTL	– CMD
	CONTR UNIT	– OFF
	DNLK	– ENA
	SYNC	– NORM
	VID IN pb (thirteen)	– lt off
	OUT pb (eight)	– lt off
	CAMR CMD PAN/TILT	– LO RATE
	FOCUS	– ctr
	ZOOM	– ctr
	IRIS	– ctr
	TILT	– ctr
	PAN	– ctr
	MENU pb (three)	– lt off
	MODE pb (three)	– lt off

A7L	(APDS CNTL PNL)	
	CNTL PNL PWR (three)	– OFF
	HTRS/DCU PWR (three)	– OFF
	APDS PWR (three)	– OFF (lt off)
	STATUS lts (thirty-six)	– off
	PYROS (three)	– OFF (lt off)
	PYRO CIRC PROT OFF lts (two)	– off
A4	MSN TIMER sel – MET	

AFT FLIGHT DECK SWITCH LIST FOR HANDOVER INGRESS

A8U	(This panel may be replaced or deleted if RMS not flown)	
	RMS Mode lts (twelve)	– off
	BRAKES	– ON (tb-OFF)
	SAFING	– AUTO (tb-bp)
	MODE sel	– TEST
	AUTO SEQ	– ctr
	lts (two)	– off
	S/W STOP tb	– gray
	C/W TONE VOL	– as reqd
	lts (eleven)	– off
	MSTR ALARM pb	– lt off
	RATE MIN tb	– OFF
	HOLD tb	– OFF
	SCALE tb	– gray
	EE MODE	– OFF
	MAN CONTR	– ctr
	tb (six)	– bp
	B/U JOINT sel	– SY
	PL REL	– OFF
	DIRECT DR	– ctr
	PARAM sel	– PORT TEMP
	LTG ANNUN/NUM sel (two)	– VAR,LO
	PNL/INST sel	– OFF
	JOINT sel	– CRIT TEMP
	SINGLE/DIRECT DR	– ctr
	SHDLR BRACE REL	– ctr (tb-bp)

A8L	(This panel may be deleted if RMS not flown)	
	STBD RMS	– OFF (tb-STO)
		– (OFF (tb-bp) if NO MPMs present)
	RETEN LAT	– OFF (tb-LAT)
		– (OFF (tb-bp) if no MPMs present)
	HTR (two)	– OFF
	R-F-L tb (three)	– gray
		– (bp if no RMS flown)
	RMS SEL	– OFF
	PWR	– OFF
	PORT RMS	– OFF (tb-STO)
		– (OFF (tb-bp) if no MPMs present)
	RETEN LAT	– OFF (tb-LAT)
		– (OFF (tb-bp) if no MRLs present)
	HTR (two)	– OFF
	R-F-L tb (three)	– gray
		– (bp if no RMS flown)
	RMS RHC RATE	– VERN
A3	MON CONTRAST (two)	– ctr
	BRT (two)	– ctr
	COLOR (two)	– as reqd
	TINT (two)	– as reqd
	FUNCTION (two)	– ctr
	PWR (two)	– OFF

AFT FLIGHT DECK SWITCH LIST FOR HANDOVER INGRESS

L9 PS FLOOD sel (two) – ON,BRT
– (OFF,BRT if night launch)
AUD PWR – AUD/TONE
A/G (two) – T/R
A/A – T/R
ICOM (two) – T/R
VOX SENS sel – as reqd
PAGE – dn
VOL pb (five) – as reqd
XMIT/ICOM MODE sel – as reqd (PTT/VOX PTT/PTT recommended)

L10L (MUX)
Verify all lts off
VTR/CC PWR – 0 (dn)
RATE SEL (three) – 1
MUX BYPASS – ACT
MUX/VTR/CC PWR – 0 (dn)

L10L (VIP)
Verify all lts off
PWR – 0 (dn)
ATU – REC
CCTV VIDEO IN – J3

L10L (VTR)
Verify all lts off
ON/STANDBY lt – off
TIMER – OFF
AUDIO OUTPUT SEL – CH-1/2
PHONE LEVEL – midrange
KEY INH – OFF
CHARACTER DISPLAY (LCD) – ON (no BLACK BACK)
DISPLAY SEL – DATA
CHARACTER DISPLAY – OFF
INPUT SEL – VIDEO
COUNTER SEL – TC
AUDIO INPUT – FIX
AUDIO REC LEVEL CH-1 – as is
CH-2 – as is

AFT FLIGHT DECK PAYLOADS SWITCH LIST FOR HANDOVER INGRESS

L10U	(AVIU) SYNC/VIDEO – VIDEO HI-Z/75 – HI-Z PWR SEL – HI
L11U	(PDIP 2) T-0/OIU/OIU – OIU (ctr) DC PWR 1 CABIN P/L – OFF 2 CABIN P/L – OFF
L12UL	SSP-1 Verify all tbs bp APCU 1 CONV – OFF OUTPUT RLY – OP 2 CONV – OFF OUTPUT RLY – OP cb SW PWR 1 CB2 – op { } PDIP 1 PWR 2/KuBAND RLY – op { }
L12UR	SSP-1 Verify all tbs bp TCS PWR – OFF cb SW PWR 2 CB4 – op { } X1/X2 SW PDIP 1 PWR 1 CB3 – op { } ODS CONN MATE X1 TLM PWR – OFF X2 TLM PWR – OFF OIU PWR – OFF
L12LL	SSP-2 cb PDIP 2 PWR 2 CB1 – op { } C/L CAM PWR – OFF
L12LR	SSP-2 cb PDIP 2 PWR 1 CB3 – op { }
L12L	(PDIP 1) Ku BAND RATE – OFF DC PWR 1 CABIN P/L – OFF 2 CABIN P/L – OFF
R12	(VPU/OPP) VPU PWR – OFF
R12	(OPP) cb OBSS SW PWR cb1 – op { Y } OBSS SW PWR – OFF
R12	(OBSS) RSC PWR – OFF ITVC ENA – OFF SPEE PWR – OFF

AFT FLIGHT DECK SWITCH LIST FOR HANDOVER INGRESS

A15:	(All Veh)	
	PS COMM CCU PWR	– OFF ON
	DC UTIL PWR MNC	– OFF
	AC UTIL PWR AC3	– OFF
:A	CRYO TK5 HTRS (four)	– OFF
	O2 RESET/TEST	– ctr
	(OV104)	
:B	cb PPCA CONT PWR (two)	– op {R}
:C	PALLET PWR (two)	– ctr (tb-OFF)
	HTRS (two)	– OFF
:D,E, F,G	HTRS (sixteen)	– OFF
	O2 RESET/TEST (four)	– ctr
:H,I, J,K	cb PALLET ESS (sixteen)	– op {R}
	HTR SNSR (eight)	– op {R}
	(OV103,5)	
:B	cb CNTL PWR PTU 1,2 (two)	– op {Y}
:C	PTU/MAIN BUS A,B (two)	– ctr (tb-OFF)
	ODS MATE X1, X2 (two)	– OFF
:D,E	OPCU 1,2 CONV (two)	– OFF
	V-ADJ (two)	– OFF
	UP/DOWN (two)	– ctr
	APCU 1,2 CONV (two)	– OFF
	OUTPUT (two)	– OFF
:F,G	All switches (ten)	– ctr
:H,I, J,K	All cbs (twenty-four)	– op {R}

A14	RCS/OMS HTR FWD RCS	– OFF
	L POD (two)	– A OFF, B OFF
	R POD (two)	– A OFF, B OFF
	OMS KIT	– OFF
	CRSFD LINES (two)	– A AUTO, B AUTO

A14	RCS/OMS HTR FWD RCS JET (five)	– AUTO
	AFT RCS JET (five)	– AUTO
	CARGO COOL LP HTRS ORB (three) (OV103,5)	– OFF
	CARGO LN (two) (OV103,5)	– OFF
	PYRO (twelve)	– SAFE
	RMS LAT	– SAFE

A13	OS AUD MSTR SPKR VOL sel	– as reqd
	SPKR PWR	– OFF
	GPS PRE AMPL (two) (OV103)	– MNC
	(two) (OV104)	– ON
	PWR (OV103,104)	– ON OFF
	GPS/SIGI PWR (OV103)	– OFF
	blank sw (OV104)	– dn
	GPS ENCRYPT (OV103,4)	– NORM
	GPS/SIGI ENCRYPT (OV103)	– NORM
	blank sw (OV104)	– dn

A12	APU HTR GAS GEN/FU PUMP (three)	– OFF
	LUBE OIL LN (three)	– OFF
	TK/FU LN/H2O SYS (six)	– OFF
	LG ARM/DN RESET	– dn
	FC3 STRUCT RTN	– ctr (tb-ON)
	HYD HTR RUD SPD BK A	– OFF
	B	– AUTO
	BDY FLP A	– AUTO
	B	– OFF
	ELEV A	– AUTO
	B	– OFF
	AFT FUS A	– AUTO
	B	– OFF
	CIRC PUMP PWR 1	– MNA
	2	– MNB
	3	– MNC

AFT FLIGHT DECK SWITCH LIST FOR HANDOVER INGRESS

```
A11     CRYO TK4 HTR (four)          – OFF
                O2 RESET/TEST – ctr
        MS COMM CCU PWR              – ON  OFF
        DC UTIL PWR MNC              – ON
        (OV105)
        PALLET HTRS C,D (two)            – OFF
                TK10 HTRS (four)         – OFF
                        O2 RESET/TEST – ctr
                TK11 HTRS (four)         – OFF
                        O2 RESET/TEST – ctr
                TK12 HTRS (four)         – OFF
                        O2 RESET/TEST – ctr
                TK13 HTRS (four)         – OFF
                        O2 RESET/TEST – ctr
        (OV104)
        CRYO TK SEL (eight) – ctr
        All cbs (104,5)     – op  { R }
```

```
R14:    All cbs – cl  {   }  except:
        (OV104,5)
   :B   cb MNA PALLET DSC 1A/2B – op  { R }
                           3A   – op  { R }
           MNB PALLET DSC 1B    – op  { R }
                           4B   – op  { R }
           MNC PALLET DSC 2A    – op  { R }
                           3B/4A – op  { R }
```

```
R14:C   cb MNA UHF EVA       – op  { Y }
           MNB KU ELEC       – op  { Y }
                   ANT HTR   – op  { Y }
                   CABLE HTR – op  { R }
           MNC KU SIG PROC   – op  { Y }
                 UHF EVA     – op  { Y }
   :D   All cbs – op  { Y }  except:
        cb MNC TV CAB            – cl   {   }
   :E      MNA D CAMR (three)    – op  { Y }
           MNB RMS CAMR (three) – op  { Y }
                                – (op { R } if no
                                    PORT RMS flown)
   :F      ESS 1BC LDG GEAR ARM/DN RESET – op  { R }
```

HARDWARE CAUTION & WARNING CONFIGURATION

UPPER LIMIT CHANGE		TO
4	CABIN PRESS	3.85 V/15.36 psia (OV103)
		3.85 V/15.35 psia (OV104)
		3.85 V/15.42 psia (OV105)
7	OMS TK P OX-L	3.60 V/288 psi (OV103,5)
		3.70 V/296 psi (OV104)
14	CAB O2 FLOW 1	4.90 V/4.90 lbm/hr (OV103)
		4.00 V/5.23 lbm/hr (OV104)
17	OMS TK P FU-L	3.60 V/288 psi
24	CAB O2 FLOW 2	4.90 V/4.90 lbm/hr (OV103,5)
		4.00 V/5.23 lbm/hr (OV104)
37	OMS TK P OX-R	3.60 V/288 psi
39	MPS He Reg 1A P	4.00 V/816.3 psia (OV103)
		4.10 V/815.5 psia (OV104)
		4.10 V/807.0 psia (OV105)
47	OMS TK P FU-R	3.60 V/288 psi
49	MPS He Reg 2A P	4.00 V/810.6 psia (OV103)
54	CAB N2 FLOW 1	4.90 V/4.90 lbm/hr (OV103,5)
		4.00 V/5.23 lbm/hr (OV104)
55	CAB FAN ΔP	4.85 V/0.2" H2O (if SH flown)
59	MPS He Reg 3A P	3.90 V/806.5 psia (OV105)
64	CAB N2 FLOW 2	4.90 V/4.90 lbm/hr (OV103,5)
		4.00 V/5.23 lbm/hr (OV104)
65	PPO2 #1	2.30 V/2.7 psi (if SH flown)
74	CABIN FAN ΔP	4.25 V/6.80" H2O
75	PPCO2 #2	3.80 V/7.6 mmHg (if SH flown)
79	MANF P LH2	3.25 V/65 psi
85	ARS FAN ΔP	4.85 V/0.2" H2O (if SH flown)
95	CAB TOTAL PRESS	1.55 V/13.8 psi (if SH flown)
105	H2O LOOP 1 PUMP OUT P	2.85 V/85.5 psia (OV104)
107	FREON LOOP 1 EVAP OUT T	4.30 V/115.2 °F
117	FREON LOOP 2 EVAP OUT T	4.30 V/115.2 °F

LOWER LIMIT CHANGE		TO
4	CABIN PRESS	3.45 V/13.76 psia (OV103)
		3.45 V/13.75 psia (OV104)
		3.40 V/13.62 psia (OV105)
39	MPS He Reg 1A P	3.30 V/676 psia (OV103)
		3.45 V/677.0 psia (OV105)
49	MPS He Reg 2A P	3.35 V/679.9 psia (OV103)
59	MPS He Reg 3A P	3.30 V/682.8 psia (OV105)
74	CABIN FAN ΔP	2.60 V/4.16" H2O
105	H2O LOOP 1 PUMP OUT P	0.85 V/25.5 psia (OV104)
106	FREON FLOW 1	0.80 V/1186 lb/hr
116	FREON FLOW 2	0.80 V/1186 lb/hr

INHIBIT

8	APU 1 EGT
14	CAB O2 FLOW 1 (OV105)
18	APU 2 EGT
28	APU 3 EGT
30	CRYO O2 P TK4 (if TK4 not flown)
40	CRYO O2 P TK5 (if TK5 not flown)
55	CAB FAN ΔP (if SH flown)
61	CRYO O2 HTR1 TK4 (if TK4 not flown)
65	PPO2 (if SH flown)
71	CRYO O2 HTR2 TK4 (if TK4 not flown)
75	PPCO2 (if SH flown)
77	OMS PBK OXID TK ULL P
80	CRYO H2 P TK4 (if TK4 not flown)
81	CRYO O2 HTR1 TK5 (if TK5 not flown)
85	ARS FAN ΔP (if SH flown unpowered)
87	OMS PBK FUEL TK ULL P
90	CRYO H2 P TK5 (if TK5 not flown)
95	CAB TOTAL PRESS (if SH flown)

MEDS CONFIGURATION FOR INGRESS

MDU	View Angle	Port Config	Selected Port	Flight Critical Bus	Display	Edgekey Menu
CRT1	positive	auto	primary	3	DPS	DPS
CRT2	positive	auto	primary	4	DPS	DPS
CRT3	positive	auto	primary	4	DPS	DPS
CRT4	negative	auto	primary	1	DPS	DPS
CDR1	positive	auto	primary	1	OMS/MPS	SUBSYS STATUS
CDR2	positive	auto	primary	3	A/E PFD	DATA BUS
MFD1	positive	auto	primary	3	HYD/APU	SUBSYS STATUS
MFD2	positive	auto	primary	4	OMS/MPS	SUBSYS STATUS
PLT1	positive	auto	primary	4	A/E PFD	DATA BUS
PLT2	positive	auto	primary	4	HYD/APU	FLT INST
AFD1	negative	auto	n/a	n/a	n/a	n/a

CUE CARD CONFIG

CUE CARD CONFIG

TOP

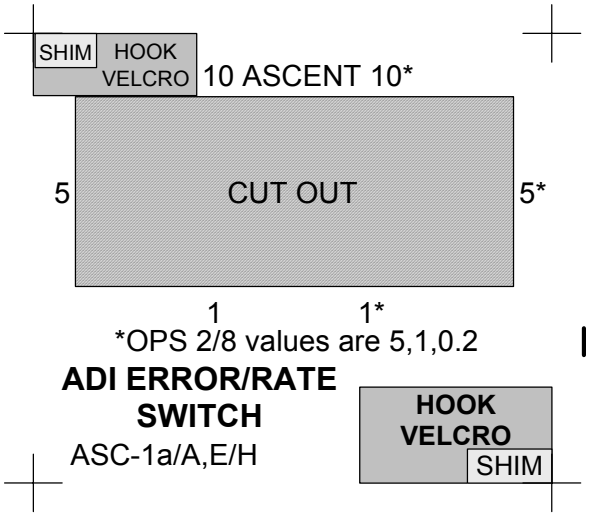

CUE CARD CONFIG

TOP
BACK OF 'ADI ERROR/RATE SWITCH'

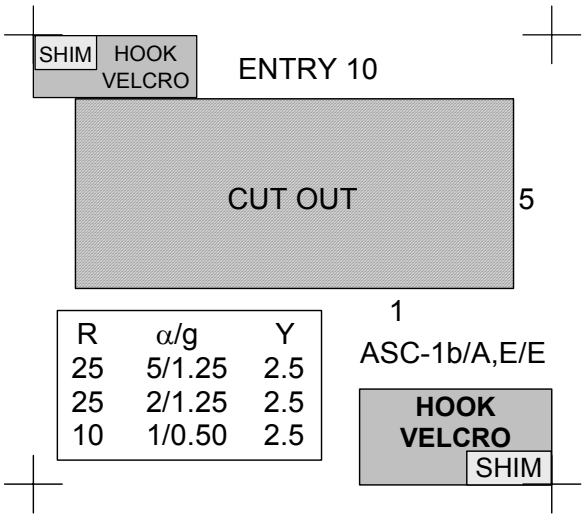

R	α/g	Y
25	5/1.25	2.5
25	2/1.25	2.5
10	1/0.50	2.5

TOP

ASCENT/ENTRY SPEC PASS	NO.	ASC-2a/A,E/E BFS	NO.
GPC MEMORY	0	BFS MEMORY	0
IMU ALIGN (301)	21	GNC	
STRK/COAS CNTL (301)	22	HORIZ SIT	50
RCS (OPS 3)	23	OVERRIDE	51
HORIZ SIT	50	GPS STATUS	55
OVERRIDE	51	SM	
ENT CONTROL (OPS 3)	53	PL BAY DOORS	63
GPS STATUS	55		

TOP
BACK OF ‘ASCENT/ENTRY SPEC’

HOOK VELCRO
SHIM

HOOK VELCRO
SHIM

ASC-2b/A,E/D

TOP

ASC-3a/A,E/E

ALIGN ARROW WITH SBTC TRAILING EDGE FULL FORWARD

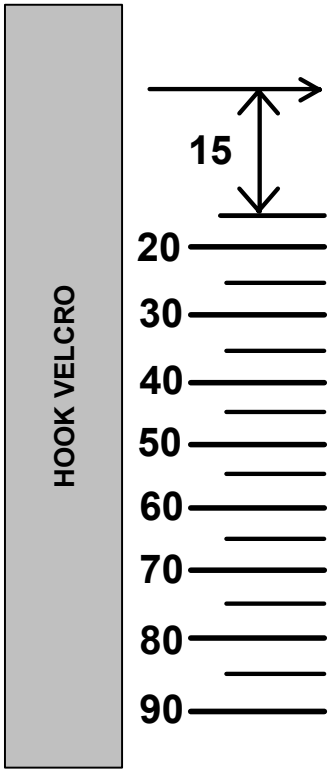

SPEEDBRAKE CMD VS SBTC TRAILING EDGE

TOP
BACK OF
'SPEED BRAKE CMD'

ALIGN ARROW WITH SBTC TRAILING EDGE FULL FORWARD

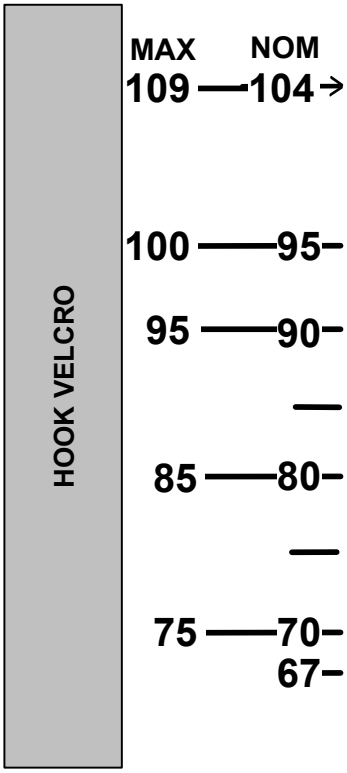

67

THROTTLE CMD VS SBTC TRAILING EDGE

ASC-3b/A,E/D

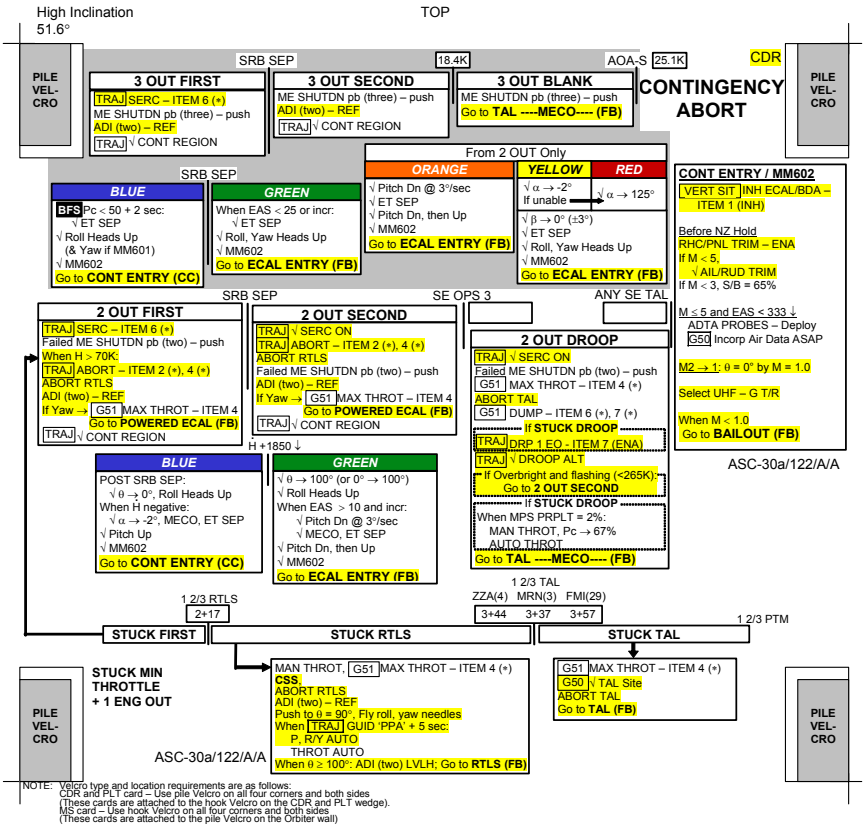
High Inclination
51.6°
TOP
PILE VEL-CRO
SRB SEP
18.4K
AOA-S
25.1K
CDR
CONTINGENCY ABORT
3 OUT FIRST
TRAJ SERC – ITEM 6 (*)
ME SHUTDN pb (three) – push
ADI (two) – REF
TRAJ √ CONT REGION
3 OUT SECOND
ME SHUTDN pb (three) – push
ADI (two) – REF
TRAJ √ CONT REGION
3 OUT BLANK
ME SHUTDN pb (three) – push
Go to TAL ----MECO---- (FB)
From 2 OUT Only
ORANGE
√ Pitch Dn @ 3°/sec
√ ET SEP
√ Pitch Dn, then Up
√ MM602
Go to ECAL ENTRY (FB)
YELLOW
√ α → -2°
If unable
RED
√ α → 125°
√ β → 0° (±3°)
√ ET SEP
√ Roll, Yaw Heads Up
√ MM602
Go to ECAL ENTRY (FB)
SRB SEP
BLUE
BFS Pc < 50 + 2 sec:
√ ET SEP
√ Roll Heads Up
(& Yaw if MM601)
√ MM602
Go to CONT ENTRY (CC)
GREEN
When EAS < 25 or incr:
√ ET SEP
√ Roll, Yaw Heads Up
√ MM602
Go to ECAL ENTRY (FB)
CONT ENTRY / MM602
VERT SIT INH ECAL/BDA – ITEM 1 (INH)
Before NZ Hold
RHC/PNL TRIM – ENA
If M < 5,
√ AIL/RUD TRIM
If M < 3, S/B = 65%
M ≤ 5 and EAS < 333 ↓
ADTA PROBES – Deploy
G50 Incorp Air Data ASAP
M2 → 1: θ = 0° by M = 1.0
Select UHF – G T/R
When M < 1.0
Go to BAILOUT (FB)
ASC-30a/122/A/A
SRB SEP
SE OPS 3
ANY SE TAL
2 OUT FIRST
TRAJ SERC – ITEM 6 (*)
Failed ME SHUTDN pb (two) – push
When H > 70K:
TRAJ ABORT – ITEM 2 (*), 4 (*)
ABORT RTLS
ADI (two) – REF
If Yaw → G51 MAX THROT – ITEM 4
Go to POWERED ECAL (FB)
TRAJ √ CONT REGION
2 OUT SECOND
TRAJ √ SERC ON
TRAJ ABORT – ITEM 2 (*), 4 (*)
ABORT RTLS
Failed ME SHUTDN pb (two) – push
ADI (two) – REF
If Yaw → G51 MAX THROT – ITEM 4
Go to POWERED ECAL (FB)
TRAJ √ CONT REGION
2 OUT DROOP
TRAJ √ SERC ON
Failed ME SHUTDN pb (two) – push
G51 MAX THROT – ITEM 4 (*)
ABORT TAL
G51 DUMP – ITEM 6 (*), 7 (*)
If STUCK DROOP
TRAJ DRP 1 EO - ITEM 7 (ENA)
TRAJ √ DROOP ALT
If Overbright and flashing (<265K):
Go to 2 OUT SECOND
If STUCK DROOP
When MPS PRPLT = 2%:
MAN THROT, Pc → 67%
AUTO THROT
Go to TAL ----MECO---- (FB)
H +1850 ↓
BLUE
POST SRB SEP:
√ θ → 0°, Roll Heads Up
When H negative:
√ α → -2°, MECO, ET SEP
√ Pitch Up
√ MM602
Go to CONT ENTRY (CC)
GREEN
√ θ → 100° (or 0° → 100°)
√ Roll Heads Up
When EAS > 10 and incr:
√ Pitch Dn @ 3°/sec
√ MECO, ET SEP
√ Pitch Dn, then Up
√ MM602
Go to ECAL ENTRY (FB)
1 2/3 RTLS
2+17
1 2/3 TAL
ZZA(4) MRN(3) FMI(29)
3+44 3+37 3+57
1 2/3 PTM
STUCK FIRST
STUCK RTLS
STUCK TAL
PILE VEL-CRO
STUCK MIN THROTTLE + 1 ENG OUT
ASC-30a/122/A/A
MAN THROT, G51 MAX THROT – ITEM 4 (*)
CSS,
ABORT RTLS
ADI (two) – REF
Push to θ = 90°, Fly roll, yaw needles
When TRAJ GUID 'PPA' + 5 sec:
P, R/Y AUTO
THROT AUTO
When θ ≥ 100°: ADI (two) LVLH; Go to RTLS (FB)
G51 MAX THROT – ITEM 4 (*)
G50 √ TAL Site
ABORT TAL
Go to TAL (FB)
PILE VEL-CRO
NOTE: Velcro type and location requirements are as follows:
CDR and PLT card – Use pile Velcro on all four corners and both sides
(These cards are attached to the hook Velcro on the CDR and PLT wedge).
MS card – Use hook Velcro on all four corners and both sides
(These cards are attached to the pile Velcro on the Orbiter wall)

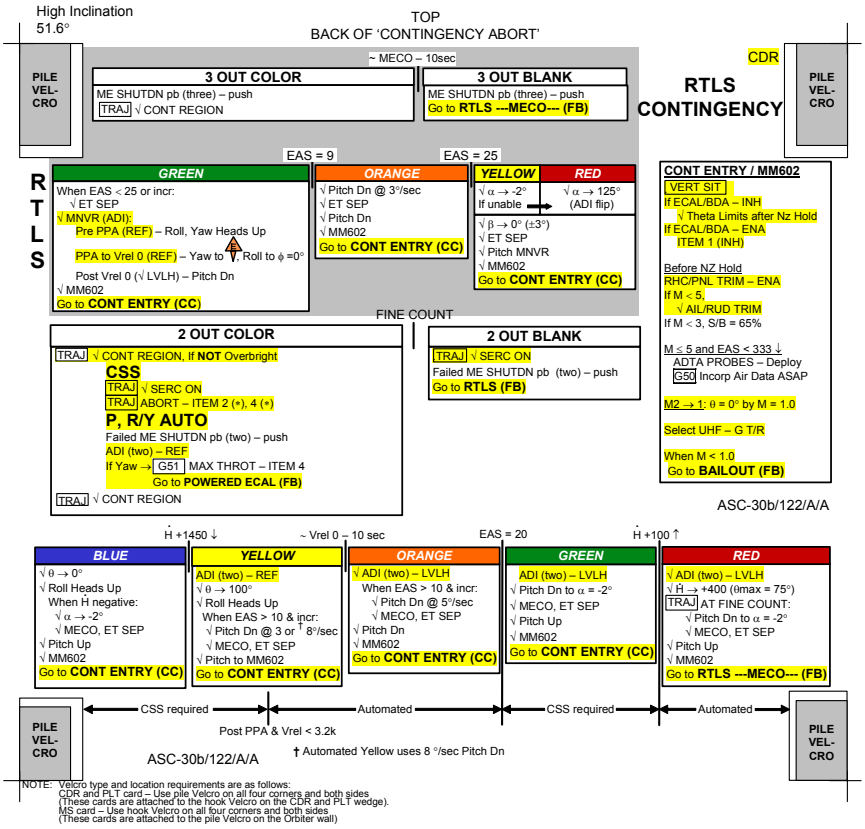
High Inclination
51.6°
TOP
BACK OF 'CONTINGENCY ABORT'
PILE VEL-CRO
~ MECO – 10sec
3 OUT COLOR
ME SHUTDN pb (three) – push
TRAJ √ CONT REGION
3 OUT BLANK
ME SHUTDN pb (three) – push
Go to RTLS ---MECO--- (FB)
CDR
RTLS CONTINGENCY
PILE VEL-CRO
EAS = 9
EAS = 25
RTLS
GREEN
When EAS < 25 or incr:
√ ET SEP
√ MNVR (ADI):
Pre PPA (REF) – Roll, Yaw Heads Up
PPA to Vrel 0 (REF) – Yaw to V, Roll to ϕ =0°
Post Vrel 0 (√ LVLH) – Pitch Dn
√ MM602
Go to CONT ENTRY (CC)
ORANGE
√ Pitch Dn @ 3°/sec
√ ET SEP
√ Pitch Dn
√ MM602
Go to CONT ENTRY (CC)
YELLOW
√ α → -2°
If unable
√ β → 0° (±3°)
√ ET SEP
√ Pitch MNVR
√ MM602
Go to CONT ENTRY (CC)
RED
√ α → 125°
(ADI flip)
CONT ENTRY / MM602
VERT SIT
If ECAL/BDA – INH
√ Theta Limits after Nz Hold
If ECAL/BDA – ENA
ITEM 1 (INH)
Before NZ Hold
RHC/PNL TRIM – ENA
If M < 5,
√ AIL/RUD TRIM
If M < 3, S/B = 65%
M ≤ 5 and EAS < 333 ↓
ADTA PROBES – Deploy
G50 Incorp Air Data ASAP
M2 → 1: θ = 0° by M = 1.0
Select UHF – G T/R
When M < 1.0
Go to BAILOUT (FB)
FINE COUNT
2 OUT COLOR
TRAJ √ CONT REGION, If NOT Overbright
CSS
TRAJ √ SERC ON
TRAJ ABORT – ITEM 2 (*), 4 (*)
P, R/Y AUTO
Failed ME SHUTDN pb (two) – push
ADI (two) – REF
If Yaw → G51 MAX THROT – ITEM 4
Go to POWERED ECAL (FB)
TRAJ √ CONT REGION
2 OUT BLANK
TRAJ √ SERC ON
Failed ME SHUTDN pb (two) – push
Go to RTLS (FB)
ASC-30b/122/A/A
Ḣ +1450 ↓
~ Vrel 0 – 10 sec
EAS = 20
Ḣ +100 ↑
BLUE
√ θ → 0°
√ Roll Heads Up
When Ḣ negative:
√ α → -2°
√ MECO, ET SEP
√ Pitch Up
√ MM602
Go to CONT ENTRY (CC)
YELLOW
ADI (two) – REF
√ θ → 100°
√ Roll Heads Up
When EAS > 10 & incr:
√ Pitch Dn @ 3 or † 8°/sec
√ MECO, ET SEP
√ Pitch to MM602
Go to CONT ENTRY (CC)
ORANGE
√ ADI (two) – LVLH
When EAS > 10 & incr:
√ Pitch Dn @ 5°/sec
√ MECO, ET SEP
√ Pitch Dn
√ MM602
Go to CONT ENTRY (CC)
GREEN
ADI (two) – LVLH
√ Pitch Dn to α = -2°
√ MECO, ET SEP
√ Pitch Up
√ MM602
Go to CONT ENTRY (CC)
RED
√ ADI (two) – LVLH
√ Ḣ → +400 (θmax = 75°)
TRAJ AT FINE COUNT:
√ Pitch Dn to α = -2°
√ MECO, ET SEP
√ Pitch Up
√ MM602
Go to RTLS ---MECO--- (FB)
CSS required
Automated
CSS required
Automated
Post PPA & Vrel < 3.2k
† Automated Yellow uses 8 °/sec Pitch Dn
PILE VEL-CRO
ASC-30b/122/A/A
PILE VEL-CRO
NOTE: Velcro type and location requirements are as follows:
CDR and PLT card – Use pile Velcro on all four corners and both sides
(These cards are attached to the hook Velcro on the CDR and PLT wedge).
MS card – Use hook Velcro on all four corners and both sides
(These cards are attached to the pile Velcro on the Orbiter wall)

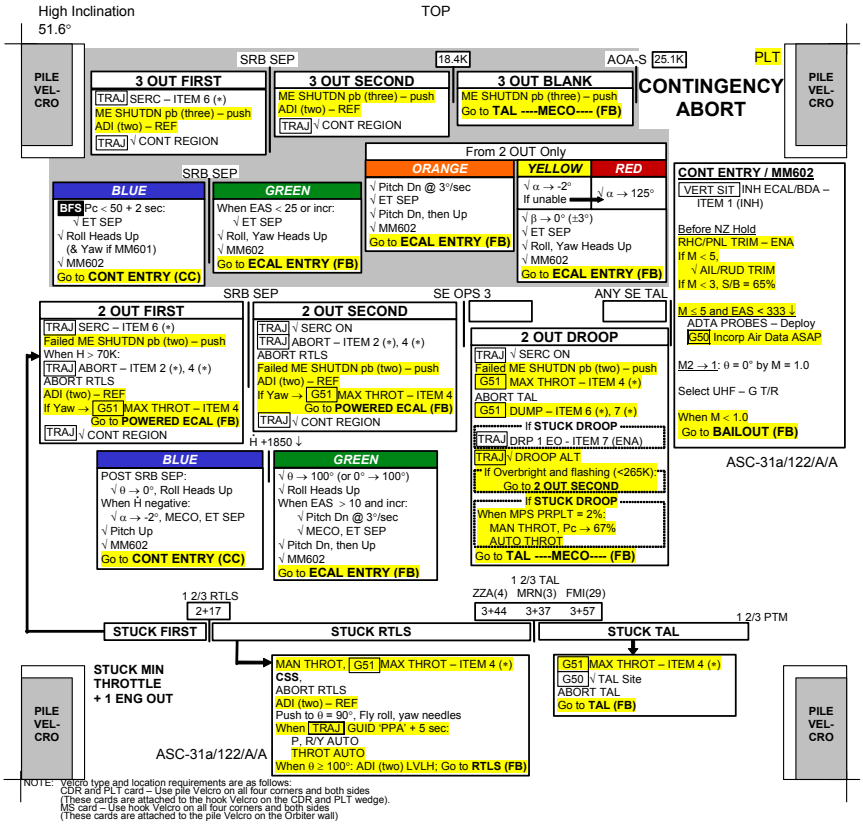
High Inclination
51.6°
TOP
PILE VEL-CRO
SRB SEP
18.4K
AOA-S
25.1K
PLT
CONTINGENCY ABORT
PILE VEL-CRO
3 OUT FIRST
TRAJ SERC – ITEM 6 (*)
ME SHUTDN pb (three) – push
ADI (two) – REF
TRAJ √ CONT REGION
3 OUT SECOND
ME SHUTDN pb (three) – push
ADI (two) – REF
TRAJ √ CONT REGION
3 OUT BLANK
ME SHUTDN pb (three) – push
Go to TAL ----MECO---- (FB)
From 2 OUT Only
ORANGE
√ Pitch Dn @ 3°/sec
√ ET SEP
√ Pitch Dn, then Up
√ MM602
Go to ECAL ENTRY (FB)
YELLOW
√ α → -2°
If unable
RED
√ α → 125°
√ β → 0° (±3°)
√ ET SEP
√ Roll, Yaw Heads Up
√ MM602
Go to ECAL ENTRY (FB)
SRB SEP
BLUE
BFS Pc < 50 + 2 sec:
√ ET SEP
√ Roll Heads Up
(& Yaw if MM601)
√ MM602
Go to CONT ENTRY (CC)
GREEN
When EAS < 25 or incr:
√ ET SEP
√ Roll, Yaw Heads Up
√ MM602
Go to ECAL ENTRY (FB)
CONT ENTRY / MM602
VERT SIT INH ECAL/BDA – ITEM 1 (INH)
Before NZ Hold
RHC/PNL TRIM – ENA
If M < 5,
√ AIL/RUD TRIM
If M < 3, S/B = 65%
M ≤ 5 and EAS < 333 ↓
ADTA PROBES – Deploy
G50 Incorp Air Data ASAP
M2 → 1: θ = 0° by M = 1.0
Select UHF – G T/R
When M < 1.0
Go to BAILOUT (FB)
ASC-31a/122/A/A
SRB SEP
SE OPS 3
ANY SE TAL
2 OUT FIRST
TRAJ SERC – ITEM 6 (*)
Failed ME SHUTDN pb (two) – push
When H > 70K:
TRAJ ABORT – ITEM 2 (*), 4 (*)
ABORT RTLS
ADI (two) – REF
If Yaw → G51 MAX THROT – ITEM 4
Go to POWERED ECAL (FB)
TRAJ √ CONT REGION
2 OUT SECOND
TRAJ √ SERC ON
TRAJ ABORT – ITEM 2 (*), 4 (*)
ABORT RTLS
Failed ME SHUTDN pb (two) – push
ADI (two) – REF
If Yaw → G51 MAX THROT – ITEM 4
Go to POWERED ECAL (FB)
TRAJ √ CONT REGION
2 OUT DROOP
TRAJ √ SERC ON
Failed ME SHUTDN pb (two) – push
G51 MAX THROT – ITEM 4 (*)
ABORT TAL
G51 DUMP – ITEM 6 (*), 7 (*)
If STUCK DROOP
TRAJ DRP 1 EO - ITEM 7 (ENA)
TRAJ √ DROOP ALT
If Overbright and flashing (<265K):
Go to 2 OUT SECOND
If STUCK DROOP
When MPS PRPLT = 2%:
MAN THROT, Pc → 67%
AUTO THROT
Go to TAL ----MECO---- (FB)
H +1850 ↓
BLUE
POST SRB SEP:
√ θ → 0°, Roll Heads Up
When H negative:
√ α → -2°, MECO, ET SEP
√ Pitch Up
√ MM602
Go to CONT ENTRY (CC)
GREEN
√ θ → 100° (or 0° → 100°)
√ Roll Heads Up
When EAS > 10 and incr:
√ Pitch Dn @ 3°/sec
√ MECO, ET SEP
√ Pitch Dn, then Up
√ MM602
Go to ECAL ENTRY (FB)
1 2/3 RTLS
2+17
1 2/3 TAL
ZZA(4) MRN(3) FMI(29)
3+44 3+37 3+57
1 2/3 PTM
STUCK FIRST
STUCK RTLS
STUCK TAL
PILE VEL-CRO
STUCK MIN THROTTLE + 1 ENG OUT
ASC-31a/122/A/A
MAN THROT, G51 MAX THROT – ITEM 4 (*)
CSS,
ABORT RTLS
ADI (two) – REF
Push to θ = 90°. Fly roll, yaw needles
When TRAJ GUID 'PPA' + 5 sec:
P, R/Y AUTO
THROT AUTO
When θ ≥ 100°: ADI (two) LVLH; Go to RTLS (FB)
G51 MAX THROT – ITEM 4 (*)
G50 √ TAL Site
ABORT TAL
Go to TAL (FB)
PILE VEL-CRO
NOTE: Velcro type and location requirements are as follows:
CDR and PLT card – Use pile Velcro on all four corners and both sides
(These cards are attached to the hook Velcro on the CDR and PLT wedge).
MS card – Use hook Velcro on all four corners and both sides
(These cards are attached to the pile Velcro on the Orbiter wall)

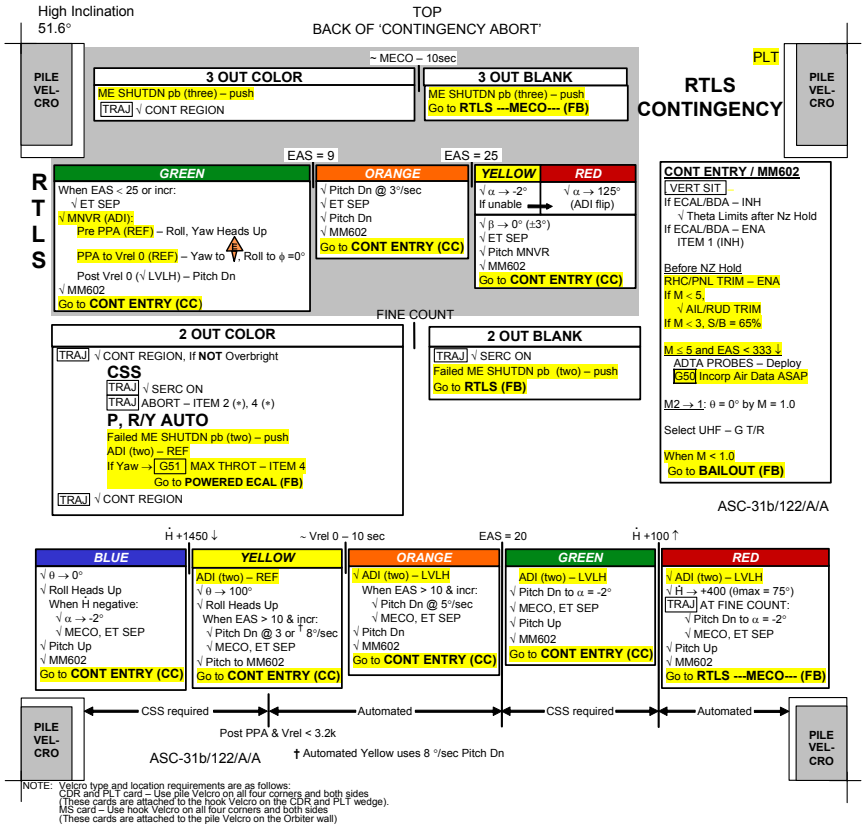

(reduced copy)

PLT

FAB USE ONLY (B)CC 10-6 ASC/122/FIN

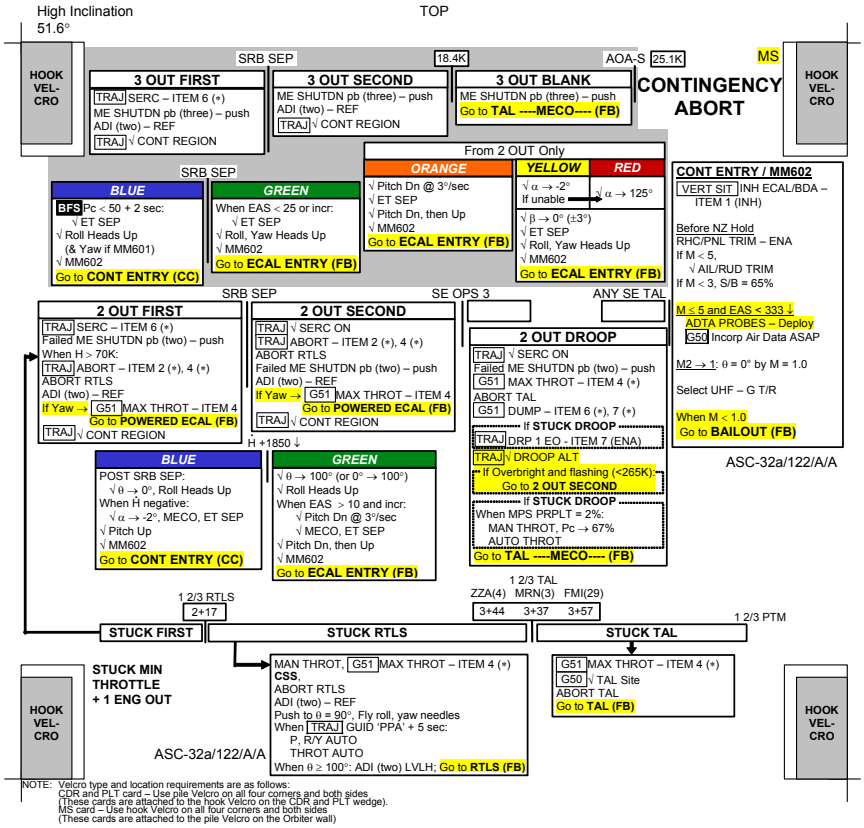

(reduced copy)

MS

FAB USE ONLY (C)CC 10-5 ASC/122/FIN

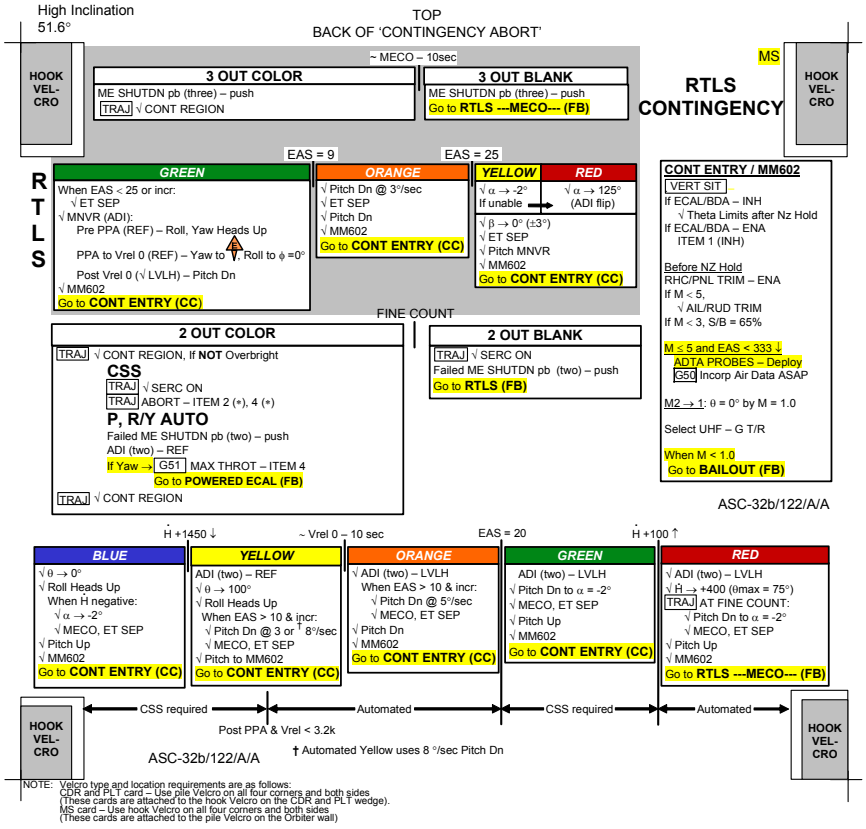

(reduced copy)

MS

FAB USE ONLY (C)CC 10-6 ASC/122/FIN

HOOK VELCRO

OMS 2 BURN MONITOR

HOOK VELCRO

OMS TEMP* L R FU IN P ≥ 230 230	OMS ENG FAIL
≤ 214 212 or No FU IN P	OMS PRPLT FAIL
OMS PC* & OMS ↓ (BFS: √accel) ENG VLV 1 or 2 < 70 or OX IN P > 227	OMS ENG FAIL
OX IN P ≤ 227 or No OX IN P	OMS PRPLT FAIL
OMS OX/FU TK P (√ENG IN P) OX/FU LOW	He PRESS/VAP ISOL (two) – OP If aff TK P not incr: He PRESS/VAP ISOL (two) – CL At PC < 72 or OMS TEMP or HP > 85 : OMS PRPLT FAIL
OX & FU HIGH	He PRESS/VAP ISOL (two) – CL Cycle He A(B) to maintain TK P 234-284
OMS He TK P LOW (√ OMS/MPS)	At He P < 640 or QTY ≤ 41: If HP < 85 : OMS XFEED from good OMS At HP > 85 : OMS PRPLT FAIL
OMS N2 REG P HIGH or LOW	OMS ENG – ARM
OMS N2 TK P LOW (√ OMS/MPS)	At N2 TK P < 470: OMS ENG – ARM
OMS GMBL PRI fail	L(R) OMS GMBL – SEC (twice)
SEC fail	If high RCS usage: OMS ENG FAIL
GPC **1(4) &** Burning OMS aff	aff GPC PWR – OFF If SEC GMBL avail: aff MDM FF 1(4) – OFF,ON L(R) OMS GMBL – SEC (twice)
SEC GMBL lost	If high RCS usage: OMS ENG FAIL
2 FAs lost	√MAN SHUTDN
I/O ERROR FA **1(4)**	L(R) OMS GMBL – SEC
	I/O RESET (if recov: BFS I/O RESET) If high RCS usage: OMS ENG FAIL
2 FAs lost	√MAN SHUTDN
BCE STRG D	I/O RESET (if recov: >>)
1(4)	If high RCS usage: L(R) OMS GMBL – SEC (twice)
I/O ERROR PCM	OI PCMMU PWR – 2(1)

*If XFD, BLDN, or sensor fail, monitor ENG IN P for off-nominal performance

TOP
BACK OF 'OMS BURN MONITOR'

HOOK VELCRO **OMS FAILURES** **HOOK VELCRO**

LEFT OMS

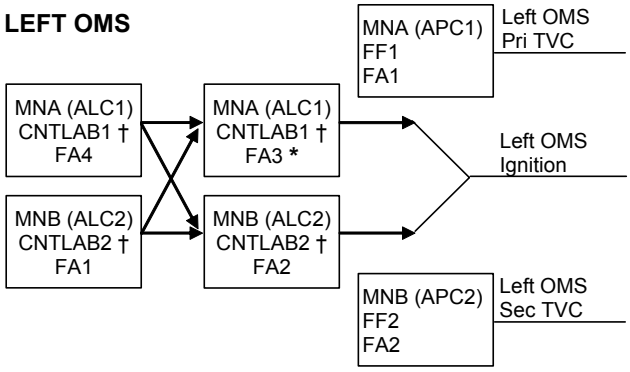

† If CNTL AB1 or AB2 (CA1 or CA2) failed and ign path still exists at OMS fail, assume L(R) OMS ↓ is PRPLT FAIL

* If L(R) P_c failed high during burn, or FA3(4) failed, at L(R) OMS fail, no guidance downmode after L(R) OMS ENG switch OFF (TGO slow, ADI needles in error, 6 ft/s underburn)

RIGHT OMS

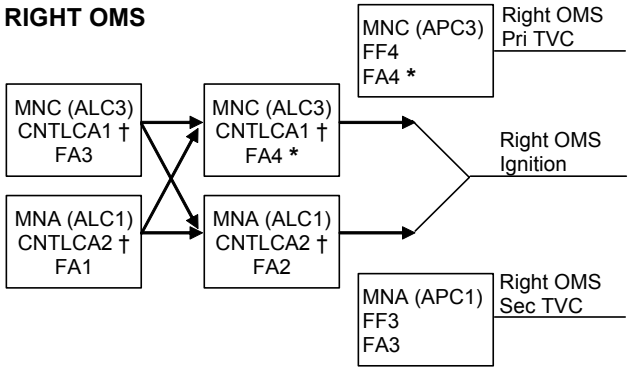

If two FA MDMs lost		
MDMs	Preburn: ENG – OFF	During burn: MAN SHUTDN
1,2	LEFT (TVC)	BOTH
1,3	RIGHT (IGN)	LEFT
1,4	LEFT (IGN)	RIGHT
2,3	LEFT (IGN)	RIGHT
2,4	RIGHT (IGN)	LEFT
3,4	RIGHT (TVC)	BOTH

ASC-5b/A,O,E/I

(reduced copy)

HOOK VELCRO	OMS 2/ ORBIT OMS BURNS	HOOK VELCRO

√MM105/202(302)
Enter TGO +5 sec (2 eng) or TGO +10 sec (1 eng)
√BURN ATT (INRTL) then REF, pb – push
√ENG SEL √DAP TRANS – NORM (MM202)
CNTL PWR (two) – ON √DAP – AUTO(PASS)/DISC
√GMBL TRIM
2 engine: P = +0.4 LY = -5.7 RY = +5.7
1 engine: P = +0.4 LY = +5.2 RY = -5.2
L,R OMS He PRESS/VAP ISOL A (two) – OP
. . . Wait 2 sec . . .
L,R OMS He PRESS/VAP ISOL B (two) – GPC (OP for SE burn)

		GPC	OP	CL
ORB BURN	A			
	B			

TIG-2 SEL OMS ENG(s) – ARM/PRESS (√P VLVs OP)
If P VLV CL: Aff OMS ENG – OFF

> WARNING
> Do not burn aff engine if:
> OMS N2 TK P < 470(564) (NONCRIT BURN)
> He TK P < 640
> FU ENG IN P < 216(244)
> OX ENG IN P < 151(244)

ΔVTOT: OMS XFEED RETURN (Planned Single Engine)

-:15 EXEC
If OMS ENG P_C MSG and non critical burn: Aff ENG – OFF
If Leaking OMS PROP, burn RCS +X TIG - 15 sec to OMS IGN + 1 sec
:00 TIG; start watch (√P_C, ΔVTOT, ENG VLVs)

OMS PRPLT FAIL:
HP < 85 (CONTINUE BURN):
Failed OMS ENG – OFF
√XFEED (two) – CL
TK ISOL (two) – CL
He PRESS (two) – CL
HP > 85 (STOP BURN):
OMS ENG (two) – OFF
√Failed OMS XFEED (two) – CL
TK ISOL (two) – CL
He PRESS (two) – CL
OMS ENG FAIL:
ASCENT or CRIT O/O (Continue Burn)
Failed ENG – OFF
OMS XFEED at → 1/2 ΔVTOT at FAIL
RCS COMPLETION: (Hp < 85 or CRIT O/O)
Interconnect to either OMS that was ENG FAIL
THC +X (Hp = 85)
Post burn, AFT RCS RECONFIG

CUTOFF
+:02 OMS ENG(s) – OFF (if < 3 IMU, at ☐:☐☐)
Trim Residuals:

OMS 2	TAIL ONLY CNTL	Orbit
VGO X < 0.2 fps VGO Y,Z < 2 fps	VGO X < +0.2 fps	All axes < 0.2 fps

ASC-6a/122/A,O/A

(reduced copy)

TOP
BACK OF 'OMS2/ORBIT OMS BURNS'

HOOK VELCRO	**OPS 1 RCS BURN**	HOOK VELCRO

AFT RCS

√RCS BURN CONFIG:
OMS TK ISOL (all) – OP
L(R) OMS XFEED (two) – OP
R(L) OMS XFEED (two) – CL
AFT L,R RCS XFEED (four) – OP
TK ISOL (six) – CL

OMS TK switch at 1/2 ΔVTOT (If reqd)

TIG-2 L,R OMS He PRESS/VAP ISOL A – OP
. . . Wait 2 sec . . .
L,R OMS He PRESS/VAP ISOL B – OP
√MM105
CNTLR PWR (two) – ON
√BURN ATT (INRTL) then REF, pb – push
√RCS SEL
DAP: INRTL/DISC
:00 + X
Maintain PITCH ATT ERR ± 3°
Monitor OMS data
Monitor ΔVTOT
CUTOFF Release THC
CNTLR PWR (two) – OFF

FWD RCS

FRCS BURN PREP
Load DUMMY target for FRCS attitude
RCS SEL – ITEM 4 EXEC
TIG @ TTA = 2:00 or as reqd
ΔVX = - 2.1 (ITEM 19)
ΔVY = 0 (ITEM 20)
ΔVZ = +1.0 (ITEM 21)
LOAD – ITEM 22 EXEC
TIMER – ITEM 23 EXEC
TIG-10 Auto Mnvr to ATT
When in attitude:
ADI ATT – REF (push)
Load External ΔV Burn Target
ΔVX = +80
ΔVY = 0
ΔVZ = 0
LOAD – ITEM 22 EXEC
TIMER – ITEM 23 EXEC
√VGOX = negative
√VGOY = 0
√VGOZ = + 21 ± 2
√REF ball – 0,0,0

NOTE
Error needles invalid during burn
Burn time = ~2X TGO
TGT Hp = 85 for ASCENT

-:30 CNTLR PWR (two) – ON
DAP: INRTL/DISC
:00 -X
CUTOFF CUR HP = TGT HP, release THC
CNTLR PWR (two) – OFF

ASC-6b/122/A,O/A

(reduced copy)

TOP

ASCENT ADI - NOMINAL

TIME	θ	H	$\dot{H}$
0:30	68	9K	640
0:50	62	26K	974
1:10	55	49K	1407
1:30	39	82K	1875
1:50	31	123K	2187

(122 OCFR1 CY)

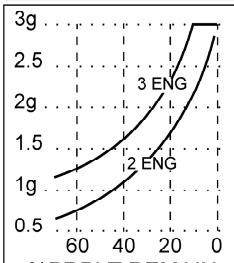

HOOK VELCRO

HOOK VELCRO

-STAGING-

V_I	θ	H	$\dot{H}$
6	19	217K	1722
7	16	275	1269
8	13	310	920
9	11	332	637
10	9	345	405
12	6	356	64
14	9	355	-146
16	25	350	-231
18	23	344	-267
20	21	339	-218
22	19	337	-105
24	17	337	65
25819	13	345	272

ASC-14a/122/A/A

HOOK VELCRO

TOP
BACK OF 'ASCENT
ADI - NOMINAL'

ENTRY ALPHA

VR	α ref	R	H	$\dot{H}$ref	Rref
25	HI 40 LO	4432	400		
24	HI 40 LO	2625	248	-46	L79
23	43 40 37	2156	240	-63	69
22	43 40 37	1797	233	-83	63
21	43 40 37	1514	226	-105	60
20	43 40 37	1290	219	-123	59
19	43 40 37	1114	213	-146	60
18	43 40 37	978	207	-168	R60
17	43 40 37	859	201	-187	61
16	43 40 37	767	193	-196	63

KSC 15

MAX L/D	
M	α
3	17
2	15
1	12

(122 OCFR1 CY)

HOOK VELCRO

ASC-14b/122/A,E/A

HOOK VELCRO

HOOK VELCRO

15	43 40 37	684	187	-118		64
14	43 40 37	612	182	-127		62
13	43 40 37	544	178	-137		60
12	43 40 37	482	173	-153		58
11	42 39 36	425	168	-195		57
10	41 38 35	374	162	-174	L51	
9	39 36 33	326	158	-207	44	
8	37 34 31	278	150	-238	40	
7	33 30 27	229	140	-266	39	
6	30 27 24	185	129	-271	40	
5	26 23 20	141	116	-273	40	
4	22 19 18	106	103	-264		R42
3	19 16 15	74	90	-248		39
2.5	14	61	81	-257		
2	14	50	76	-260		
1.5	11	39	69	-308		
1	9	28	54	-263		

HOOK VELCRO

(reduced copy)

FAB USE ONLY CC 10-11 ASC/122/FIN

TOP

HOOK VELCRO	AOA DEORBIT BURN (2 ENG)	HOOK VELCRO

√MM302 √OMS BOTH
Enter TGO + 5 sec
√TRIM: P +0.4, LY -5.7, RY +5.7
L,R OMS He PRESS/VAP ISOL A (two) – GPC
B (two) – OP
√DAP – AUTO(PASS)/DISC
ADI – LVLH(REF)/HI/MED
FLT CNTLR PWR (two) – ON

TIG-2 OMS ENG (two) – ARM/PRESS
- :15 EXEC
- :15 If OMS AFT QTY < 11%, THC +X to OMS IGN + 1 sec
:00 Start watch (√P_C, ΔVTOT, ENG VLVs)

* **OMS PRPLT FAIL** (CONTINUE BURN): *
* Failed OMS ENG – OFF *
* ITEM 18 +0 EXEC *
* When good OMS QTY: *
* 5%: L, R OMS XFEED (four) – OP *
* 4%: Good OMS TK ISOL (two) – CL *
* If OMS P_C < 80 or OMS TEMP, *
* OMS ENG – OFF *
* √ADI – LVLH, center needles *
* RCS COMPLETION *
* **OMS ENG FAIL:** *
* Failed OMS ENG – OFF *
* OMS XFEED at 1/2 ΔVTOT at fail [ ][ ][ ] *
* or OMS QTY [ ][ ] %L or [ ][ ] %R *
* **2nd OMS FAIL (ENG or PRPLT):** *
* Failed OMS ENG – OFF *
* If PRPLT FAIL: *
* Secure aff OMS *
* ITEM 18 +0 EXEC *
* √ADI – LVLH, center needles *
* Interconnect good OMS to RCS *
* THC +X (√OMS% vs RCS Burn Time) *
* RCS I'CNCT TK SW (N/A for OMS PRPLT FAIL) *
* THC +X (√OMS% vs RCS Burn Time) *
* AFT RCS RECONFIG *
* RCS COMPLETION *

ASC-8a/A/E

HINGE

(reduced copy)

TOP
HINGED AT BOTTOM OF
'AOA DEORBIT BURN (2 ENG)'
HINGE

RCS COMPLETION:

If DIRECT INSERTION:

THC +X to ΔVTOT = 0 or TOT AFT QTY 1 [ ][ ][ ] %

At AFT QTY 1 if CUR ΔVTOT:

THC +X to FLIP ΔV or TOT AFT QTY 2 [5][3] % then FRCS COMPLETION

FLIP ΔV [4][8] FRCS COMPLETION

AFT ΔV [2][9] THC +X to TGT ΔV

TGT ΔV [0][0]

If w/OMS 1:

THC +X to TGT HP or TOT AFT QTY 1 [ ][ ][ ] %

At AFT QTY 1 if CUR HP:

THC +X to FLIP HP or TOT AFT QTY 2 [5][3] % then FRCS COMPLETION

FLIP HP [ ][ ] FRCS COMPLETION

AFT HP [ ][ ] THC +X to TGT HP

TGT HP [ ][ ]

FRCS COMPLETION:

Mnvr to -X Att (pitch up at 3°/sec to VGOz = +1/4 ΔVTOT)

THC -X to ΔVTOT = 0 or FRCS depletion (JETS FAIL OFF)

CUTOFF

+ :02 OMS ENG(s) – OFF (If < 3 IMU, at [ ]:[ ][ ])

* AFT RCS RECONFIG if INTERCONNECT *

Trim X,Z residuals < 2 fps (< 0.5 fps if shallow)

ASC-8aa/122/A/A

(reduced copy)

TOP

BACK OF 'AOA DEORBIT BURN (2 ENG)'

HOOK VELCRO	AOA DEORBIT BURN (1 ENG)	HOOK VELCRO

√MM302 √OMS L or R
√OMS BURN CONFIG (L or R XFEED)
Enter TGO + 10 sec
√TRIM: P +0.4, LY +5.2, RY -5.2
L,R OMS He PRESS/VAP ISOL A (two) – OP
. . . Wait 2 sec . . . B (two) – OP
√DAP – AUTO(PASS)/DISC
ADI – LVLH(REF)/HI/MED
FLT CNTLR PWR (two) – ON
TIG-2 Good OMS ENG – ARM/PRESS
- :15 EXEC
- :15 If OMS AFT QTY < 11%, THC +X to OMS IGN + 1 sec
:00 Start watch (√P_C, ΔVTOT, ENG VLVs)

OMS XFEED RETURN at ΔVTOT = ☐☐☐
or ☐ ☐☐ at ☐☐ %
L,R OMS TK ISOL (four) – OP
XFEED (four) – CL

* **OMS PRPLT FAIL** (CONTINUE BURN): *
* OMS ENG – OFF *
* ITEM 18 +0 EXEC *
* Secure aft OMS *
* √ADI – LVLH, center needles *
* Interconnect good OMS to RCS *
* THC +X (√OMS% vs RCS Burn Time) *
* AFT RCS RECONFIG *
* RCS COMPLETION *
* **OMS ENG FAIL** (CONTINUE BURN): *
* OMS ENG – OFF *
* √ADI – LVLH, center needles *
* Interconnect good OMS to RCS *
* THC +X (√OMS% vs RCS Burn Time) *
* RCS I'CNCT TK SW *
* THC +X (√OMS% vs RCS Burn Time) *
* AFT RCS RECONFIG *
* RCS COMPLETION *
* **RCS +X JET FAIL OFF:** *
* ITEM 18 +0 EXEC *
* G23 Resel jet *

ASC-8b/A/B

HINGE

(reduced copy)

TOP
HINGED AT BOTTOM OF
'AOA DEORBIT BURN (1 ENG)'
HINGE

RCS COMPLETION:

If DIRECT INSERTION:

THC +X to ΔVTOT = 0 or TOT AFT QTY 1 [ ][ ][ ] %

At AFT QTY 1 if CUR ΔVTOT:

THC +X to FLIP ΔV or TOT AFT QTY 2 [5][3] % then FRCS COMPLETION

FLIP ΔV [4][8] ---

FRCS COMPLETION

AFT ΔV [2][9] ---

THC +X to TGT ΔV

TGT ΔV [0][0] ---

If w/OMS 1:

THC +X to TGT HP or TOT AFT QTY 1 [ ][ ][ ] %

At AFT QTY 1 if CUR HP:

THC +X to FLIP HP or TOT AFT QTY 2 [5][3] % then FRCS COMPLETION

FLIP HP [ ][ ] ---

FRCS COMPLETION

AFT HP [ ][ ] ---

THC +X to TGT HP

TGT HP [ ][ ] ---

FRCS COMPLETION:

Mnvr to -X Att (pitch up at 3°/sec to VGOz = +1/4 ΔVTOT)
THC -X to ΔVTOT = 0 or FRCS depletion (JETS FAIL OFF)

CUTOFF
+ :02 OMS ENG – OFF (If < 3 IMU, at [ ]:[ ][ ])
* AFT RCS RECONFIG if INTERCONNECT *
Trim X,Z residuals < 2 fps (< 0.5 fps if shallow)

ASC-8bb/122/A/A

(reduced copy)

AOA
DEORBIT
BURN (RCS)

√MM302 √RCS SEL
√RCS BURN CONFIG (L OMS I'CNCT)

L,R OMS He PRESS/VAP ISOL A (two) – OP
. . . Wait 2 sec . . . B (two) – OP

√DAP – INRTL/DISC
ADI – LVLH(REF)/MED/MED
FLT CNTLR PWR (two) – ON

TIG THC +X
Maintain PITCH ATT ERR ± 3°
Monitor ΔVTOT
RCS I'CNCT TK SW at ΔVTOT = ☐☐☐
R OMS XFEED (two) – OP
L OMS XFEED (two) – CL

OMS PRPLT LOW
AFT RCS RECONFIG AT ΔVTOT = ☐☐☐
RCS COMPLETION

* **OMS PRPLT FAIL (MULTIPLE JETS FAIL OFF):** *
* Secure aff OMS *
* ITEM 18 +0 EXEC *
* [G23] Resel jets *
* Interconnect good OMS to RCS *
* THC +X (√OMS% vs RCS Burn Time) *
* AFT RCS RECONFIG *
* RCS COMPLETION *
* **RCS +X JET FAIL OFF:** *
* ITEM 18 +0 EXEC *
* [G23] Resel jets *

TOP
HINGED AT BOTTOM OF
'AOA DEORBIT BURN (RCS)'
HINGE

RCS COMPLETION:

If DIRECT INSERTION:

THC +X to ΔVTOT = 0 or TOT AFT QTY 1 [ ][ ][ ] %

At AFT QTY 1 if CUR ΔVTOT: THC +X to FLIP ΔV or TOT AFT QTY 2 [5][3] % then FRCS COMPLETION

FLIP ΔV [4][8] FRCS COMPLETION

AFT ΔV [2][9] THC +X to TGT ΔV

TGT ΔV [0][0]

If w/OMS 1:

THC +X to TGT HP or TOT AFT QTY 1 [ ][ ][ ] %

At AFT QTY 1 if CUR HP: THC +X to FLIP HP or TOT AFT QTY 2 [5][3] % then FRCS COMPLETION

FLIP HP [ ][ ] FRCS COMPLETION

AFT HP [ ][ ] THC +X to TGT HP

TGT HP [ ][ ]

FRCS COMPLETION:

Mnvr to -X Att (pitch up at 3°/sec to VGOz = +1/4 ΔVTOT)

THC -X to ΔVTOT = 0 or FRCS depletion (JETS FAIL OFF)

CUTOFF:

VGOx = 0, release THC

AFT RCS RECONFIG

Trim Inplane X,Z residuals < 2 fps (< 0.5 fps if shallow)

ASC-7aa/122/A/A

(reduced copy)

TOP
BACK OF ‘AOA DEORBIT BURN (RCS)’

HOOK VELCRO

HOOK VELCRO

ASC-7b/A/B

HINGE

(reduced copy)

FAB USE ONLY CC 10-18 ASC/122/FIN

TOP
HINGED AT BOTTOM OF
BACK OF 'AOA DEORBIT BURN (RCS)'
HINGE

ASC-7bb/A/B

(reduced copy)

FAB USE ONLY CC 10-19 ASC/122/FIN

TOP

PILE VELCRO | HOOK VELCRO | PILE VELCRO

ZZA TAL REDESIGNATION
(122 OCFR1 CYC)

1st E.O. VI		6000	6100	6200	6300	6400	6500	6600	6700
SE OPS 3 ZZA 109	(4)	10900	11000	11000	11000	11100	11100	11100	11200
SE ZZA 104	(4)	17000	16900	16700	16500	16300	16100	15900	15800

1st E.O. VI		6800	6900	7000	7100	7200	7300	7400	7500
SE OPS 3 ZZA 109	(4)	11200	11200	11300	11300	11300	11400	11400	11400
SE ZZA 104	(4)	15600	15400	15200	15100	14900	14800	14600	14500

1st E.O. VI		7600	7700	7800	7900	8000	8100	8200	8300
SE OPS 3 ZZA 109	(4)	11500	11500	11500	11500	11600	11600	11600	11600
SE ZZA 104	(4)	14400	14300	14100	14000	13900	13900	13800	13700

1st E.O. VI		8400	8500	8600	8700	8800	8900	9000	9100
SE OPS 3 ZZA 109	(4)	11700	11700	11700	11700	11700	11700	11800	11800
SE ZZA 104	(4)	13700	13600	13600	13500	13500	13500	13400	13400

1st E.O. VI		9200	9300	9400	9500	9600	9700	9800	9900
SE OPS 3 ZZA 109	(4)	11800	11800	11800	11800	11800	11800	11900	11900
SE ZZA 104	(4)	13400	13400	13400	13400	13400	13400	13500	13500

1st E.O. VI		10000	10100	10200	10300	10400	10500	10600	
SE OPS 3 ZZA 109	(4)	11900	11900	11900	11900	11900	11900	11900	
SE ZZA 104	(4)	13500	13500	13500	13600	13600	13600	13600	

ASC-9a/122/A/A

PILE VELCRO | HOOK VELCRO | PILE VELCRO

(reduced copy)

FAB USE ONLY CC 10-20 ASC/122/FIN

TOP
BACK OF 'ZZA TAL REDESIGNATION'

HOOK VELCRO | HOOK VELCRO | HOOK VELCRO

ECAL – ZZA or MRN or FMI PRIME TAL

1st EO VI (KFPS)	5.6	5.8	6.0	6.2	6.4	6.6	6.8
CHERRY POINT (7)		6.7 - 7.0	6.7 - 7.2	6.8 - 7.3	6.8 - 7.4	6.9 - 7.5	6.9 - 7.6
OTIS ANGB (16)		10.3 - 11.1	10.3 - 11.2	10.2 - 11.3	10.2 - 11.5	10.2 - 11.6	10.2 - 11.6

1st EO VI (KFPS)	7.0	7.2	7.4	7.6	7.8	8.0	8.2
CHERRY POINT (7)	7.0 - 7.7	7.2 - 7.8	7.4 - 7.9	7.6 - 7.9	7.8 - 8.0	8.0 - 8.0	
GABRESKI (15)					10.5 - 10.7	10.4 - 10.8	10.3 - 11.0
OTIS ANGB (16)	10.2 - 11.7	10.2 - 11.8	10.2 - 11.9	10.2 - 12.0	10.2 - 12.1	10.2 - 12.1	10.3 - 12.2

1st EO VI (KFPS)	8.4	8.6	8.8	9.0	9.2	9.4	9.6
OCEANA NAS (8)		8.6 - 9.0	8.8 - 9.1	9.0 - 9.2	9.2 - 9.3		
WALLOPS (9)				9.4 - 9.6	9.2 - 9.7	9.4 - 9.8	9.6 - 9.8
GABRESKI (15)	10.3 - 11.1	10.3 - 11.2	10.3 - 11.3	10.4 - 11.3	10.4 - 11.4	10.4 - 11.5	10.4 - 11.5
OTIS ANGB (16)	10.3 - 12.3	10.3 - 12.3	10.3 - 12.4	10.4 - 12.4	10.4 - 12.5	10.5 - 12.6	10.5 - 12.6
PEASE INT'L (17)	11.3 - 11.7	11.3 - 11.9	11.3 - 12.0	11.3 - 12.1	11.3 - 12.2	11.3 - 12.2	11.3 - 12.3

1st EO VI (KFPS)	9.8	10.0	10.2	10.4	10.6	10.8	11.0
WALLOPS (9)	9.8 - 9.9						
GABRESKI (15)	10.4 - 11.6	10.5 - 11.7	10.5 - 11.7	10.5 - 11.8	10.6 - 11.8	10.8 - 11.9	11.0 - 11.9
OTIS ANGB (16)	10.5 - 12.7	10.5 - 12.7	10.6 - 12.8	10.6 - 12.8	10.7 - 12.9	10.8 - 12.9	11.0 - 12.9
PEASE INT'L (17)	11.3 - 12.4	11.4 - 12.5	11.4 - 12.5	11.5 -12.6	11.5 - 12.6	11.5 - 12.7	11.5 - 12.7

1st EO VI (KFPS)	11.2	11.4	11.6	11.8	12.0	12.2	12.4
GABRESKI (15)	11.2 - 12.0	11.4 -12.0	11.6 - 12.1	11.8 - 12.2	12.0 - 12.2	12.2 - 12.3	
OTIS ANGB (16)	11.2 - 13.0	11.4 - 13.0	11.6 - 13.1	11.8 - 13.1	12.0 - 13.2	12.2 - 13.2	12.4 - 13.2
PEASE INT'L (17)	11.5 - 12.8	11.5 - 12.8	11.6 - 12.9	11.8 - 12.9	12.0 - 13.0	12.2 - 13.0	12.4 - 13.0

1st EO VI (KFPS)	12.6	12.8	13.0	13.2	13.4	13.6	13.8
OTIS ANGB (16)	12.6 - 13.3	12.8 - 13.3	13.0 - 13.4	13.2 - 13.4	13.4 - 13.4		
PEASE INT'L (17)	12.6 - 13.1	12.8 - 13.1	13.0 - 13.1				

ASC-9b/122/A/A

HOOK VELCRO | HOOK VELCRO | HOOK VELCRO

(reduced copy)

FAB USE ONLY CC 10-21 ASC/122/FIN

TOP

PILE VELCRO | HOOK VELCRO | PILE VELCRO

MRN TAL REDESIGNATION
(122 OCFR1 CYC)

1st E.O. VI		5900	6000	6100	6200	6300	6400	6500	6600
SE OPS 3 MRN 109	(3)	10900	11000	11000	11000	11100	11100	11100	11100
SE MRN 104	(3)	16800	16700	16500	16300	16100	15900	15800	15600

1st E.O. VI		6700	6800	6900	7000	7100	7200	7300	7400
SE OPS 3 MRN 109	(3)	11200	11200	11200	11200	11300	11300	11300	11300
SE MRN 104	(3)	15400	15300	15100	15000	14800	14700	14500	14400

1st E.O. VI		7500	7600	7700	7800	7900	8000	8100	8200
SE OPS 3 MRN 109	(3)	11400	11400	11400	11400	11500	11500	11500	11500
SE MRN 104	(3)	14300	14200	14000	13900	13800	13800	13700	13600

1st E.O. VI		8300	8400	8500	8600	8700	8800	8900	9000
SE OPS 3 MRN 109	(3)	11500	11600	11600	11600	11600	11600	11700	11700
SE MRN 104	(3)	13600	13500	13500	13400	13400	13400	13300	13300

1st E.O. VI		9100	9200	9300	9400	9500	9600	9700	9800
SE OPS 3 MRN 109	(3)	11700	11700	11700	11800	11800	11800	11800	11800
SE MRN 104	(3)	13300	13300	13300	13300	13300	13300	13300	13400

1st E.O. VI		9900	10000	10100	10200	10300	10400	10500	10600
SE OPS 3 MRN 109	(3)	11800	11800	11900	11900	11900	11900	11900	11900
SE MRN 104	(3)	13400	13400	13400	13400	13500	13500	13500	13500

ASC-10a/122/A/A

PILE VELCRO | HOOK VELCRO | PILE VELCRO

(reduced copy)

TOP
BACK OF 'MRN TAL REDESIGNATION'

HOOK VELCRO | HOOK VELCRO | HOOK VELCRO

ECAL – ZZA or MRN or FMI PRIME TAL

1st EO VI (KFPS)	5.6	5.8	6.0	6.2	6.4	6.6	6.8
CHERRY POINT (7)		6.7 - 7.0	6.7 - 7.2	6.8 - 7.3	6.8 - 7.4	6.9 - 7.5	6.9 - 7.6
OTIS ANGB (16)		10.3 - 11.1	10.3 - 11.2	10.2 - 11.3	10.2 - 11.5	10.2 - 11.6	10.2 - 11.6

1st EO VI (KFPS)	7.0	7.2	7.4	7.6	7.8	8.0	8.2
CHERRY POINT (7)	7.0 - 7.7	7.2 - 7.8	7.4 - 7.9	7.6 - 7.9	7.8 - 8.0	8.0 - 8.0	
GABRESKI (15)					10.5 - 10.7	10.4 - 10.8	10.3 - 11.0
OTIS ANGB (16)	10.2 - 11.7	10.2 - 11.8	10.2 - 11.9	10.2 - 12.0	10.2 - 12.1	10.2 - 12.1	10.3 - 12.2

1st EO VI (KFPS)	8.4	8.6	8.8	9.0	9.2	9.4	9.6
OCEANA NAS (8)		8.6 - 9.0	8.8 - 9.1	9.0 - 9.2	9.2 - 9.3		
WALLOPS (9)				9.4 - 9.6	9.2 - 9.7	9.4 - 9.8	9.6 - 9.8
GABRESKI (15)	10.3 - 11.1	10.3 - 11.2	10.3 - 11.3	10.4 - 11.3	10.4 - 11.4	10.4 - 11.5	10.4 - 11.5
OTIS ANGB (16)	10.3 - 12.3	10.3 - 12.3	10.3 - 12.4	10.4 - 12.4	10.4 - 12.5	10.5 - 12.6	10.5 - 12.6
PEASE INT'L (17)	11.3 - 11.7	11.3 - 11.9	11.3 - 12.0	11.3 - 12.1	11.3 - 12.2	11.3 - 12.2	11.3 - 12.3

1st EO VI (KFPS)	9.8	10.0	10.2	10.4	10.6	10.8	11.0
WALLOPS (9)	9.8 - 9.9						
GABRESKI (15)	10.4 - 11.6	10.5 - 11.7	10.5 - 11.7	10.5 - 11.8	10.6 - 11.8	10.8 - 11.9	11.0 - 11.9
OTIS ANGB (16)	10.5 - 12.7	10.5 - 12.7	10.6 - 12.8	10.6 - 12.8	10.7 - 12.9	10.8 - 12.9	11.0 - 12.9
PEASE INT'L (17)	11.3 - 12.4	11.4 - 12.5	11.4 - 12.5	11.5 -12.6	11.5 - 12.6	11.5 - 12.7	11.5 - 12.7

1st EO VI (KFPS)	11.2	11.4	11.6	11.8	12.0	12.2	12.4
GABRESKI (15)	11.2 - 12.0	11.4 -12.0	11.6 - 12.1	11.8 - 12.2	12.0 - 12.2	12.2 - 12.3	
OTIS ANGB (16)	11.2 - 13.0	11.4 - 13.0	11.6 - 13.1	11.8 - 13.1	12.0 - 13.2	12.2 - 13.2	12.4 - 13.2
PEASE INT'L (17)	11.5 - 12.8	11.5 - 12.8	11.6 - 12.9	11.8 - 12.9	12.0 - 13.0	12.2 - 13.0	12.4 - 13.0

1st EO VI (KFPS)	12.6	12.8	13.0	13.2	13.4	13.6	13.8
OTIS ANGB (16)	12.6 - 13.3	12.8 - 13.3	13.0 - 13.4	13.2 - 13.4	13.4 - 13.4		
PEASE INT'L (17)	12.6 - 13.1	12.8 - 13.1	13.0 - 13.1				

ASC-10b/122/A/A

HOOK VELCRO | HOOK VELCRO | HOOK VELCRO

(reduced copy)

FAB USE ONLY CC 10-23 ASC/122/FIN

TOP

PILE VELCRO

HOOK VELCRO

PILE VELCRO

FMI TAL REDESIGNATION
(122 OCFR1 CYC)

1st E.O. VI		6200	6300	6400	6500	6600	6700	6800	6900
SE OPS 3 FMI 109	(29)	11000	11100	11100	11100	11200	11200	11200	11200
SE FMI 104	(29)	17700	17500	17300	17100	16900	16700	16500	16300

1st E.O. VI		7000	7100	7200	7300	7400	7500	7600	7700
SE OPS 3 FMI 109	(29)	11300	11300	11300	11300	11400	11400	11400	11400
SE FMI 104	(29)	16100	15900	15800	15600	15400	15300	15100	14900

1st E.O. VI		7800	7900	8000	8100	8200	8300	8400	8500
SE OPS 3 FMI 109	(29)	11500	11500	11500	11500	11600	11600	11600	11600
SE FMI 104	(29)	14800	14700	14600	14400	14300	14200	14200	14100

1st E.O. VI		8600	8700	8800	8900	9000	9100	9200	9300
SE OPS 3 FMI 109	(29)	11600	11700	11700	11700	11700	11700	11700	11800
SE FMI 104	(29)	14000	14000	13900	13900	13800	13800	13800	13800

1st E.O. VI		9400	9500	9600	9700	9800	9900	10000	10100
SE OPS 3 FMI 109	(29)	11800	11800	11800	11800	11800	11800	11900	11900
SE FMI 104	(29)	13800	13800	13800	13800	13800	13800	13800	13800

1st E.O. VI		10200	10300	10400	10500	10600			
SE OPS 3 FMI 109	(29)	11900	11900	11900	11900	11900			
SE FMI 104	(29)	13800	13900	13900	13900	13900			

ASC-12a/122/A/A

PILE VELCRO

HOOK VELCRO

PILE VELCRO

(reduced copy)

TOP
BACK OF 'FMI TAL REDESIGNATION'

HOOK VELCRO | HOOK VELCRO | HOOK VELCRO

ECAL – ZZA or MRN or FMI PRIME TAL

1st EO VI (KFPS)	5.6	5.8	6.0	6.2	6.4	6.6	6.8
CHERRY POINT (7)		6.7 - 7.0	6.7 - 7.2	6.8 - 7.3	6.8 - 7.4	6.9 - 7.5	6.9 - 7.6
OTIS ANGB (16)		10.3 - 11.1	10.3 - 11.2	10.2 - 11.3	10.2 - 11.5	10.2 - 11.6	10.2 - 11.6

1st EO VI (KFPS)	7.0	7.2	7.4	7.6	7.8	8.0	8.2
CHERRY POINT (7)	7.0 - 7.7	7.2 - 7.8	7.4 - 7.9	7.6 - 7.9	7.8 - 8.0	8.0 - 8.0	
GABRESKI (15)					10.5 - 10.7	10.4 - 10.8	10.3 - 11.0
OTIS ANGB (16)	10.2 - 11.7	10.2 - 11.8	10.2 - 11.9	10.2 - 12.0	10.2 - 12.1	10.2 - 12.1	10.3 - 12.2

1st EO VI (KFPS)	8.4	8.6	8.8	9.0	9.2	9.4	9.6
OCEANA NAS (8)		8.6 - 9.0	8.8 - 9.1	9.0 - 9.2	9.2 - 9.3		
WALLOPS (9)				9.4 - 9.6	9.2 - 9.7	9.4 - 9.8	9.6 - 9.8
GABRESKI (15)	10.3 - 11.1	10.3 - 11.2	10.3 - 11.3	10.4 - 11.3	10.4 - 11.4	10.4 - 11.5	10.4 - 11.5
OTIS ANGB (16)	10.3 - 12.3	10.3 - 12.3	10.3 - 12.4	10.4 - 12.4	10.4 - 12.5	10.5 - 12.6	10.5 - 12.6
PEASE INT'L (17)	11.3 - 11.7	11.3 - 11.9	11.3 - 12.0	11.3 - 12.1	11.3 - 12.2	11.3 - 12.2	11.3 - 12.3

1st EO VI (KFPS)	9.8	10.0	10.2	10.4	10.6	10.8	11.0
WALLOPS (9)	9.8 - 9.9						
GABRESKI (15)	10.4 - 11.6	10.5 - 11.7	10.5 - 11.7	10.5 - 11.8	10.6 - 11.8	10.8 - 11.9	11.0 - 11.9
OTIS ANGB (16)	10.5 - 12.7	10.5 - 12.7	10.6 - 12.8	10.6 - 12.8	10.7 - 12.9	10.8 - 12.9	11.0 - 12.9
PEASE INT'L (17)	11.3 - 12.4	11.4 - 12.5	11.4 - 12.5	11.5 -12.6	11.5 - 12.6	11.5 - 12.7	11.5 - 12.7

1st EO VI (KFPS)	11.2	11.4	11.6	11.8	12.0	12.2	12.4
GABRESKI (15)	11.2 - 12.0	11.4 -12.0	11.6 - 12.1	11.8 - 12.2	12.0 - 12.2	12.2 - 12.3	
OTIS ANGB (16)	11.2 - 13.0	11.4 - 13.0	11.6 - 13.1	11.8 - 13.1	12.0 - 13.2	12.2 - 13.2	12.4 - 13.2
PEASE INT'L (17)	11.5 - 12.8	11.5 - 12.8	11.6 - 12.9	11.8 - 12.9	12.0 - 13.0	12.2 - 13.0	12.4 - 13.0

1st EO VI (KFPS)	12.6	12.8	13.0	13.2	13.4	13.6	13.8
OTIS ANGB (16)	12.6 - 13.3	12.8 - 13.3	13.0 - 13.4	13.2 - 13.4	13.4 - 13.4		
PEASE INT'L (17)	12.6 - 13.1	12.8 - 13.1	13.0 - 13.1				

ASC-12b/122/A/A

HOOK VELCRO | HOOK VELCRO | HOOK VELCRO

(reduced copy)

FAB USE ONLY CC 10-25 ASC/122/FIN

TOP

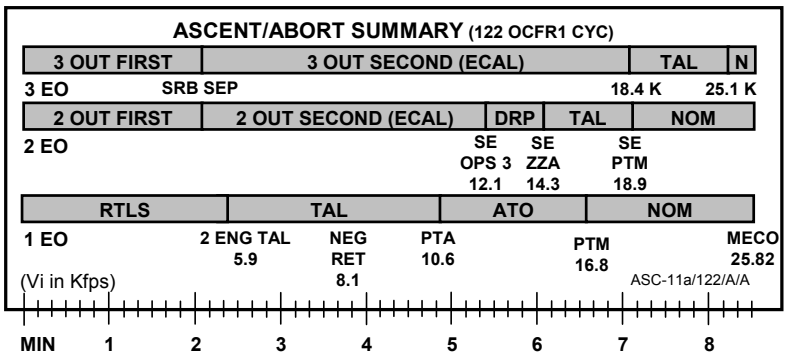

TOP
BACK OF 'ASCENT/ABORT SUMMARY'

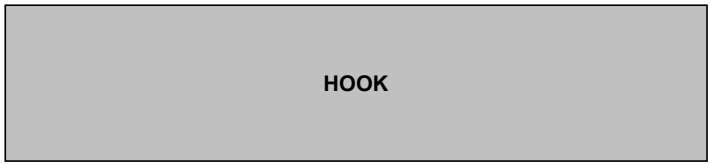

ASC-11b/A/C

(reduced copy)

FAB USE ONLY CC 10-26 ASC/122/FIN

TOP

EMERGENCY EGRESS

HOOK VELCRO

PRELAUNCH MODE 1

- TABS – RELEASE
- VISOR – CLOSE / LOCK
- SUIT O2 – ON
- GREEN APPLE – PULL
- KNEEBOARDS – REMOVE
- COOLING – DISCONNECT
- SEAT RESTRAINT – RELEASE
- PARACHUTE (four) – RELEASE
- COMM – DISCONNECT
- SUIT O2 – DISCONNECT
- EGRESS SEAT
- HATCH – OPEN MANUALLY
- SLIDEWIRE BASKETS

POST LANDING MODE 5

- TABS – RELEASE
- VISOR – CLOSE / LOCK
- SUIT O2 – ON
- GREEN APPLE – PULL
- KNEEBOARDS – REMOVE
- COOLING – DISCONNECT
- SEAT RESTRAINT – RELEASE
- PARACHUTE (four) – RELEASE
- COMM – DISCONNECT
- (G-SUIT CLIP – PULL)
- SUIT O2 – DISCONNECT
- PLT – EMER PWR DOWN
- EGRESS SEAT
- SLIDE/ESCAPE PANEL

BAILOUT MODE 8

- REPORT POSITION
- √MACH < 1.0
- P, R/Y – CSS
- OPS 305/603 PRO (if reqd)
- SB – AUTO; BF – AUTO
- FLY 185-195 KEAS, $\Phi = 0°$
- ABORT MODE – ATO
- ABORT PBI – PUSH
- P,R/Y – AUTO
- FLT CNTLR PWR (two) – OFF

~50K FT

- TABS – RELEASE
- VISOR – CLOSE / LOCK
- SUIT O2 – ON
- GREEN APPLE – PULL

~40K FT

- MS3 – VENT CABIN
- CDR,PLT SEATS – LOWER
- KNEEBOARDS – REMOVE
- COOLING – DISCONNECT
- SEAT RESTRAINT – RELEASE
- D-RING – UNCOVER

~30K FT

- MS3 – JETTISON HATCH
- COMM – DISCONNECT
- (G-SUIT CLIP – PULL)
- SUIT O2 – DISCONNECT
- EGRESS SEAT
- POLE – DEPLOY
- D-RING – HOOK UP
- BAILOUT

HOOK VELCRO

ASC-15a/A,E/I

"ACES TROUBLESHOOTING" on reverse side

(reduced copy)

FAB USE ONLY CC 10-27 ASC/122/FIN

TOP
BACK OF "EMERGENCY EGRESS"

H O O K V E L C R O

ACES TROUBLESHOOTING (ASCENT/ENTRY)

LOSS OF COMM

If LOSS OF XMIT:

NOTE

O2 helmet flow automutes microphones (i.e., inhalation, open or leaking visor, leaking neck dam)

1. √TABS – IN
2. √Helmet pressure visor seal not obstructed
3. √MIC placement
4. √CCU PWR – ON

POWER BUS	ATU
ESS BUS 1BC	CDR
ESS BUS 2CA	PLT
MNA	MS STATION
MNB	MIDDECK
MNC	PS STATION

If LOSS OF RECEIVE:

5. HIU VOL – MAX
6. √All cable connections mated properly:
   - CCA-to-Helmet I/F cable
   - Comm pigtail
   - HIU
   - Comm panel
7. √ATU Config (Flight Deck as applicable):
   - A/G1, A/G2, A/A, ICOM A, ICOM B – T/R
   - MODE – PTT/VOX
   - VOX SENS – 2-4
   - A/G1, A/G2 tw – 9
   - A/A, ICOM A, ICOM B tw – 5

LOSS OF SUIT PRESSURE

1. √TABS – IN
2. √VISOR – CLOSED/LOCKED
3. √Helmet properly attached
4. √Gloves properly attached
5. √BIP plug secured
6. √Suit zipper fully zipped

LOSS OF SUIT O2

1. √O2 hose connected to ACES O2 manifold
2. √LEH O2 vlv – OP (Flight Deck)
3. √O2 hose connected properly at LEH O2 (Flight Deck)

INADVERTENT EOS ACTIVATION (After T-2:00)

1. Remain on shuttle LEH O2
2. Keep visor closed and locked through MECO

NOTE

Prior to opening visor, disconnect EOS O2 line (with locking collar clip) from O2 manifold to prevent EOS O2 flow

C6

ASC-15b/A,E/E

H O O K V E L C R O

(reduced copy)

FAB USE ONLY CC 10-28 ASC/122/FIN

TOP

ESCAPE PANEL EGRESS

CLEAR WINDOW

√TABS / VISOR / GREEN APPLE

PULL PANEL JETT HANDLE

PRYBAR/VENT – IF REQD

PLT – EMERGENCY POWERDOWN

DEPLOY & ATTACH SKY GENIE

EGRESS

ASC-16a/A,E/D

TOP
BACK OF 'ESCAPE PANEL EGRESS'

HOOK
VELCRO

ASC-16b/A,E/C

(reduced copy)

FAB USE ONLY CC 10-29 ASC/122/FIN

GPC/FCS CHANNEL CONFIGURATION

TOP

GPC

<table>
<tr><td>G
P
C</td><td>G
P
C</td><td>G
P
C</td><td>G
P
C</td><td rowspan="2">ASC-17a/
A,O,E/B</td></tr>
<tr><td colspan="4">Delay 2 sec between each switch throw (AUTO ⇆ ORIDE)</td></tr>
</table>

TOP
BACK OF ‘GPC’

<table>
<tr><td>ASC-17b/
A,O,E/B</td><td>HOOK VELCRO</td></tr>
</table>

<u>Fabrication Notes</u>

1. Cut to exact outside edge
2. Cover GPC boxes with Scotch tape

(reduced copy)

FAB USE ONLY CC 10-30 ASC/122/FIN

TOP
PANEL R14 – OV104 ONLY

OV104 ONLY

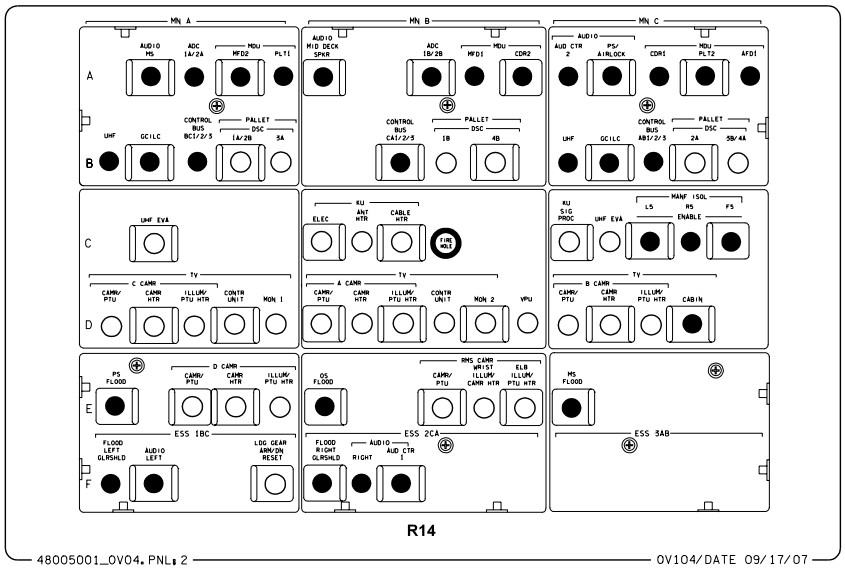

ASC-22a/A,O,E/D

(reduced copy)

FAB USE ONLY CC 10-31 ASC/122/FIN

TOP
BACK OF 'PANEL R14 – OV104 ONLY'

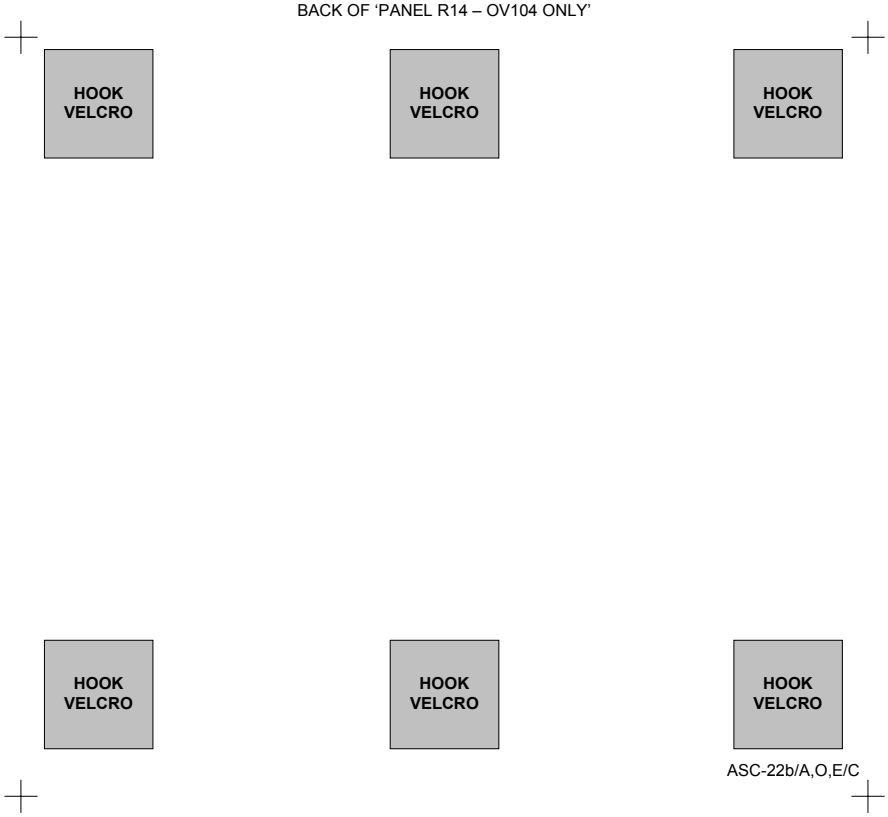

ASC-22b/A,O,E/C

(reduced copy)

FAB USE ONLY CC 10-32 ASC/122/FIN

TOP

LOC/BREAK-UP

BEFORE 'GO AT THROTTLEUP'

- GREEN APPLE
  LOCK INERTIA REEL
- JETTISON HATCH
- BAILOUT
- PULL RIP CORD

'GO AT THROTTLEUP' TO SRB SEP

- GREEN APPLE
  LOCK INERTIA REEL
- VENT
- 'G' SPIKE
- JETTISON HATCH

√ALT/SUIT

- BAILOUT (BELOW 40 K)
- PULL RIP CORD

AFTER SRB SEP

√TABS/VISOR/GREEN APPLE
LOCK INERTIA REEL

- GO TO MIDDECK
- VENT
- 'G' SPIKE
- JETTISON HATCH

√ALT/SUIT

- BAILOUT (BELOW 40 K)
- PULL RIP CORD

ASC-21a/A/D

NOTE: This crew kneeboard card is optional and has no back facing

(reduced copy)

TOP

HOOK VELCRO

EMERGENCY EGRESS

NOTE
'LOSS OF COMM TROUBLESHOOTING' ON REVERSE SIDE

HOOK VELCRO

PRELAUNCH MODE 1

TABS – RELEASE
VISOR – CLOSE / LOCK
SUIT O2 – ON
GREEN APPLE – PULL
KNEEBOARDS – REMOVE
COOLING – DISCONNECT
SEAT RESTRAINT – RELEASE
PARACHUTE (four) – RELEASE
COMM – DISCONNECT
SUIT O2 – DISCONNECT
EGRESS SEAT
HATCH – OPEN MANUALLY
SLIDEWIRE BASKETS

BAILOUT MODE 8

REPORT POSITION
√MACH < 1.0
P,R/Y – CSS
OPS 305/603 PRO (if reqd)
SB – AUTO; BF – AUTO
FLY 185-195 KEAS, Φ = 0°
ABORT MODE – ATO
ABORT PBI – PUSH
P,R/Y – AUTO
FLT CNTLR PWR (two) – OFF

~50K FT

TABS – RELEASE
VISOR – CLOSE / LOCK
SUIT O2 – ON
GREEN APPLE – PULL

ASC-25a/A,E/G

HINGE

TOP, HINGED AT BOTTOM OF 'EMERGENCY EGRESS'
HINGE

POST LANDING
MODE 5

TABS – RELEASE
VISOR – CLOSE / LOCK
SUIT O2 – ON
GREEN APPLE – PULL
KNEEBOARDS – REMOVE
COOLING – DISCONNECT
SEAT RESTRAINT – RELEASE
PARACHUTE (four) – RELEASE
COMM – DISCONNECT
(G-SUIT CLIP – PULL)
SUIT O2 – DISCONNECT
PLT – EMER PWR DOWN
EGRESS SEAT
SLIDE/ESCAPE PANEL

~40K FT

MS3 – VENT CABIN
CDR,PLT SEATS – LOWER
KNEEBOARDS – REMOVE
COOLING – DISCONNECT
SEAT RESTRAINT – RELEASE
D-RING – UNCOVER

~30K FT

MS3 – JETTISON HATCH
COMM – DISCONNECT
(G-SUIT CLIP – PULL)
SUIT O2 – DISCONNECT
EGRESS SEAT
POLE – DEPLOY
D-RING – HOOK UP
BAILOUT

ASC-25aa/A,E/E

PILE VELCRO

NOTE
'SUIT PRESS AND O2, EOS ACTIVATION TROUBLESHOOTING' ON REVERSE SIDE

PILE VELCRO

FAB USE ONLY (reduced copy) CC 10-35 ASC/122/FIN

TOP
BACK OF 'EMERGENCY EGRESS' HEAD TO TOE

HOOK VELCRO

ACES TROUBLESHOOTING (ASCENT/ENTRY)

LOSS OF COMM

If LOSS OF XMIT:

NOTE

O2 helmet flow automutes microphones (i.e., inhalation, open or leaking visor, leaking neck dam)

1. √TABS – IN
2. √Helmet pressure visor seal not obstructed
3. √MIC placement
4. √CCU PWR – ON

POWER BUS	ATU
ESS BUS 1BC	R14 CDR
ESS BUS 2CA	R14 PLT
MNA	R14 MS STATION
MNB	R14 MIDDECK
MNC	R14 PS STATION

If LOSS OF RECEIVE:

5. HIU VOL – MAX
6. √All cable connections mated properly:
   CCA-to-Helmet I/F cable
   Comm pigtail
   HIU
   Comm panel
7. √ATU Config (Flight Deck as applicable):
   A/G1, A/G2, A/A, ICOM A, ICOM B – T/R
   MODE – PTT/VOX
   VOX SENS – 2-4
   A/G1, A/G2 tw – 9
   A/A, ICOM A, ICOM B tw – 5

HOOK VELCRO

HOOK VELCRO

ASC-25b/A,E/D

HOOK VELCRO

HINGE

BACK, HINGED HEAD TO TOE AT BOTTOM OF POST LANDING PORTION OF 'EMERGENCY EGRESS'
HINGE

PILE VELCRO

PILE VELCRO

HOOK VELCRO

HOOK VELCRO

LOSS OF SUIT PRESSURE

1. √TABS – IN
2. √VISOR – CLOSED/LOCKED
3. √Helmet properly attached
4. √Gloves properly attached
5. √BIP plug secured
6. √Suit zipper fully zipped

LOSS OF SUIT O2

1. √O2 hose connected to ACES O2 manifold
C6 2. √LEH O2 vlv – OP (Flight Deck)
3. √O2 hose connected properly at LEH O2 (Flight Deck)

INADVERTENT EOS ACTIVATION (After T-2:00)

1. Remain on shuttle LEH O2
2. Keep visor closed and locked through MECO

NOTE

Prior to opening visor, disconnect EOS O2 line (with locking collar clip) from O2 manifold to prevent EOS O2 flow

ASC-25bb/A,E/D

BOTTOM
BACK/TOP OF 'EMERGENCY EGRESS'

ВЕРХ

HOOK VELCRO

АВАРИЙНОЕ ПОКИДАНИЕ

ПРИМЕЧАНИЕ
"УСТРАНЕНИЕ НЕИСПРАВНОСТЕЙ ПРИ ПОТЕРЕ СВЯЗИ"
НА ОБРАТНОЙ СТОРОНЕ

HOOK VELCRO

РЕЖИМ 1
ДО СТАРТА

ЯЗЫЧКИ ШЕЙНОЙ ПРОКЛАДКИ - УБРАТЬ

ШЛЕМ - ОПУСТИТЬ/ ЗАКРЫТЬ

СК О2 - ВКЛ

ЗЕЛЕНЫЙ ШАРИК - ПОТЯНУТЬ

НАКОЛЕННЫЕ ПЛАНШЕТЫ - УБРАТЬ

СИСТЕМУ ОХЛАЖДЕНИЯ - ОТСОЕДИНИТЬ

ПРИВЯЗНЫЕ РЕМНИ КРЕСЛА - ОСВОБОДИТЬ

ПАРАШЮТ (четыре) - ОТСТЕГНУТЬ

СВЯЗЬ - ОТСОЕДИНИТЬ

СК О2 - ОТСОЕДИНИТЬ

ПОКИНУТЬ КРЕСЛО

ЛЮК – ОТКРЫТЬ ВРУЧНУЮ

ИСПОЛЬЗОВАТЬ ЛЮЛЬКУ ДЛЯ СПУСКА

РЕЖИМ 8
АВАРИЙНОЕ ДЕСАНТИРОВАНИЕ

СООБЩИТЬ ПОЛОЖЕНИЕ

√ЧИСЛО МАХА < 1,0

ТАНГАЖ, РЫСКАНИЕ/КРЕН - CSS

OPS 305/603 PRO (если необходимо)

А/Д ТОРМОЗ - АВТО; ПОСАД. ЩИТОК - АВТО

ВЫБРАТЬ СКОРОСТЬ 185-195 KEAS, $\Phi = 0°$

ABORT MODE - АТО

КН ABORT - НАЖАТЬ

ТАНГАЖ, РЫСКАНИЕ/КРЕН - АВТО

ТМБ FLT CNTLR PWR (два) - ВЫКЛ

~50 ТЫСЯЧ ФУТОВ

ЯЗЫЧКИ ШЕЙНОЙ ПРОКЛАДКИ - УБРАТЬ

ШЛЕМ - ОПУСТИТЬ/ ЗАКРЫТЬ

СК О2 - ВКЛ

ЗЕЛЕНЫЙ ШАРИК - ПОТЯНУТЬ

ASC-26a/A,E/E

HINGE

TOP, HINGED AT BOTTOM OF 'EMERGENCY EGRESS'
HINGE

РЕЖИМ 5
ПОСЛЕ ПОСАДКИ

ЯЗЫЧКИ ШЕЙНОЙ ПРОКЛАДКИ - УБРАТЬ

ШЛЕМ - ОПУСТИТЬ/ ЗАКРЫТЬ

СК О2 - ВКЛ

ЗЕЛЕНЫЙ ШАРИК - ПОТЯНУТЬ

НАКОЛЕННЫЕ ПЛАНШЕТЫ - УБРАТЬ

СИСТЕМУ ОХЛАЖДЕНИЯ - ОТСОЕДИНИТЬ

ПРИВЯЗНЫЕ РЕМНИ КРЕСЛА - ОСВОБОДИТЬ

ПАРАШЮТ (четыре) - ОТСТЕГНУТЬ

СВЯЗЬ - ОТСОЕДИНИТЬ

(СНЯТЬ КОНТРОВКУ С КЛАПАНА ППК)

СК О2 - ОТСОЕДИНИТЬ

ПИЛОТ – ЭКСТРЕННО ОТКЛЮЧИТЬ ПИТАНИЕ

ПОКИНУТЬ КРЕСЛО

ИСПОЛЬЗОВАТЬ СКЛИЗ/ВЫХОДНУЮ ПАНЕЛЬ

~40 ТЫСЯЧ ФУТОВ

MS3 - СБРОСИТЬ ДАВЛЕНИЕ В КАБИНЕ

КРЕСЛА КЭ И ПИЛОТА - ВНИЗ

НАКОЛЕННЫЕ ПЛАНШЕТЫ - УБРАТЬ

СИСТЕМУ ОХЛАЖДЕНИЯ - ОТСОЕДИНИТЬ

ПРИВЯЗНЫЕ РЕМНИ КРЕСЛА - ОСВОБОДИТЬ

D-ОБРАЗНОЕ КОЛЬЦО - НАЙТИ

~30 ТЫСЯЧ ФУТОВ

MS3 - ОТСТРЕЛИТЬ ЛЮК

СВЯЗЬ - ОТСОЕДИНИТЬ

(СНЯТЬ КОНТРОВКУ С КЛАПАНА ППК)

СК О2 - ОТСОЕДИНИТЬ

ПОКИНУТЬ КРЕСЛО

РАЗЛОЖИТЬ НАПРАВЛЯЮЩУЮ ШТАНГУ

D-ОБРАЗНОЕ КОЛЬЦО - ПРИСТЕГНУТЬ

ПОКИНУТЬ КОРАБЛЬ

ASC-26aa/A,E/D

PILE VELCRO

ПРИМЕЧАНИЕ
"УСТРАНЕНИЕ НЕИСПРАВНОСТЕЙ ПРИ ПОТЕРЕ ДАВЛЕНИЯ В СК, ПОДАЧЕ О2 И ВКЛЮЧЕНИИ СИСТЕМЫ EOS"
НА ОБРАТНОЙ СТОРОНЕ

PILE VELCRO

HOOK VELCRO

УСТРАНЕНИЕ НЕИСПРАВНОСТЕЙ СК ACES (ВЫВЕДЕНИЕ/СПУСК)

ПОТЕРЯ СВЯЗИ

ЕСЛИ ПОТЕРЯ СВЯЗИ В РЕЖИМЕ ПЕРЕДАЧИ:

ПРИМЕЧАНИЕ

Поток O2 в шлеме загл микрофоны (т.е. дыхание, откр или негерм смотр щиток, негерм шейная прокладка)

1. √Язычки шейной прокладки – IN (убраны)
2. √Гермоуплотнение смотр щитка шлема - свободно
3. √Размещение микрофона
4. √ПИТАНИЕ CCU – ON (Вкл)

ШИНА ПИТАНИЯ	БЛОК ATU
ESS BUS 1BC	R14 CDR
ESS BUS 2CA	R14 PLT
MNA	R14 MS STATION
MNB	R14 MIDDECK
MNC	R14 PS STATION

ЕСЛИ ПОТЕРЯ СВЯЗИ В РЕЖИМЕ ПРИЕМА:

5. HIU VOL – MAX (Громкость на HIU - максимум)
6. √Все кабели пристыкованы правильно:
   - Интерфейсный кабель CCA-to-Helmet
   - Короткий конец кабеля связи
   - HIU (Устройство сопряжения с гарнитурой)
   - Пульт связи
7. √Конфигурация ATU (Полетная палуба, как предписано):
   - A/G1, A/G2, A/A, ICOM A, ICOM B – T/R (ПРД/ПРМ)
   - MODE – PTT/VOX
   - VOX SENS – 2-4
   - A/G1, A/G2 диск перекл – 9
   - A/A, ICOM A, ICOM B диск перекл – 5

HOOK VELCRO

HOOK VELCRO

ASC-26b/A,E/D

HOOK VELCRO

HINGE

BACK, HINGED HEAD TO TOE AT BOTTOM OF POST LANDING PORTION OF 'EMERGENCY EGRESS'
HINGE

PILE VELCRO

PILE VELCRO

HOOK VELCRO

HOOK VELCRO

C6

ПОТЕРЯ ДАВЛЕНИЯ В СК

1. √Язычки шейной прокладки – IN (убраны)
2. √СМОТР ЩИТОК – ОПУСТИТЬ/ЗАКРЫТЬ
3. √Шлем подстыкован правильно
4. √Перчатки подстыкованы правильно
5. √Вилка питания аппаратуры BIP - закреплена
6. √Замок-молния СК - застегнута до конца

ПОТЕРЯ ПОДАЧИ O2 В СК

1. √Шланг O2 подстыкован к магистрали O2 СК ACES
2. √кл LEH O2 – OP (Откр) (Полетная палуба)
3. √Шланг O2 подстыкован правильно на LEH O2 (Полетная палуба)

НЕПРЕДНАМЕРЕННОЕ ВКЛЮЧЕНИЕ СИСТЕМЫ EOS
(Через T-2:00)

1. Оставаться на LEH O2 Шаттла
2. Держать смотр щиток опущенным и закрытым, включая этап MECO

ПРИМЕЧАНИЕ

Перед открытием смотр щитка, отсоединить линию O2 системы EOS (контровка) от магистрали O2 с целью предотвращения потока O2 из EOS

ASC-26bb/A,E/D

НИЗ
ОБРАТНАЯ СТОРОНА/ВЕРХ КАРТОЧКИ "АВАРИЙНОЕ ПОКИДАНИЕ"

FAB USE ONLY

(reduced copy)

CC 10-41

ASC/122/FIN

This Page Intentionally Blank

Space Shuttle Program
FLIGHT DATA FILE

JSC-48005-122
FINAL

ASCENT CHECKLIST

STS
122

Flight Cover (trim bottom to expose tabs)