Space Shuttle Program
FLIGHT DATA FILE

JSC-48072-120

Rendezvous

STS-120

Mission Operations Directorate
Flight Design and Dynamics Division

Final
August 23, 2007

National Aeronautics and
Space Administration

Lyndon B. Johnson Space Center
Houston, Texas

Verify this is the correct version for the pending operation (training, simulation or flight).
Electronic copies of FDF books are available. URL: http://mod.jsc.nasa.gov/do3/FDF/index.html

RENDEZVOUS STS-120	FINAL (Aug 23, 2007)

PCN-1 (Oct 1, 2007) Sheet 1 of 1

List of Implemented Change Requests (482s):

RNDZ-1278
RNDZ-1279
RNDZ-1280
RNDZ-1281

Incorporate the following:

1. Replace v thru viii
2. Replace 2-5 thru 2-8
3. Replace 4-11 thru 4-14, 4-17 thru 4-22
4. Replace 8-25 & 8-26
5. Replace CC 9-11 & CC 9-12, CC 9-15 & CC 9-16, CC 9-27 & CC 9-28

Prepared by: _____
Book Manager

Approved by: _____ 9-28-07
Lead, Rendezvous Guidance and Procedures Group

Accepted by: _____ 10/1/07
Chief, Orbit Dynamics Branch

Encl: 26 pages

File this PCN immediately behind the front cover as a permanent record

MISSION OPERATIONS DIRECTORATE

RENDEZVOUS
STS-120

FINAL
August 23, 2007

PREPARED BY:

Jose Ruiz
Book Manager

APPROVED BY:

Sarah Grayhead FOR
Steve R. Walker
Lead, Rendezvous Guidance and Procedure Group

ACCEPTED BY:

R. T. Gavin
Chief, Orbit Dynamics Branch

This document is under the configuration control of the Crew Procedures Control Board (CPCB). All proposed changes must be submitted via FDF Workflow Crew Procedure Change Request (CR) to DO3/FDF Manager.

Additional distribution of this book, for official use only, may be requested in writing to DO3/PMO Administrator. The request must include justification and requester's name, organization, position, and phone number. Contractor requests are made through the NASA or DOD organization supported. Deletions, reduction in quantity, or change of address may be submitted to DO3/FDF Management Office, 281-244-1184.

Incorporates the following:		
482#:	RNDZ-1253	RNDZ-1271
	RNDZ-1258A	RNDZ-1272
	RNDZ-1259A	RNDZ-1273
	RNDZ-1260	RNDZ-1274
	RNDZ-1261	RNDZ-1275
	RNDZ-1262	RNDZ-1276
	RNDZ-1264	RNDZ-1277
	RNDZ-1269	

AREAS OF TECHNICAL RESPONSIBILITY

Book Manager	DM34/J. Ruiz	281-483-1988
Rendezvous Guidance and Procedures	DM34/J. Yencharis	281-483-5976
Flight Dynamics	DM32/D. Mayhew	281-483-2529
Rendezvous Design	USA/S. Snyder	281-282-4351
PROX OPS Design	USA/B. Summa	281-282-3032
Flight Design	USA/R. Moreno	281-483-9040
Rendezvous Training	DT35/A. Fox	281-244-7376
APDS	DF52/J. Dake	281-483-6538

NOTE

This checklist is the controlling crew document for the ISS-10A rendezvous and separation. The Rendezvous Timeline begins at Ti -3:00 hr and continues through docking. This is a complete stand-alone document. The Separation Timeline begins 45 min prior to undock and continues through 1:15 after undock.

Timeline pages assume an FD3 rendezvous and undocking on FD10. Lighting is based on planned rendezvous altitude of 205 nm. Targeting I-Loads are based on 210 nm.

ACRONYMS

AZ, AZM	Azimuth
D/N	Day/Night
EL, ELEV	Elevation
IAH	Inertial
LOS	Line of Sight
LVLH	Local Vertical, Local Horizontal
R	Range
$\dot{R}$, RDOT	Range Rate
R, RBAR	Radius Vector (toward Earth)
RNDZ	Rendezvous
RR	Rendezvous Radar
SK	Stationkeeping
ST, STRK	Star Tracker
V, VBAR	Velocity Vector (direction of orbital travel)
±X, Y, ZLV	±X, Y, or Z Local Vertical (±X, Y, or Z toward Earth)
X, Y, ZPOP	X, Y, or Z orbiter body axis Perpendicular to Orbit Plane (aligned with the angular momentum vector)
±X, Y, ZVV	±X, Y, or Z orbiter body axis along the LVLH Velocity Vector

LIST OF EFFECTIVE PAGES

FINAL	08/23/07
PCN-1	10/01/07

Sign Off	*	120/FIN	4-3		120/FIN
ii	*	120/FIN	4-4		120/FIN
iii	*	120/FIN	4-5		120/FIN
iv	*	120/FIN	4-6		120/FIN
v	*	120/FIN 1	4-7		120/FIN
vi	*	120/FIN 1	4-8		120/FIN
vii	*	120/FIN 1	4-9		120/FIN
viii	*	120/FIN	4-10		120/FIN
ix		120/FIN	4-11		120/FIN 1
x		120/FIN	4-12		120/FIN
xi		120/FIN	4-13		120/FIN
xii		120/FIN	4-14		120/FIN 1
1-1		120/FIN	4-15		120/FIN
1-2		120/FIN	4-16		120/FIN
1-3		120/FIN	4-17		120/FIN 1
1-4		120/FIN	4-18		120/FIN 1
1-5		120/FIN	4-19		120/FIN 1
1-6		120/FIN	4-20		120/FIN 1
1-7		120/FIN	4-21		120/FIN
1-8		120/FIN	4-22		120/FIN 1
1-9		120/FIN	5-1		120/FIN
1-10		120/FIN	5-2		120/FIN
2-1		120/FIN	5-3		120/FIN
2-2		120/FIN	5-4		120/FIN
2-3		120/FIN	5-5		120/FIN
2-4		120/FIN	5-6		120/FIN
2-5		120/FIN 1	5-7		120/FIN
2-6		120/FIN	5-8		120/FIN
2-7		120/FIN 1	5-9		120/FIN
2-8		120/FIN	5-10		120/FIN
2-9		120/FIN	5-11		120/FIN
2-10		120/FIN	5-12		120/FIN
3-1		120/FIN	5-13		120/FIN
3-2		120/FIN	5-14		120/FIN
3-3		120/FIN	5-15		120/FIN
3-4		120/FIN	5-16		120/FIN
3-5		120/FIN	5-17		120/FIN
3-6		120/FIN	5-18		120/FIN
3-7		120/FIN	5-19		120/FIN
3-8		120/FIN	5-20		120/FIN
3-9		120/FIN	5-21		120/FIN
3-10		120/FIN	5-22		120/FIN
3-11		120/FIN	5-23		120/FIN
3-12		120/FIN	5-24		120/FIN
4-1		120/FIN	5-25		120/FIN
4-2		120/FIN	5-26		120/FIN

* – Omit from flight book

5-27	120/FIN
5-28	120/FIN
5-29	120/FIN
5-30	120/FIN
5-31	120/FIN
5-32	120/FIN
5-33	120/FIN
5-34	120/FIN
5-35	120/FIN
5-36	120/FIN
5-37	120/FIN
5-38	120/FIN
5-39	120/FIN
5-40	120/FIN
5-41	120/FIN
5-42	120/FIN
6-1	120/FIN
6-2	120/FIN
6-3	120/FIN
6-4	120/FIN
6-5	120/FIN
6-6	120/FIN
6-7	120/FIN
6-8	120/FIN
6-9	120/FIN
6-10	120/FIN
6-11	120/FIN
6-12	120/FIN
6-13	120/FIN
6-14	120/FIN
7-1	120/FIN
7-2	120/FIN
7-3	120/FIN
7-4	120/FIN
7-5	120/FIN
7-6	120/FIN
7-7	120/FIN
7-8	120/FIN
7-9	120/FIN
7-10	120/FIN
7-11	120/FIN
7-12	120/FIN
7-13	120/FIN
7-14	120/FIN
7-15	120/FIN
7-16	120/FIN
7-17	120/FIN
7-18	120/FIN
7-19	120/FIN
7-20	120/FIN
7-21	120/FIN
7-22	120/FIN
7-23	120/FIN
7-24	120/FIN

8-1	120/FIN
8-2	120/FIN
8-3	120/FIN
8-4	120/FIN
8-5	120/FIN
8-6	120/FIN
8-7	120/FIN
8-8	120/FIN
8-9	120/FIN
8-10	120/FIN
8-11	120/FIN
8-12	120/FIN
8-13	120/FIN
8-14	120/FIN
8-15	120/FIN
8-16	120/FIN
8-17	120/FIN
8-18	120/FIN
8-19	120/FIN
8-20	120/FIN
8-21	120/FIN
8-22	120/FIN
8-23	120/FIN
8-24	120/FIN
8-25	120/FIN 1
8-26	120/FIN 1
8-27	120/FIN
8-28	120/FIN
8-29	120/FIN
8-30	120/FIN
8-31	120/FIN
8-32	120/FIN
8-33	120/FIN
8-34	120/FIN
8-35	120/FIN
8-36	120/FIN
8-37	120/FIN
8-38	120/FIN
8-39	120/FIN
8-40	120/FIN
8-41	120/FIN
8-42	120/FIN
8-43	120/FIN
8-44	120/FIN
9-1 *	120/FIN
9-2 *	120/FIN
CC 9-3 *	120/FIN
CC 9-4 *	120/FIN
CC 9-5 *	120/FIN
CC 9-6 *	120/FIN
CC 9-7 *	120/FIN
CC 9-8 *	120/FIN
CC 9-9 *	120/FIN
CC 9-10 *	120/FIN

***** – Omit from flight book

CC 9-11 ..... * 120/FIN 1
CC 9-12 ..... * 120/FIN
CC 9-13 ..... * 120/FIN
CC 9-14 ..... * 120/FIN
CC 9-15 ..... * 120/FIN 1
CC 9-16 ..... * 120/FIN
CC 9-17 ..... * 120/FIN
CC 9-18 ..... * 120/FIN
CC 9-19 ..... * 120/FIN
CC 9-20 ..... * 120/FIN
CC 9-21 ..... * 120/FIN
CC 9-22 ..... * 120/FIN
CC 9-23 ..... * 120/FIN
CC 9-24 ..... * 120/FIN
CC 9-25 ..... * 120/FIN
9-26 ..... * 120/FIN
CC 9-27 ..... * 120/FIN 1
CC 9-28 ..... * 120/FIN

RENDEZVOUS CUE CARDS

TITLE	Ref. Page	Card No.
RCS BURN (+X, -X, Multi-axis) (Front)	CC 9-3	RNDZ-1a/120/O/B
RENDEZVOUS PRPLT PAD (Back)	CC 9-4	RNDZ-1b/120/O/A
KU OPS (Front)	CC 9-5	RNDZ-2a/120/O/A
(Back)	CC 9-6	RNDZ-2b/120/O/A
APPROACH (Front)	CC 9-7	RNDZ-3a/120/O/B
VBAR APPROACH (Back)	CC 9-8	RNDZ-3b/120/O/B
C/L CAMERA TARGET ALIGNMENT (+VBAR) (Front)	CC 9-9	RNDZ-4a/120/O/A
(Back)	CC 9-10	RNDZ-4b/120/O/A
DOCKING SEQUENCE (Front)	CC 9-11	RNDZ-5a/120/O/B
(Back)	CC 9-12	RNDZ-5b/120/O/A
STOPWATCH RDOT CONVERSION (Front)	CC 9-13	RNDZ-6a/120/O/A
(Back)	CC 9-14	RNDZ-6b/120/O/A
GPC/MDM FAILURE RESPONSE DURING RNDZ (Front)	CC 9-15	RNDZ-7a/120/O/B
RNDZ REF DATA (Back)	CC 9-16	RNDZ-7b/120/O/A
C/L CAMERA CORRIDOR AND ALIGNMENT	CC 9-17	RNDZ-8a/120/O/A
CAMERA A/D RANGE RULER	CC 9-18	RNDZ-9a/120/O/A
C/L CAMERA ZOOM CALIBRATION (RING READY FOR DOCK)	CC 9-19	RNDZ-10a/120/O/A
760 PGSC DISPLAY OF C/L CAMERA CORRIDOR AND ALIGNMENT	CC 9-20	RNDZ-11a/120/O/A
760 PGSC CAMERA A/D RANGE RULER	CC 9-21	RNDZ-12a/120/O/A
FLIGHT SUB ANG RULER	CC 9-22	RNDZ-13a/120/O/A
V10 MONITOR CORRIDOR	CC 9-23	RNDZ-14a/120/O/A
A31P PGSC DISPLAY OF C/L CAMERA CORRIDOR AND ALIGNMENT	CC 9-24	RNDZ-15a/120/O/A
A31P PGSC CAMERA A/D RANGE RULER	CC 9-25	RNDZ-16a/120/O/A
RCS FAILURE RESPONSE DURING PROX OPS	CC 9-27	RNDZ-17a/120/O/B
RCS/DPS/EPS FAILURE IMPACTS	CC 9-28	RNDZ-17b/120/O/A

* – Omit from flight book

This Page Intentionally Blank

CONTENTS PAGE

FLIGHT RULES SUMMARY & FLIGHT PROFILE 1-1
FLIGHT RULES SUMMARY 1-2
RNDZ/PROX OPS BREAKOUT PROCEDURES OVERVIEW 1-2
RNDZ BURN SOLUTION SELECTION GUIDELINES 1-3
ENGINE SELECTION GUIDELINES 1-3
FAILURE/RESPONSE SUMMARY 1-4
ORBT RENDEZVOUS PROFILE 1-5
POST Ti PROFILE 1-6
TERMINAL PHASE, RPM, AND TORVA 1-7
VBAR APPROACH 1-8
UNDOCKING, TORS/TORF, AND FINAL SEPARATION 1-9

UNDOCKING/SEPARATION TIMELINE 2-1

MANEUVER PADS 3-1

RENDEZVOUS TIMELINE 4-1

CONTINGENCY OPS 5-1
RNDZ OMS BURN 5-3
SENSOR FAIL 5-7
S TRK NAV – HIGH INITIAL RESID 5-8
FLTR MINUS PROP 5-9
COAS NAVIGATION 5-10
BACKOUT/BREAKOUTS 5-11
VBAR CORRIDOR BACKOUT 5-12
BREAKOUT 5-14
SHUTTLE NOSE IN-PLANE BREAKOUT (R < 700 ft) 5-16
RNDZ BREAKOUT 5-18
EXPEDITED SEPS 5-19
SHUTTLE EMERGENCY SEPARATION 5-21
ANY ATTITUDE SEPARATION 5-23
Ti DELAY BURN 5-27
RNDZ NAV RECOVERY 5-29
TGT ITER 5-30
LOSS OF COMM 5-31
DEGRADED CONTROL 5-33
DEGRADED +X TRANSLATION 5-35
-X TRANSLATION 5-36
LOSS OF FORWARD SIDE-FIRING JETS 5-37
ONE FxD JET 5-38
BOTH FxD JETS (SAME SIDE) 5-39
VRCS 5-41

REFERENCE DATA 6-1
ISS RNDZ OPS DAP CONFIGURATIONS 6-2
POST-CONTACT THRUST (PCT) REFERENCE DATA 6-3
TARGETING DATA 6-4
POST NC 6-6
Ti 6-7
MC3 6-8
TCS REFLECTOR VISIBILITY DURING APPROACH 6-9
HHL AIMING LOCATIONS 6-10
SHUTTLE CENTERLINE TARGET 6-11
ISS ATTITUDE CONTROL SYSTEM MODING INDICATORS 6-12
RANGING CHARTS 6-13
COAS SUBTENDED ANGLES (DEG) VS RANGE (FT) 6-14

RENDEZVOUS TOOLS 7-1
CCTV CONFIG FOR DOCKING/UNDOCKING 7-2
RNDZ TOOLS CHECKOUT 7-4
TROUBLESHOOTING 7-5
HAND-HELD LIDAR CHECKOUT 7-6
STOW 7-6
OPS 7-7
RPOP INITIALIZATION 7-8
OPS 7-9
FUNCTION KEY SUMMARY 7-11
KEYSTROKE SUMMARY 7-15
TRAJECTORY DATA SOURCE OPTIONS 7-16
TCS ACTIVATION 7-18
MANUAL ACQUISITION 7-19
DEACTIVATION 7-20
LIMITS 7-21
TRAD FAIL RANGE AND RANGE RATE DETERMINATION 7-21
NOMINAL OPS 7-21
RADAR FAIL 7-22
TCS FAIL 7-22
HHL FAIL 7-22
PCMMU/WINDECOM FAIL 7-23
PGSC FAIL (NO PROP, NO TCS) 7-23

APDS 8-1
APDS NOMINAL 8-3
DOCKING MECHANISM INITIALIZATION 8-4
POWERUP 8-5
POWERDOWN 8-6
PREP 8-7
UNDOCKING PREP 8-7
DOCKING RING EXTENSION 8-8
RETRACTION (NOT MATED) 8-9
AIRLOCK FAN ACT AND ODS VOLUME PREP 8-10
POST DOCKING HATCH LEAK CHECK 8-11
AIRLOCK PREP FOR INGRESS – BYPASS CONFIG 8-12
APDS OFF-NOMINAL 8-13
POWER FAILED OFF (STATUS LTS OFF) 8-14
DAMPING FAILED ON 8-15
CAPTURE LT FAILED ON 8-15
FIXERS FAILED ON 8-16
OFF LT FAILED ON 8-18
OFF 8-18
RING FAILS TO DRIVE 8-19
DRV CMD OFF 8-19
FINAL POSITION LT FAILED ON 8-20
FORCE RING ALIGNMENT 8-20
CLUTCH NOT ‘LOCK’ 8-21
APDS CIRCUIT PROTECT OFF LT FAILED OFF 8-21
HOOKS 1(2) OPEN LT FAILED ON 8-21
NOT CLOSED WITHIN SINGLE MTR TIME 8-22
READY TO HOOK LT FAILED ON 8-23
HOOKS 1(2) CLOSED LT FAILED ON 8-23
LATCHES OPEN LT FAILED OFF 8-24
APDS POWER FAILED OFF 8-24
DOCKING MECHANISM DEMATE/REMATE 8-25
ODS HOOKS OPEN – CONTINGENCY 8-27

PMA 2/3 HOOKS OPEN – CONTINGENCY 8-30
APDS FAILED CAPTURE RECONFIG 8-33
PMA 2/3 HOOKS CLOSE 8-35
OPEN 8-37
REFERENCE DATA 8-39
APDS FAILURE/IMPACT MATRIX 8-40
(TLM) 8-43
CUE CARD CONFIGURATION 9-1

This Page Intentionally Blank

FLIGHT RULES SUMMARY & FLIGHT PROFILE

FLIGHT RULES SUMMARY 1-2
RNDZ/PROX OPS BREAKOUT PROCEDURES OVERVIEW 1-2
RNDZ BURN SOLUTION SELECTION GUIDELINES 1-3
ENGINE SELECTION GUIDELINES 1-3
FAILURE/RESPONSE SUMMARY 1-4
ORBT RENDEZVOUS PROFILE 1-5
POST Ti PROFILE 1-6
TERMINAL PHASE, RPM, AND TORVA 1-7
VBAR APPROACH 1-8
UNDOCKING, TORS/TORF, AND FINAL SEPARATION 1-9

FLIGHT RULES SUMMARY

RNDZ/PROX OPS BREAKOUT PROCEDURES OVERVIEW

RANGE BREAKOUT REQD	BREAKOUT PROCEDURE AND SUMMARY
Prior to Ti	Discontinue RNDZ burns; specific breakout only on MCC call
Ti - 5 Minutes	If GO for Ti not received, Perform Ti Delay Burn, 5-27
Between Ti and TORVA init (+X burns to start TORVA are complete)	RNDZ BREAKOUT (CONTINGENCY OPS), 5-18 3 fps retrograde
Between TORVA init (+X burns to start TORVA are complete) and Vbar arrival	SHUTTLE NOSE IN-PLANE BREAKOUT (CONTINGENCY OPS), 5-16 1.5 fps ±X burn, followed in 30 min by 4.3/3.6 fps retrograde/out-of-plane burn (posigrade if second approach is desired)
Between Vbar arrival and contact OR Between undock and flyaround start	VBAR BREAKOUT (CONTINGENCY OPS), 5-14 If RNG < 150 ft, back out to 150 ft. When RNG > 150 ft, perform 1.5 fps radial up burn in LO Z, followed in 28 min by 3.0 fps posigrade/retrograde burn
During flyaround	SHUTTLE NOSE IN-PLANE BREAKOUT (CONTINGENCY OPS), 5-16 1.5 fps ±X burn, followed in 30 min by 4.3/3.6 fps retrograde/out-of-plane burn (posigrade if second approach is desired)
Otherwise:	SEP MANEUVER (ORB OPS), Perform 1 fps away from target, followed in 2 min by 2 fps out of plane, followed in 15 min by 3 fps posigrade
SHUTTLE BACKOUT	
Prior to docking	See VBAR CORRIDOR BACKOUT (CONTINGENCY OPS), 5-12

RNDZ BURN SOLUTION SELECTION GUIDELINES

BURN	SOLUTION PRIORITY
All burns prior to, but not including, NCC	1) Ground solution
NCC & Ti	1) Onboard FLTR solution if STRK or RR NAV converged* (for COAS, use step 2 below) 2) Onboard FLTR solution if it agrees with ground solution** 3) Onboard PROP solution if it agrees with ground solution 4) Ground solution
Post-Ti midcourse corrections	1) Onboard solution

*For the purpose of burn solution selection, NAV is converged if for the present sensor in acquisition (RR or STRK), at least 40 marks have been accepted with state vector position update of less than 0.5 Kft for at least the last 4 marks; or if state vector updates are small and stable. These criteria do not apply to COAS NAV

**Burn solutions are considered to be in agreement if delta Vs differ by no more than the 'final-ground' limits for each axis

RNDZ BURN ENGINE SELECTION GUIDELINES

DELTA V	ENGINE
< 4 fps	RCS – Primary technique is multi-axis
4 to 6 fps	RCS – Primary technique is +X
> 6 fps	OMS – Single engine

RNDZ FAILURE/RESPONSE SUMMARY

FAILURE	RESPONSE
No sensor data (RR, STRK, or COAS) during RNDZ and no visual acquisition	Breakout Burn by MC2 + 20 min
Good sensor data (RR, STRK, or COAS) during RNDZ, but no visual or RR acquisition	Breakout Burn by MC2 + 24 min
Target > 30 deg from COAS horizontal at start of radar fail correction	Breakout ASAP; use RNDZ BREAKOUT (CONTINGENCY OPS), 5-18, until RBAR arrival
Prop quantities violate bingo numbers on RNDZ PRPLT PAD (Cue Card) or Orbiter systems malfunctions require breakout	Breakout per overview on 1-2
SYSTEMS: DPS: < 2 GNC GPCs	2 GNC GPCs reqd for Ti and PROX OPS within 250 ft. Loss of GNC GPC redundancy inside 250 ft requires backout to 250 ft and stationkeep until reconfiguration to a 2 GNC redundant set is complete
GNC: Loss of redundant +Z Trans or PRCS TRANS, any axis ↓ or PRCS ROT, any axis ↓ or AFT THC (-Z sense), > 1 TX contact ↓, all TY contacts ↓, all TZ contacts ↓ or AFT RHC, all channels, any axis ↓ or < 2 IMUs	PROX OPS within 250 ft not permitted
Both Left Aft firing jets ↓ or Both Right Aft firing jets ↓	Continue Approach, per DEGRADED +X TRANSLATION (CONTINGENCY OPS)
Two Forward firing jets ↓	Continue Approach, per DEGRADED -X TRANSLATION (CONTINGENCY OPS)
Both Forward Right firing jets ↓ or Both Forward Left firing jets ↓	PROX OPS within 250 ft not permitted. Approach or Backout to 250 ft per LOSS OF FORWARD SIDE FIRING JETS (CONTINGENCY OPS)
One Forward Down firing jet ↓	Continue Approach per LOSS OF ONE FxD JET (CONTINGENCY OPS)
Both Forward Down firing jets same side ↓	PROX OPS within 250 ft not permitted. Approach or Backout to 250 ft per LOSS OF BOTH FxD JETS (SAME SIDE) (CONTINGENCY OPS)
Loss of VRCS	Use ALT in place of VERN during RNDZ, approach outside 2000 ft, and sep Use PRI in place of VERN during approach inside 2000 ft, and flyaround See LOSS OF VRCS (CONTINGENCY OPS)
MECH: 1 KU ANTENNA STOW MOTOR ↓	Normal ops

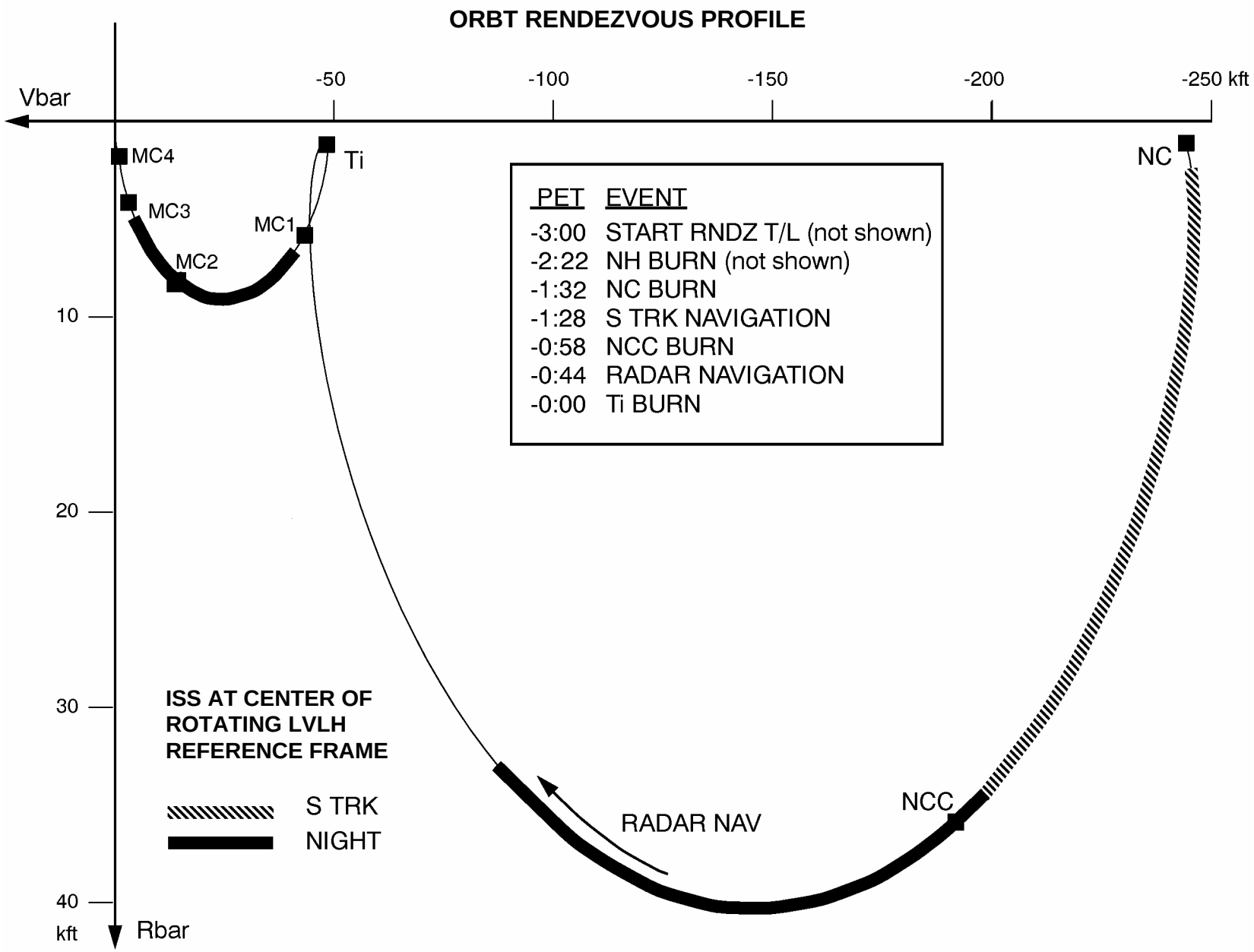
ORBT RENDEZVOUS PROFILE
Vbar
-50
-100
-150
-200
-250 kft
MC4
MC3
MC2
MC1
Ti
NC
NCC
RADAR NAV
10
20
30
40
kft
Rbar
PET EVENT
-3:00 START RNDZ T/L (not shown)
-2:22 NH BURN (not shown)
-1:32 NC BURN
-1:28 S TRK NAVIGATION
-0:58 NCC BURN
-0:44 RADAR NAVIGATION
-0:00 Ti BURN
ISS AT CENTER OF
ROTATING LVLH
REFERENCE FRAME
S TRK
NIGHT

ORBT POST Ti PROFILE

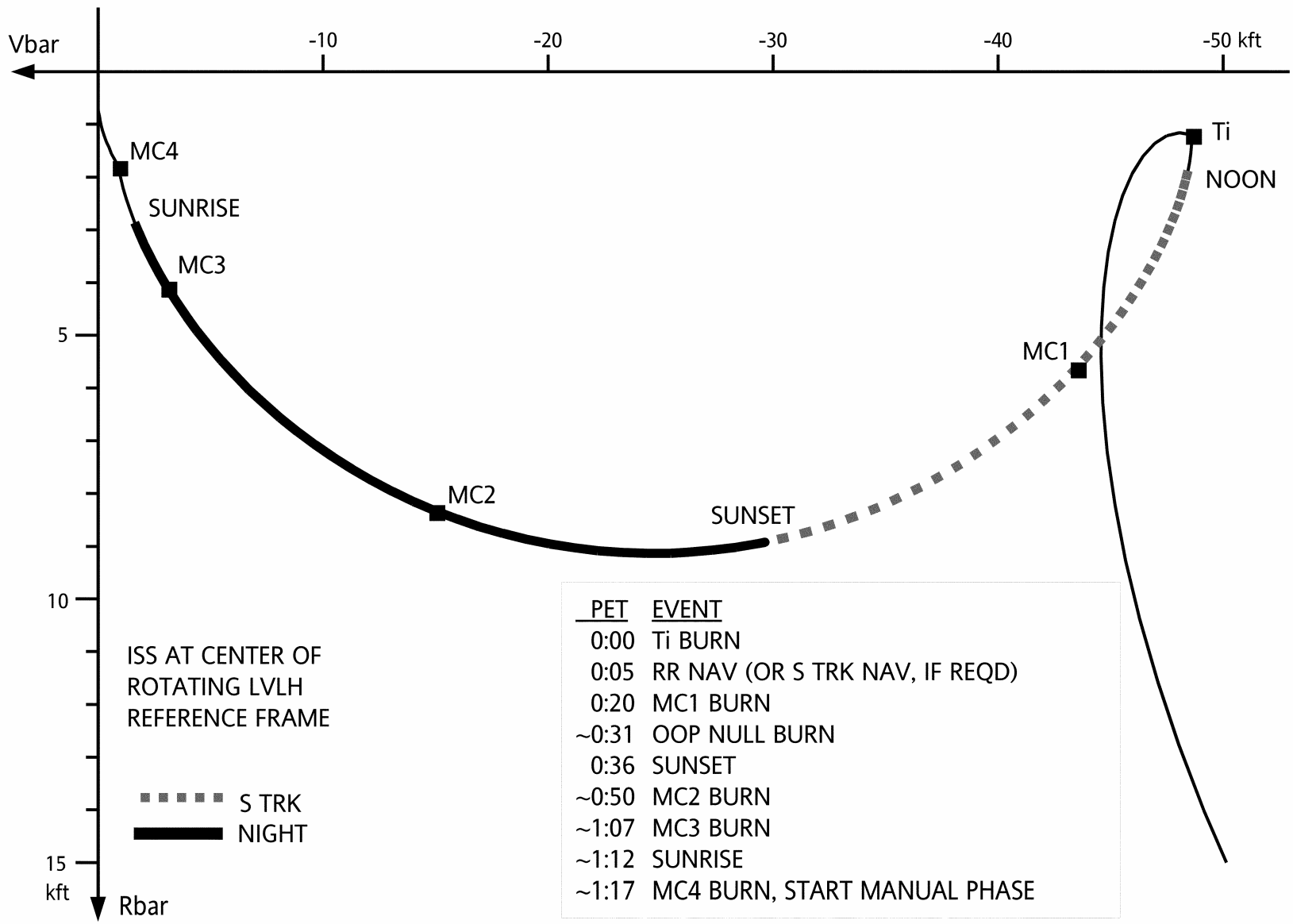

PET	EVENT
0:00	Ti BURN
0:05	RR NAV (OR S TRK NAV, IF REQD)
0:20	MC1 BURN
~0:31	OOP NULL BURN
0:36	SUNSET
~0:50	MC2 BURN
~1:07	MC3 BURN
~1:12	SUNRISE
~1:17	MC4 BURN, START MANUAL PHASE

TERMINAL PHASE, RPM, AND TORVA

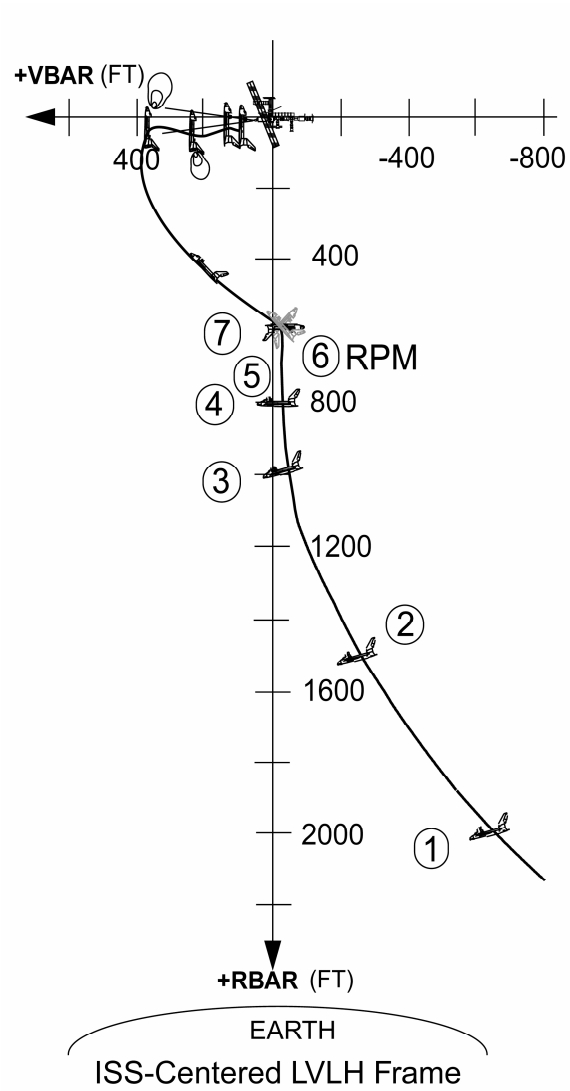

	MC2 ET (h:mm)	Range (ft) CG-CG	Rdot (fps)	EVENT
1	0:27	2000	-3.0	MANUAL PHASE TAKEOVER (POST-MC4)
	0:29	1700	-2.4	
2	0:31	1500	-2.1	
3	0:36	1000	-1.3	TRANSITION TO LOWZ
	0:37	900	-1.1	
4				WHEN IN RBAR ATTITUDE: LOAD DAP A9/B9 MOD DAP A PRI/VERN ROT RATE TO 0.75 DEG/SEC AND YAW JET OPTION TO BOTH NOSE & TAIL (ALL) LOAD UNIV PTG P=145 DEG
		800	-0.9	
		700	-0.6	
		650	-0.4	
5	0:46	620	0.0	STATIONKEEP TO AVOID SHADOWING IF REQUIRED
6	1:00	OPTION 620 600 580	-0.35 -0.25 -0.15	**INITIATE RPM**: DAP A/PRI, ITEM 19 WHEN -Z ADI PITCH > 100 DEG: DAP A/VERN WHEN -Z ADI PITCH > 170 DEG: DAP FREE, RESET UNIV PTG P=270 DEG, ITEM 19, DAP PRI DIGITAL IMAGERY TAKEN FROM ISS SM WHEN -Z ADI PITCH > 10 DEG: DAP AUTO WHEN RPM COMPLETE: DAP VERN
7	1:11	OPTION 600 550 500	-0.7 -0.6 -0.4	RELOAD DAP A9, LOAD UNIV PTG P=179 DEG, REESTABLISH RDOT PER TORVA ICs **INITIATE TORVA**: DAP A, ITEM 19 (+X PULSES AS REQ'D TO NULL TARGET MOTION IN CAMERA)

VBAR APPROACH

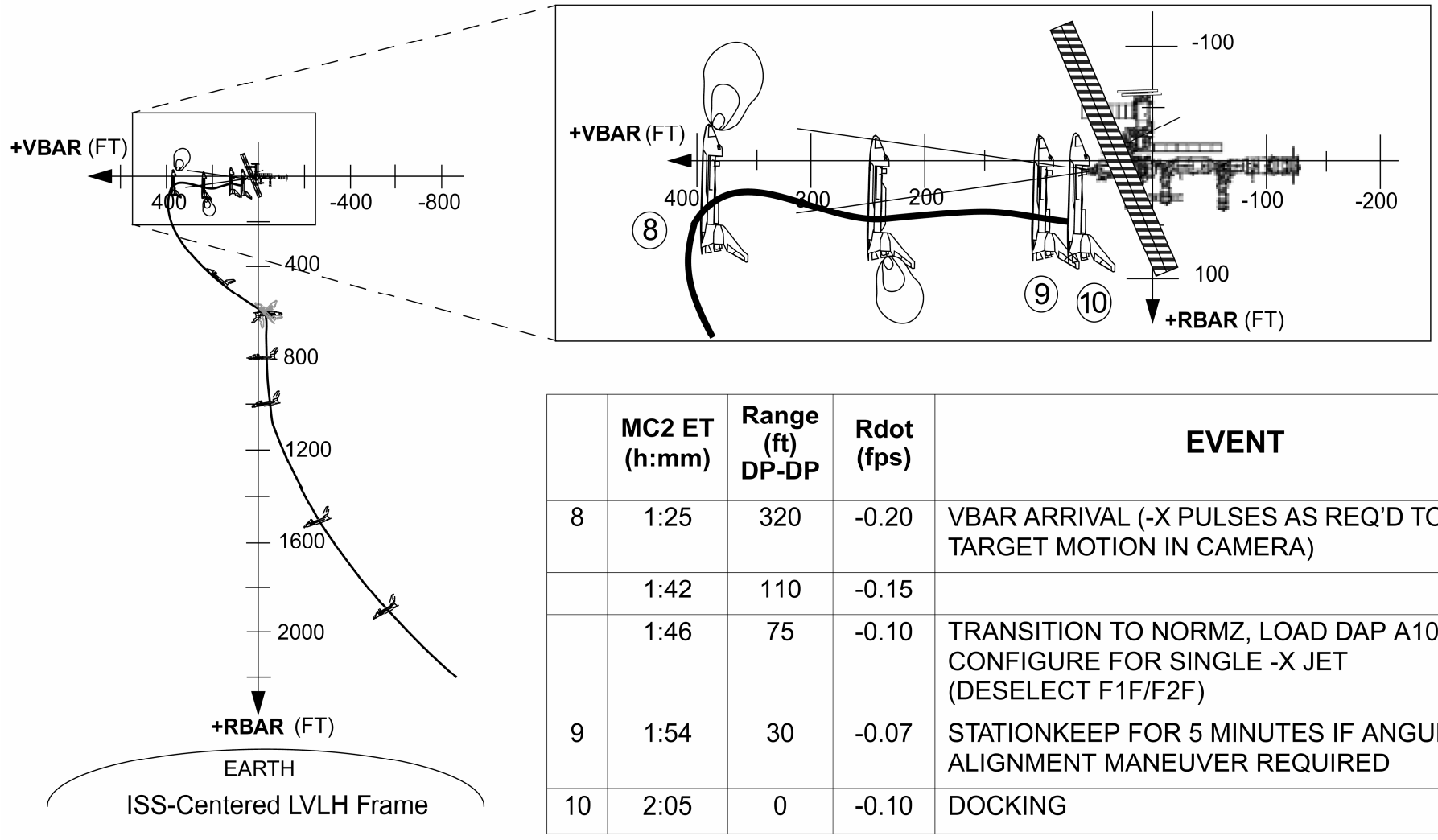

	MC2 ET (h:mm)	Range (ft) DP-DP	Rdot (fps)	EVENT
8	1:25	320	-0.20	VBAR ARRIVAL (-X PULSES AS REQ'D TO NULL TARGET MOTION IN CAMERA)
	1:42	110	-0.15	
	1:46	75	-0.10	TRANSITION TO NORMZ, LOAD DAP A10/B10, CONFIGURE FOR SINGLE -X JET (DESELECT F1F/F2F)
9	1:54	30	-0.07	STATIONKEEP FOR 5 MINUTES IF ANGULAR ALIGNMENT MANEUVER REQUIRED
10	2:05	0	-0.10	DOCKING

UNDOCKING, TORS/TORF, AND FINAL SEPARATION

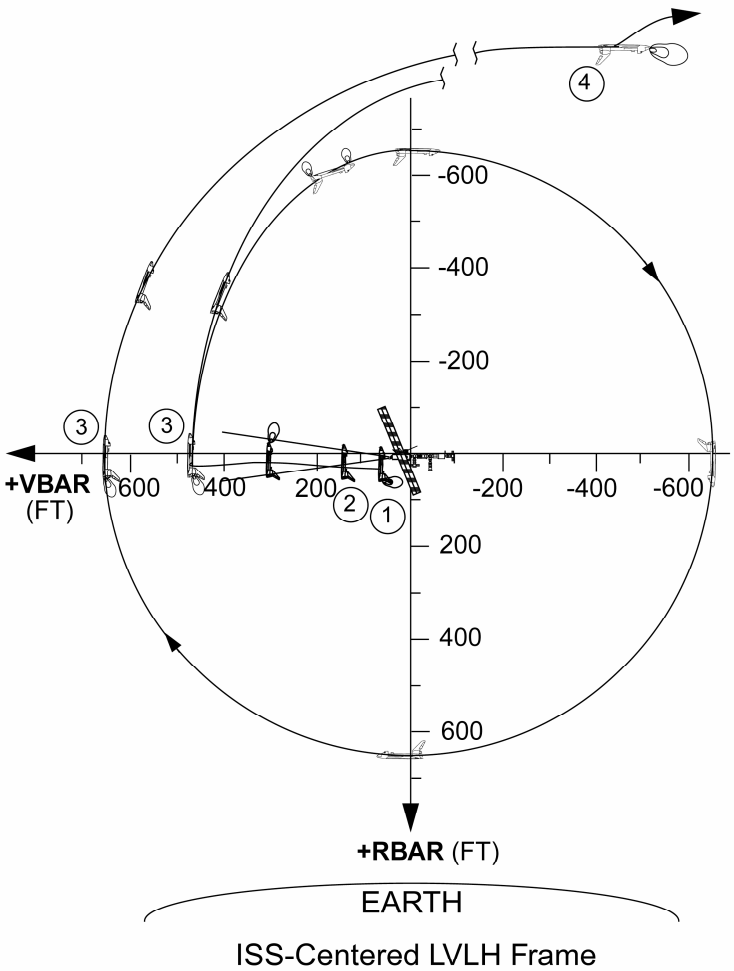

	UNDOCK ET (h:mm)	RANGE (ft) DP-DP	EVENT
	-0:03	0	ORBITER AND ISS IN FREE DRIFT TO BEGIN UNHOOKING (ISS LVLH PYR 0,0,0 ATTITUDE)
1	0:00	0 2	**UNDOCKING** AT MIDNIGHT-2 MIN; DAP B/ALT MODE TO LVLH; MAINTAIN CORRIDOR
	0:01		SELECT VERNS; PERFORM DAP B +Z NORMZ BURNS AT 10 SEC INTERVALS TO BUILD OPENING RATE TO 0.15 FPS
	>0:03	>30	DAP B +Z NORMZ BURNS AT 10 SEC INTERVALS TO BUILD OPENING RATE TO 0.20 FPS
		50	RESELECT -X JETS (F1F, F2F)
2	0:07	75	TRANSITION TO LOWZ
3	0:29 [1:15]*	>400 (CG-CG)	**SEP1**: 1.5 FPS +X, RADIAL BURN [IF PROP AVAILABLE, PERFORM 1/4 LAP TORS BETWEEN 400 AND 600 FT (CG-CG); NULL OPENING RATE OUTSIDE 600 FT; PERFORM 3/4 LAP TORF BETWEEN 600 AND 700 FT; THEN PERFORM SEP1]
4	0:57 [1:43]*	>2000 (CG-CG)	**SEP2**: 1.0 FPS -X, NORMZ POSIGRADE BURN

* ALTERNATE TIMES ARE FOR FLYAROUND CASE

This Page Intentionally Blank

UNDOCKING/SEPARATION TIMELINE

This Page Intentionally Blank

THIS PAGE INTENTIONALLY BLANK

UNDOCKING/SEPARATION PAD 4A

Nominal Undocking Time: | | / | | | : | | | : | | |

Orbiter Weight: | | | | | | |

Flyaround Terminate Criteria Post-Undocking:

When FRCS QTY < [ ] % or L or R RCS QTY < [ ] % :

Go to SHUTTLE NOSE IN-PLANE BREAKOUT (CONTINGENCY OPS), 5-16 >>

PET

-00:45

A12

√DPS config for Undocking Ops - STRING 1233

CONFIGURE FOR SEPARATION [5A]

MCC UPDATE
ORB SV
TGT SV
Covar Matrix

MCC UPDATE
Undocking Time [4A]

-00:40

ENABLE RENDEZVOUS NAV [5B]

On RPOP PGSCs:
Perform RPOP INITIALIZATION (RNDZ TOOLS), 7-8, then:
Perform RPOP OPS, steps 1 thru 5 (RNDZ TOOLS), 7-9, then:
Perform TCS ACTIVATION, steps 1 thru 3 (RNDZ TOOLS), 7-18, then:
Perform TCS MANUAL ACQUISITION, step 1 (RNDZ TOOLS), 7-19
(Set RANGE = 4 ft, AZIMUTH = 0, ELEVATION = 0)
NOTE: TCS will not track until after undock

-00:35

Perform HHL CHECKOUT (RNDZ TOOLS), 7-6

-00:30

Perform DOCKING MECHANISM POWERUP (APDS), 8-5
UNDOCKING PREP (APDS), 8-7

-00:25

Perform CCTV CONFIG FOR DOCKING/UNDOCKING (RNDZ TOOLS), 7-2

-00:20

√MCC
DAP: FREE
O14:F, RJDA 1A L2/R2 MANF DRIVER - OFF
O15:F, RJD MANF L5/F5/R5 DRIVER - OFF
O16:F Pri RJD LOGIC (eight) - ON

√MCC FOR GO TO POWER UP Vern AND Pri DRIVERS (Pri in [6A])
RJD MANF L5/F5/R5 DRIVER - ON
Wait 5 sec,
DAP: AUTO

-00:15

CONFIGURE FOR SEPARATION [5A]

GNC 20 DAP CONFIG

CRT √DAP config: A12
√DAP: LO Z
√DAP: A/AUTO/VERN(ALT)

R1 O2 TK3 HTR A - AUTO

A6U ADI ATT - LVLH
ERR - MED
RATE - MED
SENSE - -Z
√FLT CNTLR PWR - OFF

GNC 23 RCS

CRT RCS F – ITEM 1 EXEC (*)
JET DES F1L – ITEM 9 EXEC (no *)
F3L – ITEM 11 EXEC (no *)
F2R – ITEM 13 EXEC (no *)
F4R – ITEM 15 EXEC (no *)
F1U – ITEM 17 EXEC (no *)
F3U – ITEM 19 EXEC (no *)
F2U – ITEM 21 EXEC (no *)

GNC UNIV PTG

TGT ID √+2
BODY VECT √+5
P √+180
Y √+0
OM √+0
√TRK - ITEM 19 EXEC (CUR - *)
√ERR TOT - ITEM 23 EXEC (*)

OPS 202 PRO

GNC ORBIT MNVR EXEC

Set TIG to Undocking Time and update Orbiter weight per [4A]
Enter any non-zero ΔV
LOAD – ITEM 22 EXEC
TIMER– ITEM 23 EXEC
OPS 201 PRO

Install -Z COAS
KU OPS Cue Card
CORRIDOR Overlay
RANGE RULER Overlay

ENABLE RENDEZVOUS NAV [5B]

GNC 33 REL NAV

CRT RNDZ NAV ENA - ITEM 1 EXEC (*)
SV SEL, ITEM 4 - FLTR

UNDOCKING OPERATIONS [6A]

1. PREP FOR UNDOCKING
When MCC-H and ISS issue GO for Undocking:

[GNC 33 REL NAV]

CRT ORB TO TGT - ITEM 10 EXEC

O14, O15, O16:E All DDU cbs (six) – cl

A6U FLT CNTLR PWR - ON

2. RECONFIGURE DAP

[GNC UNIV PTG]
When ATT and RATES in limits:

ATT ERR (Each Axis)	**≤ 3.0 (VERN)** **≤ 5.0 (ALT)**
ROLL, YAW RATE	**≤ 0.05 (VERN)** **≤ 0.07 (ALT)**
PITCH RATE	**-0.115 ≤ RATE ≤ -0.015 (VERN)** **-0.135 ≤ RATE ≤ +0.005 (ALT)**

-03:00 > DAP: FREE
O14:F, O15:F, O16:F Pri RJD DRIVER (eight) - ON

[GNC 20 DAP CONFIG]
CRT Config DAP A,B to A9,B9
X Jets ROT ENA – ITEM 7 EXEC (no ∗)
DAP: B/FREE/ALT
DAP TRANS: NO LO Z
√DAP TRANS: PULSE/PULSE/PULSE
√SENSE: -Z

3. COMMAND UNDOCKING
[SM 167 DOCKING STATUS]

A7L ∗ If HOOKS 1(2) OPEN lt failed on: ∗
∗ APDS POWER A_{DS} - OFF (√A_{DS} and failed lts off) ∗

APDS CIRC PROT OFF pb - push
√CIRCUIT PROTECT OFF lt - lt on

-02:20 > UNDOCKING pb - push
√HOOKS 1, HOOKS 2 CLOSED lt (two) - lt off [HK1,HK2 POS (two) < 92% + decr]

CRT ∗ If Hooks 1(2) fail to drive (HK1(2) DRV CMD - OFF): ∗
A7L ∗ OPEN HOOKS pb - push ∗
∗ If Hooks 1(2) appear to stop before reaching end of travel ∗
∗ [HK1(2) Pos > 4% + not decr]: ∗
∗ Allow for single motor drive time (~4:40) before performing ∗
∗ POWER OFF pb - push ∗
∗ ON pb - push ∗

-00:30 > √INTERF SEALED lt - lt off
√READY TO HOOK lt - lt off [HK1,HK2 POS (two) approx 30%]

00:00 √HOOKS 1, HOOKS 2 OPEN lt (two) - lt on [HK1,HK2 POS (two) = 4-5%]
√UNDOCK COMPLETE lt - lt on

∗ (+02:20) If HOOKS 1(2) fail to open ∗
∗ (confirmed by no physical separation): ∗
∗ Inform MCC: "Hooks failed to open" ∗
∗ POWER OFF pb - push ∗
∗ ON pb - push ∗
∗ CLOSE HOOKS pb - push ∗
∗ √HK1,HK2 POS (two) - incr ∗
∗ √HOOKS 1, HOOKS 2 CLOSED lt (two) - lt on [HK1,HK2 POS=92-93%] ∗
∗ POWER OFF pb - push ∗
∗ Perform DOCKING MECHANISM POWERDOWN (APDS), 8-6 ∗
∗ √MCC for IFM capability ∗
∗ Prepare for 96 BOLT EVA TIMELINE (EVA FS, ORB CONT EVA), ∗
∗ then, ∗
∗ Perform ODS HOOKS OPEN-CONTINGENCY (APDS),8-27 >> ∗

4. POST UNDOCKING
00:00 > Inform MCC-H and ISS:
"Physical Separation"

When petals clear:
DAP: B/LVLH/ALT
√DAP TRANS: PULSE/PULSE/PULSE, NO LO Z
THC: as reqd to maintain C/L target within 8 deg corridor on C/L camera
Note: DAP A allowed for ±X and -Z (in) THC

At physical sep + 1:00:
DAP: VERN(ALT)
THC: +Z (out) pulses at 10 sec intervals to build to 0.15 fps
Record time (mm:ss) of VERN select or last pulse: _____ : _____
Perform TCS MANUAL ACQUISITION, step 3 (RNDZ TOOLS), 7-19

At last pulse TIG+2:00 and when RNG > 30 ft (DP-DP):
THC: +Z (out) pulses at 10 sec intervals as reqd to establish and maintain RDOT > 0.2 fps

When RNG = 50 ft (DP-DP):
[GNC 23 RCS]
CRT √RCS FWD – ITEM 1 EXEC (∗)
JET DES F1F – ITEM 31 EXEC (no ∗)
F2F – ITEM 35 EXEC (no ∗)

5. POWER OFF
A7L POWER OFF pb - push
√STATUS lt (eighteen) - lt off

GO TO SEP/FLYAROUND [8A]

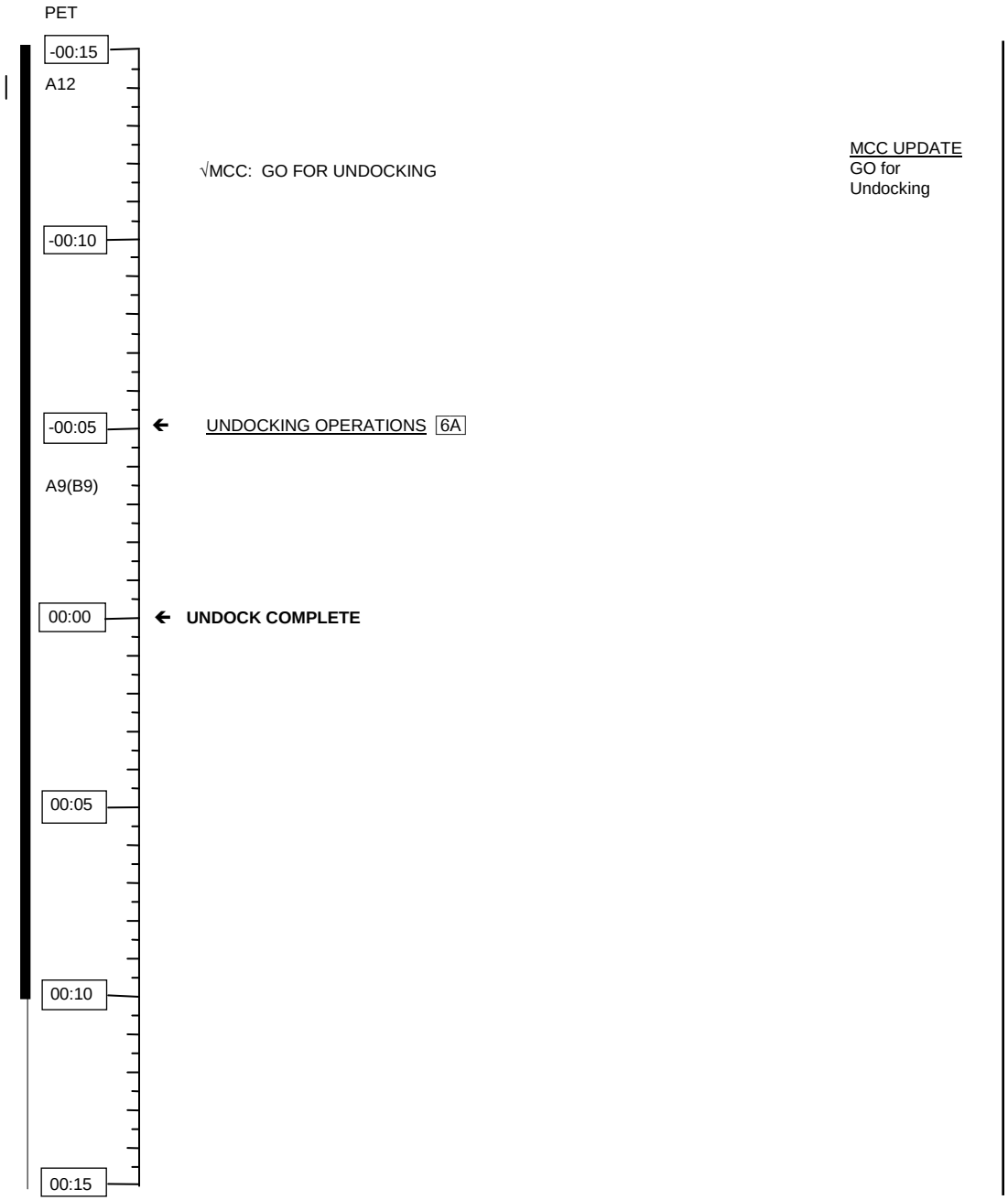

UNDOCKING / SEPARATION TIMELINE

SEP/FLYAROUND 8A

1. When RNG > 75 ft (DP-DP):
   DAP: LO Z
   THC: Maintain RDOT > 0.2 fps
   Maintain C/L tgt within 8 deg corridor on C/L camera
   NOTE: DAP A allowed for ± X and ± Z THC

   If TCS not tracking during corridor sep or flyaround, provide periodic HHL range updates to MCC

2. When RNG > 150 ft (DP-DP): If radar desired, INIT RADAR ACQ 10A
   NOTE: DAP A allowed for all THC Inputs

3. When RNG > 250 ft: Set RPOP POR: ORB CG - TGT CG
   Set RPOP Overlay: Flyaround Zone [Shift]/[F7]
   Perform DOCKING MECHANISM POWERDOWN (APDS), 8-6

4. When RNG = 450 ± 50 FT (CG-CG)

   GNC UNIV PTG
   TGT ID √+2
   BODY VECT √+5
   P +90 (-RBAR)
   Y √+0
   OM √+0
   √ERR TOT – ITEM 23 (*)
   TRK – ITEM 19 EXEC (CUR - *)

   If no flyaround, Go to SEP BURN 8B

   If flyaround, Go to FLYAROUND 9A

SEP BURNS 8B

1. RADIAL BURN
   DAP TRANS: NORM/PULSE/PULSE
   THC: +X (up) 6 sec (1.5 fps)

   DAP: A/AUTO/VERN(PRI)
   DAP TRANS: PULSE/PULSE/PULSE
   FLT CNTLR PWR – OFF

   Inform MCC when SEP complete
   Record Radial Burn TIG _____/_____:_____:_____

   GNC 2 TIME
   Set GNC TIMER counting to final burn (Radial Burn TIG + 28 min)

2. CONFIG FOR FINAL BURN
   At final burn TIG - 1 minute:

A6U √SENSE: -Z
   FLT CNTRL PWR – ON
   DAP TRANS: NORM/PULSE/PULSE
   DAP: NO LO Z

3. FINAL BURN
   At final burn TIG:

   Aft THC: -X (down) 4 sec (1.0 fps)

   DAP TRANS: PULSE/PULSE/PULSE
   FLT CNTLR PWR – OFF

   Inform MCC when SEP complete

   Go to TERMINATE SEP OPS 8C

TERMINATE SEP OPS 8C

If KU MODE – RDR PASSIVE,
Perform KU OPS, step 4 (Cue Card)

GNC 33 REL NAV
CRT RNDZ NAV ENA - ITEM 1 EXEC (no *)

GNC 20 DAP CONFIG
Config DAP A, B to A1, B1

A6L LIGHTS TRUSS FWD, AFT (two) - OFF
VESTIBULE PORT, STBD (two) - OFF

Exit RPOP - [Shift]/[F10]
Perform TCS DEACTIVATION (RNDZ TOOLS), 7-20
Perform HHL STOW (RNDZ TOOLS), 7-6

R1 O2 TK3 HTR A – OFF

Go to FLIGHT PLAN

FLYAROUND 9A

√Flyaround terminate criteria per 4A

* If Breakout required during flyaround *
* Go to SHUTTLE NOSE IN-PLANE BREAKOUT *
* (CONTINGENCY OPS), 5-16 >> *

1. DAP: A/AUTO/VERN(PRI)
   THC: Maintain ISS cg inside ± 15 degree vertical and
   ± 20 degrees horizontal on C/L camera

2. Prior to –Rbar crossing (Aft ADI P = 270):
   GNC UNIV PTG
   P +0 (-VBAR)
   TRK - ITEM 19 EXEC (CUR - *)

   When RNG > 600 ft (CG-CG):
   THC: Maintain flyaround range of 650 ± 50 ft (CG-CG)

3. Prior to -Vbar crossing (Aft ADI P = 0):
   GNC UNIV PTG
   P +270 (+RBAR)
   TRK - ITEM 19 EXEC (CUR - *)

4. Prior to +Rbar crossing (Aft ADI P = 90):
   GNC UNIV PTG
   P +180 (+VBAR)
   TRK - ITEM 19 EXEC (CUR - *)

5 Prior to +Vbar crossing (Aft ADI P = 180):
   GNC UNIV PTG
   P +90 (-RBAR)
   TRK - ITEM 19 EXEC (CUR - *)

6. Repeat steps 2 thru 5 as reqd to continue flyaround

7. At flyaround completion -10 minutes:
   If radar not tracking target:
   INITIAL RADAR ACQ 10A

8. When flyaround complete (in +Vbar attitude),
   Go to SEP BURN 8B

FLYAROUND RANGE REFERENCE

NOTE: Range conversion assumes ISS cg in center of centerline camera at a cg-cg range of 650 ft, with HHL aim point directly between HHL and ISS cg

650 FT cg to cg
HHL RANGE CONVERSION

HHL Aim Point	Raw HHL Range (ft)
US Lab - Fwd	585
Centerline Target	578
ISS Airlock	626
P6 Truss - End	592
Progress - Aft	553

TCS/Reflector Visibility During Flyaround for Flight ISS-10A (STS-120)

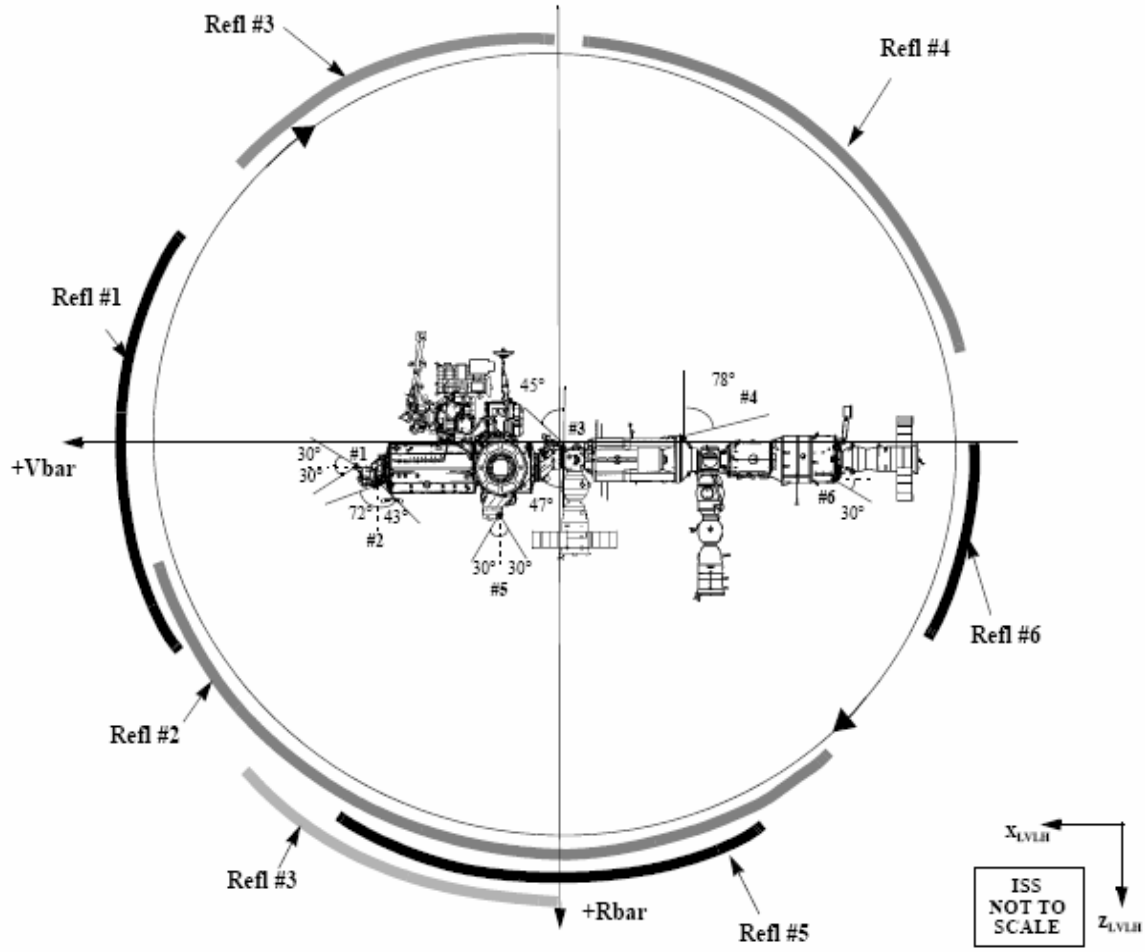

Notes

1. Refl #3 becomes less visible as Orbiter Y_{LVLH} position becomes more positive (into the page)
2. Refl #5 (on PMA 3) may be aquired before Refl #2
3. Flyaround between 600 - 700 ft
4. Some arrays and radiator are not shown for clairty of the TCS information
5. ISS is not to scale

INITIAL RADAR ACQ 10A

GNC 33 REL NAV

CRT √INH RNG, ITEM 18 - (*)
√RDOT, ITEM 21 - (*)
√Angles, ITEM 24 - (*)
KU ANT ENA - ITEM 2 EXEC (*)
GNC I/O RESET
√SV SEL, ITEM 4 - (FLTR)
RADAR - ITEM 13 EXEC (*)

SM ANTENNA

CRT RDR RNG MIN - ITEM 17 EXEC (*)

A2 DIGI-DIS sel - R/RDOT
A1U KU PWR - STBY
MODE - RR PASSIVE
RADAR OUTPUT - LO
√sel - GPC
CNTL - PNL (wait 3 seconds)
PWR - ON

IF NO RADAR LOCK-ON WITHIN 2 MIN

KU sel - AUTO TRK
SLEW EL,AZ to 0,0 deg

KU SEARCH - SEARCH (tb–gray)

When lock on occurs:

GNC 33 REL NAV

CRT AUT RNG - ITEM 17 EXEC (*)
RDOT - ITEM 20 EXEC (*)
Angles - ITEM 23 EXEC (*)
If RATIO > 1.0,
Force aff mark until RATIO < 1.0

When RESIDs small and stable,

SM ANTENNA
RDR RNG AUTO - ITEM 16 EXEC (*)

MANEUVER PADS

PRELIMINARY ORBIT MANEUVER PAD FOR NH

OMS BOTH 1
L 2
R 3
RCS SEL 4 — +X / -X / MULTI-AXIS

TV ROLL 5

TRIM LOAD P 6 ( ) .
LY 7 ( ) .
RY 8 ( ) .

WT 9

TIG 10 / : :

TGT PEG 7 ΔVX 19 ( ) .
ΔVY 20 ( ) .
ΔVZ 21 ( ) .

BURN ATT
R 24
P 25
Y 26

ΔVTOT .
TGO :

VGO X ( ) .
VGO Y ( ) .
VGO Z ( ) .

TGT HA HP ( )

NOTES

OMS GMBL CK:

	PRE	POST-BURN
L PRI		
L SEC		
R PRI		
R SEC		
NONE		

RCS I'CNCT:
- L OMS → RCS
- R OMS → RCS
- NONE

DOWN MODE OPTIONS:
- 2 OMS → 1 OMS
- 1 OMS → RCS
- NONE

OMS HE REG TEST: NONE

	L GPC	L OP	L CL	R GPC	R OP	R CL
A						
B						

-X RCS BURNS:

	BURN ATT				LVLH ATT		
P 15				R			
Y 16				P			
OM 17				Y			

ORBIT BURN MONITOR

GPC FILL-INS __ (__)
- CRIT BURN
- NON-CRIT BURN

MAX TIG SLIP ___ MIN
- DO NOT UPDATE TIG
- UPDATE TIG AFTER ___ MIN

NOTES

FINAL ORBIT MANEUVER PAD FOR NH

OMS BOTH 1
L 2
R 3
RCS SEL 4 — +X / -X / MULTI-AXIS

TV ROLL 5

TRIM LOAD P 6 ( ) .
LY 7 ( ) .
RY 8 ( ) .

WT 9

TIG 10 / : : .

TGT PEG 7 ΔVX 19 ( ) .
ΔVY 20 ( ) .
ΔVZ 21 ( ) .

BURN ATT
R 24
P 25
Y 26

ΔVTOT .
TGO :

VGO X ( ) .
VGO Y ( ) .
VGO Z ( ) .

TGT HA HP ( )

NOTES

OMS GMBL CK:

	PRE	POST-BURN
L PRI		
L SEC		
R PRI		
R SEC		
NONE		

RCS I'CNCT:
- L OMS → RCS
- R OMS → RCS
- NONE

DOWN MODE OPTIONS:
- 2 OMS → 1 OMS
- 1 OMS → RCS
- NONE

OMS HE REG TEST: NONE

	L GPC	L OP	L CL	R GPC	R OP	R CL
A						
B						

-X RCS BURNS:

	BURN ATT				LVLH ATT		
P 15				R			
Y 16				P			
OM 17				Y			

ORBIT BURN MONITOR

GPC FILL-INS __ (__)
- CRIT BURN
- NON-CRIT BURN

MAX TIG SLIP ___ MIN
- DO NOT UPDATE TIG
- UPDATE TIG AFTER ___ MIN

NOTES

PRELIMINARY ORBIT MANEUVER PAD FOR NC

OMS BOTH 1
L 2
R 3
RCS SEL 4 — +X / -X / MULTI-AXIS

TV ROLL 5

TRIM LOAD P 6 ( ) .
LY 7 ( ) .
RY 8 ( ) .

WT 9

TIG 10 / : :

TGT PEG 7 ΔVX 19 ( ) .
ΔVY 20 ( ) .
ΔVZ 21 ( ) .

BURN ATT
R 24
P 25
Y 26

ΔVTOT .
TGO :

VGO X ( ) .
VGO Y ( ) .
VGO Z ( ) .

TGT HA HP ( )

NOTES

OMS GMBL CK:

	PRE	POST-BURN
L PRI		
L SEC		
R PRI		
R SEC		
NONE		

RCS I'CNCT:
- L OMS → RCS
- R OMS → RCS
- NONE

DOWN MODE OPTIONS:
- 2 OMS → 1 OMS
- 1 OMS → RCS
- NONE

OMS HE REG TEST: NONE

	L GPC	L OP	L CL	R GPC	R OP	R CL
A						
B						

-X RCS BURNS:

	BURN ATT				LVLH ATT		
P 15				R			
Y 16				P			
OM 17				Y			

ORBIT BURN MONITOR

GPC FILL-INS __ (__)
- CRIT BURN
- NON-CRIT BURN

MAX TIG SLIP ___ MIN
- DO NOT UPDATE TIG
- UPDATE TIG AFTER ___ MIN

NOTES

FINAL ORBIT MANEUVER PAD FOR NC

OMS BOTH 1
L 2
R 3
RCS SEL 4 — +X / -X / MULTI-AXIS

TV ROLL 5

TRIM LOAD P 6 ( ) .
LY 7 ( ) .
RY 8 ( ) .

WT 9

TIG 10 / : : .

TGT PEG 7 ΔVX 19 ( ) .
ΔVY 20 ( ) .
ΔVZ 21 ( ) .

BURN ATT
R 24
P 25
Y 26

ΔVTOT .
TGO :

VGO X ( ) .
VGO Y ( ) .
VGO Z ( ) .

TGT HA HP ( )

NOTES

OMS GMBL CK:

	PRE	POST-BURN
L PRI		
L SEC		
R PRI		
R SEC		
NONE		

RCS I'CNCT:
- L OMS → RCS
- R OMS → RCS
- NONE

DOWN MODE OPTIONS:
- 2 OMS → 1 OMS
- 1 OMS → RCS
- NONE

OMS HE REG TEST: NONE

	L GPC	L OP	L CL	R GPC	R OP	R CL
A						
B						

-X RCS BURNS:

	BURN ATT				LVLH ATT		
P 15				R			
Y 16				P			
OM 17				Y			

ORBIT BURN MONITOR

GPC FILL-INS __ (__)
- CRIT BURN
- NON-CRIT BURN

MAX TIG SLIP ___ MIN
- DO NOT UPDATE TIG
- UPDATE TIG AFTER ___ MIN

NOTES

PRELIMINARY ORBIT MANEUVER PAD FOR Ti

OMS BOTH 1
L 2
R 3
RCS SEL 4 — +X / -X / MULTI-AXIS

TV ROLL 5

TRIM LOAD P 6 ( ) .
LY 7 ( ) .
RY 8 ( ) .

WT 9

TIG 10 / : : .

TGT PEG 7 ΔVX 19 ( ) .
ΔVY 20 ( ) .
ΔVZ 21 ( ) .

BURN ATT
R 24
P 25
Y 26

ΔVTOT .
TGO :

VGO X ( ) .
VGO Y ( ) .
VGO Z ( ) .

TGT HA HP ( )

OMS GMBL CK:

	PRE	POST-BURN
L PRI		
L SEC		
R PRI		
R SEC		
NONE		

NOTES

RCS I'CNCT:
- L OMS → RCS
- R OMS → RCS
- NONE

DOWN MODE OPTIONS:
- 2 OMS → 1 OMS
- 1 OMS → RCS
- NONE

OMS HE REG TEST: NONE

	L GPC	L OP	L CL		R GPC	R OP	R CL
A				A			
B				B			

-X RCS BURNS:

	BURN ATT				LVLH ATT		
P 15				R			
Y 16				P			
OM 17				Y			

ORBIT BURN MONITOR

GPC FILL-INS __ (__)

- CRIT BURN
- NON-CRIT BURN

TIDELAY

TGT PEG 7 ΔVX 19 ( ) .
ΔVY 20 ( ) .
ΔVZ 21 ( ) .

NEW Ti (BASETIME) / : : .

TIG SLIP: If Ti not started by nominal TIG + ___ min, go to Ti DELAY, 5-27

Max Ti DELAY TIG slip ___ min
- DO NOT UPDATE TIG
- UPDATE TIG AFTER ___ MIN

NOTES

FINAL ORBIT MANEUVER PAD FOR Ti

OMS BOTH 1
L 2
R 3
RCS SEL 4 — +X / -X / MULTI-AXIS

TV ROLL 5

TRIM LOAD P 6 ( ) .
LY 7 ( ) .
RY 8 ( ) .

WT 9

TIG 10 / : : .

TGT PEG 7 ΔVX 19 ( ) .
ΔVY 20 ( ) .
ΔVZ 21 ( ) .

BURN ATT
R 24
P 25
Y 26

ΔVTOT .
TGO :

VGO X ( ) .
VGO Y ( ) .
VGO Z ( ) .

TGT HA HP ( )

OMS GMBL CK:

	PRE	POST-BURN
L PRI		
L SEC		
R PRI		
R SEC		
NONE		

NOTES

RCS I'CNCT:
- L OMS → RCS
- R OMS → RCS
- NONE

DOWN MODE OPTIONS:
- 2 OMS → 1 OMS
- 1 OMS → RCS
- NONE

OMS HE REG TEST: NONE

	L GPC	L OP	L CL		R GPC	R OP	R CL
A				A			
B				B			

-X RCS BURNS:

	BURN ATT				LVLH ATT		
P 15				R			
Y 16				P			
OM 17				Y			

ORBIT BURN MONITOR

GPC FILL-INS __ (__)

- CRIT BURN
- NON-CRIT BURN

TIDELAY

TGT PEG 7 ΔVX 19 ( ) .
ΔVY 20 ( ) .
ΔVZ 21 ( ) .

NEW Ti (BASETIME) / : : .

TIG SLIP: If Ti not started by nominal TIG + ___ min, go to Ti DELAY, 5-27

Max Ti DELAY TIG slip ___ min
- DO NOT UPDATE TIG
- UPDATE TIG AFTER ___ MIN

NOTES

ORBIT MANEUVER PAD FOR _____

OMS BOTH 1
L 2
R 3
RCS SEL 4 — +X / -X / MULTI-AXIS

TV ROLL 5

TRIM LOAD P 6 ( ) .
LY 7 ( ) .
RY 8 ( ) .

WT 9

TIG 10 / : : .

TGT PEG 7 ΔVX 19 ( ) .
ΔVY 20 ( ) .
ΔVZ 21 ( ) .

BURN ATT
R 24
P 25
Y 26

ΔVTOT .
TGO :

VGO X ( ) .
VGO Y ( ) .
VGO Z ( ) .

TGT HA HP ( )

NOTES

OMS GMBL CK:

	PRE	POST-BURN
L PRI		
L SEC		
R PRI		
R SEC		
NONE		

RCS I'CNCT:
- L OMS → RCS
- R OMS → RCS
- NONE

DOWN MODE OPTIONS:
- 2 OMS → 1 OMS
- 1 OMS → RCS
- NONE

OMS HE REG TEST: NONE

	L GPC	L OP	L CL	R GPC	R OP	R CL
A						
B						

-X RCS BURNS:

	BURN ATT				LVLH ATT		
P 15				R			
Y 16				P			
OM 17				Y			

ORBIT BURN MONITOR

GPC FILL-INS __ (__)
- CRIT BURN
- NON-CRIT BURN

MAX TIG SLIP ___ MIN
- DO NOT UPDATE TIG
- UPDATE TIG AFTER ___ MIN

NOTES

ORBIT MANEUVER PAD FOR _____

OMS BOTH	1	
L	2	
R	3	
RCS SEL	4	+X / -X / MULTI-AXIS
TV ROLL	5	
TRIM LOAD P	6	( ) .
LY	7	( ) .
RY	8	( ) .
WT	9	
TIG	10	/ : : .
TGT PEG 7 ΔVX	19	( ) .
ΔVY	20	( ) .
ΔVZ	21	( ) .

BURN ATT

R	24	
P	25	
Y	26	

ΔVTOT	.
TGO	:

VGO	X	( ) .
VGO	Y	( ) .
VGO	Z	( ) .

	HA	HP
TGT		( )

OMS GMBL CK:

	PRE	POST-BURN
L PRI		
L SEC		
R PRI		
R SEC		
NONE		

NOTES

RCS I'CNCT:

- L OMS → RCS
- R OMS → RCS
- NONE

DOWN MODE OPTIONS:

- 2 OMS → 1 OMS
- 1 OMS → RCS
- NONE

OMS HE REG TEST: NONE

	L GPC	L OP	L CL	R GPC	R OP	R CL
A						
B						

-X RCS BURNS:

	BURN ATT				LVLH ATT		
P 15				R			
Y 16				P			
OM 17				Y			

ORBIT BURN MONITOR

GPC FILL-INS __ (__)

- CRIT BURN
- NON-CRIT BURN

MAX TIG SLIP ___ MIN

- DO NOT UPDATE TIG
- UPDATE TIG AFTER ___ MIN

NOTES

ORBIT MANEUVER PAD FOR _____

OMS BOTH 1
L 2
R 3
RCS SEL 4 — +X / -X / MULTI-AXIS

TV ROLL 5

TRIM LOAD P 6 ( ) .
LY 7 ( ) .
RY 8 ( ) .

WT 9

TIG 10 / : : .

TGT PEG 7 ΔVX 19 ( ) .
ΔVY 20 ( ) .
ΔVZ 21 ( ) .

BURN ATT
R 24
P 25
Y 26

ΔVTOT .
TGO :

VGO X ( ) .
VGO Y ( ) .
VGO Z ( ) .

TGT HA HP ( )

OMS GMBL CK:

	PRE	POST-BURN
L PRI		
L SEC		
R PRI		
R SEC		
NONE		

NOTES

RCS I'CNCT:
- L OMS → RCS
- R OMS → RCS
- NONE

DOWN MODE OPTIONS:
- 2 OMS → 1 OMS
- 1 OMS → RCS
- NONE

OMS HE REG TEST: NONE

	L GPC	L OP	L CL	R GPC	R OP	R CL
A						
B						

-X RCS BURNS:

	BURN ATT				LVLH ATT		
P 15				R			
Y 16				P			
OM 17				Y			

ORBIT BURN MONITOR

GPC FILL-INS __ (__)
- CRIT BURN
- NON-CRIT BURN

MAX TIG SLIP ___ MIN
- DO NOT UPDATE TIG
- UPDATE TIG AFTER ___ MIN

NOTES

ORBIT MANEUVER PAD FOR _____

OMS BOTH 1
L 2
R 3
RCS SEL 4 — +X / -X / MULTI-AXIS

TV ROLL 5

TRIM LOAD P 6 ( ) .
LY 7 ( ) .
RY 8 ( ) .

WT 9

TIG 10 / : : .

TGT PEG 7 ΔVX 19 ( ) .
ΔVY 20 ( ) .
ΔVZ 21 ( ) .

BURN ATT
R 24
P 25
Y 26

ΔVTOT .
TGO :

VGO X ( ) .
VGO Y ( ) .
VGO Z ( ) .

TGT HA HP ( )

OMS GMBL CK:

	PRE	POST-BURN
L PRI		
L SEC		
R PRI		
R SEC		
NONE		

NOTES

RCS I'CNCT:
- L OMS → RCS
- R OMS → RCS
- NONE

DOWN MODE OPTIONS:
- 2 OMS → 1 OMS
- 1 OMS → RCS
- NONE

OMS HE REG TEST: NONE

	L GPC	L OP	L CL	R GPC	R OP	R CL
A						
B						

-X RCS BURNS:

	BURN ATT				LVLH ATT		
P 15				R			
Y 16				P			
OM 17				Y			

ORBIT BURN MONITOR

GPC FILL-INS __ (__)
- CRIT BURN
- NON-CRIT BURN

MAX TIG SLIP ___ MIN
- DO NOT UPDATE TIG
- UPDATE TIG AFTER ___ MIN

NOTES

ORBIT MANEUVER PAD FOR _____

OMS BOTH 1
L 2
R 3
RCS SEL 4 — +X / -X / MULTI-AXIS

TV ROLL 5

TRIM LOAD P 6 ( ) .
LY 7 ( ) .
RY 8 ( ) .

WT 9

TIG 10 / : : .

TGT PEG 7 ΔVX 19 ( ) .
ΔVY 20 ( ) .
ΔVZ 21 ( ) .

BURN ATT
R 24
P 25
Y 26

ΔVTOT .
TGO :

VGO X ( ) .
VGO Y ( ) .
VGO Z ( ) .

TGT HA HP ( )

OMS GMBL CK:

	PRE	POST-BURN
L PRI		
L SEC		
R PRI		
R SEC		
NONE		

NOTES

RCS I'CNCT:
- L OMS → RCS
- R OMS → RCS
- NONE

DOWN MODE OPTIONS:
- 2 OMS → 1 OMS
- 1 OMS → RCS
- NONE

OMS HE REG TEST: NONE

	L GPC	L OP	L CL	R GPC	R OP	R CL
A						
B						

-X RCS BURNS:

	BURN ATT				LVLH ATT		
P 15				R			
Y 16				P			
OM 17				Y			

ORBIT BURN MONITOR

GPC FILL-INS __ (__)
- CRIT BURN
- NON-CRIT BURN

MAX TIG SLIP ___ MIN
- DO NOT UPDATE TIG
- UPDATE TIG AFTER ___ MIN

NOTES

RENDEZVOUS TIMELINE

This Page Intentionally Blank

THIS PAGE INTENTIONALLY BLANK

AFT FLT STATION CONFIG FOR RNDZ 4A

O14,16:E √cb MNA,C DDU AFT (two) - cl

A6U ADI ATT - LVLH
ERR - MED
RATE - MED
SENSE - minus Z

R13 √KU ANT - GND
A1U PWR - STBY
sel - MAN SLEW
MODE - RDR PASSIVE
RADAR OUTPUT - HI
CNTL - PNL (wait 3 seconds)
PWR - ON
SIG STRENGTH sel - KU
SLEW RATE - as reqd

A2 DIGI-DIS sel - R/RDOT
X-PNTR SCALE - X1

SM ANTENNA

CRT SELF TEST - ITEM 7 EXEC (*)

NOTE
SELF TEST runs about 3 min

A1U √KU SCAN WARN tb - gray
√TRACK tb - gray
√SEARCH tb - gray
A2 √RANGE - 888.8
DIGI-DIS sel - EL/AZ

CRT SELF TEST - ITEM 7 EXEC (no *)

A1U KU MODE - COMM
sel - GPC
CNTL - CMD

Install:
-Z COAS
RCS BURN Cue Card
KU OPS Cue Card
APPROACH Cue Card
TARGET ALIGNMENT Cue Card
DOCKING SEQUENCE Cue Card
Velcro over Aft DAP PCT pbi (SPARE pbi)

PET

-03:00

CDR AFT FLT STATION CONFIG FOR RNDZ 4A

A7(B7) PLT RNDZ OPS INITIALIZATION 5A

MCC UPDATE
Final NH Burn Pad, 3-5 (if reqd)

MCC UPLINK
ORB SV
TGT SV
Drag K-factor

-02:55

MS Perform 6.105 SSOR ACTIVATION, steps 1 and 2 (SODF: JOINT OPS, COMM/DATA)

-02:50

CDR If NH reqd:
If OMS BURN, Perform RNDZ OMS BURN, steps 1-4 (CONTINGENCY OPS), 5-4
If +X RCS burn, Perform RCS BURN, steps 1-5 (Cue Card)

Postburn DAP: A/LVLH/VERN(ALT)

-02:45

-02:40

-02:35

-02:30

RNDZ OPS INITIALIZATION 5A

√DPS Config for Rndz Ops - String 1233

SM 2 TIME

Set SM TIMER counting to Ti TIG per burn Pad, 3-6

Config DAP A,B to A7,B7

Record nominal TIGs in burn solution blocks per Execute Package:

NCC TIG	pg 4-11
MC1 TIG	pg 4-17
MC2 TIG	pg 4-18

GNC 55 GPS STATUS

DES RCVR,		ITEM 27 - (*)
√INH GPS to	G&C,	ITEM 33 - (*)
	NAV,	ITEM 36 - (*)

THIS PAGE INTENTIONALLY BLANK

PET

-02:30

A7(B7)

← TIG-5 MIN

-02:25

If reqd,

← NH TIG

Postburn DAP: A/LVLH/VERN(ALT)

-02:20

-02:15

PLT ENABLE RENDEZVOUS NAV 7A

MS √PGSCs setup per PGSC Usage Chart (if available) or UTILITY OUTLET PLUG-IN
PLAN ORBIT CONFIGURATION (REF DATA FS, UTIL PWR)

PLT, MS On RPOP PGSCs:
Perform RPOP INITIALIZATION (RNDZ TOOLS), 7-8, then
Perform RPOP OPS (RNDZ TOOLS), 7-9, then
Perform TCS ACTIVATION, step 1 (RNDZ TOOLS), 7-18

-02:10

MS Perform HHL CHECKOUT (RNDZ TOOLS), 7-6

-02:05

MCC UPDATE
Final NC Burn Pad, 3-3

-02:00

ENABLE RENDEZVOUS NAV 7A

1. GNC 33 REL NAV

CRT RNDZ NAV ENA - ITEM 1 EXEC (*)
√SV SEL, ITEM 4 - PROP
√S TRK, ITEM 12 - (*)

2. GNC 34 ORBIT TGT
TGT NO - ITEM 1 +1 EXEC
Set BASE TIME to Ti TIG, (Ti Burn Pad, 3-6)
LOAD - ITEM 26 EXEC

THIS PAGE INTENTIONALLY BLANK

PET

-02:00

A7(B7)

CDR LOAD TARGET TRACK 9A

NOTE

If NH performed, delay mnvr to NC burn attitude until NC TIG - 5 min to minimize attitude mnvr

MCC UPDATE

STAR TRK NAV

IMU DES ____

10A , 4-10

CDR If OMS BURN, Perform RNDZ OMS BURN, steps 1-4 (CONTINGENCY OPS), 5-4

If +X RCS burn, Perform RCS BURN, steps 1-5 (Cue Card)

-01:55

-01:50

-01:45

-01:40

← TIG-5 MIN

-01:35

← NC TIG

CDR INITIATE TARGET TRACK 9B

PLT TARGET NCC BURN 11A (Preliminary), 4-11

-01:30

LOAD TARGET TRACK 9A

√DAP: A/LVLH/VERN(ALT)

GNC UNIV PTG

CRT CNCL - ITEM 21 EXEC

TGT ID +1

	-Z AXIS	-Y STRK
BODY VECT	+3 (-Z)	+4
P	√+90	√+0
Y	√+0	√+280.57
OM	+0	+90

Do not INITIATE TARGET TRACK 9B until post NC

INITIATE TARGET TRACK 9B

GNC UNIV PTG

TRK - ITEM 19 EXEC (CUR - *)

DAP: B/AUTO/ALT

When MNVR cmplt,

DAP: A/AUTO/VERN(ALT)

STAR TRACKER NAV [10A]

1. CONFIG FOR STRK NAV

√DAP: A/AUTO/VERN(ALT)

Turn down cabin lights to optimize target viewing through -Z COAS/overhead window

IMU for Deselect _____ (If no comm, use IMU 1 for deselect)

[GNC 21 IMU ALIGN]

CRT IMU DES - ITEM 7(8,9) EXEC (*)

√MCC for NAV selected IMU _____

[GNC 33 REL NAV]

If first NAV pass,
│ √SV SEL, ITEM 4 - PROP
If previous NAV,
√SV SEL, ITEM 4 - FLTR

√INH Angles, ITEM 24 - (*)

√S TRK, ITEM 12 - (*)

[GNC 22 S TRK/COAS CNTL]

-Y THOLD – ITEM 13 +3 EXEC

-Z THOLD – ITEM 14 +3 EXEC

-Z (-Y) TGT TRK - ITEM 6(5) EXEC (*)

√STATUS - blank

√SHUTTER - op

2. INITIAL MEASUREMENT EVALUATION

[GNC 22 S TRK/COAS CNTL]

When S PRES - (*), continue

[GNC 33 REL NAV]

Monitor RESID V and H each NAV cycle for at least four consecutive cycles (~30 sec)

Record init RESID V = _____ _____ _____ _____

H = _____ _____ _____ _____

If RESID V or H changes by > 0.05 each cycle:
│ [GNC 22 S TRK/COAS CNTL]
│ -Z(-Y) BREAK TRK - ITEM 8(7) EXEC
│ Repeat Step 2

If RESID V or H > 0.6:
[GNC 22 S TRK/COAS CNTL]
-Z(-Y) BREAK TRK - ITEM 8(7) EXEC
When S PRES - (*), if RESID V or H still > 0.6 and stable:
Perform S TRK NAV - HIGH INITIAL RESID (CONTINGENCY OPS), 5-8

3. INCORPORATE DATA INTO NAV

If SV SEL = PROP:
│ AUTO Angles - ITEM 23 EXEC (*)
│ Record 1st SV UPDATE POS = _____ _____ _____ _____
│ When SV UPDATE POS < 1.0 and Angle ACPT > 9:
│ SV SEL - ITEM 4 EXEC (FLTR) >>

If SV = FLTR:
FLTR TO PROP - ITEM 8 EXEC
AUTO Angles - ITEM 23 EXEC (*)
Record 1st SV UPDATE POS = _____ _____ _____ _____

* If FLTR MINUS PROP changes by more than 8 kft within a S TRK pass: *
* Perform S TRK NAV - HIGH FLTR MINUS PROP *
* (CONTINGENCY OPS), 5-9 *

END S TRK NAV [10B]

[GNC 33 REL NAV]

CRT INH Angles - ITEM 24 EXEC (*)

[GNC 21 IMU ALIGN]

IMU DES - ITEM 7(8,9) EXEC (no *)

PET

-01:30

A7(B7)

PLT STAR TRACKER NAV 10A

MCC UPDATE
Nav Selected IMU___

-01:25

MCC UPDATE
Ground NCC Burn Solution

When NAV converged (SV UPDATES small and stable):

-01:20

CDR TARGET NCC BURN 11A (Intermediate)

-01:15

-01:10

```
                                  ************************************************************
← TIG-10 MIN  √MCC for burn type  * If no comm                                             *
                                  *    If ΔVT > 6 fps:                                       *
                                  *    |   END S TRK NAV  10B                                *
                                  *    |   TARGET NCC BURN  11A  (Final)                     *
                                  *    |   Perform RNDZ OMS BURN (CONTINGENCY OPS), 5-4      *
                                  *    If ΔVT > 4 fps:                                       *
                                  *        END S TRK NAV  10B                                *
PLT END S TRK NAV 10B             *        TARGET NCC BURN  11A  (Final)                     *
                                  *        Perform +X Burn, RCS BURN (Cue Card)              *
← TIG-5 MIN                       ************************************************************
PLT TARGET NCC BURN 11A (Final)
```

-01:05

CDR Perform RCS BURN (Cue Card)

-01:00

TARGET NCC BURN 11A

FINAL SOLUTION
OPS 202 PRO
GNC ORBIT MNVR EXEC
√Eng Sel CORRECT

CRT √SV SEL correct
GNC 34 ORBIT TGT
TGT NO - ITEM 1 +9 EXEC
√TGT Set data:
T1 TIG = NCC BURN SOLUTION TIG
EL +0
ΔT +57.7
ΔX -48.6
ΔY +0.0
ΔZ +1.2
COMPUTE T1 - ITEM 28 EXEC
Record solution in PAD

FINAL SOLUTION
If > 40 marks in current sensor pass and
SV UPDATE POS < 0.5 for the last 4 marks:
| Burn FLTR soln
If FLTR within ground solution limits:
| Burn FLTR soln
If PROP within ground solution limits:
| Burn PROP soln
If none of the above:
Burn ground soln EXT ΔVs

NCC BURN SOLUTION

TIG ___ / ___ : ___ : ___

	PRELIMINARY	INTERMEDIATE	FINAL	GROUND	FINAL - GROUND LIMITS
ΔVX	( ) .	( ) .	( ) .	( ) .	(0.5)
ΔVY	( ) .	( ) .	( ) .	( ) .	(1.4)
ΔVZ	( ) .	( ) .	( ) .	( ) .	(1.7)
ΔVT	.	.	.	.	

-Z AXIS TARGET TRACK 12A

		GNC UNIV PTG	
CRT	√	TGT ID	+1
		BODY VECT	+3 (-Z)
		OM	+0
C3		DAP: B/AUTO/ALT	
CRT		TRK - ITEM 19 EXEC (CUR - *)	
		When MNVR cmplt, DAP: A/AUTO/VERN(ALT)	

PET

-01:00

A7(B7)

← NCC TIG

-00:55

PLT TARGET Ti BURN 13A (Preliminary)

MCC UPDATE
RNDZ PRPLT PAD

IF Y S TRK TRACK

CDR -Z AXIS TARGET TRACK 12A

-00:50

When:
GNC 33 REL NAV
NAV RNG < 150 KFT:

MS KU OPS, step 1 (Cue Card)

-00:45

If no lock-on by
10 minutes after initial search:

MS KU OPS, step 2 (Cue Card)

-00:40

When RR RNG < 135 KFT:

PLT Perform RR NAVIGATION 13B

-00:35

When NAV converged (SV UPDATES small and stable):

PLT TARGET Ti BURN 13A (Intermediate)

-00:30

TARGET Ti BURN 13A

CRT √SV SEL correct
GNC 34 ORBIT TGT
TGT NO - ITEM 1 +1 0 EXEC
√TGT Set data:
T1 TIG = BASE TIME
EL +0
ΔT +76.9
ΔX -0.9
ΔY +0
ΔZ +1.8
COMPUTE T1 - ITEM 28 EXEC
Record solution in PAD

RR NAVIGATION 13B

GNC 33 REL NAV

CRT RR - ITEM 13 EXEC (*)
√Elev, Az approx 0

Record Initial RESID RANGE = _____
RDOT = _____

IF RESID RANGE > 5.0 or
RDOT > 3.0

SV SEL - ITEM 4 EXEC (PROP)
Proceed with taking data and contact MCC
as soon as practical

FLTR TO PROP - ITEM 8 EXEC
AUTO RNG - ITEM 17 EXEC (*)
RDOT - ITEM 20 EXEC (*)
Angles - ITEM 23 EXEC (*)

Record 1st SV UPDATE POS = _____

IF SV SEL = PROP
When SV UPDATE POS < 0.3 and MARK ACPT > 9:
SV SEL - ITEM 4 EXEC (FLTR)

Ti BURN SOLUTIONS

PREL FLTR	INTER FLTR	FINAL FLTR	GND	PROP (If Reqd)
( ) .	( ) .	( ) .	( ) .	( ) .
( ) .	( ) .	( ) .	( ) .	( ) .
( ) .	( ) .	( ) .	( ) .	( ) .
.	.	.	.	.

FINAL Ti Burn Pad, 3-7

FINAL - GROUND LIMITS	
ΔVX	(0.6)
ΔVY	(1.1)
ΔVZ	(0.9)

PET

-00:30

A7(B7)

-00:25

√MCC for burn type. If no comm:
If ΔVT > 6, at TIG-17:
Perform RNDZ OMS BURN (CONTINGENCY OPERATIONS), 5-4
If 4 ≤ ΔVT ≤ 6, at TIG-17:
Perform +X RCS burn, RCS BURN (Cue Card)
If ΔVT< 4, at TIG-5:
Perform multi-axis RCS burn, RCS BURN (Cue Card)

MCC UPDATE
Ti Final Ground Soln,
Ti DELAY Soln, 3-7

-00:20

If GO for Ti not received by TIG - 5 or RNDZ DELAY called by MCC
CDR Perform Ti DELAY BURN (CONTINGENCY OPS), 5-27

-00:15

TIG-17
If Ti is multi-axis burn, delay final targeting until TIG-5
PLT TARGET Ti BURN 15A (Final)
If Ti is +X RCS burn:
CDR Perform RCS BURN (Cue Card)
If Ti is OMS BURN:
Perform RNDZ OMS BURN (CONTINGENCY OPERATIONS), 5-4

MCC UPDATE
GO for Ti

-00:10

-00:05

TIG-5
If Ti is multi-axis burn:
CDR Perform RCS BURN (Cue Card)

00:00

Ti TIG

TARGET Ti BURN 15A (Final)

CRT OPS 202 PRO
GNC ORBIT MNVR EXEC
Load Eng Sel, TVR, WT and Trims for Ti per Final Ti Burn Pad
LOAD - ITEM 22 EXEC
GNC 33 REL NAV
√SV SEL correct
GNC 34 ORBIT TGT
TGT NO - ITEM 1 +1 0 EXEC
√TGT Set data:
T1 TIG = BASE TIME
EL +0
ΔT +76.9
ΔX -0.9
ΔY +0
ΔZ +1.8
COMPUTE T1 - ITEM 28 EXEC

Record solution in PAD

FINAL SOLUTION
If > 40 marks in current sensor pass and
SV UPDATE POS < 0.5 for the last 4 marks:
Burn FLTR soln
If FLTR within ground solution limits:
Burn FLTR soln
If PROP within ground solution limits:
Burn PROP soln
If none of the above:
Burn ground soln EXT ΔVs

POST Ti NAV [16A]

A6U √DAP: A/AUTO/VERN(ALT)
A1U √KU sel - GPC

[GNC 33 REL NAV]
IF SV SEL = FLTR:
FLTR TO PROP - ITEM 8 EXEC (*)
If RR Tracking TGT:
√AUTO Angles - ITEM 23 EXEC (*)
If RR NOT Tracking TGT:
√Inhibit Data
Perform KU OPS, steps 2 and 3 (Cue Card)
If still no RR ACQ, assume RR Fail

[GNC 22 S TRK/COAS CNTL]
CRT √ Z TGT TRK - ITEM 6 EXEC (*)

IF RR FAIL
If -Z Star Tracker:
√-Z TGT TRK ATT, then:
Perform STAR TRACKER NAV [10A]
If COAS NAV:
√-Z TGT TRK ATT, then:
Perform COAS NAVIGATION (CONTINGENCY OPS), 5-10
If -Y Star Tracker:
[GNC UNIV PTG]
TGT ID +1
BODY VECT +4
P √+0
Y √+280.57
OM +90
DAP: B/AUTO/ALT
TRK - ITEM 19 EXEC
When MNVR cmplt:
DAP: A/AUTO/VERN(ALT)
Perform STAR TRACKER NAV [10A]

PET

00:00 — A7(B7)

PLT TARGET MC 1 BURN 17A (Preliminary)

When MNVR to att cmplt:

CDR POST Ti NAV 16A

MCC UPDATE
Prox Ops Cov Matrix

00:05

00:10

When NAV converged, (SV UPDATES small and stable):

PLT TARGET MC 1 BURN 17A (Intermediate)

MS √Time of OOP null

00:15

← TIG-3 MIN

PLT TARGET MC 1 BURN 17A (Final)
Perform RCS BURN (Cue Card)

00:20 ← MC 1 TIG

PLT TARGET MC 2 BURN 17B (Preliminary)

00:25

When Y = 0:

PLT MANUAL OUT-OF-PLANE NULL 19A

00:30

TARGET MC 1 BURN 17A

CRT √SV SEL correct
GNC 34 ORBIT TGT
TGT NO - ITEM 1 +1 1 EXEC
√TGT Set data:
T1 TIG = MC1 BURN SOLUTION TIG
EL +0
ΔT +56.9
ΔX -0.9
ΔY +0
ΔZ +1.8
COMPUTE T1 - ITEM 28 EXEC
Record solution in PAD

MC 1 BURN SOLUTION

TIG ___ / ___ : ___ : ___

	PRELIMINARY	INTERMEDIATE
ΔVX	( ) .	( ) .
ΔVY	( ) .	( ) .
ΔVZ	( ) .	( ) .
ΔVT	.	.

	FINAL	MEAN ± (3σ VARIATION)
ΔVX	( ) .	-0.0 ± (0.5)
ΔVY	( ) .	-0.1 ± (0.5)
ΔVZ	( ) .	+0.0 ± (1.2)
ΔVT	.	

TARGET MC 2 17B (Preliminary)

CRT √SV SEL correct
GNC 34 ORBIT TGT
TGT NO - ITEM 1 +1 2 EXEC
√TGT Set data:
T1 TIG = MC2 BURN SOLUTION TIG
EL +29.07
ΔT +27.0
ΔX -0.9
ΔY +0
ΔZ +1.8
COMPUTE T1 - ITEM 28 EXEC
NOTE
If TGT EL ANG Alarm,
ΔV still valid for current TIG,
TIG slip limits still apply
Record solution in PAD

TARGET MC 2 BURN 18A (Intermediate)

CRT √SV SEL correct
GNC 34 ORBIT TGT
TGT NO - ITEM 1 +1 2 EXEC
COMPUTE T1 - ITEM 28 EXEC
Record solution in PAD

TARGET MC 2 BURN 18B (Final)

CRT √SV SEL correct
GNC 34 ORBIT TGT
TGT NO - ITEM 1 +1 2 EXEC
COMPUTE T1 - ITEM 28 EXEC
√TIG change

IF TIG CHANGE < -3 OR > +7 MIN

Set BASE TIME to (Nominal MC 2 TIG -3 or +7 min as appropriate)
LOAD - ITEM 26 EXEC
TGT NO - ITEM 1 +1 9 EXEC
√TGT Set data:
T1 TIG = BASE TIME
EL +0
ΔT +27.0
ΔX -0.9
ΔY +0
ΔZ +1.8
COMPUTE T1 - ITEM 28 EXEC

Set EVENT TIMER counting to MC 2 TIG
Record solution in PAD
GNC 33 REL NAV
CRT FLTR TO PROP - ITEM 8 EXEC

MC 2 BURN SOLUTION

	PRELIMINARY	INTERMEDIATE
ΔVX	( ) .	( ) .
ΔVY	( ) .	( ) .
ΔVZ	( ) .	( ) .
ΔVT	.	.

	FINAL	MEAN ± (3σ VARIATION)
ΔVX	( ) .	+0.1 ± (0.4)
ΔVY	( ) .	+0.0 ± (0.2)
ΔVZ	( ) .	+0.8 ± (3.4)
ΔVT	.	

	TIG	TIG SLIP (COMPUTED-NOM)
PREL	/ : :	:
INTER	/ : :	:
FINAL	/ : :	:
NOMINAL	/ : :	

END S TRK NAV 18C

GNC 33 REL NAV
CRT INH Angles - ITEM 24 EXEC (*)

GNC 21 IMU ALIGN
IMU DES - ITEM 7(8,9) EXEC (no *)

-Z AXIS TARGET TRACK 18D

GNC UNIV PTG
CRT √TGT ID +1
BODY VECT +3 (-Z)
OM +0
C3 DAP: B/AUTO/ALT
CRT TRK - ITEM 19 EXEC (CUR - *)

When MNVR cmplt,
DAP: A/AUTO/VERN(ALT)

NIGHTTIME STRK OPS 18E

1. GNC 33 REL NAV
INH Angles - ITEM 24 EXEC (*)

At sunset,

2. GNC 22 S TRK/COAS CNTL
-Z(-Y) THOLD - ITEM 14(13) +0 EXEC

3. Perform STAR TRACKER NAV 10A , steps 2 and 3

PET

00:30

A7(B7)

MS Perform 6.105 SSOR ACTIVATION, step 3 (SODF: JOINT OPS, COMM/DATA)

IF S TRK NAV
At sunset-2 minutes:
PLT NIGHTTIME STRK OPS 18E

00:35

PLT When NAV converged (SV UPDATES small and stable):
TARGET MC 2 BURN 18A (Intermediate)

MS Perform CCTV CONFIG FOR DOCKING/UNDOCKING (RNDZ TOOLS), 7-2

MS When RNG < 30,000 ft:
SSOR comm check with ISS

MC2 ET

00:40 -00:10

On RPOP PGSC:
MS Perform TCS ACTIVATION, steps 2-4 (RNDZ TOOLS), 7-18
(Set AUTO ACQ to 10,000 ft)

00:45 -00:05 ←

TIG-5 MIN
PLT TARGET MC 2 BURN 18B (Final)
Perform RCS BURN (Cue Card)

00:50 00:00 ← MC 2 TIG

PLT TARGET MC 3 BURN 19B (Preliminary)

IF INITIAL RR ACQ POST-MC2
CDR Perform LATE RR NAV 20E

00:55 00:05

IF -Y S TRK TRACK
PLT END STAR TRACKER NAV 18C
-Z AXIS TARGET TRACK 18D

If S TRK NAV,
PLT END STAR TRACKER NAV 18C

01:00 00:10

MANUAL OUT-OF-PLANE NULL 19A

GNC 33 REL NAV
CRT When Y = 0:
F7 FLT CNTLR PWR - ON
DAP: A/AUTO/PRI
DAP TRANS: as reqd

THC: Null YDOT

If -Z AXIS TRACK,
+YDOT = FWD THC left
AFT THC right
If -Y S TRK TRACK,
+YDOT = FWD THC down
AFT THC out

F7 FLT CNTLR PWR - OFF
DAP: A/AUTO/ALT
When rates nulled:
DAP: VERN(ALT)

TARGET MC 3 19B

CRT √SV SEL correct
GNC 34 ORBIT TGT
TGT NO - ITEM 1 +1 3 EXEC
√TGT Set data:
T1 TIG = BASE TIME + 0/00:17:00
EL +0
ΔT +10.0
ΔX -0.9
ΔY +0
ΔZ +1.8
COMPUTE T1 - ITEM 28 EXEC
Record solution in PAD

MC 3 BURN SOLUTION

TIG ___ / ___ : ___ : ___

	PRELIMINARY	FINAL	MEAN ± (3σ VARIATION)
ΔVX	( ) .	( ) .	+0.6 ± (1.6)
ΔVY	( ) .	( ) .	+0.0 ± (0.4)
ΔVZ	( ) .	( ) .	+1.2 ± (3.0)
ΔVT	.	.	

MC 4 BURN SOLUTION

TIG [ ][ ][ ] / [ ][ ] : [ ][ ] : [ ][ ]

	PRELIMINARY	FINAL	MEAN ± 3σ VARIATION
ΔVX	( ) .	( ) .	+0.7 ± (2.0)
ΔVY	( ) .	( ) .	-0.0 ± (0.5)
ΔVZ	( ) .	( ) .	+0.1 ± (2.4)
ΔVT	.	.	

TARGET MC 4 BURN [20A]

CRT √SV SEL correct
[GNC 34 ORBIT TGT]
TGT NO - ITEM 1 +1 4 EXEC
√TGT Set data:
T1 TIG = BASE TIME + 0/00:27:00
EL +0
ΔT +13.0
ΔX +0
ΔY +0
ΔZ +0.6
COMPUTE T1 - ITEM 28 EXEC
Record solution in PAD

ESTABLISH RBAR [20C]

A6U FLT CNTLR PWR - ON

[GNC UNIV PTG]
CRT TRK - ITEM 19 EXEC (CUR - *)
DAP: A/AUTO/VERN(PRI)

THC: as reqd to control TGT motion in COAS

CONFIG FOR RBAR [20B]

[GNC UNIV PTG]
√ ERR TOT - ITEM 23 EXEC (*)

When ERR <2 deg each axis
[GNC 20 DAP CONFIG]
Config DAP A,B to A8,B8

[GNC UNIV PTG]
TGT ID +2
BODY VECT +5
P +270
Y +0
OM +0

Do not initiate Target Track until ESTABLISH RBAR [20C]

LATE RADAR NAV [20E]

[GNC 33 REL NAV]
CRT FLTR TO PROP - ITEM 8 EXEC
SV SEL, ITEM 4 - PROP
√RR - ITEM 13 EXEC (*)
AUTO RNG - ITEM 17 EXEC (*)
RDOT - ITEM 20 EXEC (*)
Angles - ITEM 23 EXEC (*)
Go to RADAR FAIL PROCEDURE [20D]

RADAR FAIL PROCEDURE [20D]

Note: When TGT visible, report TGT Tally-Ho to MCC
MS If TGT outside COAS reticle, config CCTV as reqd to measure vertical position

1. At MC2 TIG+14:00 (MC3 TIG-3:00):
PLT TARGET MC3 [19B] (final)
CDR Perform RCS BURN (Cue Card)

AT MC2+18 IF NO VISUAL ACQUISITION OR TARGET > 30 DEG FROM COAS HORIZONTAL
CDR Go to RNDZ BREAKOUT (CONTINGENCY OPS), 5-18 >>

2. At MC2 TIG + 19:00:
A6U FLT CNTLR PWR - ON
√SENSE - -Z
DAP: A/LVLH/PRI
√COAS for TGT vertical position
THC: +X (or -X) per COAS LOGIC:
If TGT = N deg high in COAS, perform 2N +X (up) pulses
If TGT = N deg low in COAS, perform 1N -X (down) pulses
DAP: A/LVLH/VERN(PRI)
Inform MCC of TGT vertical position in COAS and number of pulses performed
Following radar fail X correction,
THC: As reqd to control out of plane motion and manage RDOT
Perform CONFIG FOR RBAR [20B]

3. At MC2 TIG + 24:00 or 2000 ft, whichever comes first:
[GNC UNIV PTG]
CRT TRK - ITEM 19 EXEC (CUR - *)
A6U DAP: A/AUTO/VERN (PRI)
THC: as reqd to stabilize and maintain TGT docking port between 0 and 10 deg high in COAS

At 2000 ft:
Perform APPROACH (Cue Card)

PET	MC2 ET			
01:00	00:10		**IF NO RR INTO NAV**	
A7(B7)		CDR	Go to RADAR FAIL PROCEDURES 20D	
		←	TIG-3 MIN	
01:05	00:15	PLT	TARGET MC3 BURN 19B (Final) Perform RCS BURN (Cue Card)	
		←	MC 3 TIG	CREW REPORT ISS tally-ho
		PLT	TARGET MC 4 BURN 20A (Preliminary)	
A8(B8)		CDR	CONFIG FOR RBAR 20B	
01:10	00:20			
		MS	Perform HHL OPS (RNDZ TOOLS), 7-7	
		←	TIG-3 MIN	HHL REPORT R and Rdot
01:15	00:25	PLT	TARGET MC 4 20A (Final) Perform RCS BURN (Cue Card)	
		←	MC 4 TIG	
		CDR	ESTABLISH RBAR 20C	
01:20	00:30		Perform APPROACH (Cue Card)	
			Manual Trajectory Control	
01:25	00:35			
01:30	00:40			

TERMINATE RNDZ OPS [22A]

1. ORBITER CONFIG FOR MATED ATTITUDE CONTROL

PLT — If VERNS available:

O14:F, O15:F, O16:F — Pri RJD LOGIC, DRIVER (sixteen) – OFF
RJDA 1A L2/R2 MANF DRIVER – ON

O14:E, O15:E, O16:E — All DDU cbs (six) – op

CDR A6U — √FLT CNTLR PWR - OFF

PLT — [GNC 23 RCS]

CRT — RCS F – ITEM 1 EXEC (*)
JET DES F1L – ITEM 9 EXEC (*)
F3L – ITEM 11 EXEC (*)
F2R – ITEM 13 EXEC (*)
F4R – ITEM 15 EXEC (*)
F1U – ITEM 17 EXEC (*)
F3U – ITEM 19 EXEC (*)
F2U – ITEM 21 EXEC (*)

[GNC 20 DAP CONFIG]

Config DAP A,B to A12,B12
X JET ROT ENA - ITEM 7 EXEC (*)
EDIT A9 - ITEM 3 + 9 EXEC
PRI RATE DB - ITEM 52 + 0.2 EXEC
LOAD - ITEM 5 EXEC
EDIT B9 - ITEM 4 + 9 EXEC
PRI RATE DB - ITEM 52 + 0.2 EXEC
LOAD - ITEM 5 EXEC

[SM 167 DOCKING STATUS]

CRT — √12 hooks closed

DAP: LO Z
If Loss of Verns:
DAP: A/ALT
DAP: LVLH
If VERN:
DAP: LVLH

* If ISS attitude control required, *
* Perform 3.111 HANDOVER ATTITUDE CONTROL ORBITER TO *
* CMG TA, (SODF: JOINT OPS, MATED OPERATIONS) *

2. ORBITER CONFIG FOR MATED OPS

MS — Perform DOCKING MECHANISM POWERDOWN (APDS), 8-6

A6L — LTS TRUSS FWD, AFT (two) - OFF
VEST PORT, STBD (two) - OFF

Exit RPOP - [Shift]/[F10]
Perform HHL STOW (RNDZ TOOLS), 7-6
-Z COAS - OFF

[GNC 22 S TRK/COAS CNTL]

CRT — -Z(-Y) STAR TRK - ITEM 4(3) EXEC (*)
-Y THOLD - ITEM 13 + 0 EXEC
-Z THOLD - ITEM 14 + 0 EXEC

[GNC 55 GPS STATUS]

DES RCVR - ITEM 27 (no *)

[GNC 33 REL NAV]

RNDZ NAV ENA - ITEM 1 EXEC (no *)

RETURN TO FLIGHT PLAN

CONTINGENCY OPS

RNDZ OMS BURN 5-3
SENSOR FAIL 5-7
S TRK NAV – HIGH INITIAL RESID 5-8
FLTR MINUS PROP 5-9
COAS NAVIGATION 5-10
BACKOUT/BREAKOUTS 5-11
VBAR CORRIDOR BACKOUT 5-12
BREAKOUT 5-14
SHUTTLE NOSE IN-PLANE BREAKOUT (R < 700 ft) 5-16
RNDZ BREAKOUT 5-18
EXPEDITED SEPS 5-19
SHUTTLE EMERGENCY SEPARATION 5-21
ANY ATTITUDE SEPARATION 5-23
Ti DELAY BURN 5-27
RNDZ NAV RECOVERY 5-29
TGT ITER 5-30
LOSS OF COMM 5-31
DEGRADED CONTROL 5-33
DEGRADED +X TRANSLATION 5-35
-X TRANSLATION 5-36
LOSS OF FORWARD SIDE-FIRING JETS 5-37
ONE FxD JET 5-38
BOTH FxD JETS (SAME SIDE) 5-39
VRCS 5-41

This Page Intentionally Blank

RNDZ OMS BURN

RNDZ OMS BURN

1. OMS BURN PREP

C2 Install OMS2/ORBIT OMS BURNS (Cue Cards) (two) and
Wedge ORBIT BURN MONITOR (Cue Cards) (two) (F6,F8)

1: GNC 20 DAP CONFIG

CRT1 √DAP config A7,B7
GNC, OPS 202 PRO

1: GNC ORBIT MNVR EXEC

2: GNC SYS SUMM 2

2. LOAD TGT DATA

If onboard-computed burn:
√Eng sel, TV ROLL, TRIM LOAD, and WT per Burn Pad
√TIG and TGT PEG 7 ΔVs per Final ORBIT TGT solution
√Guidance option is LAMBERT
If ground-computed burn:
√TGT data per Burn Pad (reload WT as reqd)
LOAD – ITEM 22 EXEC
TIMER – ITEM 23 EXEC
√Burn data

C3 DAP: A/AUTO/ALT(B/ALT as reqd)

CRT1 MNVR – ITEM 27 EXEC (*)

If RR ops:
A1U KU sel – AUTO TRK
1: GNC 33 REL NAV
CRT1 INH Angles – ITEM 24 EXEC (*)
1: GNC ORBIT MNVR EXEC

When mnvr to att complete:
C3 √DAP: A/AUTO/ALT

3. PERFORM RNDZ OMS BURN

TIG-3 F6,F8 FLT CNTLR PWR (two) – ON
Perform OMS2/ORBIT OMS BURNS (Cue Card)

Cont next page

4. <u>OMS POST BURN RECONFIGURATION</u>

F6,F8 FLT CNTLR PWR (two) – OFF
O8 L,R OMS He PRESS/VAP ISOL (four) – CL

C3 DAP: B/INRTL/ALT
DAP TRANS: PULSE/PULSE/PULSE
CRT1 RCS SEL – ITEM 4 EXEC (*)
Perform OMS TVC GMBL CK per Burn Pad

* If down arrow(s) or M(s), *
* select good GMBL *

GNC, OPS 201 PRO

5. <u>MNVR TO POST BURN ATTITUDE</u>

[1: GNC UNIV PTG]
√Desired UNIV PTG load active

C3 DAP: B/AUTO/ALT

If RR ops, when ATT ERR < 30 deg:
A1U KU sel – GPC
√KU TRACK tb – gray
[1: GNC 33 REL NAV]
CRT1 AUTO Angles – ITEM 23 EXEC (*)
[1: GNC UNIV PTG]

When in attitude and rates nulled:
C3 DAP: A/AUTO/VERN(ALT)

This Page Intentionally Blank

SENSOR FAIL

SENSOR FAIL

S TRK NAV – HIGH INITIAL RESID

1. NAV SAFING

   1: GNC 33 REL NAV

CRT1 √INH Angles – ITEM 24 EXEC (*)

On MCC GO (if no comm, continue):

2. CHECK FOR S TRK FALSE LOCK

   2: GNC 22 S TRK/COAS CNTL

   If -Z S TRK, perform COAS visual check:

   NOTE

   GNC 33 REL NAV: COAS X (+up) and COAS Y (+left) provide approx TGT position in COAS based on -Z S TRK measurement

   √For debris near TGT position

   If no debris near TGT position or TGT not visible:

   Go to step 3

   If debris near TGT position:

CRT2 -Z BREAK TRK – ITEM 8 EXEC

   When S PRES – (*):

CRT1 Monitor RESID V and H. Repeat BREAK TRK as reqd until stable lock-on

   Go to STAR TRACKER NAV, step 2 10A

   If -Y S TRK, perform visual check through W1:

   √For debris near TGT line-of-sight

   If no debris near TGT line-of-sight or TGT not visible:

   Go to step 3

   If debris near TGT line-of-sight:

CRT2 -Y BREAK TRK – ITEM 7 EXEC

   When S PRES – (*):

CRT1 Monitor RESID V and H. Repeat BREAK TRK as reqd until stable lock-on

   Go to STAR TRACKER NAV, step 2 10A

3. CHECK IMU MISALIGNMENT

   2: GNC 21 IMU ALIGN

CRT2 Nav sel IMU – des,sel (If Nav sel IMU unknown, pick one of two remaining IMUs)

CRT1 Record RESID V _____ and H _____

   If RESID V and H < 0.6:

   Go to STAR TRACKER NAV, step 3 10A

CRT2 Other IMU – des,sel

CRT1 Record RESID V _____ and H _____

4. RESUME PASS

   Continue with pass per STAR TRACKER NAV, step 3 10A, then:

   After S TRK pass, on MCC GO:

   NOTE

   SELF-TEST may false fail. √MCC for S TRK status

   2: GNC 22 S TRK/COAS CNTL

CRT2 -Z(-Y) SELF-TEST – ITEM 2(1) EXEC (*)

S TRK NAV – HIGH FLTR MINUS PROP

1. NAV SAFING

   1: GNC 33 REL NAV

CRT1 INH Angles – ITEM 24 EXEC (*)

On MCC GO (continue if no comm):

2. CHECK FOR S TRK FALSE LOCK

   2: GNC 22 S TRK/COAS CNTL

   If -Z S TRK, perform COAS visual check:

   NOTE

   GNC 33 REL NAV: COAS X (+up) and COAS Y (+left) provide approx TGT position in COAS based on -Z S TRK measurement

   √For debris near TGT position

   If no debris near TGT position or TGT not visible:

   Go to step 3

   If debris near TGT position:

   SV SEL – ITEM 4 EXEC (PROP)

   PROP TO FLTR – ITEM 9 EXEC

CRT2 -Z BREAK TRK – ITEM 8 EXEC

   When S PRES – (*):

CRT1 Monitor RESID V and H. Repeat BREAK TRK as reqd until stable lock-on

   Go to STAR TRACKER NAV, step 2 10A

   If -Y S TRK, perform visual check through W1:

   √For debris near TGT line-of-sight

   If no debris near TGT line-of-sight or TGT not visible:

   Go to step 3

   If debris near TGT line-of-sight:

   SV SEL – ITEM 4 EXEC (PROP)

   PROP TO FLTR – ITEM 9 EXEC

CRT2 -Y BREAK TRK – ITEM 7 EXEC

   When S PRES – (*):

CRT1 Monitor RESID V and H. Repeat BREAK TRK as reqd until stable lock-on

   Perform STAR TRACKER NAV, step 2 10A

3. RESUME PASS

   AUTO Angles – ITEM 23 EXEC (*)

   Continue -Z S TRK pass

   After S TRK pass, on MCC GO:

   NOTE

   SELF-TEST may false fail. √MCC for S TRK status

   2: GNC 22 S TRK/COAS CNTL

CRT2 -Z(-Y) SELF-TEST – ITEM 2(1) EXEC (*)

COAS NAVIGATION

NOTE

Do not execute MC1 or Out-Of-Plane null.
Prior COAS cal reqd to perform COAS NAV.
VERNs reqd to perform COAS NAV.
COAS Nav must be started within ~10 min of Ti to guarantee adequate geometry for nav convergence.
Breakout – If tgt not visible at MC2+18, refer to 1-4 for breakout criteria

1. COAS NAV CONFIG

A6U
√SENSE: -Z
√DAP: B7/AUTO/VERN(ALT)

GNC 22 STRK/COAS CNTL

CRT
COAS: SIGHT MODE – ITEM 22 EXEC (*)
REQD ID – ITEM 21 +1 EXEC
√POS -Z: ITEM 27 (*)

GNC 33 REL NAV

INH Angles – ITEM 24 EXEC (*)
√SV SEL, ITEM 4 – FLTR
If TGT NOT in COAS FOV:
| √MCC
If TGT in COAS FOV:
FLTR TO PROP – ITEM 8 EXEC
COAS – ITEM 14 EXEC (*)

Upon MCC uplink of COVARIANCE MATRIX,
COVAR REINIT – ITEM 16 EXEC

2. COAS MARKS

A6U
FLT CNTLR PWR – ON
DAP: B/FREE/PRI
RHC: As reqd to move TGT near COAS center and maintain BODY YAW ERR < 10 deg
DAP: B/FREE/VERN
RHC: As reqd to maintain TGT at COAS center and maintain BODY YAW ERR < 10 deg

When TGT centered in COAS, ATT REF pb – push

GNC 33 REL NAV

CRT
If X and Y RESID magnitudes ≥ 1.0:
| √MCC
If X and Y RESID magnitudes < 1.0:
FOR – ITEM 25 EXEC
√SV UPDATE – non-zero (within 8 sec), then
– 0.0 (after 8 sec more)

Repeat step 2 per schedule:
One mark every 10 to 20 sec until sunset Post-Ti

At sunset,

3. END COAS NAV

A6U
DAP: A7/AUTO/VERN(ALT)
FLT CNTLR PWR – OFF

GNC 22 STRK/COAS CNTL

CRT
COAS: DES – ITEM 25 EXEC (*)

Resume rendezvous timeline

BACKOUT/BREAKOUTS

VBAR CORRIDOR BACKOUT

CAUTION
Constraints for use: Orbiter on + Vbar in approach corridor

If RNG < 75 ft:

1. INITIATE CORRIDOR BACKOUT
   DAP: B/LVLH/VERN(PRI), no LO Z

   NOTE: DAP A allowed for ±X and -Z (in) THC

   THC: +Z (out) to establish a +0.1 ft/sec opening rate
   Maintain 8 deg corridor

   If PCT ARMED:
F4 DISARM PCT: SPDBRK/THROT pb – AUTO
√lt – OFF
   If 30 ft STATIONKEEPING desired:
   Maintain tgt in 5 deg corridor
   When RNG = 30 ft:
   THC: -Z (in) as reqd establish 30 ± 5 ft stationkeeping >>

   When RNG > 50 ft:
   DAP config: A9/B9
   GNC 23 RCS
   RCS F – ITEM 1 EXEC (*)
   JET DES F1F – ITEM 31 EXEC (no *)
   F2F – ITEM 35 EXEC (no *)

If(When) RNG > 75 ft:

2. INITIATE(CONTINUE) CORRIDOR BACKOUT
   DAP: A(B)/LVLH/VERN(PRI), LO Z

   NOTE: DAP A allowed for ±X and ±Z THC

   THC: +Z (out) to establish a +0.1 ft/sec opening rate
   Maintain 8 deg corridor

   DAP: B(A)

When opening rate established and RNG > 150:

3. PERFORM CORRIDOR BACKOUT OR BREAKOUT
   If BREAKOUT desired:
   Go To VBAR BREAKOUT, 5-14 >>
   Else:
   Maintain 8 deg corridor

   When desired stationkeeping range reached:
   THC: -Z (in) as reqd to establish stationkeeping range

Cont next page

4. REAPPROACH
   DAP: AUTO

   Go to VBAR APPROACH (Cue Card) from current stationkeeping range

VBAR BREAKOUT

CAUTION
Constraints for use:
Orbiter on ± Vbar in approach attitude
Range < 1000 ft cg to cg
Tgt stable on orbiter -Z axis
Orbiter X and Z axes are in-plane

If RNG < 75 ft:

1. INITIATE CORRIDOR BACKOUT
   DAP: B/LVLH/VERN(PRI), no LO Z

   NOTE: DAP A allowed for ±X and -Z (in) THC

   THC: +Z (out) to establish a +0.1 ft/sec opening rate
   Maintain 8 deg corridor

   When RNG > 50 ft:
   DAP config: A9/B9
   GNC 23 RCS
   RCS F – ITEM 1 EXEC (*)
   JET DES F1F – ITEM 31 EXEC (no *)
   F2F – ITEM 35 EXEC (no *)

If(When) 75 < RNG < 150 ft:

2. INITIATE(CONTINUE) CORRIDOR BACKOUT
   DAP: A(B)/LVLH/VERN(PRI), LO Z

   NOTE: DAP A allowed for ±X and ±Z THC

   THC: +Z (out) to establish a +0.1 ft/sec opening rate
   Maintain 8 deg corridor

   DAP: B(A)

If(When) RNG > 150 ft:

3. PERFORM RADIAL BURN ON ±VBAR
   If Rdot negative (closing on the target):
   THC: +Z (out) to null closing rate (Rdot ≥ 0 fps)
   Config DAP A,B to A7,B7
   DAP: A/LVLH/VERN(PRI), LO Z

   DAP TRANS: NORM/PULSE/PULSE

   THC: +X (up) for 6 sec (1.5 fps)

   DAP TRANS: PULSE/PULSE/PULSE
   FLT CNTLR PWR – OFF
   DAP: A/INRTL/VERN(ALT)

   Record Radial Burn TIG ___/___:___:___

   Inform MCC when SEP complete

Cont next page

4. PERFORM POSIGRADE/RETROGRADE BURN

√MCC for breakout direction

NOTE

Posigrade burn performed if second docking attempt desired

GNC, OPS 202 PRO

GNC ORBIT MNVR EXEC

√RCS SEL – ITEM 4 EXEC (*)

If radial burn from +Vbar:
TV ROLL – ITEM 5 +1 8 0 EXEC
If radial burn from -Vbar:
TV ROLL – ITEM 5 +0 EXEC

Set TIG to Radial Burn +28 min:
If Posigrade Sep:
TGT PEG 7 ΔVX – ITEM 19 +3 EXEC
ΔVY – ITEM 20 +0 EXEC
ΔVZ – ITEM 21 +0 EXEC
If Retrograde Sep:
TGT PEG 7 ΔVX – ITEM 19 –3 EXEC
ΔVY – ITEM 20 +0 EXEC
ΔVZ – ITEM 21 +0 EXEC

LOAD – ITEM 22 EXEC
TIMER – ITEM 23 EXEC

When RNG > 1000 ft:
DAP: NO LO Z

At TIG -8:00:
DAP: B/AUTO/ALT
MNVR – ITEM 27 EXEC

At TIG -0:30:
DAP: A/INRTL/PRI
FLT CNTLR PWR – ON

At TIG, THC: Trim VGOs ≤ 0.2 fps

FLT CNTLR PWR – OFF
DAP: A/INRTL/VERN(ALT)

Inform MCC when SEP complete

GNC, OPS 201 PRO

SHUTTLE NOSE IN-PLANE BREAKOUT (R < 700 ft)

CAUTION

Constraints for use:
- Orbiter X and Z axes in-plane
- Range ≤ 700 ft cg to cg*
- Tgt stable on orbiter -Z axis

*On approach use RNDZ Breakout until TORVA init (+X burns to start TORVA are complete)

If RNG < 75 ft:

1. INITIATE CORRIDOR BACKOUT
   DAP: B/LVLH/VERN(PRI), no LO Z

   NOTE
   DAP A allowed for ±X and -Z (in) THC

   THC: +Z (out) to establish a +0.1 ft/sec opening rate
   Maintain 8 deg corridor

   When RNG > 50 ft:
   DAP config: A9/B9
   GNC 23 RCS
   RCS F – ITEM 1 EXEC (*)
   JET DES F1F – ITEM 31 EXEC (no *)
   F2F – ITEM 35 EXEC (no *)

If (When) 75 < RNG < 150 ft:

2. INITIATE (CONTINUE) CORRIDOR BACKOUT
   DAP: A(B)/LVLH/VERN(PRI), LO Z

   NOTE
   DAP A allowed for ±X and ±Z THC

   THC: +Z (out) to establish a +0.1 ft/sec opening rate
   Maintain 8 deg corridor

   DAP: B(A)

If (When) RNG > 150 ft

3. PERFORM +X OR –X BURN
   DAP TRANS: NORM/PULSE/PULSE

   If Nose-Forward (TGT ID = 2 and OM = 0):
   THC: +X (up) for 6 sec (1.5 fps)
   If Tail-Forward (TGT ID = 2 and OM = 180):
   THC: -X (down) for 6 sec (1.5 fps)

   DAP TRANS: PULSE/PULSE/PULSE

   DAP: A/INRTL/VERN(ALT)

   Record (±X) Burn TIG ___/___:___:___
   Report Tig to MCC

A6U FLT CNTLR PWR – OFF

Cont next page

4. PERFORM FINAL BURN (+X Burn, Posigrade/Retrograde and Out-of-Plane)
GNC, OPS 202 PRO
GNC ORBIT MNVR EXEC
√RCS SEL – ITEM 4 EXEC (*)

√MCC for breakout direction and TV ROLL

NOTE
Posigrade burn will be performed if second docking attempt desired

Set TIG to (±X) burn + 30 min
If Posigrade Sep:
TGT PEG 7 ΔVX – ITEM 19 +4.3 EXEC
ΔVY – ITEM 20 +3.6 EXEC
ΔVZ – ITEM 21 +0 EXEC
If Retrograde Sep:
TGT PEG 7 ΔVX – ITEM 19 -4.3 EXEC
ΔVY – ITEM 20 +3.6 EXEC
ΔVZ – ITEM 21 +0 EXEC

TV ROLL – ITEM 5 +_ _ _ EXEC
LOAD – ITEM 22 EXEC
TIMER – ITEM 23 EXEC
Config DAP A,B to A7,B7

At TIG -8 min:
DAP: B/ALT, NO LO Z
MNVR – ITEM 27 EXEC (*)
DAP: AUTO

At TIG -0:30:
DAP TRANS: as reqd
DAP: A/INRTL/PRI
F7 FLT CNTLR PWR – ON

At TIG, THC: Trim VGOs ≤ 0.2 fps

F7 FLT CNTLR PWR – OFF

DAP TRANS: PULSE/PULSE/PULSE
DAP: A/INRTL/VERN(ALT)

GNC, OPS 201 PRO

On MCC call:
Go to TERMINATE SEP OPS 8C, 2-8

RNDZ BREAKOUT

NOTE

This procedure may be performed anytime between Ti and TORVA init (+X burns to start TORVA are complete)

1. BREAKOUT BURN PREP
   DAP: A/AUTO/PRI
   FLT CNTLR PWR – ON

2. 3 FPS RETROGRADE

CRT OPS 202 PRO
GNC ORBIT MNVR EXEC

√RCS SEL – ITEM 4 (*)
Set TIG to current time
TGT PEG 7 ΔVX – ITEM 19 –3 EXEC
ΔVY – ITEM 20 +0 EXEC
ΔVZ – ITEM 21 +0 EXEC
LOAD – ITEM 22 EXEC
TIMER – ITEM 23 EXEC
Do not maneuver to burn attitude
DAP TRANS: as reqd
Deflect THC to null VGOs
FLT CNTLR PWR – OFF

CRT OPS 201 PRO
DAP: A/AUTO/VERN(ALT)

EXPEDITED SEPS

This Page Intentionally Blank

NOTE

9.101 JOINT EMERGENCY UNDOCK AND SEPARATION (SODF: JOINT OPS, EMERGENCY RESPONSE) meets all constraints for use.
Constraints for use:
- Maneuver mated stack to the ±Vbar attitude
- Attitude rates ≤0.12 deg/axis
- Initial separation includes APDS spring pushoff
- Nominal Undock Orbiter DAP and RCS config

1. INITIAL SEPARATION SEQUENCE

When petals clear:
DAP: B9/LVLH/ALT
√DAP TRANS: PULSE/PULSE/PULSE, no LO Z
THC: as reqd to maintain target within 8 degree corridor on C/L camera or COAS
NOTE: DAP A allowed for ±X and -Z (in) THC

At physical sep + 1:00:
DAP: VERN(ALT)
THC: +Z (out) pulses at 10 sec intervals to establish RDOT > 0.1 fps

At physical sep + 3:00 and when RNG > 30 ft (DP-DP):
THC: +Z (out) as reqd at 10 sec intervals to establish and maintain RDOT > 0.2 fps

When RNG > 50 ft (DP-DP):
GNC 23 RCS
√RCS FWD – ITEM 1 EXEC (*)
JET DES F1F – ITEM 31 EXEC (no *)
F2F – ITEM 35 EXEC (no *)

When RNG > 75 ft (DP–DP):
DAP: LO Z
NOTE: DAP A allowed for ±X and ±Z THC

When RNG > 100 ft (DP–DP):
If radar desired, perform INIT RADAR ACQ 10A, 2-10
Perform DOCKING MECHANISM POWERDOWN (APDS), 8-6

2. PERFORM RADIAL BURN ON ±VBAR

When RNG > 150 ft (DP–DP):
DAP: A/LVLH/VERN(PRI), LO Z
DAP TRANS: NORM/PULSE/PULSE
THC: +X (up) for 12 sec (3.0 fps)
DAP TRANS: PULSE/PULSE/PULSE

FLT CNTLR PWR – OFF
DAP: A/INRTL/VERN(ALT)
Record Radial Burn TIG ___ / ___ : ___ : ___

Inform MCC when burn complete

At radial burn TIG + 6 min or when RNG > 1000 ft confirmed:
GNC 20 DAP CONFIG
Config DAP A,B to A7,B7
DAP: no LO Z

Cont next page

3. PERFORM FINAL BURN

NOTE: OMS burns:
If initial sep from +Vbar attitude, Final burn TIG should be NET Radial Burn TIG + 13 min and NLT Radial Burn TIG + 60 min
If initial sep from -Vbar attitude, Final burn TIG should be NET Radial Burn TIG + 13 min and NLT Radial Burn TIG + 40 min
+ X burns:
Final Burn TIG is Radial Burn TIG + 13 min

If performing emergency deorbit:
√MCC/PGSC for deorbit burn TIG/PAD
TV ROLL – ITEM 5 +1 8 0 EXEC
Go to EMERGENCY DEORBIT PREP/ENTRY (CONT DEORBIT, EMERGENCY)
Use single OMS burn procedures >>

If prop leak:
Go to LEAKING OMS PRPLT/He BURN (ORB PKT, OMS) >>

If other OMS burn:
Go to RNDZ OMS BURN, 5-4, use single OMS burn procedures >>

If +X burn:
√MCC for +X burn TIG and direction
NOTE: Posigrade burn should be performed if second docking attempt desired or if deorbit same day

GNC, OPS 202 PRO
GNC ORBIT MNVR EXEC
√RCS SEL – ITEM 4 EXEC (*)

If posigrade sep desired:
TGT PEG 7 ΔVX – ITEM 19 +3 EXEC
ΔVY – ITEM 20 +0 EXEC
ΔVZ – ITEM 21 +0 EXEC
If retrograde sep desired:
TGT PEG 7 ΔVX – ITEM 19 –3 EXEC
ΔVY – ITEM 20 +0 EXEC
ΔVZ – ITEM 21 +0 EXEC

LOAD – ITEM 22 EXEC
TIMER – ITEM 23 EXEC
MNVR – ITEM 27 EXEC (*)
DAP: B/AUTO/PRI

At TIG -0:30:
FLT CNTLR PWR – ON
DAP: A/INRTL/PRI

At TIG:
THC: Trim VGOs ≤ 0.2 fps
FLT CNTLR PWR – OFF

DAP: A/INRTL/VERN(ALT)

GNC, OPS 201 PRO

Go to TERMINATE SEP OPS 8C, 2-8

ANY ATTITUDE SEPARATION

> CAUTION
> For time-critical undocking procedures, go to 9.101 JOINT EXPEDITED UNDOCKING AND SEPARATION (SODF: JOINT OPS, EMERGENCY RESPONSE)
> If not hard-mated, start in step 3
> Constraints for use:
> Stack angular rates ≤ 0.12 deg/sec per axis
> APDS ring relative misalignment < 5º per axis (as read in C/L camr)

1. INSTALL RNDZ TOOLS
   If rendezvous tools already installed, go to step 2

   Perform C/L CAM INSTALL (PHOTO/TV, CENTERLINE (C/L) CAMR)
   Perform CCTV CONFIG FOR DOCKING/UNDOCKING (RNDZ TOOLS), 7-2
   If reqd, install -Z COAS

   If RPOP setup reqd:
   GNC 33 REL NAV
   ORB TO TGT – ITEM 10 EXEC
   RNDZ NAV ENA – ITEM 1 EXEC (*)

   Perform RPOP INITIALIZATION (RNDZ TOOLS), 7-8, then:
   Perform RPOP OPS (RNDZ TOOLS), 7-9, steps 1 to 5, then:
   Perform TCS ACTIVATION (RNDZ TOOLS), 7-18, steps 1 to 3, then:
   Perform TCS MANUAL ACQUISITION (RNDZ TOOLS), 7-19, step 1
   (Set RANGE = 4 ft, AZIMUTH = 0, ELEVATION = 0)
   Note: TCS will not track until after undock

   Perform HHL CHECKOUT (RNDZ TOOLS), 7-6

2. CONFIGURE FOR UNDOCKING
   √ISS: FREE
   A6U √DAP: FREE
   √SENSE: -Z
   AFT ADI ATT – LVLH
   ERR – MED
   RT – MED

   GNC 20 DAP CONFIG
   Config DAP A,B to A9/B9
   X Jets ROT ENA – ITEM 7 EXEC (no *)

   DAP: B/FREE/ALT, no LO Z
   √DAP TRANS: PULSE/PULSE/PULSE

   GNC 23 RCS
   Reselect manually deselected primary jets (no *) except F1F and F2F

   O14:E, O15:E, O16:E All DDU cbs (six) – cl

   O14:F, O15:F, O16:F Pri RJD LOGIC, DRIVER (sixteen) – ON

   Perform DOCKING MECHANISM POWERUP (APDS), 8-5

Cont next page

3. COMMAND SEPARATION
Perform UNDOCKING PREP (APDS), 8-7

If APDS spring-assisted separation not expected (not hard-mated):
On MCC GO, and when -0.12 ≤ ROLL, PITCH, YAW RATE ≤ 0.12
APDS CIRC PROT OFF pb – push
√CIRCUIT PROTECT OFF lt – lt on
OPEN LATCHES – pb push
√LATCHES CLOSED lt – lt off
√OPEN lt – lt on
If APDS spring-assist expected (hard-mated):
On MCC Go, and when -0.12 ≤ ROLL, PITCH, YAW RATE ≤ 0.12
Perform UNDOCKING OPERATIONS 6A, 2-6, step 3

4. INITIAL SEPARATION SEQUENCE
A6U FLT CNTLR PWR – ON
When capture latches/hooks open:
If no spring-assisted separation:
DAP: B/FREE/ALT, no LO Z
THC: +Z (out) 4 pulses at 10 sec intervals
Do not attempt to maintain 8 degree corridor
If spring-assisted separation:
When petals clear:
DAP: B/LVLH/ALT, no LO Z
THC: as reqd to maintain target within 8 deg corridor on C/L camera

At physical sep +1:00:
DAP: LVLH/VERN(PRI)
THC: as reqd to maintain target within 8 degree corridor on C/L camera
THC: +Z (out) pulses at 10 sec intervals to establish RDOT > 0.1 fps, then no +Z (out) pulses until 30 ft step
Note: DAP A allowed for ±X and -Z (in) THC

If Rdot falls below 0.02 fps, establish opening rate ≤ 0.05 fps using +Z (out) pulses at 10 second intervals, then wait >2 min to perform 30 ft step

If reqd, perform TCS MANUAL ACQUISITION (RNDZ TOOLS), 7-19, step 3

At physical sep +3:00 and when RNG > 30 ft (DP to DP):
THC: +Z (out) as reqd at 10 sec intervals to establish and maintain RDOT > 0.2 fps

When RNG > 50 ft (DP to DP):
GNC 23 RCS
√RCS FWD – ITEM 1 EXEC (*)
JET DES F1F – ITEM 31 EXEC (no *)
F2F – ITEM 35 EXEC (no *)

When RNG > 75 ft (DP to DP):
DAP: LO Z
Note: DAP A allowed for ±X and ±Z THC

When RNG > 100 ft (DP to DP):
If radar desired, perform INIT RADAR ACQ 10A, 2-10
A7L POWER OFF pb – push
If reqd, perform DOCKING RING RETRACTION (NOT MATED) (APDS), 8-9
Perform DOCKING MECHANISM POWERDOWN (APDS), 8-6

Cont next page

5. PERFORM +X BURN AT RNG > 150 FT

When RNG > 150 ft (DP-DP):

DAP: A/LVLH/VERN(PRI), LO Z

DAP TRANS: NORM/PULSE/PULSE

THC: +X (up) for 8 sec (2.0 fps)

DAP TRANS: PULSE/PULSE/PULSE

Record +X Burn TIG ___ / ___ : ___ : ___

Stop maintaining 8 deg corridor

Inform MCC when burn complete

6. ROTATE TO PLACE AND MAINTAIN ISS IN OVHD WINDOW

DAP: A/INRTL/PRI

Perform manual pitch rotation as reqd:

DAP ROT: DISC/PULSE/DISC

RHC: ± PITCH as reqd to place and maintain ISS in OVHD Window

When RNG > 1000 ft (CG–CG):

DAP: no LO Z

7. PERFORM OUT-OF-PLANE BURN

GNC 20 DAP CONFIG

Config DAP A,B to A7/B7

GNC, OPS 202 PRO

GNC ORBIT MNVR EXEC

√RCS SEL – ITEM 4 EXEC (*)

Set TIG to +X Burn TIG + 22 min

TGT PEG 7 ΔVX – ITEM 19 +0 EXEC

ΔVY – ITEM 20 +2.5 EXEC

ΔVZ – ITEM 21 +0 EXEC

LOAD – ITEM 22 EXEC

TIMER – ITEM 23 EXEC

If VGO Z is negative:

TGT PEG 7 ΔVY – ITEM 20 -2.5 EXEC

LOAD – ITEM 22 EXEC

TIMER – ITEM 23 EXEC

√VGO Z ≥ 0

Do not maneuver to burn attitude

At TIG:

√RNG > 1500 ft (CG–CG)

A6U FLT CNTLR PWR – OFF

DAP ROT: DISC/DISC/DISC

F6 FLT CNTLR PWR – ON

THC: trim VGOs ≤ 0.2 fps

FLT CNTLR PWR – OFF

Record Out-of-Plane Burn TIG ___/___:___:___

Cont next page

8. PERFORM FINAL BURN

√MCC for final burn engine selection and breakout direction

NOTE: Posigrade burn should be performed if second docking attempt desired or if deorbit same day

If single OMS burn:

√MCC for burn TIG

Perform RNDZ OMS BURN, 5-4

If + X burn:

If posigrade sep desired:

If ΔVY from Out-of-Plane burn (step 4) was positive:

TV ROLL – ITEM 5 +2 7 0 EXEC

If ΔVY from Out-of-Plane burn (step 4) was negative:

TV ROLL – ITEM 5 +9 0 EXEC

TGT PEG 7 ΔVX – ITEM 19 +7.0 EXEC

ΔVY – ITEM 20 +0 EXEC

ΔVZ – ITEM 21 +0 EXEC

If retrograde sep desired:

If ΔVY from Out-of-Plane burn (step 4) was positive:

TV ROLL – ITEM 5 +9 0 EXEC

If ΔVY from Out-of-Plane burn (step 4) was negative:

TV ROLL – ITEM 5 +2 7 0 EXEC

TGT PEG 7 ΔVX – ITEM 19 -7.0 EXEC

ΔVY – ITEM 20 +0 EXEC

ΔVZ – ITEM 21 +0 EXEC

Set TIG to Out-of-Plane Burn TIG + 22 min

LOAD – ITEM 22 EXEC

TIMER – ITEM 23 EXEC

MNVR – ITEM 27 EXEC (*)

DAP: B/AUTO/PRI

At TIG -0:30:

F6 FLT CNTLR PWR – ON

DAP: A/INRTL/PRI

At TIG:

THC: trim VGOs ≤ 0.2 fps

F6 FLT CNTLR PWR – OFF

DAP: A/INRTL/VERN(ALT)

GNC, OPS 201 PRO

Go to TERMINATE SEP OPS 8C, 2-8

Ti DELAY BURN

1. OPS 202 PRO

   GNC ORBIT MNVR EXEC

   Load Ti Delay Pad, 3-7

   If no Ti Delay targets available:
   - Add 3.0 fps to ΔVx of last Ti burn solution
   - Burn ΔVy and ΔVz as computed in last Ti burn solution
   - Max TIG Slip is 4 minutes

   NOTE

   Guidance will downmode to EXT ΔV

   If RCS:
   - Perform RCS BURN (Cue Card)

   If OMS:
   - Perform RNDZ OMS BURN (CONTINGENCY OPS), 5-4

2. Reload new BASETIME per final Ti PAD, 3-7

   GNC 34 ORBIT TGT

   TGT NO – ITEM 1 +1 EXEC
   Set BASETIME to new Ti TIG ___/___:___:___
   Load – ITEM 26 EXEC
   Reset ET, SM timers to new Ti TIG

   If Ti Delay executed because no comm:
   - Add 0/01:32:00 to BASE TIME for subsequent delay rev

   See LOSS OF COMM (CONTINGENCY OPS), 5-31

   If no comm for 2 delay revs:

   NOTE

   Ti Delay breakout is a 1.5 fps posigrade burn at the next Ti point

   Perform RNDZ BREAKOUT (CONTINGENCY OPS), 5-18, with the following deltas:
   - Set TIG to BASE TIME
   - TGT PEG 7 ΔVX – ITEM 19 +1.5 EXEC
     ΔVY – ITEM 20 +0 EXEC
     ΔVZ – ITEM 21 +0 EXEC

   Perform TERMINATE SEP OPS 8C, 2-8

3. Perform Post Ti Nav 16A , 4-16, then

   Return to RENDEZVOUS TIMELINE at PET: -01:25, 4-11

   NOTE

   Extra NCC Burn and Ti Onboard Solution pads, 5-28

NCC BURN SOLUTION

TIG | | | | / | | | : | | | : | | |

	PRELIMINARY	INTERMEDIATE
ΔVX	( ) .	( ) .
ΔVY	( ) .	( ) .
ΔVZ	( ) .	( ) .
ΔVT	.	.

	FINAL	GROUND	FINAL-GROUND LIMITS
ΔVX	( ) .	( ) .	(.)
ΔVY	( ) .	( ) .	(.)
ΔVZ	( ) .	( ) .	(.)
ΔVT	.	.	(.)

Ti ONBOARD SOLUTIONS

PREL FLTR	1ST INTER FLTR	2ND INTER FLTR (IF REQD)
( ) .	( ) .	( ) .
( ) .	( ) .	( ) .
( ) .	( ) .	( ) .
.	.	.

FINAL FLTR	PROP (IF REQD)	FINAL-GROUND LIMITS
( ) .	( ) .	( ) .
( ) .	( ) .	( ) .
( ) .	( ) .	( ) .
.	.	.

FINAL Ti PAD (<u>MNVR PADS</u>)

RNDZ NAV RECOVERY

1. If Recovery from OPS MODE RECALL:
   (add/delete GPC to/from redundant set)
   GNC 33 REL NAV
   RNDZ NAV ENA – ITEM 1 EXEC (*)
   GNC UNIV PTG
   TRK – ITEM 19 (CUR-*)
   Go to step 3

2. If Recovery from OPS TRANSITION (G8/G3 to G2):
   GNC 34 ORBIT TGT
   TGT NO – ITEM 1 +1 EXEC
   Set BASE TIME to Ti TIG (Ti Burn Pad, 3-6)
   LOAD – ITEM 26 EXEC
   GNC 33 REL NAV
   Upon MCC uplink of TGT SV,
   RNDZ NAV ENA – ITEM 1 EXEC (*)

   NOTE
   If RNDZ NAV not enabled (no *),
   DO NOT PROCEED. √MCC

   Select appropriate target track attitude
   GNC UNIV PTG

	-Z	-Y (STRK)	+Y
TGT ID	+1	+1	+1
BODY VECT	+3	+4	+5
P	√+90	√+0	+0
Y	√+0	√+280.6	+90
OM	+0	+90	+180

   TRK – ITEM 19 (CUR-*)

C3 3. DAP: ALT
   DAP: A/AUTO
   DAP ROT: DISC/DISC/DISC
   When in attitude, DAP: VERN

   If NAV sensor data available:
   If STRK NAV:
   Go to STAR TRACKER NAV 10A , 4-10 >>
   If RR NAV:
   GNC 33 REL NAV
CRT KU ANT ENA – ITEM 2 (*)
   GNC I/O RESET
   Go to RR NAVIGATION 13B , 4-13

TGT ITER

```
When in Lambert Targeting and TGT ITER occurs:
    If PRED MATCH other than 999999 (all 9s):
    | √MCC and read down PRED MATCH from SPEC 34 (MCC has delta Vs)
    |   On MCC GO or if no comm:
    |       Recall TGT set and recompute
    |   If TGT ITER recurs and PRED MATCH less than 400:
    |   |   Contact MCC and read down PRED MATCH from SPEC 34
    |   |   On MCC GO or if no comm:
    |   |       Load current delta Vs and execute as Lambert burn  >>
    |   If TGT ITER recurs and PRED MATCH greater than 400:
    |       Contact MCC and read down PRED MATCH from SPEC 34
    |       On MCC GO or if no comm:
    |           Load ground solution and execute as EXT DV burn
    |             (If MC burn, uplink of ground solution reqd)  >>
    |           If ground solution not available:  No burn  >>
    If PRED MATCH 999999 (all 9s):
        On MCC GO or if no comm:
            Load ground solution and execute as EXT DV burn
              (If MC burn, uplink of ground solution reqd)  >>
            If ground solution not available:  No burn  >>
```

LOSS OF COMM

If comm with MCC is lost during rendezvous ops, attempt to establish comm by performing 6.105 SSOR ACTIVATION (SODF: JOINT OPS, COMM/DATA), and COMM LOST (ORB PKT, COMM). Do not maneuver out of target track attitude unless all other means of acquiring comm are expended

Ground-Targeted Burns

1. If NH or NC PADs not available, do not perform burn

2. If a day of rendezvous NC or NH maneuver was not performed nominally, then discontinue rendezvous operations

3. If the day of rendezvous NC maneuver is performed using preliminary pads, a large NCC burn can be expected

Lambert-Targeted Burns

1. If "GO for Ti" not received from MCC by Ti TIG - 5 min, perform Ti DELAY BURN (CONTINGENCY OPS), 5-27. If comm is not recovered after two delay revs, perform modified RNDZ BREAKOUT per Ti DELAY BURN (CONTINGENCY OPS), 5-27

2. If radar nav was stopped in an attempt to get Ku comm during the delay, do not perform second or third NCC burn unless radar nav is re-enabled and sufficient radar marks are taken to provide a converged solution

3. If no comm for any midcourse correction (MC) burn, perform burn and continue to prox ops

Prox Ops

1. If "GO for RPM" not received from MCC, do not perform Rbar Pitch Maneuver. Proceed directly to the TORVA and continue to the Vbar. On the Vbar, stationkeep for a maximum of 1 rev and attempt to re-establish comm. If no comm after 1 rev of stationkeeping, perform VBAR BREAKOUT (CONTINGENCY OPS), 5-14

2. If "GO to proceed inside 600, to 400 ft" not received from MCC, do not approach inside 600 ft (CG-CG). Stationkeep on the Vbar outside of 600 ft for a maximum of 1 rev and attempt to re-establish comm. If no comm after 1 rev of stationkeeping, perform VBAR BREAKOUT (CONTINGENCY OPS), 5-14

3. If "GO to proceed inside 400, to 170 ft" not received from MCC, do not approach inside 400 ft (CG-CG). Stationkeep on the Vbar outside of 400 ft for a maximum of 1 rev and attempt to re-establish comm. If no comm after 1 rev of stationkeeping, perform VBAR BREAKOUT (CONTINGENCY OPS), 5-14

4. If "GO to proceed inside 170 ft" or "go for docking" not received from MCC do not attempt docking. Back out (if required) and stationkeep outside of 170 ft for a maximum of 1 rev and attempt to re-establish comm. If no comm after 1 rev of stationkeeping, go to VBAR BREAKOUT (CONTINGENCY OPS), 5-14

This Page Intentionally Blank

DEGRADED CONTROL

This Page Intentionally Blank

DEGRADED
CONTROL

DEGRADED +X TRANSLATION

NOTE 1

Degraded +X occurs with loss of L1A and L3A or R1A and R3A.
Perform these procedures in addition to nominal approach or separation procedures.
√MCC for additional procedure updates

NOTE 2

NO-GO for RPM.
LO Z +Z translation is not effective, do not perform LO Z +Z translation (braking).
+X translation pulses must be doubled to attain desired ΔV.
+X translation couples into Y translation toward the failed jets (selection of DAP P,Y – ALL minimizes coupling)

1. Between Ti and TORVA initiation, continue to Rbar and initiate TORVA:
   Perform APPROACH (Cue Card), with the following deltas:
   - Bias Rdot 0.1 fps slower than Cue Card
   - Do not perform LO Z +Z translation (braking)
   - Perform DAPS A9, B9 PITCH AND YAW TO ALL [A]
   - Do not perform RPM
   - Initiate TORVA with approx 0.1 fps slower Rdot
   - Double +X pulses to initiate TORVA
   - Null Ydot (approx 0.1 fps) immediately after TORVA initiation

2. Between TORVA initiation and RNG = 250, continue to Vbar:
   Perform APPROACH (Cue Card) with the following deltas:
   - Do not perform LO Z +Z translation (braking)
   - Perform DAPS A9, B9 PITCH AND YAW TO ALL [A]
   - When ready to ESTABLISH VBAR,
     DAP: No LO Z, stay No LO Z thru dock
   - If Rdot exceeds cue card limit:
     - DAP: B
     - THC: Brake to cue card limit using 10 sec pulse spacing

3. Inside RNG = 250, continue approach to docking
   Perform VBAR APPROACH (Cue Card) with the following deltas:
   - If RNG > 75 ft:
     - DAP: No LO Z, stay No LO Z thru dock
     - Perform DAPS A9, B9 PITCH AND YAW TO ALL [A]
     - If Rdot exceeds cue card limit:
       - DAP: B
       - THC: Brake to cue card limit using 10 sec pulse spacing
   - If RNG < 75 ft,
     - No changes to approach procedures

DAPS A9, B9 PITCH AND YAW TO ALL [A]

[GNC 20 DAP CONFIG]

DAP EDIT	–	ITEM 3 +9 EXEC
PRI P OPTION	–	ITEM 55 EXEC – (ALL)
PRI Y OPTION	–	ITEM 56 EXEC – (ALL)
LOAD	–	ITEM 5 EXEC
DAP EDIT	–	ITEM 4 +9 EXEC
PRI P OPTION	–	ITEM 55 EXEC – (ALL)
PRI Y OPTION	–	ITEM 56 EXEC – (ALL)
LOAD	–	ITEM 5 EXEC

4. During docked operations, or undocking and separation:
   √MCC for updates to UNDOCKING/SEP TIMELINE

DEGRADED -X TRANSLATION

NOTE 1

Degraded -X occurs with loss of any two forward-firing jets (F1F, F2F, F3F). Perform these procedures in addition to nominal approach or separation procedures.

√MCC for additional procedure updates

NOTE 2

LO Z +Z translation (braking) couples strongly into +X translation. Forward-firing jet deselect/reselect at 75 ft not required

During approach, backout, breakout, or separation:

- If LO Z +Z translation (braking) is required, perform 4-6 -X pulses for every 1 LO Z +Z pulse
- Double the number of degraded -X pulses to achieve desired -X translation

LOSS OF FORWARD SIDE-FIRING JETS

NOTE 1

This failure occurs with the loss of F1L and F3L or F2R and F4R. Perform these procedures in addition to the nominal approach, or separation procedures.

√MCC for additional procedure updates

NOTE 2

DAP disables ±Y translation.

NO-GO for RPM, approach within 250 ft, or docking

During approach:

If failure occurs post-Ti :

Do not trim VGO Y on MC1-4

If in -Z TGT TRK, do not perform MANUAL OUT-OF-PLANE NULL 19A , 4-19

Do not approach inside 250 ft (interface to interface)

If inside 250 ft, perform VBAR CORRIDOR BACKOUT (CONTINGENCY OPS), 5-12 to RNG > 250 ft, with the following deltas:

Maintain 8 deg corridor in X-axis direction

If 8 deg corridor is violated in X or Y direction and 250 ft > RNG > 150 ft, go to VBAR BREAKOUT (CONTINGENCY OPS), 5-14

When RNG = 250 ft, √MCC for further actions

LOSS OF ONE FxD JET

NOTE

Failure occurs with the loss of any one of the following jets: F1D, F2D, F3D, or F4D. Perform these procedures in addition to nominal approach or separation procedures.
NO-GO for RPM

If VERNS failed, perform APPROACH and VBAR APPROACH Cue Cards with following deltas:

- Do not perform braking (LO Z or NORM Z) between 600 ft and the Vbar (PITCH ERR < 2 deg)
- When in Vbar attitude (PITCH ERR < 2 deg):
  - DAP: NO LO Z, maintain NORM Z until docking
  - For braking, use DAB B +Z (out) pulses at 10-sec intervals
- When RNG = 75 ft:
  - 10-sec intervals for +Z (out) pulses no longer required

When RNG = 30 ft:

- Stationkeep:
  - THC: +Z (out) as reqd to null Rdot
- When ready to initiate final approach:
  - THC: -Z (in) as reqd to establish Rdot = -0.07 fps
  - Note: This verifies the health of the remaining FxD jet

LOSS OF BOTH FxD JETS (SAME SIDE)

* Perform the IMMEDIATE ACTIONS for the 2FxD CASE on the *
* RCS FAILURE DURING PROX OPS Cue Card *

NOTE 1

Failure occurs with loss of F1D and F3D, or F2D and F4D.
Perform these procedures in addition to nominal approach or separation procedures.
√MCC for additional procedure updates

NOTE 2

NO-GO for RPM, approach within 250 ft, or docking.
DAP disables ±Y translation.
Reselecting failed forward down-firing jet overrides DAP lockout of ±Y translation.
Do not perform LO Z +Z translation(braking) or PCT.
LO Z +Z translation(braking) will couple into -Z translation(closing) and Y translation toward failed jets.
Norm Z DAP B braking on Vbar (when RNG > 75 ft) is to be performed at 10-sec intervals (pulses at 10 sec intervals minimizes structural resonance).
-Z translation couples into Y translation toward failed jets.
-X translation couples into -Z translation (closing) in LO Z PRI control.
DAP PRI P OPTION – TAIL, Y OPTION – ALL minimizes Y translation effects resulting from attitude control firings

1. If failure occurs prior to Ti, delay RNDZ until failed jet(s) recovered:
   Perform CONFIG PITCH OPTION TO TAIL [A]
   If failed jet(s) not recovered, √MCC for breakout procedure >>

2. If failure occurs between Ti and TORVA initiation, continue to Rbar:
   Perform CONFIG PITCH OPTION TO TAIL [A]
   Do not trim VGO Y on MC1-4
   If in -Z TGT TRK, do not perform MANUAL OUT-OF-PLANE NULL [19A], 4-19
   After CONFIG FOR RBAR [20B], 4-20 perform CONFIG PITCH OPTION TO TAIL [A]
   Perform APPROACH (cue card) with following deltas:
      Bias Rdot 0.1 ft/s slower than cue card
      Do not perform LO Z +Z(braking) translation
      Perform CONFIG YAW OPTION TO ALL [B]
      Do not perform RPM
      Do not initiate TORVA
   If failed jet(s) not recovered by RNG = 500 ft,
      Go to RNDZ BREAKOUT (CONTINGENCY OPS), 5-18 with following deltas:
         Do not trim VGO Y >>

3. If failure occurs between TORVA initiation and Vbar arrival, continue approach:
   Perform CONFIG YAW OPTION TO ALL [B]
   Do not perform LO Z +Z (braking) translations
   If RNG < 345 cg-cg (280 dp-dp) prior to Vbar arrival, or if 8 deg corridor violated in Y-axis direction:
      Go to SHUTTLE NOSE IN-PLANE BREAKOUT (R < 700 ft), 5-16 >>
   When ready to ESTABLISH VBAR (PITCH ERR ≤ 2 deg):
      DAP: No LO Z
      Use DAP B +Z (out) pulses at 10 second intervals to maintain Interface RNG > 250 ft
      Perform REGAIN Y CONTROL [C]
      Establish and maintain 8 deg corridor
      If failed jet(s) not recovered, go to step 6

Cont next page

4. If failure occurs after Vbar arrival, backout to RNG > 250 ft:
   Perform VBAR CORRIDOR BACKOUT (CONTINGENCY OPS), 5-12 with following deltas:
   After establishing opening rate:
   Config DAP to A9, B9
   Perform REGAIN Y CONTROL [C]
   Perform CONFIG DAP YAW OPTION TO ALL [B]
   When RNG > 75 ft,
   √DAP: No LO Z
   Use DAP B +Z (out) pulses at 10-second intervals to maintain opening RDOT
   If 8 deg corridor violated and 250 ft > RNG > 150 ft, go to step 6
   When RNG > 250 ft, do not perform -Z translation (maintain opening RDOT)
   If failed jet(s) not recovered, go to step 6

5. If failure occurs while docked, or during undocking/separation:
   √MCC for updates to UNDOCKING/SEP TIMELINE >>

6. Perform VBAR BREAKOUT (CONTINGENCY OPS), 5-14 with following deltas:
   √DAP: No LO Z
   In steps 2 and 3, do not select DAP LO Z
   After step 3:
   Perform DESELECT FAILED FORWARD DOWN-FIRING JET [D]
   DAP: LO Z
   In step 4, do not trim VGO Y

CONFIG PITCH OPTION TO TAIL [A]
[GNC 20 DAP CONFIG]
A PRI P OPTION – ITEM 15 EXEC (twice)(TAIL)
B PRI P OPTION – ITEM 35 EXEC (twice)(TAIL)

CONFIG YAW OPTION TO ALL [B]
[GNC 20 DAP CONFIG]
A PRI Y OPTION – ITEM 16 EXEC (ALL)
B PRI Y OPTION – ITEM 36 EXEC (ALL)

REGAIN Y CONTROL [C]
√MCC for which jet to reselect
[GNC 23 RCS]
RCS FWD – ITEM 1 EXEC (*)
JET DES FxD – ITEM XX EXEC (no *)

NOTE: Do not perform any THC: -Z (in) commands

DESELECT FAILED FORWARD DOWN-FIRING JET [D]
Deselect manually reselected jet
[GNC 23 RCS]
RCS FWD – ITEM 1 EXEC (*)
JET DES FxD – ITEM XX EXEC (*)

LOSS OF VRCS

NOTE

This procedure overrides LOSS OF VERNIERS (ORB OPS, RCS) during rendezvous ops

1. Utilize VERN fail downmodes (PRI/ALT) specified in parentheses and follow VERN fail starred blocks per timeline. If VERN fail downmode not specified, use PRI Nose and Tail control

2. COAS NAV should not be performed if VERN fail

3. Additional braking pulses (+Z) may be reqd due to LO Z PRI attitude control cross coupling

4. PCT modes to FREE/VERN. In the event of failed capture, mode DAP to PRI per FAILED CAPTURE block, step 2

5. Twelve hooks reqd for mated attitude control in ALT

This Page Intentionally Blank

REFERENCE DATA

ISS RNDZ OPS DAP CONFIGURATIONS 6-2
POST-CONTACT THRUST (PCT) REFERENCE DATA 6-3
TARGETING DATA 6-4
POST NC 6-6
Ti 6-7
MC3 6-8
TCS REFLECTOR VISIBILITY DURING APPROACH 6-9
HHL AIMING LOCATIONS 6-10
SHUTTLE CENTERLINE TARGET 6-11
ISS ATTITUDE CONTROL SYSTEM MODING INDICATORS 6-12
RANGING CHARTS 6-13
COAS SUBTENDED ANGLES (DEG) VS RANGE (FT) 6-14

ISS RNDZ OPS DAP CONFIGURATIONS

	RNDZ		TERMINAL PHASE		PROX OPS		DOCKING		SPEC 20 ITEM #	
	A7	B7	A8	B8	A9	B9	A10	B10	A	B
PRI										
ROT RATE	0.200	0.500	0.050	0.050	0.130	0.130	0.050	0.050	10	30
ATT DB	2.00	2.00	2.00	2.00	2.00	2.00	0.60	0.60	11	31
RATE DB	0.20	0.20	0.20	0.20	0.10	0.10	0.10	0.10	12	32
ROT PLS	0.10	0.04	0.10	0.04	0.10	0.04	0.10	0.04	13	33
COMP	.000	.000	.000	.000	.000	.000	.000	.000	14	34
P OPTION	ALL	ALL	ALL	ALL	TAIL	TAIL	TAIL	TAIL	15	35
Y OPTION	ALL	ALL	ALL	ALL	TAIL	TAIL	TAIL	TAIL	16	36
TRANS PLS	0.10	0.05	0.10	0.05	0.05	0.01	0.05	0.01	17	37
ALT										
RATE DB	0.10	0.10	0.10	0.10	0.10	0.10	0.10	0.10	18	38
JET OPT	ALL	ALL	ALL	ALL	TAIL	TAIL	TAIL	TAIL	19	39
# JETS	2	2	2	2	2	2	2	2	20	40
ON TIME	0.08	0.08	0.08	0.08	0.08	0.08	0.08	0.08	21	41
DELAY	0.00	0.00	0.00	0.00	0.00	10.00	0.00	0.00	22	42
VERN										
ROT RATE	0.016	0.200	0.050	0.050	0.130	0.130	0.050	0.050	23	43
ATT DB	1.00	1.00	1.00	1.00	1.00	1.00	0.50	0.50	24	44
RATE DB	0.020	0.020	0.020	0.020	0.020	0.020	0.020	0.020	25	45
ROT PLS	0.010	0.002	0.05	0.020	0.050	0.020	0.050	0.020	26	46
COMP	.000	.000	.000	.000	.000	.000	.000	.000	27	47
CNTL ACC	0	0	0	0	0	0	0	0	28	48

POST-CONTACT THRUST (PCT) REFERENCE DATA

PBI FUNCTION WHENEVER IN OPS 2:

PBI	When PCT is disarmed. . .	When PCT is armed. . .	When PCT is active. . .
L or R AUTO SB PBI (PBI lit when PCT armed/active)	Arms PCT	Disarms PCT	Disarms and Terminates PCT [1]
L AUTO/MAN BF PBI or DAP: Spare PBI (PBI lit when PCT active)	No Effect	Modes to DAP: FREE/PRI and activates PCT [2]	Terminates PCT [1]
DAP: FREE PBI	Normal Function	Normal Function	Terminates PCT [1]

[1] The following actions occur when PCT terminated by either automatic timeout or manual abort via above PBIs:
PCT firing sequence terminated
DAP moded to A/VERN
DAP A,B configured to A9,B9 (Prox Ops DAP)

[2] Once PBI is depressed, PCT sequence will be initiated within maximum of 0.28 sec. The PCT sequence for ISS docking missions consists of 0.56 sec jet firing sequence, followed by 0.96 delay, completed with 0.88 sec jet firing sequence, giving total PCT sequence duration of 2.4 sec. Two nose jets and two tail jets fire during sequence

- PCT firing sequence can also be aborted by taking RHC/THC out of detent

TARGETING DATA

SPEC 34 ITEM NO	1			6	17	18	19	20	
TGT ALTITUDE	TGT NO	DESCRIPTION	T1 REL TO BASETIME	EL (DEG)	DT (MIN)	DX (KFT)	DY (KFT)	DZ (KFT)	NOTES
	9	NCC	-0/00:55:48	0	55.8	-48.6	0	+1.2	BASETIME = Ti TIG
	10	Ti	0/00:00:00	0	74.4	-0.9	0	+1.8	
	11	MC1	0/00:20:00	0	54.4	-0.9	0	+1.8	
130	12	MC2	0/00:47:24	28.45	27.0	-0.9	0	+1.8	
	13	MC3	0/00:17:00	0	10.0	-0.9	0	+1.8	BASETIME = MC2 TIG
	14	MC4	0/00:27:00	0	13.0	0	0	+0.6	
	19	MC2 ON TIME	0/00:00:00	0	27.0	-0.9	0	+1.8	
	9	NCC	-0/00:56:18	0	56.3	-48.6	0	+1.2	BASETIME = Ti TIG
	10	Ti	0/00:00:00	0	75.1	-0.9	0	+1.8	
	11	MC1	0/00:20:00	0	55.1	-0.9	0	+1.8	
150	12	MC2	0/00:48:06	28.46	27.0	-0.9	0	+1.8	
	13	MC3	0/00:17:00	0	10.0	-0.9	0	+1.8	BASETIME = MC2 TIG
	14	MC4	0/00:27:00	0	13.0	0	0	+0.6	
	19	MC2 ON TIME	0/00:00:00	0	27.0	-0.9	0	+1.8	
	9	NCC	-0/00:56:48	0	56.8	-48.6	0	+1.2	BASETIME = Ti TIG
	10	Ti	0/00:00:00	0	75.7	-0.9	0	+1.8	
	11	MC1	0/00:20:00	0	55.7	-0.9	0	+1.8	
170	12	MC2	0/00:48:42	28.66	27.0	-0.9	0	+1.8	
	13	MC3	0/00:17:00	0	10.0	-0.9	0	+1.8	BASETIME = MC2 TIG
	14	MC4	0/00:27:00	0	13.0	0	0	+0.6	
	19	MC2 ON TIME	0/00:00:00	0	27.0	-0.9	0	+1.8	
	9	NCC	-0/00:57:12	0	57.2	-48.6	0	+1.2	BASETIME = Ti TIG
	10	Ti	0/00:00:00	0	76.3	-0.9	0	+1.8	
	11	MC1	0/00:20:00	0	56.3	-0.9	0	+1.8	
190	12	MC2	0/00:49:18	28.85	27.0	-0.9	0	+1.8	
	13	MC3	0/00:17:00	0	10.0	-0.9	0	+1.8	BASETIME = MC2 TIG
	14	MC4	0/00:27:00	0	13.0	0	0	+0.6	
	19	MC2 ON TIME	0/00:00:00	0	27.0	-0.9	0	+1.8	
	9	NCC	-0/00:57:42	0	57.7	-48.6	0	+1.2	BASETIME = Ti TIG
	10	Ti	0/00:00:00	0	76.9	-0.9	0	+1.8	
	11	MC1	0/00:20:00	0	56.9	-0.9	0	+1.8	
210	12	MC2	0/00:49:54	29.07	27.0	-0.9	0	+1.8	
	13	MC3	0/00:17:00	0	10.0	-0.9	0	+1.8	BASETIME = MC2 TIG
	14	MC4	0/00:27:00	0	13.0	0	0	+0.6	
	19	MC2 ON TIME	0/00:00:00	0	27.0	-0.9	0	+1.8	

TARGETING DATA (Cont)

SPEC 34 ITEM NO	1			6	17	18	19	20	
TGT ALTITUDE	TGT NO	DESCRIPTION	T1 REL TO BASETIME	EL (DEG)	DT (MIN)	DX (KFT)	DY (KFT)	DZ (KFT)	NOTES
	9	NCC	-0/00:58:12	0	58.2	-48.6	0	+1.2	BASETIME = Ti TIG
	10	Ti	0/00:00:00	0	77.6	-0.9	0	+1.8	
	11	MC1	0/00:20:00	0	57.6	-0.9	0	+1.8	
230	12	MC2	0/00:50:36	29.32	27.0	-0.9	0	+1.8	
	13	MC3	0/00:17:00	0	10.0	-0.9	0	+1.8	BASETIME = MC2 TIG
	14	MC4	0/00:27:00	0	13.0	0	0	+0.6	
	19	MC2 ON TIME	0/00:00:00	0	27.0	-0.9	0	+1.8	
	9	NCC	-0/00:58:42	0	58.7	-48.6	0	+1.2	BASETIME = Ti TIG
	10	Ti	0/00:00:00	0	78.2	-0.9	0	+1.8	
	11	MC1	0/00:20:00	0	58.2	-0.9	0	+1.8	
250	12	MC2	0/00:51:12	29.55	27.0	-0.9	0	+1.8	
	13	MC3	0/00:17:00	0	10.0	-0.9	0	+1.8	BASETIME = MC2 TIG
	14	MC4	0/00:27:00	0	13.0	0	0	+0.6	
	19	MC2 ON TIME	0/00:00:00	0	27.0	-0.9	0	+1.8	
	9	NCC	-0/00:59:06	0	59.1	-48.6	0	+1.2	BASETIME = Ti TIG
	10	Ti	0/00:00:00	0	78.9	-0.9	0	+1.8	
	11	MC1	0/00:20:00	0	58.9	-0.9	0	+1.8	
270	12	MC2	0/00:51:54	29.80	27.0	-0.9	0	+1.8	
	13	MC3	0/00:17:00	0	10.0	-0.9	0	+1.8	BASETIME = MC2 TIG
	14	MC4	0/00:27:00	0	13.0	0	0	+0.6	
	19	MC2 ON TIME	0/00:00:00	0	27.0	-0.9	0	+1.8	
	9	NCC	-0/00:59:36	0	59.6	-48.6	0	+1.2	BASETIME = Ti TIG
	10	Ti	0/00:00:00	0	79.5	-0.9	0	+1.8	
	11	MC1	0/00:20:00	0	59.5	-0.9	0	+1.8	
290	12	MC2	0/00:52:30	30.03	27.0	-0.9	0	+1.8	
	13	MC3	0/00:17:00	0	10.0	-0.9	0	+1.8	BASETIME = MC2 TIG
	14	MC4	0/00:27:00	0	13.0	0	0	+0.6	
	19	MC2 ON TIME	0/00:00:00	0	27.0	-0.9	0	+1.8	
	9	NCC	-0/00:60:06	0	60.1	-48.6	0	+1.2	BASETIME = Ti TIG
	10	Ti	0/00:00:00	0	80.1	-0.9	0	+1.8	
	11	MC1	0/00:20:00	0	60.1	-0.9	0	+1.8	
310	12	MC2	0/00:53:06	30.25	27.0	-0.9	0	+1.8	
	13	MC3	0/00:17:00	0	10.0	-0.9	0	+1.8	BASETIME = MC2 TIG
	14	MC4	0/00:27:00	0	13.0	0	0	+0.6	
	19	MC2 ON TIME	0/00:00:00	0	27.0	-0.9	0	+1.8	

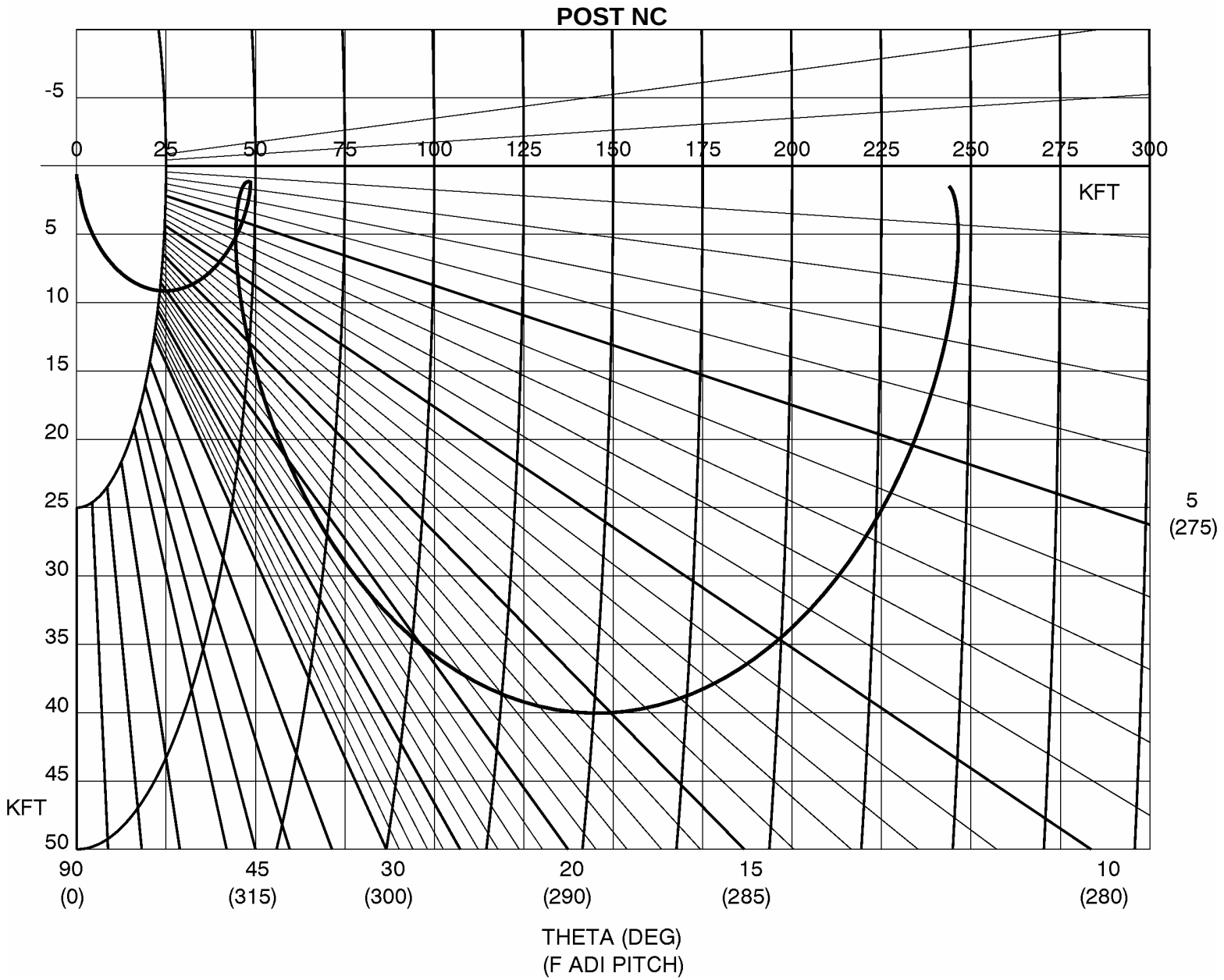
POST NC
-5
0
25
50
75
100
125
150
175
200
225
250
275
300
KFT
5
10
15
20
25
30
35
40
45
KFT
50
5
(275)
90
(0)
45
(315)
30
(300)
20
(290)
15
(285)
10
(280)
THETA (DEG)
(F ADI PITCH)

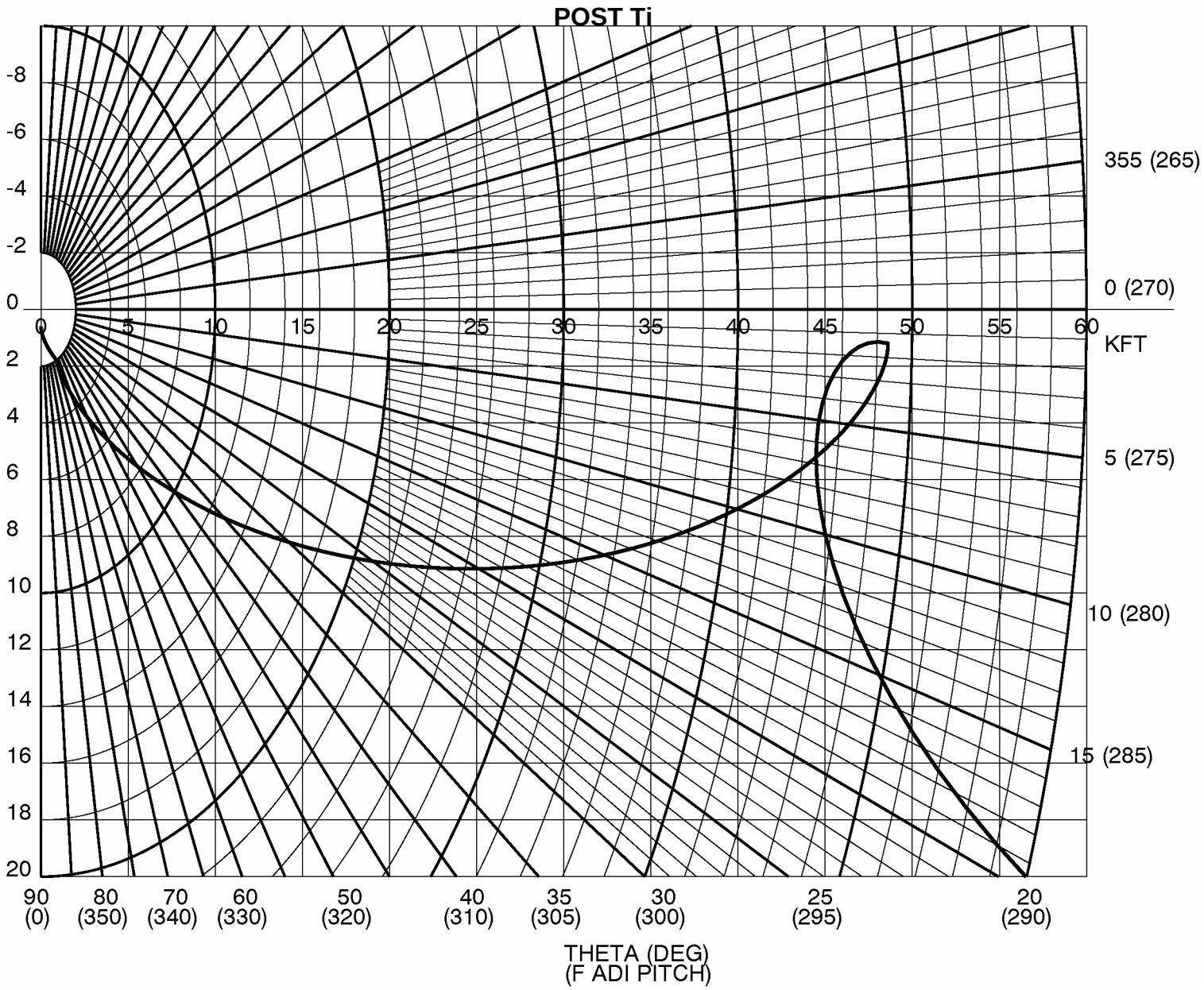
POST Ti
-8
-6
-4
-2
0
2
4
6
8
10
12
14
16
18
20
0
5
10
15
20
25
30
35
40
45
50
55
60
KFT
355 (265)
0 (270)
5 (275)
10 (280)
15 (285)
90 (0)
80 (350)
70 (340)
60 (330)
50 (320)
40 (310)
35 (305)
30 (300)
25 (295)
20 (290)
THETA (DEG)
(F ADI PITCH)

POST MC3

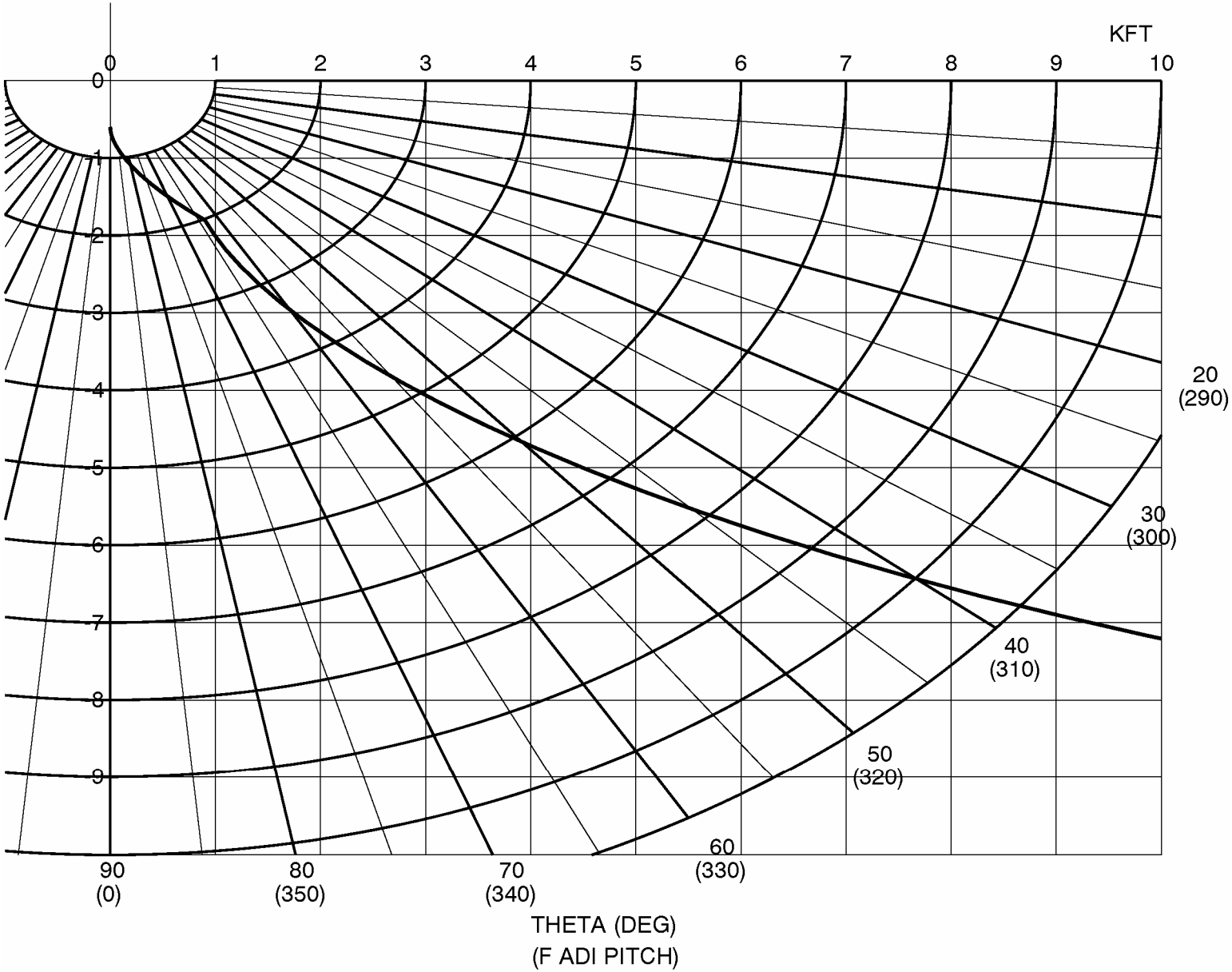
KFT
0
1
2
3
4
5
6
7
8
9
10
20
(290)
30
(300)
40
(310)
50
(320)
60
(330)
90
(0)
80
(350)
70
(340)
THETA (DEG)
(F ADI PITCH)

TCS REFLECTOR VISIBILITY DURING APPROACH

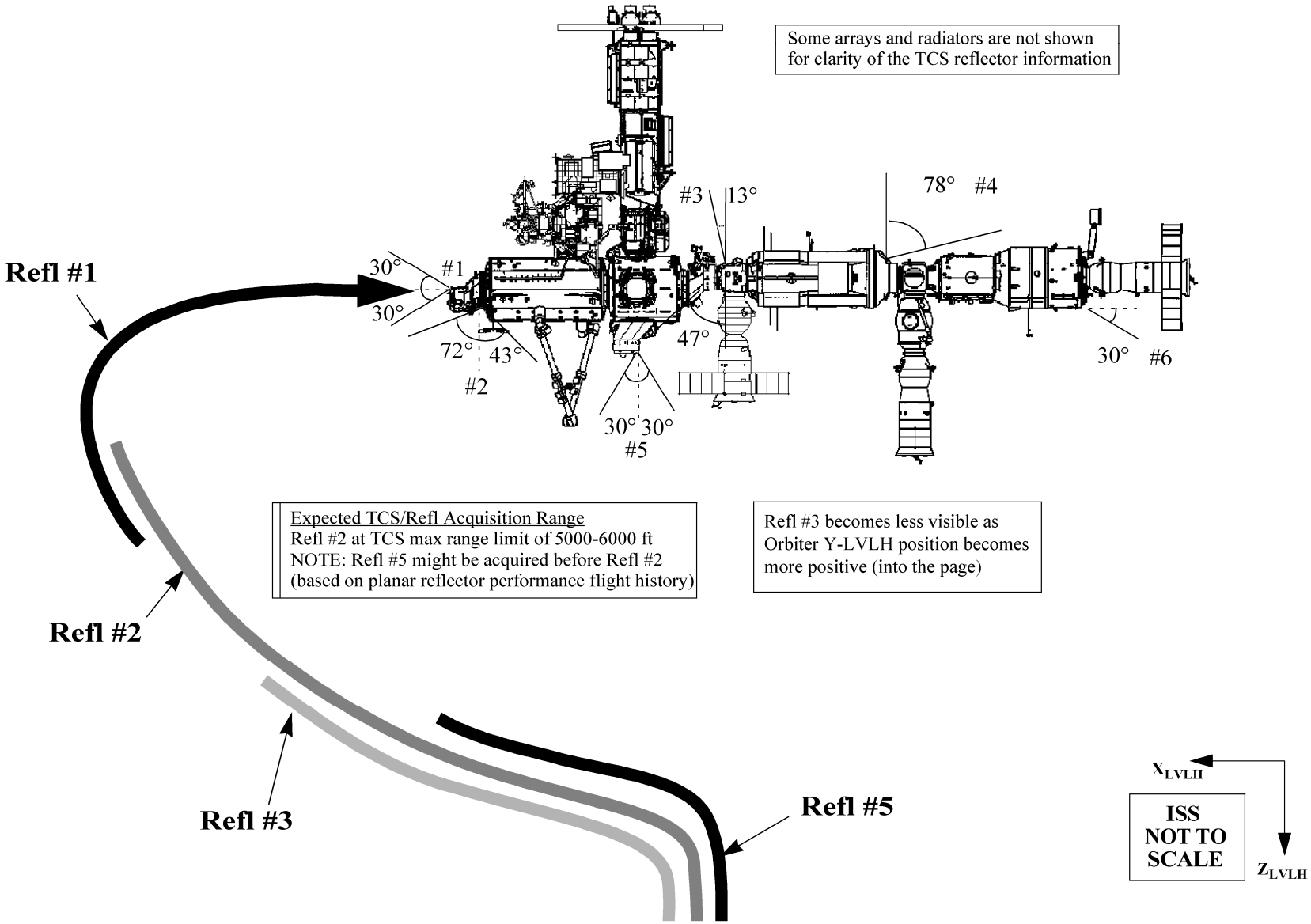

HHL AIMING LOCATIONS

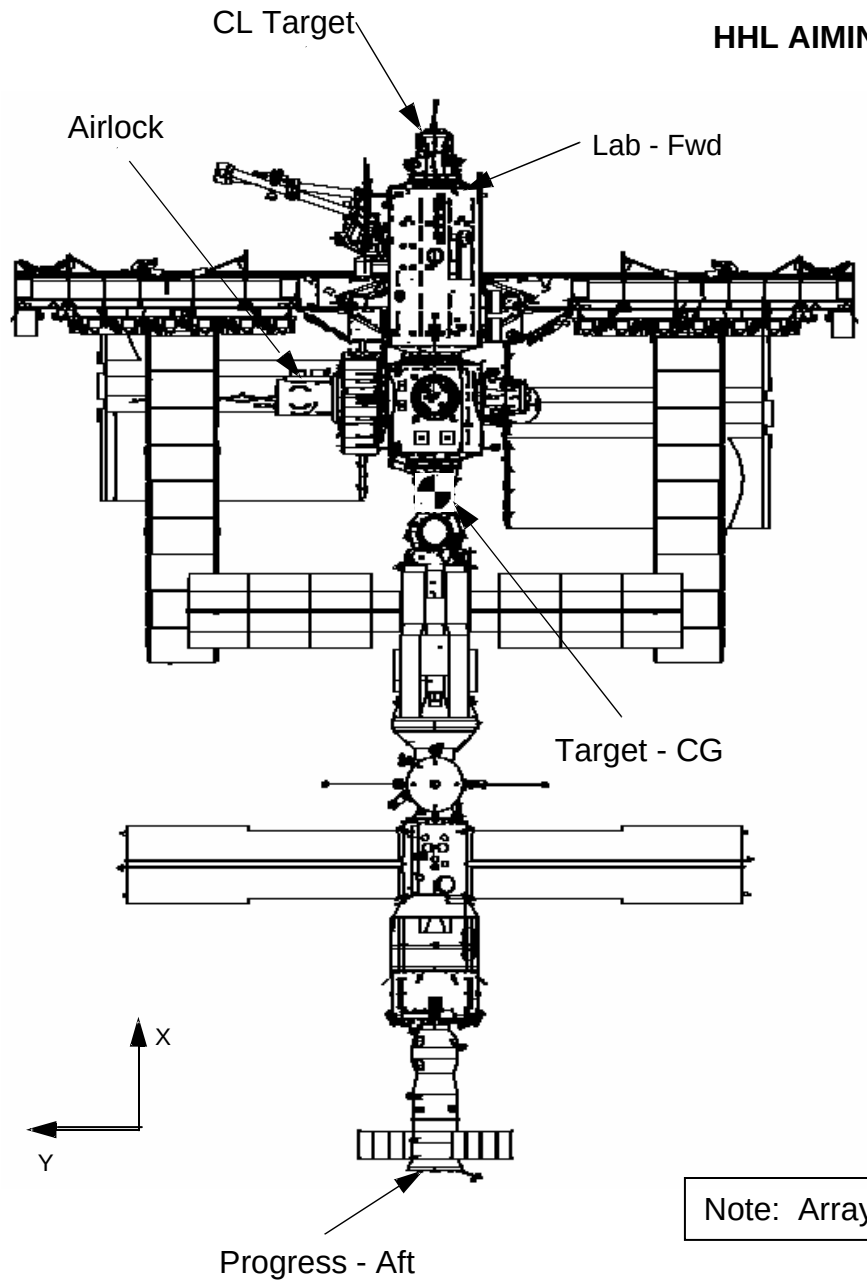

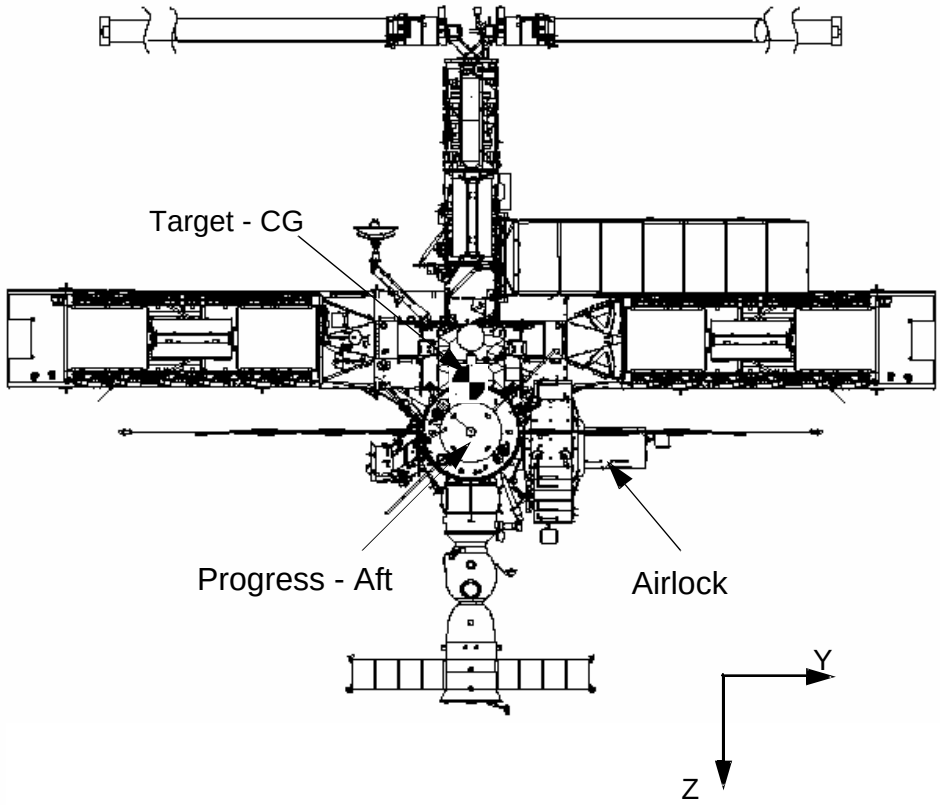

Note: Array Feathering Not Shown

SHUTTLE CENTERLINE TARGET

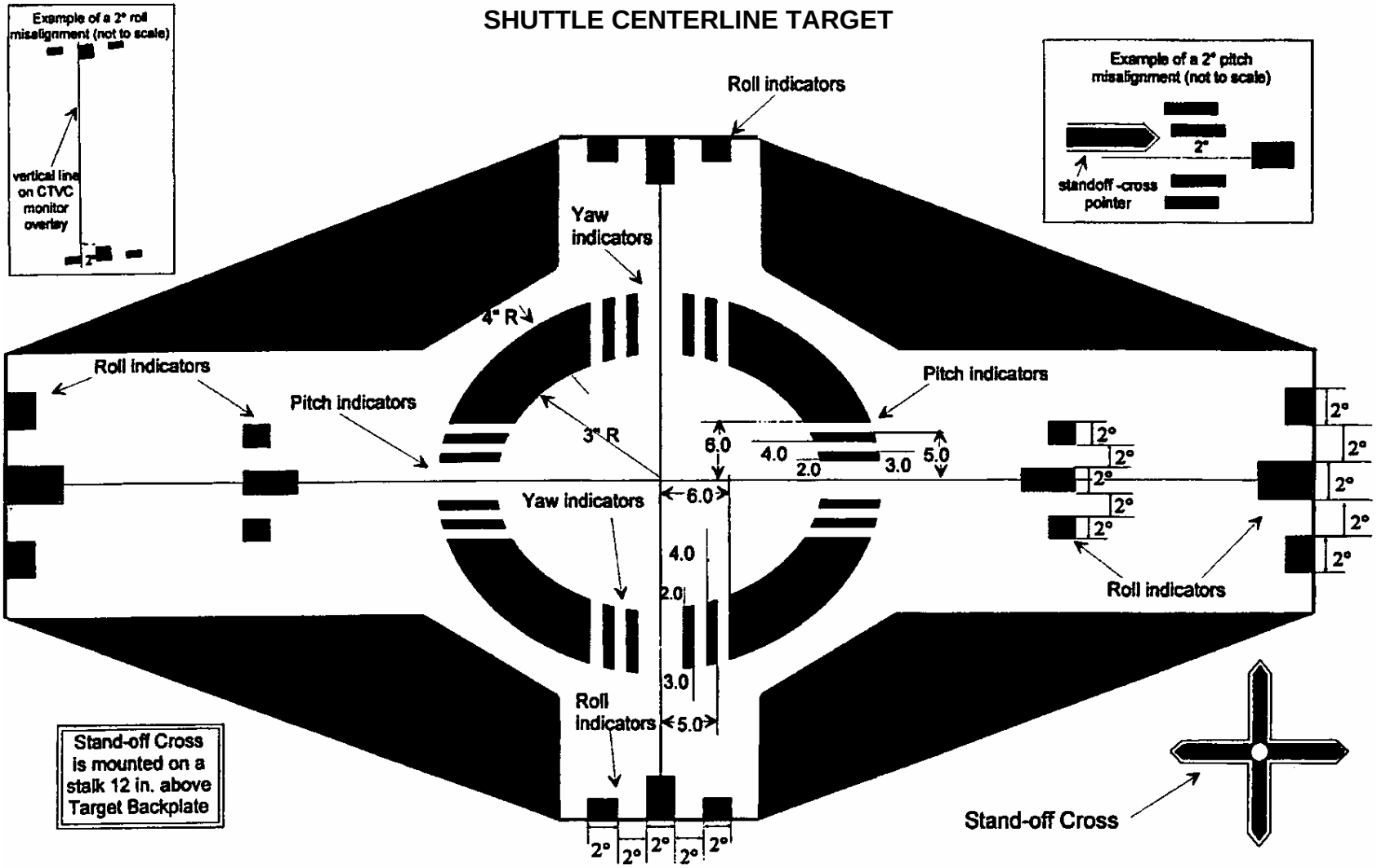

Roll indicators are to be used with the vertical and horizontal lines on the CTVC monitor overlays. All six sets of roll indicators are sized to give roll misalignments in increments of 2 degrees. At least two sets of roll indicators on opposite sides of the target backplate are required during roll misalignment determination (see roll misalignment example). The outer roll indicators (extra set on horizontal axis) may not be used with the inner roll indicators

Pitch and yaw indicators are to be used with the pointers on the stand-off cross (see pitch misalignment example). Both sets of pitch indicator and yaw indicators are sized to give misalignments in increments of 2, 3, 4, 5, and 6 degrees.

ISS ATTITUDE CONTROL SYSTEM MODING INDICATORS

- INDICATOR LIGHTS STEADY — ISS ACS ACTIVE
- INDICATOR LIGHTS FLASHING — ISS IN FREE DRIFT
- INDICATOR LIGHTS OFF — LIGHTS FAILED OR SOFTWARE OFF

Unit/LEDs	MDM	Card/Channel
Unit 1 LEDs 1 & 2	LA-1	DIO Card Slot 4 Channel 13
Unit 1 LEDs 3 & 4	LA-1	DIO Card Slot 4 Channel 14
Unit 2 LEDs 1 & 2	LA-2	DIO Card Slot 4 Channel 13
Unit 2 LEDs 3 & 4	LA-2	DIO Card Slot 4 Channel 14

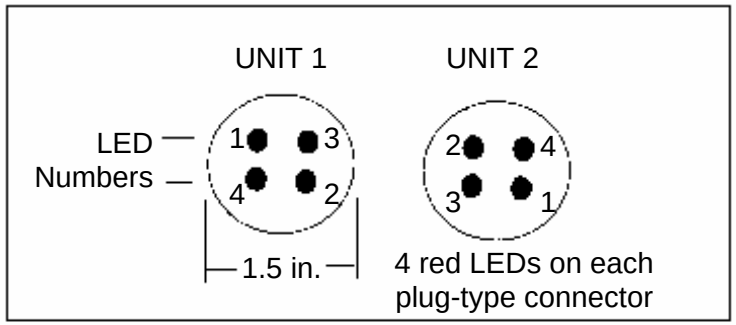

Bottom View

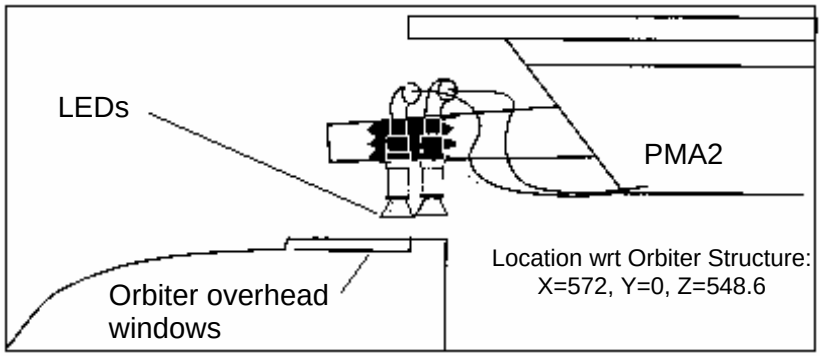

Side View

RANGING CHARTS

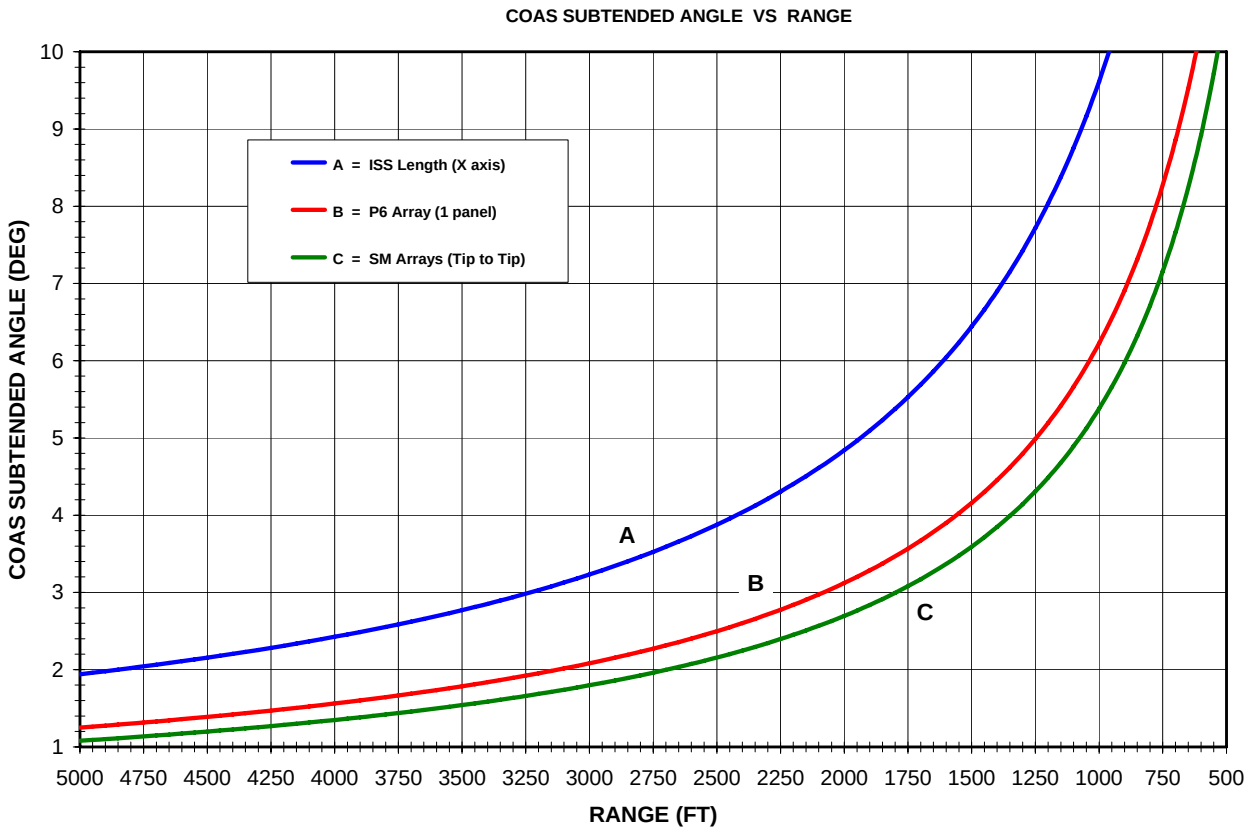

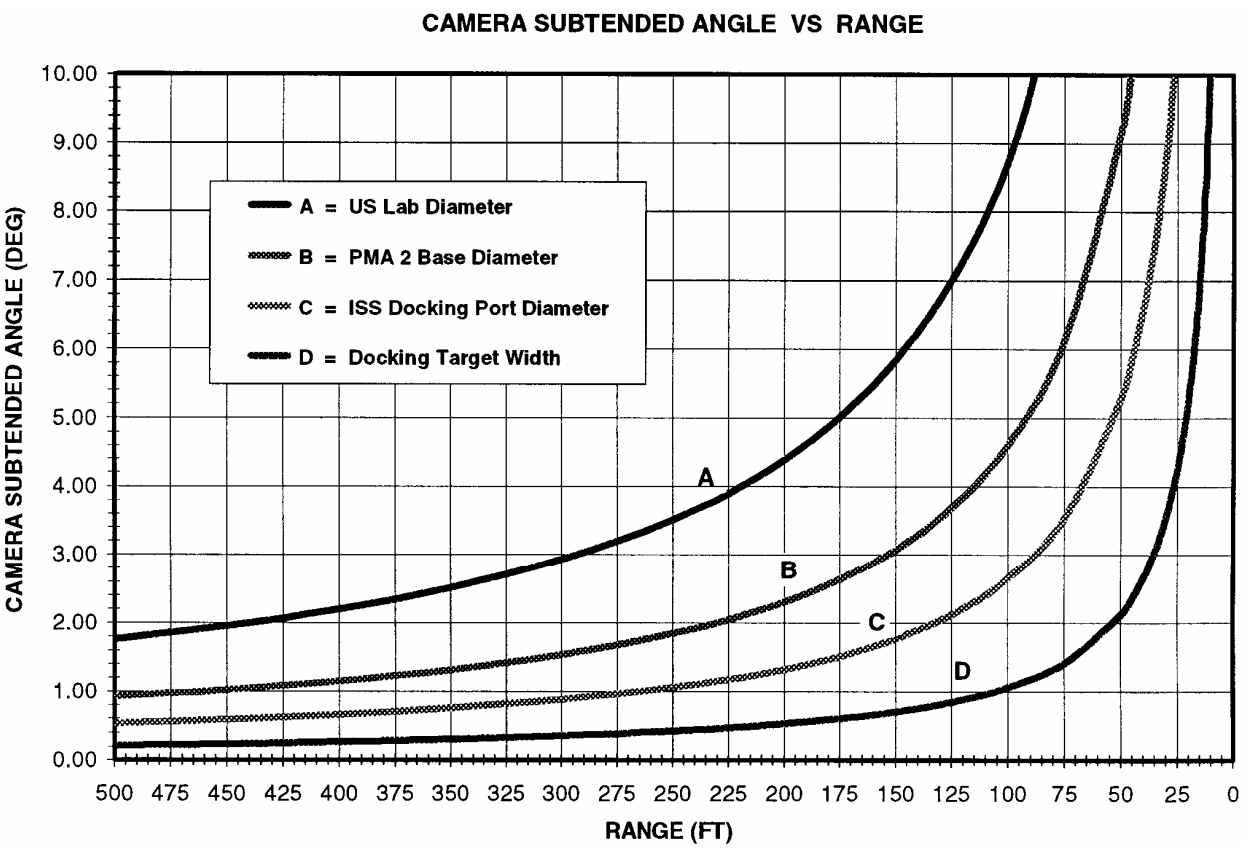

COAS SUBTENDED ANGLES (DEG) VS RANGE (FT)
(SA DIMENSIONS TIP TO TIP)

Deg	SM SA	FGB SA	Lab Dia.
0.5	11178	9046	1730
1	**5589**	**4523**	**865**
1.5	3726	3015	577
2	**2794**	**2261**	**433**
2.5	2235	1809	346
3	**1863**	**1507**	**288**
3.5	1596	1292	247
4	**1397**	**1130**	**216**
4.5	1241	1005	192
5	**1117**	**904**	**173**
5.5	1015	822	157
6	**931**	**753**	**144**
6.5	859	695	133
7	**797**	**645**	**123**
7.5	744	602	115
8	**698**	**564**	**108**
8.5	656	531	102
9	**620**	**502**	**96**
9.5	587	475	91
10	**558**	**451**	**86**
10.5	531	430	82
11	**507**	**410**	**78**
11.5	484	392	75
12	**464**	**376**	**72**

RENDEZVOUS TOOLS

CCTV CONFIG FOR DOCKING/UNDOCKING 7-2
RNDZ TOOLS CHECKOUT 7-4
TROUBLESHOOTING 7-5
HAND-HELD LIDAR CHECKOUT 7-6
STOW 7-6
OPS 7-7
RPOP INITIALIZATION 7-8
OPS 7-9
FUNCTION KEY SUMMARY 7-11
KEYSTROKE SUMMARY 7-15
TRAJECTORY DATA SOURCE OPTIONS 7-16
TCS ACTIVATION 7-18
MANUAL ACQUISITION 7-19
DEACTIVATION 7-20
LIMITS 7-21
TRAD FAIL RANGE AND RANGE RATE DETERMINATION 7-21
NOMINAL OPS 7-21
RADAR FAIL 7-22
TCS FAIL 7-22
HHL FAIL 7-22
PCMMU/WINDECOM FAIL 7-23
PGSC FAIL (NO PROP, NO TCS) 7-23

CCTV CONFIG FOR DOCKING/UNDOCKING

1. ACTIVATION
   Perform ACTIVATION (Cue Card, TV)
   √Monitors set to USCAN – ON
   √MCC: VSU Sync/Async configuration

   Pwr up Cameras for Docking/Undocking:
   CENTERLINE
   Camrs A,C,D
   Camr B
   Install Monitor Sunshades

2. SET CCTV CAMERA FUNCTIONS
   2.1 For Centerline Camera:
   ALC pb – press
   AVG pb – press
   √GAM BLK STR – ON
   √COLOR BAL – SUN
   2.2 For Cameras A,C,D:
   ALC pb – press
   AVG pb – press
   GAM BLK STR – ON
   √COLOR BAL – SUN
   SHUTTER – ON pb press as reqd
   2.3 For Camera B:
   ALC pb – press
   AVG pb – press
   LT LEVEL pb – press
   NIGHT pb – press
   GAM BLK STR – ON

3. SET CAMERA ZOOM SETTINGS

CAMERA	ZOOM	OVERLAY
Centerline	40.0° (Corridor)	Corridor
	10.1° (full zoom)	Grid

4. MONITOR SETUP
   MON 1,2 L-DATA – on
   C-DATA – grn
   XHAIR – grn

5. CAMERA SETUP – CAMERA A,D
A7 MON 2 – Camr A (Range Ruler), D (Backup Range Ruler)
   Zoom = 74.4° FOV (full unzoom), Focus = 12 ft
   Pan: as reqd to center ODS in monitor (see figure next page)
   Tilt: as reqd until bottom of ODS Interface Ring touches bottom of screen (see figure next page)

6. FINAL CONFIG FOR APPROACH AND UNDOCKING/SEP
   MON 1 – CENTERLINE
   MON 2 – RANGE RULER

   Install CORRIDOR overlay:
   Use green XHair to center overlay

   Install RANGE RULER overlay:
   Place contact ring tangent line on top of ODS Contact Ring (see figure next page)

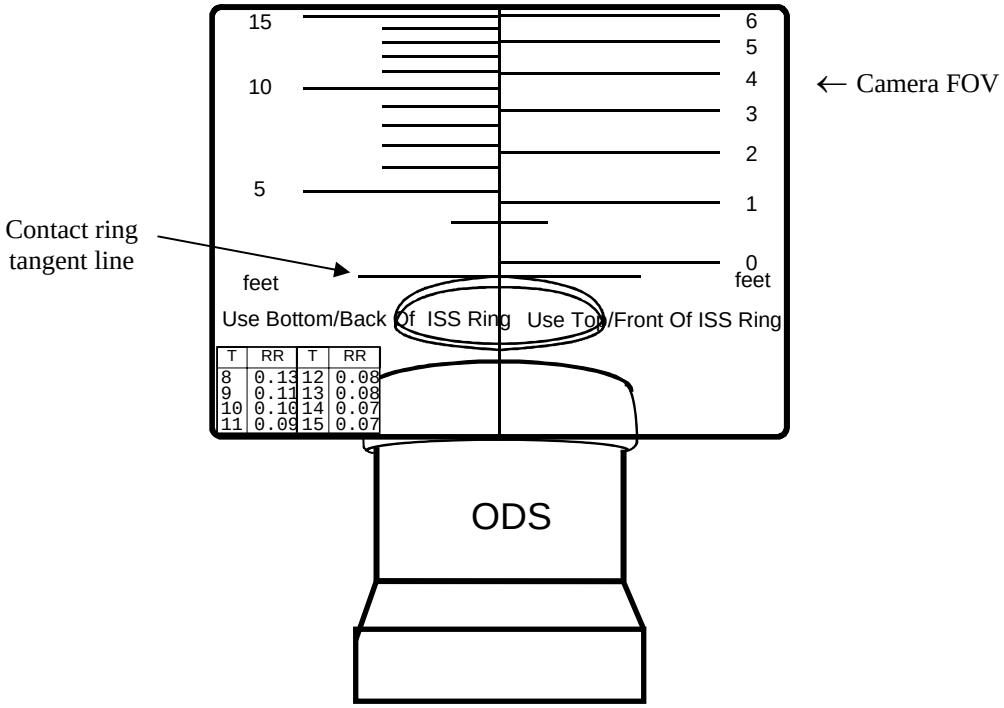

Camr A,D Range Ruler Vew
Approach Config

RNDZ TOOLS CHECKOUT

1. √MCC uplink to TGT SV
   GNC 33 REL NAV
   RNDZ NAV ENA – ITEM 1 EXEC (*****)

2. √RNDZ TOOLS connected per PGSC Usage Chart (if available) or UTILITY OUTLET PLUG-IN PLAN ORBIT CONFIGURATION (REF DATA FS, UTIL PWR)

3. Perform WINDECOM OPS – ACT (ORB OPS, PGSC)

4. Perform RPOP INITIALIZATION, steps 1 thru 6, 7-8

   On MCC GO:
5. Perform TCS ACTIVATION, steps 1 and 2, 7-18

6. Perform HAND-HELD LIDAR CHECKOUT, 7-6

7. When checkout complete, perform TCS DEACTIVATION, 7-20, then:
   Exit RPOP – [SHIFT]/[F10], then:
   HHL PWR SW – OFF, then:
   Temp stow Rndz Tools as reqd

8. GNC 33 REL NAV
   RNDZ NAV ENA – ITEM 1 EXEC (no *****)

RNDZ TOOLS TROUBLESHOOTING

Notify MCC of problem; then perform each step from appropriate procedure, one at a time, until functionality restored. Troubleshooting steps assume RPOP is configured to receive PCMMU data via the RS-422 data cable

TCS CADS NOT RECEIVING TCS DATA

1. √Windows system tray for PC card icon to verify good connection to MCIU/Quatech card
2. √TX/RX end of TCS data cable connected to MCIU/Quatech card COM2
3. √Correct port config in TCS CADS s/w
4. Quit and restart TCS CADS
5. Change out TCS data cable and MCIU/Quatech card
6. Reboot PGSC and restart TCS CADS
7. On MCC GO, perform TCS DEACTIVATION, 7-20, followed by TCS ACTIVATION, 7-18
8. √MCC

RPOP NOT RECEIVING PCMMU DATA

1. √Windows system tray for PC card icon to verify good connection to MCIU/Quatech card
2. √Correct end of RS-422 Y data cable connected to MCIU/Quatech card COM4
3. √Correct port config in RPOP s/w
4. Quit and restart RPOP
5. Change out RS-422 Y data cable and MCIU/Quatech card
6. Reboot PGSC and restart RPOP
7. √MCC

RPOP NOT RECEIVING HHL DATA

1. √HHL cable securely connected to HHL unit and COM1
2. √RPOP port config set to COM1 for HHL
3. Quit and restart RPOP
4. Reboot RPOP PGSC and restart RPOP
5. Connect HHL cable to backup RPOP PGSC COM1 to check data flow. Swap to backup HHL data cable or backup HHL as reqd
6. √MCC

RPOP NOT RECEIVING TCS DATA (TCS CADS IS RECEIVING DATA ON SAME PGSC)

1. √RPOP configured to receive TCS data via DLL
2. Quit and restart RPOP
3. Reboot RPOP PGSC and restart RPOP and TCS CADS
4. √MCC

HAND-HELD LIDAR CHECKOUT

1. Unstow HHL, Battery Pack(s), and RS-232 cable

   Connect RS-232 cable from HHL to PGSC
   Plug Battery Pack into HHL

   Verify RPOP program enabled per RPOP INITIALIZATION, 7-8

2. Perform HAND-HELD LIDAR OPS, 7-7

3. Take multiple (~10) Range and Velocity measurements using top center of aft PLB bulkhead or S0 Truss Segment as TGT
   √HHL data received by RPOP (HHL trajectory source must be selected)

   Range check:
   √Range from aft port window to bulkhead = 60 ft
   or
   √Range from overhead window to S0 Truss Segment = ~23 ft

   Velocity check:
   Depress trigger for 5 sec
   √Velocity = 0.0 fps

   Report range and velocity discrepancies to MCC

   Self-Test: Press and hold Test Mode button, √8.8.8.8. Select range

HAND-HELD LIDAR STOW

Power sw – OFF

Remove RS-232 cable
Unplug Battery Pack

Stow HHL, Battery Pack(s), and RS-232 cable

HAND-HELD LIDAR OPS

Power sw – ON

NOTE

If msg 'LoB' or flashing 8888 on display or irregular tone emitted, replace battery

Display Intensity knob – Adjust intensity to minimum acceptable level

Select Range or Velocity decimal place by toggling RANGE/VELOCITY buttons
- Range pb – 1 ft or 0.1 ft
- Velocity pb – 0.1 fps or 0.01 fps

Center red dot on TGT

Depress trigger for each measurement
Hold trigger for velocity measurements

Velocity accuracy increases with trigger hold duration:

Duration	Accuracy
0.5	0.15
1.0	0.06
2.0	0.03
5.0	0.01

To verify lock-on (if desired):
1. Push Test Mode button
2. Center red dot on TGT
3. Depress and hold trigger. Pitch on tone proportional to received signal strength
4. Press Range or Velocity button to return to Operational Mode

Error Codes:
- E01 Never acquired target because target out of range or target too close
- E02 Excessive percentage of total laser pulses in measurement sample unsatisfactory
- E03 Excessive number of consecutive laser pulses in measurement sample unsatisfactory

RPOP INITIALIZATION

NOTE

Do not connect RS232 cable (with data flowing over it) to PGSC prior to PGSC powerup

1. Power on RPOP/TCS PGSCs
   √Data, pwr cables installed per PGSC Usage Chart (if available) or UTILITY OUTLET PLUG-IN PLAN, ON-ORBIT CONFIG (REF DATA FS, UTIL PWR)

2. From Startup Menu, select appropriate Expansion Chassis config

3. Select Shuttle Apps Icon
   Select RPOP folder
   Select appropriate RPOP icon
   RPOP logo display
   RPOP Initialization

4. Enter current MET:
   Days>____/Hrs>___:Min>___:Sec>___

   Click [OK] to continue

   NOTE

   Time synchronized on [OK]

5. √PCM selected – status displayed above F6 ([CTRL]/[F6] to enable/disable)
   √RPOP is receiving PCMMU data

   If no target state vector on board, expect flashing error msg
   If target state vector on board but rel nav not enabled, expect bad relative state

6. Update target LVLH attitude as reqd – [SHIFT]/[F6]
   Enter Target Vehicle Attitude Info
   Select appropriate Attitude (PYR Seq.)

   Pitch > _____ Yaw > _____ Roll > _____

   Select appropriate attitude rate

   Enter rates (as reqd)

   Click [OK] to continue

RPOP OPS

1. √RPOP SETUP complete:
   √RPOP window title bar – verify mission specific scenario
   In upper right corner of Trajectory Display:
   √Time – counting as reqd
   √RPOP configuration – as reqd (Pitch, Alt)

2. Begin processing trajectory data:
   Configure/input trajectory data as needed per RPOP FUNCTION KEY SUMMARY (Trajectory Data Keys)

3. Update MET (as reqd):
   [CNTL]/[F10]
   RPOP Configuration

   Select [Update MET. . .] button
   Update MET

   Update MET and click [OK] when finished

4. Reconfig Serial Ports (as reqd):
   [CNTL]/[F10]
   RPOP Configuration

   Select [Comm Ports. . .] button
   RPOP Communications Setup

   Reconfig desired com ports/DLL and click [OK] when finished

   NOTE
   TCS source for RPOP must be set to DLL

5. Reconfig TCS No./Reflector No. Settings (as reqd):
   [CNTL]/[F10]
   RPOP Configuration

   Select [TCS/Refl. . .] button
   Select TCS/Reflector Set

   Reconfig desired TCS No. and/or Reflector No. and click [OK] when finished

6. Config Average Rdot guidance (as reqd):
   Select Guid – [CTRL]/[F5]
   Select Guidance Type

   Select [Average Rdot] button – [A]
   Enter time until docking (countdown time)
   Min > _____
   Sec > _____
   Select [Start]. Timer starts when [Start] pressed
   Click [OK] when finished

Cont next page

7. Configure TCS NAV (as reqd):
   Select [Data] key for the TCS (CTRL row in columns F1 through F4)
   If there is no [Data] key for TCS, reconfigure data source for TCS
   [F#-TCS]
   Select Nav option – [N]
   Click [OK] when finished

8. Configure HHL NAV (as reqd):
   Select [Data] key for the HHL (CTRL row in columns F1 through F4)
   If there is no [Data] key for HHL, reconfigure data source for HHL
   [F#-HHL]
   Select [HHL Nav. . .] config button – [ALT]/[H]
   HHL Nav Configuration
   Enable HHL Nav (if unchecked) – [H]
   Click [OK] to close HHL Nav dialog
   Click [OK] or [Update Settings] to close HHL dialog

9. Configure OOP, Glideslope, or +Vbar Acquisition Guidance (as reqd):
   Select Guid – [CTRL]/[F5]
   [Select Guidance Type]
   Select [OOP Control] – [O]
   Select [Glideslope Control] – [G]
   Select [+Vbar Acquisition] – [V]
   Click [OK] when finished.

   NOTE
   Glideslope Control with Init:Auto must first be selected to make +Vbar Acquisition available

10. Change configuration and/or input data as reqd per RPOP FUNCTION KEY SUMMARY
    Move axes or zoom in/out as desired per RPOP KEYSTROKE SUMMARY
    Use [SPACEBAR] to toggle on-screen Function Key Menu ON/OFF
    Use [F10] for HELP
    Use [F11] to cycle thru declutter levels
    Use [F12] to snap a range ruler mark; [SHIFT]/[F12] to delete it

11. To exit RPOP program – [SHIFT]/[F10]

RPOP FUNCTION KEY SUMMARY

TRAJECTORY DATA KEYS (Columns F1 → F4)

[F1→F4]
(SV, RR, HHL, CCTV or TCS)

PRIME KEY
Make this Trajectory Prime Trajectory
- Only one trajectory can be Prime at a time
- Prime Trajectory has orbiter graphics, predictors, and color-coordinated digital data

[SHIFT]/[F1→F4]
(Show/Hide)

SHOW/HIDE KEY
Show or Hide this Trajectory (toggle)
- Prime Trajectory cannot be hidden
- Background processing of trajectory continues even when hidden (Exception: HHL trajectory data will not prompt for user input when hidden)

[CTRL]/[F1→F4]
(Data)

DATA KEY
Configure/input data for trajectory
- Allows user to configure specific Trajectory Data Source Options
- Allows user to input manual data
- Allows user to reconfigure function key to another Trajectory Data Source
- Duplicate Trajectory Data Source configurations are permitted (e.g., HHL could be configured for both F3 and F4, if desired)

NOTE

Although duplicate data source configurations are permitted, duplicate automatic data modes (namely, State Vector, RR Auto, TCS Auto and TCS Nav) are not permitted. In such a situation, duplicated auto mode option grayed out in Trajectory Data Source Options dialog box

GENERAL FUNCTION KEYS (Columns F5 → F12)

[F5] (Rdot)	RDOT WINDOW Toggles display of Rdot Window
[SHIFT]/[F5] (Orb Att)	ORBITER ATTITUDE Update orbiter attitude and attitude rate
[CTRL]/[F5] (Guid)	GUIDANCE Select guidance cues on demand Available options are: CW Targeting – given a burn time, transfer time, and desired LVLH position, CW Targeting will provide required THC inputs OOP Control – provides THC recommendations for controlling out-of-plane motion Glideslope Control – provides THC recommendations for flying the final approach along a glideslope +Vbar Acquisition – provides THC recommendations for acquiring the +Vbar in preparation for final approach LVLH Velocity Null – provides THC recommendations for nulling LVLH velocities in each direction Average Rdot – information for timed approach
[F6] (Sub Ang)	SUBTENDED ANGLE Enter subtended angle in Rdot Window to get range and range rate. Only active when SubAng source active on Rdot Window
[SHIFT]/[F6] (Tgt Att)	TARGET ATTITUDE Update Target attitude and attitude rate
[CTRL]/[F6] (PCMMU)	PCMMU MODE No PCM mode (displays No PCM) Requires orbiter attitude data to be entered manually with each sensor mark PCM MODE (displays PCM) Orbiter attitude is automatically computed using PCMMU data
[F7] (View)	VIEW If Tgt-Centered LVLH, cycle through views: XZ, XY, YZ If Orb-Centered LVLH, cycle through views: XZ, XY, YZ, CAM View identification displayed upper left-hand corner of Trajectory Display
[SHIFT]/[F7] (Ovrlay)	OVERLAY Cycle through displays of overlays
[CTRL]/[F7] (OvrOrgn)	OVERLAY ORIGIN (*Available only if Overlay is enabled)* Toggle anchor point of corridor overlay between Target vehicle attach point and orbiter attach point
[F8] (Tgt/Orb)	REFERENCE FRAME Toggle display between Tgt-Centered LVLH plot and Orb-Centered LVLH plot
[SHIFT]/[F8] (Low Z)	LO Z Toggle jet-select between No Low Z and Low Z for making THC “What If” inputs. Displays Low Z
[CTRL]/[F8] (POR)	POINT OF REFERENCE Cycle through preselected orbiter Point-Of-Reference to Target Point-Of-Reference sets (e.g., CG to CG, Dock Port to Dock Port)

GENERAL FUNCTION KEYS (Columns F5 → F12) (Cont)

[F9]
(THC Clr)

THC CLEAR
Clear THC "What if" inputs from the Prime Trajectory

[SHIFT]/[F9]
(TrajClr)

TRAJECTORY CLEAR
Clear Prime Trajectory history of all but 2 most recent data inputs

[CTRL]/[F9]
(Back 1)

BACK 1
Delete last data input from the Prime Trajectory

[F10]
(Help)

HELP
Access on-line help information

[SHIFT]/[F10]
(Exit)

EXIT
Save output files and exit RPOP program

[CTRL]/[F10]
(Config)

RPOP CONFIGURATION
Configure following RPOP options:

<u>Debug</u>
Enable serial port I/O debug text to be displayed. Displays Debug

<u>Data Freq...</u>
Change frequency of automatic acceptance (plotting) of PCM data (SV or RR Auto) or TCS data (TCS Auto)

<u>Predictors...</u>
Change number and/or time increment of displayed predictors

<u>Update MET...</u>
Change the mission elapsed time

<u>Altitude...</u>
Change altitude of target vehicle

<u>Comm Ports...</u>
Reconfigure serial ports and/or the DLL

<u>TCS/Refl...</u>
Select TCS ID number (1-2) and reflector ID number (1-6)

<u>Views...</u>
Enable/disable Tgt- and Orb-Centered views

<u>NOTE</u>
Currently displayed view (both Tgt- and Orb-Centered) cannot be disabled

<u>THC "What if"...</u>
Select DAP setting (trans pulse size) to be used for THC "What if" inputs
Options include: Rndz DAP, Prox Ops DAP, and a User-Configurable DAP

[F11] DECLUTTER
Cycle RPOPs display through three different levels of declutter

[F12] RANGE RULER SNAP
Computes range rate based on time between snaps and assumed delta range interval. Feature available only if I-loaded delta range interval has non zero value

[SHIFT]/[F12] RANGE RULER CLEAR
Clears range ruler display from screen. Feature available only if I-loaded delta range interval has non zero value

RPOP KEYSTROKE SUMMARY

[CTRL]/[←] or l	Move Vertical axis left
[CTRL]/[→] or r	Move Vertical axis right
[CTRL]/[↑] or u	Move Horizontal axis up
[CTRL]/[↓] or d	Move Horizontal axis down
[CTRL]/[PGUP]	Zoom IN on Trajectory Display
[CTRL]/[X]/[PGUP]	Zoom IN on X axis only
[CTRL]/[Y]/[PGUP]	Zoom IN on Y axis only
[CTRL]/[Z]/[PGUP]	Zoom IN on Z axis only
[CTRL]/[PGDN]	Zoom OUT on Trajectory Display
[CTRL]/[X]/[PGDN]	Zoom OUT on X axis only
[CTRL]/[Y]/[PGDN]	Zoom OUT on Y axis only
[CTRL]/[Z]/[PGDN]	Zoom OUT on Z axis only

NOTE

Use [SHIFT] in combination with any of above keystrokes in order to scale/move axes in finer increments. Each view may be independently scaled and/or autoscaled

[CTRL]/[HOME]	Resume autoscaling and reset scale
[SPACEBAR]	Toggle on-screen Function Key Menu ON/OFF

THC "What if" (-Z sense) Keystrokes (Prime Trajectory only)

	DAP A8	DAP B8
Z IN	[SHIFT]/[→]	[→]
Z OUT	[SHIFT]/[←]	[←]
X UP	[SHIFT]/[↑]	[↑]
X DOWN	[SHIFT]/[↓]	[↓]

TRAJECTORY DATA SOURCE OPTIONS

SV STATE VECTOR

Options include:

State Vector – Enable automatic acceptance of the Onboard Nav states
None – Turn State Vector processing off
Config... – Reconfigure Trajectory Data Source for this function key

RR RENDEZVOUS RADAR

Options include:

Manual – Manually enter Radar RNG, EL and AZ
Auto – Enable automatic acceptance of Radar RNG, EL and AZ
None – Turn Radar processing off
Config... – Reconfigure the Trajectory Data Source for this function key

HHL HANDHELD LASER

Manually select HHL Aim Point, Angle Source, and Angle Source Aim Point
Manually enter HHL RNG and two Angle Source angles (an in-plane and out-of-plane)

Options include:

Lock – Hold the in-plane angle constant (locked) for each HHL mark
Lock – Hold the out-of-plane angle constant (locked) for each HHL mark
Update Settings – Accept configuration changes to Aim Points, Angle Source, and Lock option without incorporating a trajectory mark
HHL Nav. . . – HHL Nav activation (on/off) and configuration (display resids and ratios, force measurements, reinitialize, length of trigger pull (short/long or long only))
Config... – Reconfigure the Trajectory Data Source for this function key

Angle Source options include:

Fwd CCTV, Aft CCTV, Dock Cam, COAS, Radar, TCS, *Other*, None

NOTE

Manual inputs reqd for all angle sources except Radar, TCS and None. If Radar or TCS selected, angles will be automatically snapped (if available). *Other* camera is *optional*, and may be completely specified via I-load

Aim Point options include:

HHL Aim Pt, Tgt CG, *Point of Interest #1, Point of Interest #2, Point of Interest #3*

NOTE

HHL Aim Pt is always available and may be completely specified via I-load. Tgt CG is always available *Points of Interest 1-3* are *optional*, and may be completely specified via I-load. For Angle Source Radar, angle aim point is Tgt CG. For Angle Source TCS, angle aim point is current reflector number

CCTV CLOSED CIRCUIT TELEVISION CAMERAS

Manually enter FWD and AFT CCTV tilt angles

Options include:

Config... – Reconfigure Trajectory Data Source for this function key

TCS TRAJECTORY CONTROL SENSOR

Options include:

- Manual – Manually enter TCS RNG, EL and AZ
- Auto – Enable automatic acceptance of TCS RNG, EL and AZ
- Nav – Enable TCS NAV (Kalman Filtering)
  - Display Resids and Ratios
  - Force Measurements
  - Re-Initialize on [OK]
- None – Turn TCS processing off
- Config – Reconfigure the Trajectory Data Source for this function key

TCS ACTIVATION

1. CADS BOOTUP

√RPOP/TCS PGSC powered ON

PGSC √Data cables installed per PGSC Usage Chart (if available) or UTILITY OUTLET PLUG-IN PLAN ORBIT CONFIGURATION (REF DATA FS, UTIL PWR)

SHUTTLE APPS

> TCS

2. TCS PWRUP/INITIALIZATION

L12 TCS PWR – ON (tb-gray)

* If tb – bp, cycle sw *
* If no joy, notify MCC *

PGCS TCS Self Test

	Status	Override
√Shutter:	Passed	Off
√Z Latch:	Passed	Off
√CW Laser:	Passed	Off
√Pulse Laser:	Passed	Off

√MSG: INITIALIZATION COMPLETE

* If error msg received during initialization, *
* √MCC *

TCS OPS

√Mode:	Stby
√Z Latch:	Unlocked
√Pulse:	Avail
√CW:	Active

* If not in config, *
* √MCC *

3. TIME REFERENCE SELECT

TCS C&DI

Commands > Send TCS Time

CAD Clock

Enter MET

> Send

√Messages – 'TCS Clock has been set'

4. ENABLE AUTO ACQUISITION

TCS C&DI

> Config > Automatic > Acquisition

Update 'Maximum Range' for auto acquisition to begin as desired

> OK

Inform MCC of range entered

TCS MANUAL ACQUISITION

1. <u>ACQUIRE</u>

PGSC TCS OPS

√Pulse: Avail
√CW: Active

TCS C&DI
> Macros > ACQUISITION

Target Acquisition Data
Input current estimate of range to Target and zero for Azimuth and Elevation:
RANGE > _____
AZIMUTH > _____
ELEVATION > _____

√95% RANGE GATE – (no X)
> SEND

TCS OPS
If first acquisition:
√Shutter – Open (after ~22 sec)

```
* If shutter fails to open:              *
*     > Commands > Standby               *
*     > Commands > Open Shutter          *
*     > Commands > Acquire               *
```

√Data – Good (and active tracking data)

```
* If TCS not tracking and no RPOP or Auto Seed *
*   Update disabled,                           *
*     TCS C&DI                                 *
*     > Commands > Acquire                     *
*     Update Range estimate and zero AZ & EL   *
*     > Send                                   *
```

2. <u>ENABLE RPOP TCS NAV</u>
Perform RPOP OPS, step 7, 7-10

3. <u>ENABLE AUTO ACQUISITION</u>
√Data – Good (and active tracking data)
TCS C&DI
> Config > Automatic
If Seed Update – (no √)
> Seed Update
√Maximum Range (ft): 5000
>OK
> Config > Automatic
If Acquisition – (no √)
> Acquisition
√Maximum Range (ft): 5000
> OK
> Config > Automatic
√Initialization – (√)
√Seed Update – (√)
√Acquisition – (√)

TCS DEACTIVATION

1. SHUTDOWN TCS

PGSC TCS C&DI
> Macros > SHUTDOWN

```
* If error msg received during SHUTDOWN, *
*   √MCC                                 *
```

TCS OPS
√Shutter: Closed (takes ~22 sec)

```
* If shutter fails to close:            *
*      > Commands > Close shutter       *
```

If Final TCS deactivation for mission:

2. SECURE Z AXIS

PGSC TCS C&DI

> Commands > Lock Z Axis Latch

TCS OPS
√Z Latch: Locked

```
* If Z Latch fails to lock:              *
*      If Z Latch: Transit               *
*           TCS C&DI                     *
*           > Commands > Lock Z Axis     *
*             Latch                      *
*      Otherwise                         *
*          √MCC                          *
```

3. POWERDOWN TCS

L12 TCS PWR – OFF (tb-bp)

```
* If tb – gray, cycle sw  *
* If no joy, notify MCC   *
```

4. SHUTDOWN CADS

PGSC TCS C&DI
> File > Exit TCS CAD

TCS LIMITS

TEMPERATURE (degC)	LOW ALERT	HIGH	
		ALERT	AUTOSAFE
CW Laser	-40.0	45.0	50.0
APD	-40.0	65.0	70.0
CPU	-40.0	80.0	85.0
DC Power	-40.0	80.0	85.0
Galvos	-40.0	80.0	85.0

VOLTAGES	LOW ALERT	HIGH ALERT
5V	4.75	5.25
5.5V	5.00	6.00
12V	11.00	12.75
15V	14.25	15.50

TRAD FAIL RANGE AND RANGE RATE DETERMINATION

1. Maintain a prime and a backup range and rdot estimate
2. Prime and backup range and rdot estimates shall have independent sensor sources
3. Maintain prime and backup RPOP PGSCs
4. Refer to tables below for the recommended prime and backup source/configuration for NOMINAL OPS, RADAR FAIL, TCS FAIL, HHL FAIL, PCMMU/WINDECOM FAIL, and PGSC FAIL (No RPOP, No TCS) scenarios

NOMINAL OPS

Phase	**Prime Source**: Configuration	**Backup Source**: Configuration
1. **Manual Takeover thru TCS lock-on** (R > 3000 ft assumed for TCS nominal lock-on*)	**State data**: SV	**Rdot window**: HHL/Dt NOTE: Configure HHL angle source to Dock Cam and lock angles to 0
2. TCS lock-on thru 15 ft	**State data**: TCS NAV	**Rdot window**: HHL/Dt NOTE: Configure HHL angle source to Dock Cam and lock angles to 0
3. 15 ft thru dock	**Raw data**: TCS Raw	**Rdot Window**: Range Ruler (F12)

*If no joy on TCS lock-on by 1200 ft, start subtended angle operations so that subtended angle estimates can back up the HHL/Dt inside of 1000 ft

RADAR FAIL

Phase	**Prime Source**: Configuration	**Backup Source**: Configuration
1. Manual Takeover thru TCS lock-on* NOTE: RPOP State data: (HHL/SV) can be suspect	**Rdot window**: HHL/Dt NOTE: Configure HHL angle source to Dock Cam and lock angles to 0	**Rdot window**: Subtended angles
2. TCS lock-on thru 15 ft	**State data**: TCS NAV	**Rdot window**: HHL Dt NOTE: Configure HHL angle source to Dock Cam and lock angles to 0
3. 15 ft thru dock	**Raw data: TCS Raw**	**Rdot Window: Range Ruler (F12)**

*Start Subtended angle ops after the radar fail correction if no joy on TCS lock-on

TCS FAIL

Phase	**Prime Source**: Configuration	**Backup Source**: Configuration
1. Manual Takeover thru ~1200 ft NOTE: Transition from phase 1 to phase 2 should be gradual. Start transition at ~1500 ft and complete it prior to 1000 ft braking gate	**State data**: SV	**Rdot window**: HHL/Dt NOTE: Configure HHL angle source to Dock Cam and lock angles to 0 **Rdot window**: HHL/ Dt
2. ~1200 ft thru 15 ft NOTE: Spec 33: FLTR, and State data: HHL can be suspect	**Rdot window**: HHL Dt NOTE: Configure HHL angle source to Dock Cam and lock angles to 0	**Rdot window**: Subtended angles **Spec 33**: Raw Radar*
3. 15 ft thru dock	**Rdot Window: Range Ruler (F12)**	**Rdot window: HHL/Dt****

*Radar data will be unusable at close ranges. The range at which the data becomes unusable is dependent on the target size, geometry, and physical characteristics, but can not be accurately predicted. For ISS the RR can become too noisy to use at ranges as great as 1000 ft

**HHL will not work if the aimpoint surface is closer than 12 feet (5 ft DP-DP)

HHL FAIL

Phase	**Prime Source**: Configuration	**Backup Source**: Configuration
1. Manual Takeover thru TCS lock-on	**State data**: SV	**Rdot window**: Subtended Angle
2. TCS lock-on thru 15 ft	**State data**: TCS NAV	**Spec 33**: Raw RR* **Rdot window**: Subtended Angle
3. 15 ft thru dock	**Raw data: TCS Raw**	**Rdot Window: Range Ruler (F12)**

*Radar data will be unusable at close ranges. The range at which the data becomes unusable is dependent on the target size, geometry, and physical characteristics, but cannot be accurately predicted. For ISS the RR can become too noisy to use at ranges as great as 1000 ft

PCMMU/WINDECOM FAIL

Phase	**Prime Source**: Configuration	**Backup Source**: Configuration
1. Manual Takeover thru ~1200 ft NOTE: Transition from phase 1 to 2 should be gradual. Start transition at ~1500 ft and complete it prior to 1000 ft braking gate NOTE: RPOP state data is bad	**Spec 33**: FLTR	**Rdot window**: HHL/Dt NOTE: RPOP prompts user for Orb attitude after 1st HHL mark. Enter P/Y/R= (90/0/0)* and check "Do not prompt for attitude" **TCS CADS**: Raw TCS (pulse active) NOTE: Range data good, rdot can be quite noisy NOTE: Resize and reposition the RPOP window so that the TCS mode (pulse/CW) is visible
2. ~1200 ft thru TCS CW lock-on(~800 ft) NOTE: RPOP State data is bad	**Rdot window**: HHL/Dt NOTE: RPOP uses the last two marks with Dt > 30 sec to calculate the Rdot estimate	**TCS CADS**: Raw TCS (pulse active) NOTE: Range data good, rdot can be quite noisy **Rdot window**: Generic NOTE: Manually enter raw TCS range marks. RPOP uses the last two marks with Dt > 30 sec to calculate the Rdot estimate
3. TCS CW lock-on (~800 ft) thru Vbar arrival NOTE: RPOP State data is bad	**TCS CADS**: Raw TCS (cw active)	**Rdot window**: HHL/Dt
4. Vbar arrival thru 15 ft	**TCS CADS**: Raw TCS (cw active) and/or **State Data**: TCS AUTO NOTE: Check Orb Att = (90/0/0), and set TCS frequency to 30 sec[CNTRL F10]	**Rdot window**: HHL/Dt
5. 15 ft thru dock	**TCS CADS**: TCS Raw (cw active)	**Rdot window**: Range Ruler(F12)

*Orbiter attitude displayed on RPOP will not be correct until maneuver to Vbar attitude is complete. Until Vbar arrival, do not use the RPOP trajectory data other than the data in the Rdot Window

PGSC FAIL (NO RPOP, NO TCS)

Phase	**Prime Source**: Configuration	**Backup Source**: Configuration
1. Manual Takeover thru ~1200 ft (noisy RR angles)	**Spec 33**: SV, Raw RR	For range – **HHL (back of unit)**: Raw HHL For Rdot – **Rdot vs. ΔRng/Δt Cue Card**: Record Raw HHL range and times on cue card
2. ~1200 ft thru 15 ft	For Range: **HHL (back of unit)**: Raw HHL(short pulls) For Rdot: **HHL (back of unit)**: Raw HHL(long pulls)	For range – **Subtended Angle table(6-13)**: COAS or Centerline Cam subtended angle For Rdot – **Rdot vs. ΔRng/Δt Cue Card**: Record subtended angle range and times on cue card
3. 15 ft thru dock	For Range: **Range Ruler Overlay**: Camera A/D For Rdot: **HHL (back of unit)**: Raw HHL* (long trigger pulls) **Rdot table on Range Ruler Overlay**: Dt between 1 ft DRange	

*HHL will not work if the aimpoint surface is closer than 12 feet (5 ft DP-DP)

This Page Intentionally Blank

APDS

This Page Intentionally Blank

APDS NOMINAL

DOCKING MECHANISM INITIALIZATION 8-4
POWERUP 8-5
POWERDOWN 8-6
PREP 8-7
UNDOCKING PREP 8-7
DOCKING RING EXTENSION 8-8
RETRACTION (NOT MATED) 8-9
AIRLOCK FAN ACT AND ODS VOLUME PREP 8-10
POST DOCKING HATCH LEAK CHECK 8-11
AIRLOCK PREP FOR INGRESS – BYPASS CONFIG 8-12

DOCKING MECHANISM INITIALIZATION

A6L 1. cb ESS 1BC SYS PWR CNTL SYS 1 – cl
2CA SYS PWR CNTL SYS 2 – cl
1BC DEP SYS 1 VENT ISOL – cl
2CA DEP SYS 2 VENT ISOL – cl
MN A DEP SYS 1 VENT – cl
B DEP SYS 2 VENT – cl
MN A,MN B DOCK LT (four) – cl
MN A,MN B,MN C LOGIC (six) – cl
√PMA 2/3 GRP 1,GRP 2 HOOKS (eight) – op
√SYS PWR MN A,MN B (two) – ctr
√SYS 1,SYS 2 tb (two) – OFF
√PYRO PWR MN A,MN C (two) – OFF
√PMA 2/3 HOOKS SYS A,SYS B (two) – ctr
√GRP 1,2 tb (two) – bp
√PSU PWR MN A,MN B (two) – OFF
√LT TRUSS,VEST (four) – OFF

A7L 2. √CONTROL PANEL POWER A,B,C (three) – OFF
√HEATERS/DCU POWER (three) – OFF
√APDS POWER A_{DS},B_{DS},C_{DS} (three) – OFF
√A_{DS},B_{DS},C_{DS} lt (three) – lt off
√STATUS lt (eighteen) – lt off
√PYROS A_P,B_P,C_P (three) – OFF
√A_P,B_P,C_P lt (three) – lt off
√PYRO CIRCUIT PROTECT OFF lt – lt off

A6L 3. SYS PWR MN A,MN B (two) – ON (hold 5 sec)
√SYS 1,SYS 2 tb (two) – ON
√VEST DEP VLV SYS 1,SYS 2 VENT (two) – ctr (tb-CL)
√ISOL (two) – ctr (tb-CL)
cb ESS 1BC DEP SYS 1 VENT ISOL – op
2CA DEP SYS 2 VENT ISOL – op
MN A DEP SYS 1 VENT – op
B DEP SYS 2 VENT – op
√VEST DEP VLV SYS 1,SYS 2 VENT tb (two) – bp
√ISOL tb (two) – bp
ML86B:C cb MNA EXT ARLK HTR VEST Z1/2/3 – cl

APDS NOMINAL

DOCKING MECHANISM POWERUP

SM 167 DOCKING STATUS

A6L 1. √SYS PWR SYS 1,SYS 2 tb (two) – ON
PSU PWR MN A,MN B (two) – ON
If in Undocking timeline and ODS VEST/PMA HATCH LEAK CHECK complete:
√VEST DEP VLV SYS 1(SYS 2) VENT – ctr (tb-OP)

A7L 2. HEATERS/DCU POWER (three) – ON
CRT √HTR/DCU PWR – A/B/C
√RNG DR BUS – 1/2
√HKS DR BUS – 1/2
√DAMPER BUS – 1/2
√FIXER BUS – 1/2

A7L 3. CONTROL PANEL POWER A,B,C (three) – ON
CRT √CNTL PNL PWR – A/B/C

A7L 4. APDS POWER A_{DS},B_{DS},C_{DS} (three) – ON
√A_{DS},B_{DS},C_{DS} lt (three) – lt on
CRT √PWR – A/B/C

A7L 5. LAMP TEST pb – push
√STATUS lt (eighteen) – lt on
√PYRO CIRCUIT PROTECT OFF lt – lt on

CRT,A7L * If CNTL PNL PWR A(C) tlm blank, and STATUS lts nominal, *
* tlm failure only >> *
CRT * If CNTL PNL PWR B tlm blank: *
A7L * CONTROL PANEL POWER A(C) – OFF *
* POWER ON pb – push (√ and report STATUS lts to MCC) *
* If any STATUS lt on, tlm failure only *
* CONTROL PANEL POWER A(C) – ON *

DOCKING MECHANISM POWERDOWN

SM 167 DOCKING STATUS

A7L 1. √STATUS lt (eighteen) – lt off

2. APDS POWER A_{DS},B_{DS},C_{DS} (three) – OFF
√A_{DS},B_{DS},C_{DS} lt (three) – lt off

CRT √PWR (three) – blank

A7L 3. CONTROL PANEL POWER A,B,C (three) – OFF

CRT √CNTL PNL PWR A,B,C (three) – blank

A7L 4. HEATERS/DCU POWER (three) – OFF

CRT √HTR/DCU PWR (three) – blank

A6L 5. PSU PWR MN A,MN B (two) – OFF

6. If post-undocking:
VEST DEP VLV SYS 1(SYS 2) VENT – CL (tb-CL)
ISOL – CL (tb-CL)
cb MNA DEP SYS 1 VENT – op
√MNB DEP SYS 2 VENT – op
ESS 1BC DEP SYS 1 VENT ISOL – op
√2CA DEP SYS 2 VENT ISOL – op

ML86B:C MNA EXT ARLK HTR VEST Z1/2/3 – op

DOCKING PREP

SM 167 DOCKING STATUS

A6L 1. LTS TRUSS AFT,FWD (two) – ON
VEST PORT,STBD (two) – ON (if reqd)

A7L 2. POWER ON pb – push
√ON lt – lt on
√RING ALIGNED lt – lt on
√INITIAL POSITION lt – lt on
√HOOKS 1,HOOKS 2 OPEN lt (two) – lt on
√LATCHES CLOSED lt – lt on
CRT √CLUTCH – blank/SLIP

UNDOCKING PREP

A6L 1. LTS TRUSS FWD,AFT (two) – ON (as reqd)
VEST PORT,STBD (two) – ON (if reqd)

A7L 2. POWER ON pb – push
√ON lt – lt on
√RING ALIGNED lt – lt on
√READY TO HOOK lt – lt on
√INTERF SEALED lt – lt on
√HOOKS 1,HOOKS 2 CLOSED lt (two) – lt on
√LATCHES OPEN lt – lt on
√RING FINAL POSITION lt – lt on

DOCKING RING EXTENSION

```
                    SM 167 DOCKING STATUS
A7L       1.  POWER ON pb – push
                     √ON lt – lt on
            √RING ALIGNED lt – lt on
            √HOOKS 1,HOOKS 2 OPEN lt (two) – lt on
            √LATCHES CLOSED lt – lt on
            √RING FINAL POSITION lt – lt on
CRT         √CLUTCH – LOCK/blank

A7L       2.  APDS CIRC PROT OFF pb – push
                  √CIRCUIT PROTECT OFF lt – lt on

0:00      3.  RING OUT pb – push
0:10              √FINAL POSITION lt – lt off
CRT               √DRV CMD – ON
                  √FIXERS – ON
            √PETAL POS BASE (three) – incr

A7L           *  If RING INITIAL POSITION lt failed on (ring stops after 1 sec,*
CRT           *    and CLUTCH – blank/SLIP):                                  *
A7L           *      FIXER OFF pb – push                                      *
              *     √FIXERS OFF lt – lt on                                    *
              *      RING OUT pb – push                                       *
CRT           *      When PETAL POS BASE (three) = 76 ± 3%:                   *
A7L           *          POWER OFF pb – push                                  *
              *                   ON pb – push                                *
              *         √FIXERS OFF lt – lt off                               *
              *          APDS CIRC PROT OFF pb – push                         *
              *                √CIRCUIT PROTECT OFF lt – lt on                *
              *          RING OUT pb – push                                   *
              *          After 1 sec:                                         *
CRT           *            √RING DRV CMD – OFF                                *
              *                                                               *
              *  If RING FORWARD POSITION lt failed on (ring stops after      *
              *    10 sec):                                                   *
A7L           *      RING OUT pb – push                                       *
              *      Within 10 sec:                                           *
              *          APDS POWER A_DS,B_DS,C_DS (three) – OFF              *
              *      APDS POWER A_DS,B_DS,C_DS (three) – ON                   *
              *              CIRC PROT OFF pb – push                          *
              *             √CIRCUIT PROTECT OFF lt – lt on                   *
              *      When RING INITIAL POSITION lt – lt on:                   *
              *          RING OUT pb – push                                   *
```

Cont next page

```
3:40    A7L     4. √RING INITIAL POSITION lt – lt on
        CRT        √PETAL POS BASE (three):  76 ± 3%
3:50               √CLUTCH – blank/SLIP

                      * If CLUTCH – blank/blank:                          *
        A7L           *    √APDS CIRCUIT PROTECT OFF lt – lt on           *
                      *      RING OUT pb – push (expect 1 sec of drive), wait *
                      *        10 sec                                     *
        CRT           *    √RING DRV CMD – OFF                            *
                      *                                                   *
                      * If CLUTCH – LOCK/blank:                           *
        A7L           *    √RING INITIAL POSITION lt – lt on              *
                      *    √FIXERS OFF lt – lt off                        *
                      *    √APDS CIRCUIT PROTECT OFF lt – lt on           *
                      *      RING OUT pb – push (expect 1 sec of drive), wait *
                      *        10 sec                                     *
        CRT           *    √RING DRV CMD – OFF                            *
                      *                                                   *
                      * If not CLUTCH – blank/SLIP:                       *
                      *    √MCC                                           *

        A7L     5.  POWER OFF pb – push
                   √STATUS lt (eighteen) – lt off
```

DOCKING RING RETRACTION (NOT MATED)

```
                   SM 167 DOCKING STATUS
        A7L     1.  POWER ON pb – push
                          √ON lt – lt on
                   √RING ALIGNED lt – lt on
                          √INITIAL POSITION lt – lt on
                   √HOOKS 1,HOOKS 2 OPEN lt (two) – lt on
                   √LATCHES CLOSED lt – lt on
        CRT        √CLUTCH – blank/SLIP

0:00    A7L     2.  RING IN pb – push
                          √INITIAL POSITION lt – lt off
        CRT        √CLUTCH – LOCK/blank

        A7L           * If RING FINAL POSITION lt failed on (ring stops after *
                      *  10 sec):                                         *
                      *      RING IN pb – push                            *
3:40    CRT           *      When PETAL POS BASE = 5 ± 3% and not decr:   *
                      *          Wait 10 sec, then:                       *
        A7L           *              POWER OFF pb – push                  *
                      *            √STATUS lt (eighteen) – lt off >>      *

3:40    A7L     3. √RING FINAL POSITION lt – lt on
3:50    CRT           √DRV CMD – OFF

        A7L     4.  POWER OFF pb – push
                   √STATUS lt (eighteen) – lt off
```

AIRLOCK FAN ACT AND ODS VOLUME PREP

MIDDK 1. Disconnect bypass duct from middeck floor fitting. Remove cap from Airlock Fan outlet and temp stow. Unstow, install diffuser on middeck floor fitting

TNL EXT 2. Attach bypass duct to Airlock Fan outlet

MA73C:G 3. √cb AC1,2 ARLK TNL FAN A,B (six) – cl

MO13Q 4. AIRLK FAN A(B) – ON

EXT A/L 5. √Airflow at top of external airlock halo and muffler

If in Approach CC perform the following:

6. Unstrap centerline camera diffuser flex duct from EXT A/L wall
   Attach flex duct to camera bracket to direct air flow to window
   If required, tape diffuser open

AW18A 7. LTG FLOOD 1(3,4) – OFF

MO13Q 8. AIRLK 2 – OFF/ON

MIDDK 9. Close Inner Hatch:
   Position handle to preclosing posn per decal
   Hatch – rotate about hinge and push
   Handle – CCW to LATCH
   Lock lever to LOCKED

10. Equal vlv (two) – OFF, install caps

MO10W 11. √14.7 CAB REG INLET SYS 1, SYS 2 (two) vlv – CL

POST DOCKING HATCH LEAK CHECK

NOTE

ISS will concurrently perform a leak check of the PMA2 volume

1. Notify **MCC** and ISS, "Beginning initial Hatch leak checks"

MO10W 2. √14.7 CAB REG INLET SYS 1,SYS 2 (two) vlv – CL

SM 177 EXTERNAL AIRLOCK

3. Record EXT A/L PRESS: _____ psia
   Record A/L-VEST ΔP: _____ psid

4. Wait 20 min

```
*  If EXT A/L Press ≤ previously recorded – 0.16 psia      *
*       Notify MCC-H (possible leakage from EXT A/L)       *
*                                                          *
*  If A/L-VEST ΔP ≤ previously recorded – 0.16 psid        *
*       Notify MCC-H (possible leakage through Hatches)    *
```

5. Notify **MCC** and ISS: "Initial hatch leak checks complete. Ready for vestibule pressurization"

AIRLOCK PREP FOR INGRESS – BYPASS CONFIG

Inner Hatch	1.	Equal vlv caps (two) – remove
	2.	Equal vlv (two) – NORM
	3.	√Hatch ΔP < 0.2 psid
	4.	Open Hatch per decal
	5.	Equal vlv (two) – OFF, reinstall caps
	6.	AIRLK 2 – ON/OFF
	7.	ARLK FAN A(B) – OFF
TNL EXT MIDDK	8.	Disconnect bypass duct from Airlock Fan outlet Remove diffuser from middeck floor fitting and temp stow Connect bypass duct to middeck floor fitting. Unstow, install cap on Airlock Fan outlet
AW18A	9.	As required, LTG FLOOD 1(3,4) – ON
EXT A/L	10.	Unstrap centerline camera diffuser flex duct from camera bracket Stow duct along Stbd top of EXT A/L wall (in straps)
	11.	√Airflow at top of external airlock halo
R12	12.	Go to P/TV02 DOCK, DEACTIVATION, step 2 (PHOTO/TV, <u>SCENES</u>)

APDS OFF-NOMINAL

POWER FAILED OFF (STATUS LTS OFF) 8-14
DAMPING FAILED ON 8-15
CAPTURE LT FAILED ON 8-15
FIXERS FAILED ON 8-16
OFF LT FAILED ON 8-18
OFF 8-18
RING FAILS TO DRIVE 8-19
DRV CMD OFF 8-19
FINAL POSITION LT FAILED ON 8-20
FORCE RING ALIGNMENT 8-20
CLUTCH NOT 'LOCK' 8-21
APDS CIRCUIT PROTECT OFF LT FAILED OFF 8-21
HOOKS 1(2) OPEN LT FAILED ON 8-21
NOT CLOSED WITHIN SINGLE MTR TIME 8-22
READY TO HOOK LT FAILED ON 8-23
HOOKS 1(2) CLOSED LT FAILED ON 8-23
LATCHES OPEN LT FAILED OFF 8-24
APDS POWER FAILED OFF 8-24
DOCKING MECHANISM DEMATE/REMATE 8-25
ODS HOOKS OPEN – CONTINGENCY 8-27
PMA 2/3 HOOKS OPEN – CONTINGENCY 8-30
APDS FAILED CAPTURE RECONFIG 8-33
PMA 2/3 HOOKS CLOSE 8-35
OPEN 8-37

POWER FAILED OFF (STATUS LTS OFF)

> CAUTION
> Pre-Contact, if all STATUS lts off, **NO-GO** for docking until power recovered. Initiate VBAR CORRIDOR BACKOUT (CONTINGENCY OPS) while attempting power recovery steps

A7L

1. CONTROL PANEL POWER A – OFF
   POWER ON pb – push
   If expected STATUS lts on:
   Continue in DOCKING SEQUENCE (Cue Card), as reqd >>

2. CONTROL PANEL POWER A – ON
   APDS POWER A_{DS} – OFF
   POWER ON pb – push
   If expected STATUS lts on:
   If Undocking:
   Continue in UNDOCKING OPERATIONS, as reqd >>
   If Docking:
   Continue in DOCKING SEQUENCE (Cue Card) through step 16, then:
   Go to POWER FAILED OFF (STATUS LTS OFF), step 4

3. APDS POWER A_{DS} – ON
   B_{DS} – OFF
   POWER ON pb – push
   If STATUS lt (eighteen) – lt off:
   √MCC >>
   If expected STATUS lts on:
   If Undocking:
   Continue in UNDOCKING OPERATIONS, as reqd >>
   If Docking:
   Continue in DOCKING SEQUENCE (Cue Card) through step 16, then:
   Go to POWER FAILED OFF (STATUS LTS OFF), step 4

4. APDS CIRC PROT OFF pb – push
   √CIRCUIT PROTECT OFF lt – lt on
   OPEN LATCHES pb – push
   √LATCHES CLOSED lt – lt off
   APDS POWER C_{DS} – OFF
   A_{DS},B_{DS} (two) – ON
   POWER ON pb – push
   If STATUS lt (eighteen) – lt off:
   APDS POWER B_{DS} – OFF
   C_{DS} – ON
   POWER ON pb – push
   APDS CIRC PROT OFF pb – push
   √CIRCUIT PROTECT OFF lt – lt on
   Go to DOCKING SEQUENCE (Cue Card), step 17

DAMPING FAILED ON

> CAUTION
> Pre-Contact, **NO-GO** for docking if DAMPING – ON.
> Initiate VBAR CORRIDOR BACKOUT
> (CONTINGENCY OPS) while attempting to power
> off dampers

SM 167 DOCKING STATUS

A6L 1. PSU PWR MN A,MN B (two) – OFF
CRT If DAMPING – ON (TLM failure only):
A6L PSU PWR MN A,MN B (two) – ON
Continue approach or DOCKING SEQUENCE (Cue Card), as reqd >>

2. PSU PWR MN A – ON
CRT If DAMPING – ON:
A6L PSU PWR MN A – OFF
MN B – ON
CRT If DAMPING – OFF:
Pre-Contact:
Continue Approach
Post-Capture, wait 5 sec then:
A6L PSU PWR MN A (MN B) – ON
Continue in DOCKING SEQUENCE (Cue Card), with the following change:
After step 3:
PSU PWR MN A (MN B) – OFF >>

3. PSU PWR MN A,MN B (two) – OFF
Pre-Contact:
Continue Approach
Post-Capture, wait 5 sec then:
PSU PWR MN A,MN B (two) – ON
Continue in DOCKING SEQUENCE (Cue Card), starting in step 8

CAPTURE LT FAILED ON

> CAUTION
> Pre-Contact, **NO-GO** for docking if DAMPING – ON.
> Initiate VBAR CORRIDOR BACKOUT
> (CONTINGENCY OPS) while attempting to power
> off dampers

SM 167 DOCKING STATUS

If Pre-Contact:
CRT If DAMPING – OFF:
Continue Approach >>
If DAMPING – ON:
A6L PSU PWR MN A,MN B (two) – OFF
Continue Approach
Post-Capture (no physical separation):
PSU PWR MN A,MN B (two) – ON
Continue in DOCKING SEQUENCE (Cue Card), as reqd

FIXERS FAILED ON

CAUTION
Pre-Contact, **NO-GO** for docking if RING FIXERS – ON. Initiate VBAR CORRIDOR BACKOUT (CONTINGENCY OPS) while attempting to power off fixers

SM 167 DOCKING STATUS

A7L 1. POWER OFF pb – push
CRT If RING FIXERS – ON:
A7L POWER ON pb – push
Continue Approach or DOCKING SEQUENCE (Cue Card), as reqd >>

2. POWER ON pb – push
APDS POWER A_{DS} – OFF
CRT If RING FIXERS – ON:
A7L APDS POWER A_{DS} – ON
B_{DS} – OFF
CRT If RING FIXERS – OFF:
Pre-Contact:
Continue Approach
Post-Capture, continue in DOCKING SEQUENCE (Cue Card), as reqd, with the following change:
After DOCKING SEQUENCE (Cue Card), step 16:
A7L APDS POWER A_{DS} (B_{DS}) – ON >>

3. APDS POWER B_{DS} – ON
A6L PSU PWR MN A,MN B (two) – OFF
If post-contact:
√MCC for subsequent steps
Continue Approach
Post-capture wait 7 seconds, then:
A7L APDS POWER A_{DS},B_{DS},C_{DS} (three) – OFF
A6L PSU PWR MN A,MN B (two) – ON
CRT √DAMPING – ON

DISABLE DAMPING

4. When no relative motion [PETAL POS BASE (three) not changing for 60 sec]:
A6L PSU PWR MN A,MN B (two) – OFF
A7L APDS POWER A_{DS},B_{DS},C_{DS} (three) – ON
POWER ON pb – push

Cont next page

COMMAND CLUTCH TO LOCK

CRT 5. When no relative motion [PETAL POS BASE (three) not changing for 30 sec]:
If PETAL POS BASE (three) not within 5% of each other:
√MCC
A7L RING IN pb – push
POWER ON pb – push
A6L PSU PWR MN A,MN B (two) – ON
CRT √DAMPING – OFF
√CLUTCH – LOCK/blank
A6L PSU PWR MN A,MN B (two) – OFF

RETRACT RING

A7L 6. RING IN pb – push
APDS POWER A_{DS},B_{DS},C_{DS} (three) – OFF
0:00 A6L PSU PWR MN A,MN B (two) – ON
CRT √RING DRV CMD – ON [PETAL POS BASE (three) – decr]
0:05 A6L PSU PWR MN A,MN B (two) – OFF
A7L APDS POWER A_{DS},B_{DS},C_{DS} (three) – ON
POWER ON pb – push

EXTEND RING

CRT 7. When no relative motion [PETAL POS BASE (three) not changing for 30 sec]:
A7L APDS CIRC PROT OFF pb – push
√CIRCUIT PROTECT OFF lt – lt on
RING OUT pb – push
APDS POWER A_{DS},B_{DS},C_{DS} (three) – OFF
0:00 A6L PSU PWR MN A,MN B (two) – ON
CRT √RING DRV CMD – ON [PETAL POS BASE (three) – incr]
0:05 A6L PSU PWR MN A,MN B (two) – OFF
A7L APDS POWER A_{DS},B_{DS},C_{DS} (three) – ON
POWER ON pb – push

8. If RING ALIGNED lt – lt off:
√MCC
A6L PSU PWR MN A,MN B (two) – ON
Go to DOCKING SEQUENCE (Cue Card), step 8

FIXERS OFF LT FAILED ON

SM 167 DOCKING STATUS

If performing DOCKING RING EXTENSION, 8-8:

CRT 1. If RING FIXERS – ON during ring drive:
Continue in DOCKING RING EXTENSION, 8-8 >>

A7L 2. FIXER OFF pb – push
POWER OFF pb – push
ON pb – push
If FIXERS OFF lt – lt off:
Continue in DOCKING RING EXTENSION, 8-8 >>

3. APDS CIRC PROT OFF pb – push
√CIRCUIT PROTECT OFF lt – lt on
RING OUT pb – push
CRT When PETAL POS BASE (three) = 76 ± 3%:
A7L POWER OFF pb – push
Go to APDS DIRECT DRIVE USING BOB (IFM, PROCEDURES A THRU F) to drive slip clutch to SLIP

FIXERS OFF LT FAILED OFF

SM 167 DOCKING STATUS

A7L 1. POWER OFF pb – push
ON pb – push
FIXER OFF pb – push
If FIXERS OFF lt – lt on:
Continue in DOCKING SEQUENCE (Cue Card), as reqd >>

CRT 2. If not CLUTCH – LOCK/blank
A6L PSU PWR MN A,MN B (two) – OFF
A7L RING IN pb – push
POWER ON pb – push
A6L 0:00 PSU PWR MN A,MN B (two) – ON
CRT 0:05 √CLUTCH – LOCK/blank

A6L 3. PSU PWR MN A,MN B (two) – OFF
A7L RING IN pb – push
APDS POWER A_{DS},B_{DS},C_{DS} (three) – OFF
– ON
A6L 0:00 PSU PWR MN A,MN B (two) – ON (ring will begin to drive in this step)
CRT √PETAL POS BASE (three) – decr
A7L 0:05 POWER ON pb – push
CRT √RING DRV CMD – OFF

A6L 4. PSU PWR MN A,MN B (two) – OFF
APDS CIRC PROT OFF pb – push
√CIRCUIT PROTECT OFF lt – lt on
A7L RING OUT pb – push
APDS POWER A_{DS},B_{DS},C_{DS} (three) – OFF
– ON
A6L 0:00 PSU PWR MN A,MN B (two) – ON (ring will begin to drive in this step)
CRT √PETAL POS BASE (three) – incr
A7L 0:05 POWER ON pb – push
CRT √RING DRV CMD – OFF

5. Go to DOCKING SEQUENCE (Cue Card), step 8

RING FAILS TO DRIVE

```
                SM 167 DOCKING STATUS
A7L       1.  POWER ON pb – push
              APDS CIRC PROT OFF pb – push
                  √CIRCUIT PROTECT OFF lt – lt on
              FIXER OFF pb – push
             √FIXERS OFF lt – lt on

          2.  RING OUT pb – push
CRT           If PETAL POS BASE (three) incr:
A7L           │  POWER ON pb – push
              │ √MCC

CRT       3.  If PETAL POS BASE (three) not incr:
                If RING DRV CMD – ON:
                │  If not CLUTCH – LOCK/blank:
A7L             │     POWER OFF pb – push
                │                ON pb – push
                │     Go to CLUTCH NOT 'LOCK'  >>
CRT             If RING DRV CMD – OFF:
                   Go to RING DRV CMD OFF
```

RING DRV CMD OFF

```
                SM 167 DOCKING STATUS
A7L       1.  POWER OFF pb – push
                         ON pb – push
              If STATUS lt (eighteen) – lt off:
                 CONTROL PANEL POWER A – OFF
                 POWER ON pb – push
                 If STATUS lt (eighteen) – lt off:
                    Go to step 3
                 Continue in DOCKING SEQUENCE (Cue Card), as reqd  >>

          2.  APDS POWER A_DS – OFF
              RING IN pb – push

CRT           If RING DRV CMD – OFF:
A7L              APDS POWER A_DS – ON
                            C_DS – OFF
                 RING IN pb – push
CRT              If RING DRV CMD – OFF:
                    Go to step 3

A7L           POWER ON pb – push
              Continue in DOCKING SEQUENCE (Cue Card) through step 16, then:
                 APDS POWER A_DS (C_DS) – ON
                 OPEN LATCHES pb – push
                 After 5 sec:
                    √LATCHES OPEN lt – lt on
                    APDS POWER A_DS (C_DS) – OFF
                    Go to DOCKING SEQUENCE (Cue Card), step 18  >>

          3.  If free drift, comm, and power level constraints permit (√MCC):
                 Go to APDS DIRECT DRIVE USING BOB (IFM, PROCEDURES A THRU F)
                  to complete docking  >>

          4.  Go to FAILED CAPTURE (VBAR APPROACH, Cue Card) to undock
```

RING FINAL POSITION LT FAILED ON

SM 167 DOCKING STATUS

Continue in DOCKING SEQUENCE (Cue Card), as reqd, with the following changes:

In step 8, after the ring stops (10 sec after having previously pushed the RING IN pb):

A7L RING IN pb – push

In step 11, to stop ring drive

POWER ON pb – push

CRT In step 18, when PETAL POS BASE (three) = 5 ± 3% and not changing for 10 sec:

A7L POWER OFF pb – push

FORCE RING ALIGNMENT

A7L 1. APDS CIRC PROT OFF pb – push
√CIRCUIT PROTECT OFF lt – lt on

2. FIXER OFF pb – push
√FIXERS OFF lt – lt on

0:00 3. RING OUT pb – push
CRT √DRV CMD – ON [PETAL POS BASE (three) – incr]
√FIXERS – OFF
0:05 √CLUTCH – LOCK/blank
A7L √RING INITIAL POSITION lt – lt on (√off at ~0:30)

```
*  If RING FORWARD POSITION lt failed on (ring stops after 10 sec):*
*      RING OUT pb – push                                          *
*      Within 10 sec:                                              *
*          APDS POWER A_DS,B_DS,C_DS (three) – OFF                 *
*      APDS POWER A_DS,B_DS,C_DS (three) – ON                      *
*              CIRC PROT OFF pb – push                             *
*            √CIRCUIT PROTECT OFF lt – lt on                       *
CRT *  When PETAL POS BASE (any) = 92%:                            *
A6L *      PSU PWR MN A,MN B (two) – OFF                           *
CRT *  When PETAL POS BASE (three) not changing for 30 sec:        *
A6L *      PSU PWR MN A,MN B (two) – ON                            *
CRT *  When PETAL POS BASE (three) = 98%:                          *
A7L *      RING OUT pb – push                                      *
    *  Go to step 7                                                *
```

CRT 4. When PETAL POS BASE (any) = 92%:
A7L POWER ON pb – push

CRT 5. When PETAL POS BASE (three) not changing for 30 sec:
A7L RING OUT pb – push

0:00 6. √RING FORWARD POSITION lt – lt on [PETAL POS BASE (three) = 98%]

0:10 CRT 7. √RING DRV CMD – OFF
A7L √FIXERS OFF lt – lt off
√RING ALIGNED lt – lt on [PETAL POS RING (three) 50 ± 1%] and [PETAL POS BASE (three) within 1%]

8. Return to DOCKING SEQUENCE (Cue Card), step 8

CLUTCH NOT 'LOCK'

SM 167 DOCKING STATUS

CRT If no ring motion when RING DRV CMD – ON

A7L 1. APDS CIRC PROT OFF pb – push
√CIRCUIT PROTECT OFF lt – lt on
FIXER OFF pb – push
√FIXERS OFF lt – lt on
RING OUT pb – push
After 10 sec:
POWER OFF pb – push
ON pb – push

CRT If CLUTCH – LOCK/blank:
Continue in DOCKING SEQUENCE (Cue Card), as reqd >>

A7L 2. RING IN pb – push
After 10 sec:
POWER ON pb – push

CRT If CLUTCH – LOCK/blank:
Continue in DOCKING SEQUENCE (Cue Card), as reqd >>

3. If free drift, comm, and power level constraints permit (√MCC):
Go to APDS DIRECT DRIVE USING BOB (IFM, PROCEDURES A THRU F) to complete docking

APDS CIRCUIT PROTECT OFF LT FAILED OFF

SM 167 DOCKING STATUS

CRT If APDS CIRC PROT – ON:

A7L POWER OFF pb – push
ON pb – push
APDS CIRC PROT OFF pb – push

A7L If APDS CIRCUIT PROTECT OFF lt – lt on or

CRT APDS CIRC PROT – OFF:
Continue sequence as required >>

Go to APDS DIRECT DRIVE USING BOB (IFM, PROCEDURES A THRU F) for RING OUT, OPEN HOOKS, OPEN LATCHES, and UNDOCKING pb commands

HOOKS 1(2) OPEN LT FAILED ON

NOTE

The following procedure should be performed immediately after DOCKING SEQUENCE (Cue Card) completed or prior to undocking as applicable

A7L 1. POWER ON pb – push
APDS POWER A_{DS} – OFF
If HOOKS 1(2) OPEN lt – lt off:
Go to nominal UNDOCKING OPERATIONS per nominal mission timeline with APDS POWER A_{DS} – OFF >>

2. Prior to nominal undocking:
Go to APDS DIRECT DRIVE USING BOB (IFM, PROCEDURES A THRU F) to open affected hooks

HOOKS 1(2) NOT CLOSED WITHIN SINGLE MTR TIME

SM 167 DOCKING STATUS

CRT 1. If no hook motion when commanded:
A7L APDS POWER A_{DS} – OFF
CLOSE HOOKS pb – push
CRT If no hook motion after 10 sec:
A7L APDS POWER A_{DS} – ON
B_{DS} – OFF
CLOSE HOOKS pb – push
CRT If Hook Pos increasing after 10 sec:
Continue in DOCKING SEQUENCE (Cue Card) with the following change:
After step 16:
A7L APDS POWER A_{DS} (B_{DS}) – ON >>

2. APDS POWER A_{DS} (B_{DS}) – ON
POWER OFF pb – push
ON pb – push

3. If other hook gang closed:
Continue in DOCKING SEQUENCE (Cue Card), as reqd
After DOCKING SEQUENCE (Cue Card) complete, go to PMA 2/3 HOOKS CLOSE, 8-35, to secure interface with 12 hooks >>

4. If neither hook gang closed:
√MCC for IFM capability
Go to APDS DIRECT DRIVE USING BOB (IFM, PROCEDURES A THRU F) and PMA 2/3 HOOKS CLOSE, 8-35, as reqd, to secure interface with 12 hooks >>

5. If no IFM capability or time does not permit IFM:
APDS CIRC PROT OFF pb – push
√CIRCUIT PROTECT OFF lt – lt on
OPEN HOOKS pb – push
CRT √HK1,HK2 POS (two) – decr
A7L √HOOKS 1,HOOKS 2 OPEN lt (two) – lt on
0:00 RING OUT pb – push
CRT √PETAL POS BASE (three) – incr
3:40 A7L √RING INITIAL POSITION lt – lt on
Go to FAILED CAPTURE (VBAR APPROACH, Cue Card) to undock

READY TO HOOK LT FAILED ON

1. Immediately prior to step 4 in DOCKING SEQUENCE (Cue Card):

A7L APDS POWER A_{DS} – OFF
If READY TO HOOK lt – lt off:
If HOOKS 1(2) OPEN lt – lt off:
APDS CIRC PROT OFF pb – push
√CIRCUIT PROTECT OFF lt – lt on
OPEN HOOKS pb – push
√HOOKS 1,HOOKS 2 OPEN lt (two) – lt on
Continue in DOCKING SEQUENCE (Cue Card), as reqd, with the following change:
After hooks begin to drive closed in step 10:
APDS POWER A_{DS} – ON >>

2. APDS POWER A_{DS} – ON
Continue in DOCKING SEQUENCE (Cue Card), as reqd, with the following changes:
Immediately after RING IN pb – push in step 4:
APDS CIRC PROT OFF pb – push
√CIRCUIT PROTECT OFF lt – lt on
OPEN HOOKS pb – push
CRT √HK1(2) POS decreasing to 5%
Immediately after RING IN pb – push in step 8:
A7L APDS CIRC PROT OFF pb – push
√CIRCUIT PROTECT OFF lt – lt on
OPEN HOOKS pb – push
CRT √HK1(2) POS decreasing to 5%
When PETAL POS BASE (three) ≤ 7%:
A7L CLOSE HOOKS pb – push

HOOKS 1(2) CLOSED LT FAILED ON

A7L 1. APDS POWER A_{DS} – OFF

2. If HOOKS 1(2) CLOSED lt – lt off:
3. If Pre-Contact:
APDS POWER A_{DS} – ON
Continue Approach

4. Post-Capture, continue in DOCKING SEQUENCE (Cue Card). If affected hooks do not close in step 10:
APDS POWER A_{DS} – OFF
CLOSE HOOKS pb – push

5. Continue in DOCKING SEQUENCE (Cue Card) with the following change:
After step 13:
APDS POWER A_{DS} – ON >>

6. If HOOKS 1(2) CLOSED lt – lt on:
APDS POWER A_{DS} – ON
Continue in DOCKING SEQUENCE (Cue Card). If affected hooks do not close in step 10:
After DOCKING SEQUENCE (Cue Card) complete:
Go to APDS DIRECT DRIVE USING BOB (IFM, PROCEDURES A THRU F), to secure the interface with 12 hooks

LATCHES OPEN LT FAILED OFF

SM 167 DOCKING STATUS

CRT 1. If CAP LAT IND – OP/blank:
Continue in DOCKING SEQUENCE (Cue Card) >>

A7L 2. √APDS POWER A_{DS},B_{DS},C_{DS} (three) – ON
√A_{DS},B_{DS},C_{DS} lt (three) – lt on
CIRC PROT OFF pb – push
√CIRCUIT PROTECT OFF lt – lt on
OPEN LATCHES pb – push

A7L, CRT If LATCHES OPEN lt – lt on or CAP LAT IND – OP/blank:
Continue in DOCKING SEQUENCE (Cue Card) >>

3. Continue in DOCKING SEQUENCE (Cue Card), deleting step 18, then:
On MCC GO:
Go to 2.109 CAPTURE LATCH MANUAL RELEASE, HATCH OPENING AND DUCT INSTALL (JOINT OPS, INGRESS STATION)

APDS POWER FAILED OFF

SM 167 DOCKING STATUS

A7L If any APDS POWER A_{DS},B_{DS},C_{DS} lt off:

> CAUTION
> Associated capture latch cannot be driven open, resulting in inability to separate interfaces once the structural interfaces are within 3 inches of each other

Post-Capture:
Continue in DOCKING SEQUENCE (Cue Card), deleting steps 17 and 18

On MCC GO:
Go to 2.109 CAPTURE LATCH MANUAL RELEASE, HATCH OPENING AND DUCT INSTALL (JOINT OPS, INGRESS STATION)

NOTE

This procedure assumes vestibule leak check failed, or both ODS hook gangs jammed simultaneously. Docking ring will recapture PMA petals, hooks will be driven open, interface will be separated, and second mating attempt will be performed. Procedure assumes DOCKING SEQUENCE (Cue Card) completed.

Successful completion of this procedure ends with Shuttle resuming attitude control

1. Perform steps 1 and 2 of ANY ATTITUDE SEPARATION, (CONTINGENCY OPS), 5-23

SM 167 DOCKING STATUS

RECAPTURE PMA PETALS

A7L 2. POWER ON pb – push
0:00 CLOSE LATCHES pb – push
√LATCHES OPEN lt – lt off
0:05 √CLOSED lt – lt on

3. APDS CIRC PROT OFF pb – push
√CIRCUIT PROTECT OFF lt – lt on
FIXER OFF pb – push
√FIXERS OFF lt – lt on
0:00 RING OUT pb – push
√FINAL POSITION lt – lt off

0:20 4. When CAPTURE lt – lt on:
POWER OFF pb – push
ON pb – push
√CAPTURE lt – lt off

0:00 5. RING IN pb – push
0:10 POWER ON pb – push
√RING FINAL POSITION lt – lt off
CRT √DRV CMD – OFF
A7L √LATCHES CLOSED lt – lt on

WARNING

Vehicle separation may occur when ODS hooks opened if RING FINAL POSITION lt is ON or LATCHES CLOSED lt is OFF. Be prepared to pick up in ANY ATTITUDE SEPARATION (CONTINGENCY OPS), step 4

OPEN ODS HOOKS

6. APDS CIRC PROT OFF pb – push
√CIRCUIT PROTECT OFF lt – lt on
0:00 OPEN HOOKS pb – push
√HOOKS 1,HOOKS 2 CLOSED lt (two) – lt off
2:20 √OPEN lt (two) – lt on

Cont next page

EXTEND RING TO INITIAL POSITION FOR INTERFACE SEPARATION:

0:00		7. RING OUT pb – push
	CRT	√DRV CMD – ON
	A7L	√INTERF SEALED lt – lt off
3:40		√RING INITIAL POSITION lt – lt on
	CRT	√DRV CMD – OFF
		√PETAL POS BASE = 76 ± 3%
		8. √Interface clear of debris or other obstruction

RETRACT RING FOR SECOND MATING ATTEMPT:

0:00	A7L	9. RING IN pb – push
	CRT	√DRV CMD – ON [PETAL POS BASE (three) - decr]
		√CLUTCH – LOCK/blank
3:15	A7L	√READY TO HOOK lt – lt on
0:00		√HOOKS 1,HOOKS 2 OPEN lt (two) – lt off
≤1:30		√INTERF SEALED lt – lt on
2:20		√HOOKS 1,HOOKS 2 CLOSED lt (two) – lt on
		10. √APDS CIRCUIT PROTECT OFF lt – lt on
0:00		RING OUT pb – push
	CRT	√DRV CMD – ON
0:10	A7L	POWER ON pb – push
	CRT	√RING DRV CMD – OFF
0:00	A7L	11. OPEN LATCHES pb – push
		√LATCHES CLOSED lt – lt off
0:05		√OPEN lt – lt on
0:00		12. RING IN pb – push
0:10		√FINAL POSITION lt – lt on
0:20	CRT	√DRV CMD – OFF
	A7L	13. POWER OFF pb – push
		√STATUS lt (eighteen) – lt off

14. Perform DOCKING MECHANISM POWERDOWN, 8-6, if reqd, then:

15. Perform TERMINATE RNDZ OPS 22A, 4-22, step 1

16. Return to FLIGHT PLAN

ODS HOOKS OPEN – CONTINGENCY

NOTE

Procedure assumes PMA 2/3 hooks have not been closed at any time during the mission, and either ODS hooks could not be opened nominally or ODS hooks were driven full open and physical separation did not occur. If PMA 2/3 hooks have been closed at any point during the mission, go to PMA 2/3 HOOKS OPEN – CONTINGENCY, 8-30.

To undock, the crew will start in the ANY ATTITUDE SEPARATION (AAS), 5-23, to prep for undocking, then transition to this procedure. Once in this procedure, steps 3-6 will recapture the PMA petals in preparation for firing the ODS hook pyros. Steps 7-8 re-open the ODS hooks. The capture latches maintain the connection between the two vehicles. Steps 9-11 will discharge the active hook pyros. When the active docking ring is extended in step 12, separation is expected at the interface between the fixed shuttle APDS structural ring and the fixed PMA structural ring. Vehicles maintain a physical connection via the active docking ring until the capture latches are opened after returning to the AAS procedure in step 20. If there is no separation in step 12, the passive hook pyros are discharged in steps 14-16. Interface separation is attempted again in step 17. As in step 12, the vehicles will maintain a physical connection via the active docking ring capture latches. In step 20, the crew will transition back to the AAS procedure where the capture latches will be opened and the actual vehicle separation performed.

Procedure also assumes that an EVA crew is prepared to immediately perform the 96 BOLT EVA if ODS pyros are discharged and physical separation does not occur

1. Perform steps 1 and 2 of ANY ATTITUDE SEPARATION (CONTINGENCY OPS), 5-23

A7L 2. POWER ON pb – push

SM 167 DOCKING STATUS

RECAPTURE PMA PETALS

3. CLOSE LATCHES pb – push
   √LATCHES OPEN lt – lt off
   √CLOSED lt – lt on

4. APDS CIRC PROT OFF pb – push
   √CIRCUIT PROTECT OFF lt – lt on
   FIXER OFF pb – push
   √FIXERS OFF lt – lt on
   RING OUT pb – push
   √FINAL POSITION lt – lt off

5. When CAPTURE lt – lt on:
   POWER OFF pb – push
   ON pb – push
   √CAPTURE lt – lt off

Cont next page

0:00 6. RING IN pb – push
0:10 POWER ON pb – push
√RING FINAL POSITION lt – lt off
CRT √DRV CMD – OFF
A7L √LATCHES CLOSED lt – lt on

> WARNING
> Vehicle separation may occur when ODS hooks opened or pyros discharged if RING FINAL POSITION lt is ON or LATCHES CLOSED lt is OFF. Be prepared to pick up in ANY ATTITUDE SEPARATION, (CONTINGENCY OPS) step 4, 5-23

RE-OPEN CLOSED HOOKS

A7L 7. APDS CIRC PROT OFF pb – push
√CIRCUIT PROTECT OFF lt – lt on
OPEN HOOKS pb – push

A7L 8. When good HOOKS 1(2) OPEN lt on
CRT and jammed HK2(1) POS not decr:
A7L POWER OFF pb – push
ON pb – push

DISCHARGE ACTIVE HOOK PYROS

A6L 9. PYRO PWR MN A,MN C (two) – ON
A7L PYROS A_P,B_P,C_P (three) – ON
√A_P,B_P,C_P lt (three) – lt on
PYRO CIRC PROT OFF pb – push
√CIRCUIT PROTECT OFF lt – lt on

10. ACT HOOKS FIRING pb – push

11. PYRO CIRC PROT ON pb – push
√CIRCUIT PROTECT OFF lt – lt off
PYROS A_P,B_P,C_P (three) – OFF
√A_P,B_P,C_P lt (three) – lt off
A6L PYRO PWR MN A,MN C (two) – OFF

EXTEND RING TO INITIAL POSITION FOR INTERFACE SEPARATION

A7L 12. APDS CIRC PROT OFF pb – push
√CIRCUIT PROTECT OFF lt – lt on
0:00 RING OUT pb – push
√INTERF SEALED lt – lt off
CRT If interface separates [PETAL POS BASE (three) incr after 20 sec]:
Go to step 19

RECONFIGURE AND DISCHARGE PASSIVE HOOK PYROS

A7L 13. POWER ON pb – push
A6L PSU PWR MN A,MN B (two) – OFF
A7L RING IN pb – push
APDS POWER A_{DS},B_{DS},C_{DS} (three) – OFF
– ON
A6L PSU PWR MN A,MN B (two) – ON
CRT When PETAL POS BASE (three) = ~6% and not decr:
A7L POWER ON pb – push

Cont next page

A6L 14. PYRO PWR MN A,MN C (two) – ON
A7L PYROS A_P,B_P,C_P (three) – ON
√A_P,B_P,C_P lt (three) – lt on
PYRO CIRC PROT OFF pb – push
√CIRCUIT PROTECT OFF lt – lt on

15. PAS HOOKS FIRING pb – push

16. PYRO CIRC PROT ON pb – push
√CIRCUIT PROTECT OFF lt – lt off
PYROS A_P,B_P,C_P (three) – OFF
√A_P,B_P,C_P lt (three) – lt off
A6L PYRO PWR MN A,MN C (two) – OFF

<u>REATTEMPT EXTENDING RING TO INITIAL POSITION FOR INTERFACE SEPARATION</u>

A7L 17. √APDS CIRCUIT PROTECT OFF lt – lt on
0:00 RING OUT pb – push
√INTERF SEALED lt – lt off
CRT If interface separates [PETAL POS BASE (three) incr after 20 sec]:
Go to step 19

<u>RECONFIGURE AND PREPARE FOR 96 BOLT EVA</u>

A7L 18. POWER ON pb – push
RING IN pb – push
CRT When PETAL POS BASE (three) = ~6% and not decr:
A7L POWER OFF pb – push
Perform DOCKING MECHANISM POWERDOWN, 8-6, then:
Go to 96 BOLT EVA TIMELINE (EVA, <u>ORB CONT EVA)</u> >>

<u>FINAL PREPARATION FOR VEHICLE SEPARATION</u>

~3:20 19. √RING INITIAL POSITION lt – lt on
CRT √DRV CMD – OFF
√PETAL POS BASE (three) = 76 ± 3%

20. Go to step 3 of ANY ATTITUDE SEPARATION (<u>CONTINGENCY OPS</u>), 5-23. Expect no spring assisted separation

PMA 2/3 HOOKS OPEN – CONTINGENCY

NOTE

Procedure assumes PMA 2/3 hooks could not be opened nominally or ODS hooks were driven fully open and physical separation did not occur and PMA 2/3 were closed at some point during the mission.

To undock, the crew will start in the ANY ATTITUDE SEPARATION (AAS), 5-23, to prep for undocking, then transition to this procedure. Once in this procedure, steps 3-6 will recapture the PMA petals in preparation for firing the ODS hook pyros. Steps 7-9 re-open the ODS hooks. The capture latches maintain the connection between the two vehicles. Step 10 commands the ring out to verify that the initial problem still exists before firing the pyros. When the active docking ring is extended in step 10, separation is expected at the interface between the fixed shuttle APDS structural ring and the fixed PMA structural ring. Vehicles maintain a physical connection via the active docking ring until the capture latches are opened after returning to the AAS procedure in step 23. Steps 12-14 will discharge the passive hook pyros. Interface separation is attempted again in step 15. As in step 10, the vehicles will maintain a physical connection via the active docking ring capture latches. If there is no separation in step 15, the active hook pyros are discharged in steps 17-19. Interface separation is attempted again in step 20. As in step 10, the vehicles will maintain a physical connection via the active docking ring capture latches. In step 23, the crew will transition back to the AAS procedure where the capture latches will be opened and the actual vehicle separation performed.

Procedure also assumes that an EVA crew is prepared to immediately perform the 96 BOLT EVA if ODS pyros are discharged, and physical separation does not occur

1. Perform steps 1 and 2 of ANY ATTITUDE SEPARATION (CONTINGENCY OPS), 5-23

A7L 2. POWER ON pb – push

SM 167 DOCKING STATUS

RECAPTURE PMA PETALS

3. CLOSE LATCHES pb – push
   √LATCHES OPEN lt – lt off
   √CLOSED lt – lt on

4. APDS CIRC PROT OFF pb – push
   √CIRCUIT PROTECT OFF lt – lt on
   FIXER OFF pb – push
   √FIXERS OFF lt – lt on
   RING OUT pb – push
   √FINAL POSITION lt – lt off

5. When CAPTURE lt – lt on:
   POWER OFF pb – push
   ON pb – push
   √CAPTURE lt – lt off

0:00 6. RING IN pb – push
0:10 POWER ON pb – push
√RING FINAL POSITION lt – lt off
CRT √DRV CMD – OFF
A7L √LATCHES CLOSED lt – lt on

Cont next page

		WARNING Vehicle separation may occur when ODS hooks opened or pyros discharged if RING FINAL POSITION lt is ON or LATCHES CLOSED lt is OFF. Be prepared to pick up in ANY ATTITUDE SEPARATION,(CONTINGENCY OPS), step 4, 5-23
		OPEN ODS HOOKS
		7. APDS CIRC PROT OFF pb – push
		√CIRCUIT PROTECT OFF lt – lt on
0:00		8. OPEN HOOKS pb – push
		√HOOKS 1,HOOKS 2 CLOSED lt (two) – lt off
	CRT	√HK1,HK2 POS (two) < 92% and decr
2:20	A7L	9. √HOOKS 1,HOOKS 2 OPEN lt (two) – lt on
		ATTEMPT TO EXTEND RING TO INITIAL POSITION FOR INTERFACE SEPARATION
0:00	A7L	10. RING OUT pb – push
		√INTERF SEALED lt – lt off
	CRT	If interface separates [PETAL POS BASE (three) incr after 20 sec]:
		Go to step 22
		RECONFIGURE AND DISCHARGE PASSIVE HOOK PYROS
	A7L	11. POWER ON pb – push
	A6L	PSU PWR MN A,MN B (two) – OFF
	A7L	RING IN pb – push
		APDS POWER A_{DS},B_{DS},C_{DS} (three) – OFF
		– ON
	A6L	PSU PWR MN A,MN B (two) – ON
	CRT	When PETAL POS BASE (three) = ~6% and not decr:
	A7L	POWER ON pb – push
	A6L	12. PYRO PWR MN A,MN C (two) – ON
	A7L	PYROS A_P,B_P,C_P (three) – ON
		√A_P,B_P,C_P lt (three) – lt on
		PYRO CIRC PROT OFF pb – push
		√CIRCUIT PROTECT OFF lt – lt on
		13. PAS HOOKS FIRING pb – push
		14. PYRO CIRC PROT ON pb – push
		√CIRCUIT PROTECT OFF lt – lt off
		PYROS A_P,B_P,C_P (three) – OFF
		√A_P,B_P,C_P lt (three) – lt off
	A6L	PYRO PWR MN A,MN C (two) – OFF
		REATTEMPT EXTENDING RING TO INITIAL POSITION FOR INTERFACE SEPARATION
	A7L	15. √APDS CIRCUIT PROTECT OFF lt – lt on
0:00		RING OUT pb – push
		√INTERF SEALED lt – lt off
	CRT	If interface separates [PETAL POS BASE (three) incr after 20 sec]:
		Go to step 22

Cont next page

RECONFIGURE AND DISCHARGE ACTIVE HOOK PYROS

A7L 16. POWER ON pb – push
A6L PSU PWR MN A,MN B (two) – OFF
A7L RING IN pb – push
APDS POWER A_{DS},B_{DS},C_{DS} (three) – OFF
– ON
A6L PSU PWR MN A,MN B (two) – ON
CRT When PETAL POS BASE (three) = ~6% and not decr:
A7L POWER ON pb – push

A6L 17. PYRO PWR MN A,MN C (two) – ON
A7L PYROS A_P,B_P,C_P (three) – ON
√A_P,B_P,C_P lt (three) – lt on
PYRO CIRC PROT OFF pb – push
√CIRCUIT PROTECT OFF lt – lt on

18. ACT HOOKS FIRING pb – push

19. PYRO CIRC PROT ON pb – push
√CIRCUIT PROTECT OFF lt – lt off
PYROS A_P,B_P,C_P (three) – OFF
√A_P,B_P,C_P lt (three) – lt off
A6L PYRO PWR MN A,MN C (two) – OFF

REATTEMPT EXTENDING RING TO INITIAL POSITION FOR INTERFACE SEPARATION

A7L 20. √APDS CIRCUIT PROTECT OFF lt – lt on
0:00 RING OUT pb – push
√INTERF SEALED lt – lt off
CRT If interface separates [PETAL POS BASE (three) incr after 20 sec]:
Go to step 22

RECONFIGURE AND PREPARE FOR 96 BOLT EVA

A7L 21. POWER ON pb – push
RING IN pb – push
CRT When PETAL POS BASE (three) = ~6% and not decr:
A7L POWER ON pb – push
Perform DOCKING MECHANISM POWERDOWN, 8-6, then:
Go to 96 BOLT EVA TIMELINE (EVA, ORB CONT EVA) >>

FINAL PREPARATION FOR VEHICLE SEPARATION

~3:20 A7L 22. √RING INITIAL POSITION lt – lt on
CRT √DRV CMD – OFF
√PETAL POS BASE (three) = 76 ± 3%

23. Go to step 3 of ANY ATTITUDE SEPARATION (CONTINGENCY OPS), 5-23. Expect no spring assisted separation

APDS FAILED CAPTURE RECONFIG

SM 167 DOCKING STATUS

	A7L	1. If LATCHES OPEN lt – lt on:
0:00		CLOSE LATCHES pb – push
		√LATCHES OPEN lt – lt off
0:05		√CLOSED lt – lt on
		2. √APDS CIRCUIT PROTECT OFF lt – lt on
		3. FIXER OFF pb – push
		√FIXERS OFF lt – lt on
0:00		RING OUT pb – push
	CRT	√PETAL POS BASE (three) – incr
0:05		√CLUTCH – LOCK/blank
	A7L	√RING INITIAL POSITION lt – lt on (for ~16 sec), then lt off
		* If RING FORWARD POSITION lt failed on (ring stops *
		* after 10 sec): *
		* RING OUT pb – push *
		* Within 10 sec: *
		* APDS POWER A_{DS},B_{DS},C_{DS} (three) – OFF *
		* APDS POWER A_{DS},B_{DS},C_{DS} (three) – ON *
		* CIRC PROT OFF pb – push *
		* √CIRCUIT PROTECT OFF lt – lt on *
		* √RING INITIAL POSITION lt – lt on (for ~16 sec), *
		* then lt off *
	CRT	* When PETAL POS BASE (three) = 98 ± 2%: *
	A7L	* RING OUT pb – push *
		* After 10 sec: *
	CRT	* √RING DRV CMD – OFF *
1:15	A7L	4. √RING FORWARD POSITION lt – lt on
		√ALIGNED lt – lt on
		√FIXERS OFF lt – lt off
	CRT	√PETAL POS BASE (three): 98 ± 2%
0:00	A7L	5. RING IN pb – push
	CRT	√CLUTCH – LOCK/blank
	A7L	√RING FORWARD POSITION lt – lt off
1:15		√INITIAL POSITION lt – lt on (for ~16 sec), then lt off
		* If RING FINAL POSITION lt failed on (ring stops after 10 sec): *
0:00		* RING IN pb – push *
		* √FORWARD POSITION lt – lt off *
1:15		* √INITIAL POSITION lt – lt on (for ~16 sec), then lt off *
4:50	CRT	* When PETAL POS BASE (three) = 5 ± 3% and not decr: *
	A7L	* POWER ON pb – push *
		6. √RING FINAL POSITION lt – lt on
5:00	CRT	√DRV CMD – OFF
0:00	A7L	7. APDS CIRC PROT OFF pb – push
		√CIRCUIT PROTECT OFF lt – lt on
		RING OUT pb – push
	CRT	√CLUTCH – LOCK/blank
0:10	A7L	√RING FINAL POSITION lt – lt off

Cont next page

```
                    * If RING INITIAL POSITION lt failed on (ring stops after *
                    *  1 sec, and Clutch drives to SLIP):                     *
                    *     FIXER OFF pb – push                                 *
                    *    √FIXERS OFF lt – lt on                               *
                    *     RING OUT pb – push                                  *
CRT                 *     When PETAL POS BASE (three) = 76 ± 3%:              *
A7L                 *         POWER OFF pb – push                             *
                    *     POWER ON pb – push                                  *
                    *    √FIXERS OFF lt – lt off                              *
                    *     APDS CIRC PROT OFF pb – push                        *
                    *           √CIRCUIT PROTECT OFF lt – lt on               *
                    *     RING OUT pb – push                                  *
                    *     After 1 sec:                                        *
CRT                 *       √RING DRV CMD – OFF                               *
                    *                                                         *
A7L                 * If RING FORWARD POSITION lt failed on (ring stops       *
                    *  after 10 sec):                                         *
                    *     RING OUT pb – push                                  *
                    *     Within 10 sec:                                      *
                    *         APDS POWER A_DS,B_DS,C_DS (three) – OFF         *
                    *     APDS POWER A_DS,B_DS,C_DS (three) – ON              *
                    *             CIRC PROT OFF pb – push                     *
                    *           √CIRCUIT PROTECT OFF lt – lt on               *
                    *     When RING INITIAL POSITION lt on:                   *
                    *         RING OUT pb – push                              *
```

3:40 8. √RING INITIAL POSITION lt – lt on

CRT √PETAL POS BASE (three) – 76 ± 3%

√CLUTCH – blank/SLIP

```
                    * If CLUTCH – blank/blank:                                *
A7L                 *    √APDS CIRCUIT PROTECT OFF lt – lt on                 *
                    *     RING OUT pb – push (expect 1 sec of drive),         *
                    *       wait 10 sec                                       *
CRT                 *    √RING DRV CMD – OFF                                  *
                    * If CLUTCH – LOCK/blank:                                 *
A7L                 *    √RING INITIAL POSITION lt – lt on                    *
                    *    √FIXERS OFF lt – lt off                              *
                    *    √APDS CIRCUIT PROTECT OFF lt – lt on                 *
                    *     RING OUT pb – push (expect 1 sec of drive),         *
                    *       wait 10 sec                                       *
                    *    √RING DRV CMD – OFF                                  *
CRT                 * If not CLUTCH – blank/SLIP:                             *
                    *    √MCC                                                 *
```

A7L 9. POWER OFF pb – push

√STATUS lt (eighteen) – lt off

PMA 2/3 HOOKS CLOSE

> CAUTION
> Procedure assumes one ODS Hook Gang has failed and one PMA 2/3 Hook Gang can be used to recover a total of 12 hooks. ODS to PMA 2/3 interface must be hard mated, as verified by the ODS X3/X4 connector mate indications, in order to provide PMA 2/3 active hook control and tlm through the interface X-connectors

> NOTE
> PMA2/3 Active Hooks 1(2) engage ODS Passive Hooks 2(1). Therefore, if ODS Active Hooks 1(2) is failed, it is preferrable to close PMA Active Hooks 2(1)

SM 167 DOCKING STATUS

CRT 1. √ODS CONN X3,X4 (two) – ON

A6L 2. √cb PMA 2/3 GRP 1,2 HOOKS (eight) – op
√PMA 2/3 HOOKS SYS A,SYS B (two) – ctr
√GRP 1 tb – bp
√GRP 2 tb – bp

TO CLOSE HOOKS 1, PERFORM STEPS 3 THRU 6

3. cb PMA 2/3 GRP 1 HOOKS SYS A OP,CL (two) – cl
B OP,CL (two) – cl
√PMA 2/3 HOOKS GRP 1 tb – OP
CRT √HK1 IND OP – 1,2
√IND CL – blank
√HK CLS 1/3/5, 7/9/11 (two) – blank

* If either IND CL present, hooks may operate single *
* motor. If both IND CL present, hooks may not drive: *
* √MCC *

0:00 A6L 4. PMA 2/3 HOOKS SYS A,SYS B (two) – CL
√GRP 1 tb – bp
CRT √HK1 CMD CL – 1,2
√IND OP – blank

2:20 A6L 5. √PMA 2/3 HOOKS GRP 1 tb – CL
CRT √HK1 IND CL – 1,2
√CMD CL – blank
√HK CLS 1/3/5, 7/9/11 (two) – CL

A6L 6. PMA 2/3 HOOKS SYS A,SYS B (two) – ctr
cb PMA 2/3 GRP 1 HOOKS SYS A OP,CL (two) – op
B OP,CL (two) – op

TO CLOSE HOOKS 2, PERFORM STEPS 7 THRU 10

7. cb PMA 2/3 GRP 2 HOOKS SYS A OP,CL (two) – cl
B OP,CL (two) – cl
√PMA 2/3 HOOKS GRP 2 tb – OP

CRT √HK2 IND OP – 1,2
√CL – blank
√HK CLS 2/4/6, 8/10/12 (two) – blank

```
* If either IND CL present, hooks may operate single      *
*   motor.  If both IND CL present, hooks may not drive:   *
*     √MCC                                                 *
```

0:00 A6L 8. PMA 2/3 HOOKS SYS A,SYS B (two) – CL
√GRP 2 tb – bp

CRT √HK2 CMD CL – 1,2
√IND OP – blank

2:20 A6L 9. √PMA 2/3 HOOKS GRP 2 tb – CL

CRT √HK2 IND CL – 1,2
√CMD CL – blank
√HK CLS 2/4/6, 8/10/12 (two) – CL

A6L 10. PMA 2/3 HOOKS SYS A,SYS B (two) – ctr
cb PMA 2/3 GRP 2 HOOKS SYS A OP,CL (two) – op
B OP,CL (two) – op

Cont next page

PMA 2/3 HOOKS OPEN

> **CAUTION**
> ODS to PMA 2/3 interface must remain hard mated by at least one gang of ODS hooks through entire procedure in order to provide PMA 2/3 active hook control and tlm through the interface X-connectors

SM 167 DOCKING STATUS

A6L 1. √cb PMA 2/3 GRP 1,2 HOOKS (eight) – op
√PMA 2/3 HOOKS SYS A,SYS B (two) – ctr (tb-bp)
√GRP 1 tb – bp
√GRP 2 tb – bp

TO OPEN HOOKS 1, PERFORM STEPS 2 THRU 5

2. cb PMA 2/3 GRP 1 HOOKS SYS A OP,CL (two) – cl
B OP,CL (two) – cl
√PMA 2/3 HOOKS GRP 1 tb – CL
CRT √HK1 IND CL – 1,2
√OP – blank
√HK CLS 1/3/5, 7/9/11 (two) – CL

* If either IND OP present, hooks may operate single *
* motor. If both IND OP present, hooks may not drive. *

0:00 A6L 3. PMA 2/3 HOOKS SYS A,SYS B (two) – OP
√GRP 1 tb – bp
CRT √HK1 CMD OP – 1,2
√IND CL – blank
√HK CLS 1/3/5, 7/9/11 (two) – blank

2:20 A6L 4. √PMA 2/3 HOOKS GRP 1 tb – OP
CRT √HK1 IND OP – 1,2
√CMD OP – blank

* If PMA 2/3 HOOKS fail to drive, or do not reach end-of- *
* travel after single motor drive time (~4:40): *
A6L * PMA 2/3 HOOKS SYS A,SYS B (two) – ctr *
* cb PMA 2/3 GRP 1 HOOKS SYS A OP,CL (two) – op *
* cb PMA 2/3 GRP 1 HOOKS SYS B OP,CL (two) – op *
* Perform PMA 2/3 HOOKS OPEN – CONTINGENCY, *
* 8-30 *

5. PMA 2/3 HOOKS SYS A,SYS B (two) – ctr
cb PMA 2/3 GRP 1 HOOKS SYS A OP,CL (two) – op
B OP,CL (two) – op

Cont next page

TO OPEN HOOKS 2, PERFORM STEPS 6 THRU 9

6. cb PMA 2/3 GRP 2 HOOKS SYS A OP,CL (two) – cl
B OP,CL (two) – cl
√PMA 2/3 HOOKS GRP 2 tb – CL

CRT √HK2 IND CL – 1,2
√IND OP – blank
√HK CLS 2/4/6, 8/10/12 (two) – CL

```
*  If either IND OP present, hooks may operate single      *
*   motor.  If both IND OP present, hooks may not drive    *
```

0:00 A6L 7. PMA 2/3 HOOKS SYS A,SYS B (two) – OP
√GRP 2 tb – bp

CRT √HK2 CMD OP – 1,2
√IND CL – blank
√HK CLS 2/4/6, 8/10/12 (two) – blank

2:20 A6L 8. √PMA 2/3 HOOKS GRP 2 tb – OP

CRT √HK2 IND OP – 1,2
√CMD OP – blank

```
*  If PMA 2/3 HOOKS fail to drive, or do not reach          *
*   end-of-travel after single motor drive time (~4:40):    *
A6L  *      PMA 2/3 HOOKS SYS A,SYS B (two) – ctr           *
*      cb PMA 2/3 GRP 2 HOOKS SYS A OP,CL (two) – op *
*      cb PMA 2/3 GRP 2 HOOKS SYS B OP,CL (two) – op *
*      Perform PMA 2/3 HOOKS OPEN – CONTINGENCY, *
*        8-30                                                *
```

9. PMA 2/3 HOOKS SYSA,SYS B (two) – ctr
cb PMA 2/3 GRP 2 HOOKS SYS A OP,CL (two) – op
B OP,CL (two) – op

REFERENCE DATA

APDS FAILURE/IMPACT MATRIX 8-40
(TLM) 8-43

APDS FAILURE/IMPACT MATRIX

APDS Status lt	APDS FAILURE s = potential single failure m = multiple failures reqd	IMPACT	OFF NOMINAL PROCEDURE (IF APPLICABLE)
POWER ON pb	Failed ON (m)	Continuous PWR ON will inhibit ring, damping, and fixer commands. Relays may overheat preventing future powerup. [Detectable only during powerup or ring drive operations]	RING DRV CMD OFF
	Failed OFF (m)	If all STATUS lts are off, loss of all logic power to APDS. Docking system cannot be operated	POWER FAILED OFF (STATUS LTS OFF)
APDS CIRCUIT PROTECT OFF	Failed ON (m)	RING OUT, OPEN LATCHES, OPEN HOOKS, and UNDOCKING pb commands are enabled	
	Failed OFF (m)	No RING OUT, OPEN LATCHES, OPEN HOOKS, or UNDOCKING pb capability	APDS CIRCUIT PROTECT OFF LT FAILED OFF
RING ALIGNED	Failed ON (m)	Prime alignment cue lost. Use CRT RING ALIGN and PETAL POS BASE 1,2,3 indications as backup. Erroneous ind possible with significant pitch motion (sensors rotated 360°)	
	Failed OFF (s)	Prime alignment cue lost. Use CRT RING ALIGN and PETAL POS BASE 1,2,3 indications as backup	
RING INITIAL POSITION	Failed ON (s)	Ring will only drive for 1 sec with RING OUT pb commands. Slip clutch will drive alternately between the SLIP and LOCK positions	Starred blocks in the DOCKING RING EXTENSION and DOCKING MECHANISM DEMATE/REMATE
	Failed OFF (m)	INITIAL CONTACT lt disabled. Slip clutch will not drive to SLIP	APDS DIRECT DRIVE USING BOB required to drive slip clutch
FIXERS OFF	Failed ON (m)	IFM may be required to drive clutch to SLIP if failure occurs during ring extension. During docking, only centering springs maintain alignment during ring retraction	FIXERS OFF LT FAILED ON
	Failed OFF (m)	Unable to inhibit fixer operation during manual ring drive	FIXERS OFF LT FAILED OFF
HOOKS 1(2) OPEN	Failed ON (s)	Logic prevents hooks from driving open	HOOKS 1(2) OPEN LT FAILED ON [UNDOCKING]
	Failed OFF (m)	Hooks will not stop driving at Open position	
LATCHES CLOSED	Failed ON (s)	If ring retraction to Final Position is attempted, ring will stall against capture latches if latches are failed closed. No impact if latches open on SPEC 167	
	Failed OFF (m)	No impact to nominal sequence. [May not be able to recapture, if reqd, if capture latches are not closed. Multiple failures reqd to inadvertently drive a latch motor open]	

APDS FAILURE/IMPACT MATRIX (Cont)

APDS Status lt	APDS FAILURE s = potential single failure m = multiple failures reqd	IMPACT	OFF NOMINAL PROCEDURE (IF APPLICABLE)
UNDOCK COMPLET	Failed ON (s)	If light comes on when APDS CIRC PROT OFF pb is pressed, hooks may be continuously commanded open.	
	Failed OFF (m)	No impact. Indication is not used by any logic	
INITIAL CONTACT	Failed ON (s)	One contact cue disabled. RING ALIGNED lt, and CRT RING ALIGN and PETAL POS BASE 1,2,3 indications, may be used as contact indications	
	Failed OFF (m)	One contact cue disabled. [Not detectable prior to contact]	
CAPTURE	Failed ON (m)	Auto sequence may be active (dampers, fixers, ring/hook drive). May be unable to reset dampers. Potential Shuttle/PMA 2/3 mechanism damage if no damping or damping failed on	CAPTURE LT FAILED ON
	Failed OFF (m)	Auto Sequence may be inactive; no active damping resulting in excessive relative motion	Must use visual cues (no sep) and DAMPING indication to verify capture
RING FORWARD POSITION	Failed ON (s)	Ring will only drive out for 10 sec at a time	Starred blocks in affected procedures
	Failed OFF (m)	Ring will continue to drive at Forward Position until terminated by a PWR On/Off reset	
READY TO HOOK	Failed ON (s)	Hooks will begin driving closed with RING IN pb command	READY TO HOOK LT FAILED ON
	Failed OFF (m)	Auto hook drive disabled. Ring will not stop driving at In-Between Hooks position	Manual CLOSE HOOKS pb command required to drive hooks closed per starred block on DOCKING SEQUENCE (Cue Card)
INTERF SEALED	Failed ON (s)	No impact to APDS operations. Indication is not used by any logic	
	Failed OFF (m)	No impact to APDS operations. Indication is not used by any logic	
HOOKS 1(2) CLOSED	Failed ON (s)	Logic prevents associated hooks from driving closed	HOOKS 1(2) CLOSED LT FAILED ON
	Failed OFF (m)	Hooks will not stop driving when closed position reached	HOOKS 1(2) NOT CLOSED WITHIN SINGLE MTR TIME if hooks not verified closed via CRT
LATCHES OPEN	Failed ON (s)	Ring will drive in once CAPTURE is achieved, or immediately if CAPTURE already present	
	Failed OFF (m)	If Latches failed closed, ring will stall against Latches if Ring commanded to Final Position	LATCHES OPEN LT FAILED OFF
RING FINAL POSITION	Failed ON (s)	During ring retraction, ring will only drive 10 sec 1st time. After 2nd Ring In command, ring will not stop driving at In-Between Hooks position and/or Final Position	RING FINAL POSITION LT FAILED ON
	Failed OFF (m)	During Ring retraction to Final Position, ring will not stop driving at Final Position	

APDS FAILURE/IMPACT MATRIX (Cont)

APDS Status lt	**APDS FAILURE** s = potential single failure m = multiple failures reqd	**IMPACT**	**OFF NOMINAL PROCEDURE (IF APPLICABLE)**
APDS POWER **A_{DS}, B_{DS}, C_{DS}**	Failed ON (s)	One logic bus remains powered. Still at least two failures from any inadvertent ops	
	Failed OFF (s)	Loss of one capture latch motor. Next failure results in loss of all APDS avionics logic	APDS POWER FAILED OFF
A6L SYSTEM POWER **A(B) tb**	Failed OFF (s)	Loss of redundancy to APDS logic busses, Control Panel Power busses, and PMA hook power. Loss of some docking lights and vestibule depress valves capability	
PYROS **A_P, B_P, C_P**	Failed ON (s)	One Pyro logic bus powered. Still more than two failures from charging pyros	
	Failed OFF (s)	Loss of Pyro logic redundancy	
PYRO CIRCUIT PROTECT OFF	Failed ON (m)	Possible loss of Pyro charge/fire inhibits	
	Failed OFF (m)	Loss of capability to arm/fire Pyros	

APDS FAILURE/IMPACT MATRIX (TLM)

APDS TLM	APDS FAILURE s = potential single failure m = multiple failures reqd	IMPACT	OFF NOMINAL PROCEDURE (IF APPLICABLE)
DAMPING	Failed ON (s)	Mechanism may not have compliance on contact; load capability may be exceeded. Failed-on dampers slow ring drive to about single motor drive time	DAMPING FAILED ON
	Failed OFF (s)	No impact for single failure. If all dampers failed, large rates/misalignments may cause mechanism to hit hard stops, exceeding its load capability	
RING FIXERS	Failed ON (s)	Mechanism may not have compliance on contact; load capability may be exceeded	FIXERS FAILED ON
	Failed OFF (s)	No impact for single fixer failure. For multiple failure case, alignment may be lost during ring retraction. [Detectable only during ring drive operations]	
CLUTCH – SLIP	Failed ON (s)	If slip clutch locking mechanism failed in SLIP, resistance created by dampers and/or pusher springs will load actuator sufficiently to prevent ring motion	APDS DIRECT DRIVE USING BOB required to drive slip clutch to LOCK
	Failed OFF (s)	Must verify clutch in SLIP prior to contact	
CLUTCH – LOCK	Failed ON (s)	Must verify clutch in SLIP prior to contact, otherwise mechanism may not have compliance on contact; load capability may be exceeded	APDS DIRECT DRIVE USING BOB required to drive slip clutch to SLIP
	Failed OFF (s)	If slip clutch locking mechanism failed in SLIP, resistance created by dampers and/or pusher springs will load ring actuator sufficiently to prevent ring motion	
CAP MAN REL	Failed OP (s)	If latch is released, may be unable to draw interfaces together	
CNTL PNL PWR	Failed ON (s)	One logic bus remains powered. Still at least two failures from any inadvertent ops	
	Failed OFF (s)	Loss of pb command redundancy. CNTL PNL PWR A will remove power from columns 1 & 3 of the STATUS light matrix. CNTL PNL PWR C will remove power from columns 2 and 4 of the STATUS lights matrix. (Pyro pbs are not affected)	Next failure may require APDS Direct Drive IFM to complete docking or separate, or require manual capture latch release
RNG DR BUS 1(2)	Failed OFF (s)	Loss of ring drive motor 1(2)	
HKS DR BUS 1(2)	Failed OFF (s)	Loss of hook drive motor 1(2) [Affects both Hooks 1 & 2]	
DAMPER BUS 1(2)	Failed OFF (s)	BUS 1 (MN A): Dampers 1,2 failed. BUS 2 (MN B): Damper 3 failed	
FIXER BUS 1(2)	Failed OFF (s)	BUS 1 (MN A): Fixers 1,2 failed. BUS 2 (MN B): Fixers 3,4,5 failed	

This Page Intentionally Blank

CUE CARD CONFIGURATION

RCS BURN (+X, -X, Multi-axis) (Front) ..... CC 9-3
RENDEZVOUS PRPLT PAD (Back) ..... CC 9-4
KU OPS (Front) ..... CC 9-5
(Back) ..... CC 9-6
APPROACH (Front) ..... CC 9-7
VBAR APPROACH (Back) ..... CC 9-8
C/L CAMERA TARGET ALIGNMENT (+VBAR) (Front) ..... CC 9-9
(Back) ..... CC 9-10
DOCKING SEQUENCE (Front) ..... CC 9-11
(Back) ..... CC 9-12
STOPWATCH RDOT CONVERSION (Front) ..... CC 9-13
(Back) ..... CC 9-14
GPC/MDM FAILURE RESPONSE DURING RNDZ (Front) ..... CC 9-15
RNDZ REF DATA (Back) ..... CC 9-16
C/L CAMERA CORRIDOR AND ALIGNMENT ..... CC 9-17
CAMERA A/D RANGE RULER ..... CC 9-18
C/L CAMERA ZOOM CALIBRATION (RING READY FOR DOCK) ..... CC 9-19
760 PGSC DISPLAY OF C/L CAMERA CORRIDOR AND ALIGNMENT ..... CC 9-20
CAMERA A/D RANGE RULER ..... CC 9-21
FLIGHT SUB ANG RULER ..... CC 9-22
V10 MONITOR CORRIDOR ..... CC 9-23
A31P PGSC DISPLAY OF C/L CAMERA CORRIDOR AND ALIGNMENT ..... CC 9-24
A31P PGSC CAMERA A/D RANGE RULER ..... CC 9-25
RCS FAILURE RESPONSE DURING PROX OPS ..... CC 9-27
RCS/DPS/EPS FAILURE IMPACTS ..... CC 9-28

This Page Intentionally Blank

HOOK VELCRO

HOOK VELCRO

RCS BURN (+X, -X, Multi-axis)

1. GNC, OPS 202 PRO
   GNC ORBIT MNVR EXEC
   √RCS SEL, ITEM 4 – (*****)

2. If onboard computed burn:
   √TIG and TGT PEG 7 ΔVs per Final solution
   √Guidance option is LAMBERT
   If ground computed burn:
   √TGT data per Burn Pad (reload WT as reqd)

   LOAD – ITEM 22 EXEC
   TIMER – ITEM 23 EXEC

3. If +X burn:
   DAP: A/AUTO/ALT(B/ALT as reqd)
   MNVR – ITEM 27 EXEC (*****)
   If RR ops:
   KU – AUTO TRK
   GNC 33 REL NAV
   INH Angles – ITEM 24 EXEC (*****)

TIG-0:30

4. FLT CNTLR PWR – ON
   DAP TRANS: as reqd
   If Multi-axis:
   DAP: A/AUTO/PRI
   If +X or -X:
   DAP: A/INRTL/PRI

TIG

5. If VGO Z is neg, Z,X,Y seq;
   otherwise, X,Y,Z

   THC: Trim VGOs < 0.2 fps

   FLT CNTLR PWR – OFF
   DAP: ALT
   DAP TRANS: PULSE/PULSE/PULSE
   GNC, OPS 201 PRO

6. If +X burn:
   DAP: A/AUTO(B/AUTO/ALT as reqd)

   If RR ops, when ATT ERR < 30 deg:
   KU – GPC
   √KU TRACK tb – gray
   GNC 33 REL NAV
   AUTO Angles – ITEM 23 EXEC (*****)

7. When in attitude:
   DAP: A/AUTO/VERN(ALT)

RNDZ-1a/120/O/B

(reduced copy)

TOP, BACK OF 'RCS BURN (+X, -X, Multi-axis)'

HOOK VELCRO	HOOK VELCRO

RENDEZVOUS PRPLT PAD

When L or R RCS QTY < 1 :

I'CNCT: 2 OMS to RCS (ORB PKT, RCS)

When G23 3 OMS/RCS QTY > 4 :

I'CNCT TK SWITCH: (ORB PKT, RCS)

When G23 5 OMS/RCS QTY > 6 :

I'CNCT RETURN (ORB PKT, RCS)

When L or R RCS QTY < 7 :

or when FRCS QTY < 8 :

DAP: NO LO Z

When L or R RCS QTY < 9 :

or when FRCS QTY < 10 :

If prior to Ti:
Do not perform Ti
If after Ti, but prior to TORVA init (+X burns to start TORVA are complete):
Go to RNDZ BREAKOUT (CONTINGENCY OPS), 5-18
If during TORVA:
Go to SHUTTLE NOSE IN-PLANE BREAKOUT (CONTINGENCY OPS), 5-16
If stable on +VBAR:
Go to VBAR BREAKOUT (CONTINGENCY OPS), 5-14

RNDZ-1b/120/O/A

(reduced copy)

HOOK
VELCRO

KU OPS

1. CONFIGURE KU FOR RR TGT ACQ

GNC 33 REL NAV

CRT √SV SEL, ITEM 4 – FLTR
√INH RNG, ITEM 18 – (*)
RDOT, ITEM 21 – (*)
Angles, ITEM 24 – (*)

KU ANT ENA – ITEM 2 EXEC (*)
GNC I/O RESET
A2 DIGI-DIS sel – R/RDOT
A1U KU PWR – STBY
MODE – RDR PASSIVE
√RDR OUTPUT – HI
CNTL – PNL (wait 3 sec)
PWR – ON

KU SEL – GPC >>

2. AUTO TRK ACQ

KU SEL – AUTO TRK
SLEW – as reqd (as seen in COAS)
√EL, AZ angles < 30 deg
KU SEARCH – SEARCH (tb–gray)
Repeat slew and search as reqd
If acquisition not successful, √MCC >>

3. RR NAVIGATION

GNC 33 REL NAV

CRT √RADAR, ITEM 13 – (*)

* If RATIO > 1.0: *
* √MCC *

FLTR TO PROP – ITEM 8 EXEC (*)
AUT RNG – ITEM 17 EXEC (*)
RDOT – ITEM 20 EXEC (*)
Angles – ITEM 23 EXEC (*) >>

4. CONFIGURE KU FOR COMM

GNC 33 REL NAV

CRT INH RNG – ITEM 18 (*)
RDOT – ITEM 21 (*)
Angles – ITEM 24 (*)
KU ANT ENA – ITEM 2 (no *)

A1U KU PWR – STBY
MODE – COMM
√sel – GPC
CNTL – CMD
A2 DIGI-DIS sel – EL/AZ

HOOK
VELCRO

RNDZ-2a/120/O/A

(reduced copy)

TOP
BACK OF ‘KU OPS’

HOOK
VELCRO

HOOK
VELCRO

RNDZ-2b/120/O/A

(reduced copy)

HOOK
VELCRO

APPROACH

RNDZ-3a/120/O/B

CG to CG RNG (ft)	RPM & CONT TORVA RDOT (ft/s)	MC2 ET w/ RPM (h:mm:ss)	DAP	EVENT	NO-RPM RDOT (ft/s)	HHL RNG (ft) (to ISS cg)	Raw TCS RNG* (ft) (Refl #2)
2000	-3.0	0:27:00	A8/B8 AUTO/ VERN (PRI)	If RDOT falls below value for next gate, THC: -Z (in) as reqd to maintain RDOT	-3.0	1990 HHL Report	2015
1700	-2.4	0:29:00			-2.6	1690	1698
1500	-2.1	0:31:00			-2.3	1490	1498
1000	-1.3	0:36:00	LO Z	**MCC UPDATE: Go for RPM, Go to proceed inside 600 ft** If no-go to proceed inside 600 ft, perform CONTINGENCY 600 FT TORVA C	-1.5	990	985
900	-1.1	0:37:00		**If Go for RPM, report to ISS: 10 min to RPM start** F6, A6U ADI ATT - √LVLH	-1.3	890	885
800 700	-0.9 -0.6	0:38:00 0:41:00	A9/B9	A1U KU BD RDR OUTPUT – LOW When in Rbar attitude, config DAP to A9,B9 Null ISS rates in C/L camr **If Go for RPM, perform RPM SETUP A**	↓	790 HHL Report 690	786 686
650	-0.4	0:42:30		**Report to ISS: Range 650 ft**	↓	640	636
620 **600** **580**	**-0.4 < Rdot < -0.3** **-0.3 < Rdot < -0.2** **-0.2 < Rdot < -0.1**			**If Go for RPM** Null Xdot to 0 ± 0.1 ft/sec prior to mnvr start If reqd: stationkeep at 600-620 ft until RPM window opens **Perform RBAR PITCH MNVR B**	-0.8	610 590 570	606 586 566
600 550 500	-0.7 -0.6 -0.4	0:56:00	A9/B9	TORVA GNC UNIV PTG P ITEM 15 + 1 7 9 EXEC TRK – ITEM 19 EXEC (CUR-*) THC: +X (up) as reqd to null tgt motion in C/L camr and initiate flyaround Maintain ISS within C/L camr FOV	-0.8 -0.7 -0.5	590 540 490 HHL Report	586 536 486
400	0.0 to -0.1			RPOP POR – Orb DP to Tgt DP Maintain RNG > 250 ft (DP-DP) until VBAR arrival ISS CG within 10° of C/L camr Start video recorders	0.0 to -0.1	390 HHL Report	343
When Pitch Error < 2°		1:10:00		ESTABLISH VBAR THC: -X (down) as reqd to null ISS in C/L camr, as reqd to maintain ISS in C/L camr FOV		**HHL RNG (to LAB)**	**TCS Refl. 1**
415-315 (350-250 DP-DP)	-0.2	1:10:30		Perform CONFIGURE FOR DOCKING D Perform VBAR APPROACH (Cue Card)	-0.2	357-257 HHL Report	355-255

***** Raw TCS Range assumes ISS in docking attitude

RPM SETUP A
- GNC 20 DAP CONFIG
- A PRI ROT RATE – ITEM 10 + 0.75 EXEC
- A VERN ROT RATE – ITEM 23 + 0.75 EXEC
- A PRI Y OPTION – ITEM 16 EXEC (ALL)
- GNC UNIV PTG
- P – ITEM 15 + 145.0 EXEC
- THC: center Node 1 in centerline camr ± 5 deg
- GNC 33 REL NAV
- INH RNG, RDOT, ANGLES
- A1U KU sel - AUTO TRK

CONTINGENCY 600 FT TORVA C

If Go for RPM, perform nominal RPM actions per APPROACH cue card

Continue APPROACH cue card with the following deltas:
- Initiate TORVA at range 700 ft Rdot -0.3 ft/s (alternate range 650 ft Rdot -0.1 ft/s)
- Maintain RNG > 600 ft (CG-CG) until VBAR arrival
- On VBAR, stationkeep RNG 635-535 (DP-DP), maintain ISS in C/L camr FOV

On MCC GO, perform CONFIGURE FOR DOCKING D and VBAR APPROACH (Cue Card)

RBAR PITCH MNVR B

AFT (FWD) ADI Pitch	DAP/UPTG	**ISS Calls** / Other
P = 90 (0) (Rbar attitude)	A/AUTO/PRI TRK – ITEM 19 EXEC FLT CNTLR PWR – OFF	**Initiating RPM (with mark)**
P = 100 (10)	VERN (PRI)	
P = 170 (80)	FREE P – ITEM 15 + 270 EXEC TRK – ITEM 19 EXEC PRI	
P = 235 (145)		**Start Photos**
P = 305 (215)		**End Photos**
P = 10 (280)	A/AUTO	
P = 90 (0) (mnvr complete)	VERN (PRI) FLT CNTLR PWR – ON THC: set up for TORVA Reload DAP A9	KU SEL – GPC When Lock On Occurs: KU OPS step 3 (cue card)

CONFIGURE FOR DOCKING D
- Perform AIRLOCK FAN ACT AND ODS VOLUME PREP (APDS), 8-10
- Perform DOCKING MECHANISM POWERUP (APDS), 8-5
- Perform DOCKING PREP (APDS), 8-7

RPM START WINDOW (MET)

OPEN: ___ / ___ : ___ : ___

CLOSE: ___ / ___ : ___ : ___

(reduced copy)

TOP
BACK OF 'APPROACH WITH RPM'

HOOK
VELCRO

VBAR APPROACH

RNDZ-3b/120/O/B

Interface RNG (ft)	RDOT (ft/s)	MC2 ET h:mm:ss (doc–PET)	DAP	EVENT	HHL RNG (to US Lab) (ft)	Raw TCS RNG* (Refl #1)
250	-0.20 ±0.05	1:15:00 (-34:00)	√LO Z	**MCC UPDATE: Go for docking** Maintain ISS docking target within 8 deg Corridor	257 HHL Report	255
(170 ± 10) 170	(0.00) -0.20 ±0.05	1: 21:30 (-27:30)	DAP: B	Note: DAP A allowed for ±X and ±Z THC If reqd, THC: as reqd to null Rdot and perform VBAR stationkeeping	177 HHL Report	175
110	-0.15 ±0.05	1:26:30 (-22:30)		Perform CONFIGURE KU FOR COMM (Cue Card, KU OPS)	117	115
75	-0.10 ±0.05	1:30:30 (-18:30)	No LO Z A10,B10 √DAP: B	Note: DAP A allowed for ±X and -Z THC (in) GNC 23 RCS (Maintain through contact) √RCS FWD – ITEM 1 EXEC (*) JET DES F1F – ITEM 31 EXEC (*) F2F – ITEM 35 EXEC (*)	82 HHL Report	80
30 ± 5	0.0	1:38:00 (-11:00)	√A10,B10 √DAP: B	5° Corridor If Flyout Reqd: THC: +Z (out) as reqd to null RDOT Perform AUTO ANGULAR FLYOUT (Cue Card) outside 25 ft Review FAILED CAPTURE, steps 1 thru 3, CAUTION (Cue Card, DOCKING SEQUENCE) √A7L Panel Config Set EVENT TIMER for CAPTURE (counting up from 00:00)	32-42 HHL Report	30-40
30	-0.07 ±0.02	1:43:00 (-06:00)		√5° Corridor THC: as reqd to establish RDOT = -0.07 ± 0.02 fps **Report to MCC and ISS: Initiating final approach**	37	35
25 10	↑ -0.10 ±0.03	1:44:00 (-05:00) 1:47:20 (-01:40)	√No LO Z	Maintain GNC 23 RCS through contact ARM PCT F2(F4) SPDBK/THROT pb – AUTO – √lt on	32 17	30 15
3	-0.10 ±0.03	1:48:30 (-00:30)		Maintain 3 inch lateral alignment cylinder	N/A	8
CONTACT or ~2 in	-0.10 ±0.03	1:49:00 (00:00)	PCT (SPARE pbi)	CAPTURE	N/A	5

* Raw TCS Range assumes ISS in docking attitude

CAPTURE

MS START EVENT TIMER = 00:00:00
A7L √CAPTURE lt – lt on
Notify ISS and MCC-H: "Capture Confirmed"
DISARM PCT:
F4 SPDBK/THROT pb – push (lt off)

√ISS in FREE DRIFT (ISS indicator lights flashing)

* IF NO INDICATION OF ISS FREE *
* DRIFT AT CAPTURE + 65 SEC: *
* Go to FAILED CAPTURE *

When capture confirmed and ISS in FREE
A6U FLT CNTLR PWR – OFF
Perform TCS DEACTIVATION (RNDZ TOOLS), 7-20
Go to DOCKING SEQUENCE (Cue Card)

FAILED CAPTURE

1. APDS CIRC PROT OFF pb – push
√CIRCUIT PROTECT OFF lt – lt on
OPEN LATCHES pb – push
√LATCHES CLOSED lt – lt off
√OPEN lt – lt on

2. √DAP: NO LO Z

* IF VERN FAIL: *
* DAP: PRI *

If petals clear:
DAP: A(B)/LVLH

3. THC: +Z (out) to establish 0.1 fps opening rate
√DAP: B/LVLH
If ISS in FREE DRIFT:
Use ISS CG as corridor reference
Maintain 8 degree corridor
Inform MCC-H and ISS: Failed Capture
Maintain opening rate of at least 0.1 fps

4. Go to VBAR CORRIDOR BACKOUT, CONTINGENCY OPS, 5-12

(reduced copy)

TOP

HOOK
VELCRO

C/L CAMERA TARGET ALIGNMENT (+VBAR)

PITCH (P)
ITEM 15

Target Displaced DOWN
(Cross Displaced UP)

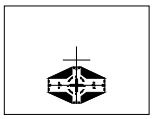

P = _____

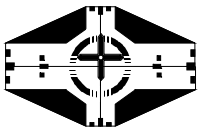

P = _____

3. PITCH = 179 - P=_____(A)
5. PITCH = PITCH - P=_____(D)

Target Displaced UP
(Cross Displaced DOWN)

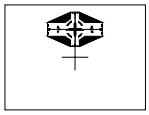

P = _____

P = _____

3. PITCH = 179 + P=_____(A)
5. PITCH = PITCH + P=_____(D)

ROLL (R)
ITEM 16

Rotated CW

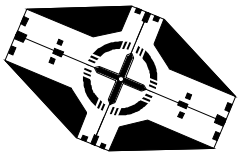

R = _____

R = _____

3. YAW = 360 - R =_____(B)
5. YAW = YAW - R =_____(E)

Rotated CCW

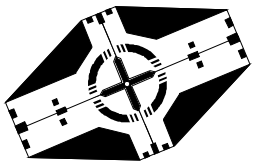

R = _____

R = _____

3. YAW = 0 + R =_____(B)
5. YAW = YAW + R =_____(E)

YAW (Y)
ITEM 17

Target Displaced RIGHT
(Cross Displaced LEFT)

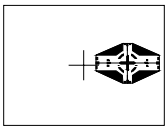

Y = _____

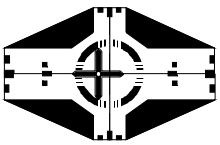

Y = _____

3. OM = 0 + Y =_____(C)
5. OM = OM + Y =_____(F)

Target Displaced LEFT
(Cross Displaced RIGHT)

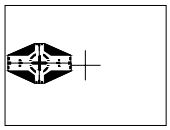

Y = _____

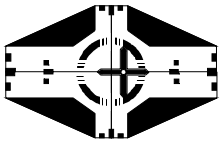

Y = _____

3. OM = 360 - Y =_____(C)
5. OM = OM - Y = _____(F)

RNDZ-4a/120/O/A

(reduced copy)

TOP
BACK OF 'C/L CAMERA TARGET ALIGNMENT (+VBAR)'

HOOK
VELCRO

AUTO ANGULAR FLYOUT

CAUTION
AUTO ANGULAR FLYOUT must be completed by RNG = 10 ft

1. RECORD ANGULAR MISALIGNMENT
   √DAP: A10, B10
   Read error from ISS centerline target
   PITCH _____ (P)
   YAW _____ (Y)
   ROLL _____ (R)
   Report misalignment to MCC
   If all axes within 1.0 deg of zero, no mnvr reqd >>

2. CALCULATE UNIV PTG INPUTS
   Use diagrams in TARGET ALIGNMENT (Cue Card) to determine UNIV PTG inputs for step 3

3. EXECUTE ALIGNMENT MNVR
   GNC UNIV PTG
   √TGT ID +2
   √BODY VECT +5
   PITCH +(A)
   YAW +(B)
   OM +(C)
   TRK – ITEM 19 EXEC (CUR-*)

When mnvr cplt,

4. RECORD REMAINING ANGULAR MISALIGNMENT
   Record error from ISS centerline target:
   PITCH _____ (P)
   YAW _____ (Y)
   ROLL _____ (R)
   If all axes within 1.0 deg of zero, no additional mnvr reqd >>

Otherwise,

5. REPEAT ALIGNMENT
   a. Calculate UNIV PTG inputs:
      Use diagrams in TARGET ALIGNMENT (Cue Card) to determine UNIV PTG inputs for step 5b
   b. Execute alignment MNVR
      GNC UNIV PTG
      √TGT ID +2
      √BODY VECT +5
      PITCH +(D)
      YAW +(E)
      OM +(F)
      TRK – ITEM 19 EXEC (CUR-*)

RNDZ-4b/120/O/A

(reduced copy)

HOOK
VELCRO

DOCKING SEQUENCE

CAUTION
If following failures occur during final approach (< 30 ft), **NO-GO** for docking. Initiate Corridor Backout. Then proceed with APDS OFF-NOMINAL procedures (APDS)

POWER Failed OFF (All STATUS lts OFF)	DAMPING tlm Failed ON
CAPTURE lt Failed ON	FIXERS tlm Failed ON

CAUTION
If any Docking Sequence command occurs out of order or if any STATUS lt functions erroneously:
A7L POWER OFF pb – push
ON pb – push
Proceed with APDS OFF-NOMINAL procedures (APDS)

Event Time

Contact/Capture/Damping

SM 167 DOCKING STATUS

0:00	A7L	1. √CAPTURE lt – lt on (expect RING INITIAL POSITION lt off)
0:05	CRT	2. √DAMPING – ON

Disable and Release Dampers

		3. When no relative motion [PETAL POS BASE (three) not changing for 60 sec]:
	A7L	POWER ON pb – push
	CRT	√DAMPING – OFF
		4. When no relative motion [PETAL POS BASE (three) not changing for 30 sec]:
	A7L	FIXER OFF pb – push
		√FIXERS OFF lt – lt on
0:00		RING IN pb – push
	CRT	√DRV CMD – ON [PETAL POS BASE (three) – decr]
		√CLUTCH – LOCK/blank
0:05	A7L	5. POWER ON pb – push
	CRT	√RING DRV CMD – OFF
		6. On MCC GO [PETAL POS BASE (three) not changing for 30 sec]:
	A7L	APDS CIRC PROT OFF pb – push
		√CIRCUIT PROTECT OFF lt – lt on
0:00		RING OUT pb – push
	CRT	√DRV CMD – ON [PETAL POS BASE (three) – incr]
0:05	A7L	7. POWER OFF pb – push
		ON pb – push
		√FIXERS OFF lt – lt off
	CRT	√RING DRV CMD – OFF

HOOK
VELCRO

Retract Ring

	A7L,CRT	8. On MCC GO (RING ALIGNED lt on and [PETAL POS BASE (three) not changing] for 30 sec):	
0:00	A7L	RING IN pb – push	
	CRT	√DRV CMD – ON [PETAL POS BASE (three) – decr]	
		√FIXERS – ON	
		√CLUTCH – LOCK/blank	
	CRT,A7L	* If PETAL POS BASE (three) > 20 % and RING ALIGNED lt off:	*
	A7L	* POWER ON pb – push	*
		* Wait for ring alignment (up to 30 min)	*
	A7L,CRT	* When RING ALIGNED lt on and [PETAL POS BASE (three)	*
		* not changing] for 30 sec:	*
	A7L	* RING IN pb – push	*
3:15	A7L	9. √READY TO HOOK lt – lt on	
	CRT	√PETAL POS BASE (three) ≤ 7%	

Close Hooks

0:00	A7L	10. √HOOKS 1,HOOKS 2 OPEN lt (two) – lt off	
	CRT	√HK1,HK2 DRV CMD (two) – ON	
		√POS (two) ≥ 5% & incr	
		* If HK1(2) DRV CMD – OFF or HK1(2) POS not incr:	*
	A7L	* CLOSE HOOKS pb – push	*
		* If HOOKS 1(2) CLOSED lt failed ON:	*
		* Perform HOOKS 1(2) CLOSED LT FAILED ON, 8-23	*
0:20	CRT	11. √RING DRV CMD – OFF	
		* If RING DRV CMD – ON 20 sec after hooks begin	*
		* driving in step 10:	*
	A7L	* POWER ON pb – push	*
≤ 1:30	A7L	12. √INTERF SEALED lt – lt on (expect intermittent lt initially)	
2:20		13. √HOOKS 1,HOOKS 2 CLOSED lt (two) – lt on	
	CRT	√HK1,HK2 POS (two) = 92 - 93%	
		√IND (two) – blank/CL	
		√ODS INDIV HK CL (twelve) – CL	

Load Relieve Capture Latches (Extend Ring)

	A7L	14. APDS CIRC PROT OFF pb – push
		√CIRCUIT PROTECT OFF lt – lt on
0:00		15. RING OUT pb – push
	CRT	√DRV CMD – ON
0:10	A7L	16. POWER ON pb – push
	CRT	√RING DRV CMD – OFF

Open Capture Latches

0:00	A7L	17. OPEN LATCHES pb – push
		√LATCHES CLOSED lt – lt off
0:05		√OPEN lt – lt on

Retract Ring to FNL POS

0:00		18. RING IN pb – push
	CRT	√DRV CMD – ON [PETAL POS BASE (three) – decr]
		√FIXERS – ON
0:10	A7L	√FINAL POSITION lt – lt on
	CRT	√PETAL POS BASE (three) = 5 ± 3%
0:20		√RING DRV CMD – OFF

Power Off

	A7L	19. POWER OFF pb – push
		√STATUS lt (eighteen) – lt off
		20. Go to TERMINATE RNDZ OPS 22A, 4-22 >>

(reduced copy)

HOOK
VELCRO

STOPWATCH RDOT CONVERSION

TIME BETWEEN 1 FT MARKS (SEC)	RANGE RATE (FT/SEC)
2	0.50
3	0.33
4	0.25
5	0.20
5.5	0.18
6	0.17
6.5	0.15
7	0.14
7.5	0.13
8	0.125
8.5	0.12
9	0.11
10	0.10
11	0.09
12	0.08
13	0.075
14	0.07
15	0.067
16	0.063
18	0.056
20	0.050

NOTE

HHL SPECS state that the HHL will not work if the aimpoint surface is closer than 12 ft from the HHL unit; therefore, no HHL use should be expected at an HHL range less than 12 ft (5 ft interface-to-interface)

RNDZ-6a/120/O/A

TOP
BACK OF 'STOPWATCH RDOT CONVERSION'

HOOK
VELCRO

RDOT vs DELTA RNG/DELTA TIME

Rdot (fps)														
ΔRng (ft) / ΔT (m:ss)	1000	800	700	600	500	400	300	250	200	150	100	50	25	10
0:45						8.9	6.7	5.6	4.4	3.3	2.2	1.1	0.56	0.22
0:50					10.0	8.0	6.0	5.0	4.0	3.0	2.0	1.0	0.50	0.20
0:55					9.1	7.3	5.5	4.5	3.6	2.7	1.8	0.91	0.45	0.18
1:00				10.0	8.3	6.7	5.0	4.2	3.3	2.5	1.7	0.83	0.42	0.17
1:10			10.0	8.6	7.1	5.7	4.3	3.6	2.9	2.1	1.4	0.71	0.36	0.14
1:20		10.0	8.8	7.5	6.3	5.0	3.8	3.1	2.5	1.9	1.3	0.63	0.31	0.13
1:30		8.9	7.8	6.7	5.6	4.4	3.3	2.8	2.2	1.7	1.1	0.56	0.28	0.11
1:40	10.0	8.0	7.0	6.0	5.0	4.0	3.0	2.5	2.0	1.5	1.0	0.50	0.25	0.10
1:50	9.1	7.3	6.4	5.5	4.5	3.6	2.7	2.3	1.8	1.4	0.91	0.45	0.23	0.09
2:00	8.3	6.7	5.8	5.0	4.2	3.3	2.5	2.1	1.7	1.3	0.83	0.42	0.21	0.08
2:20	7.1	5.7	5.0	4.3	3.6	2.9	2.1	1.8	1.4	1.1	0.71	0.36	0.18	0.07
2:40	6.3	5.0	4.4	3.8	3.1	2.5	1.9	1.6	1.3	0.9	0.63	0.31	0.16	0.06
3:00	5.6	4.4	3.9	3.3	2.8	2.2	1.7	1.4	1.1	0.8	0.56	0.28	0.14	0.06

NOTE:
If RPOP is available, use RPOP
subtended angle function

TIME	DELTA TIME	RANGE	DELTA RANGE

RNDZ-6b/120/O/A

HOOK VELCRO

GPC/MDM FAILURE RESPONSE DURING RNDZ

HOOK VELCRO

NOTES

1. Perform appropriate ORB PKT procedure in parallel with IMMEDIATE ACTIONS on card as soon as practical
2. Use this card during Rndz T/L thru MC4 burn (if RR FAIL PROCEDURES, thru RR fail correction burn)
3. GPC assignments assume 1233 NBAT
4. Do NOT restring for Non-Universal I/O Errors. Otherwise, a restring for GPC 1,2,3 fails will recover everything (see expected restring below)
5. If any GNC GPC fails, VERNs ↓
6. If IMUs not commfaulted, THCs are normally GO
7. Loss of FF2, FF4, FA3, and FA4 do not impact Rndz (unless other failures)

GPC	MDM	IMMEDIATE ACTION	MAJOR IMPACT
GPC1 (3232*)	**FF1**	1. If -Z ST NAV, INH ST to NAV 2. If -Z ST not recovered: Use -Y ST, if reqd	1. C3 DAP lights latched (go out with MDM pwr fail) 2. -Z ST ↓
	FA1	DAP: ALT/AUTO	VERNs ↓
GPC2 (1313*)	**FA2**	DAP: ALT/AUTO	VERNs ↓
Man OMS Shutdown **GPC3** (1212*) **Loss of Aft DAP**	**FF3**	1. DAP: ALT/AUTO 2. If RR NAV, INH RR to NAV 3. If -Y ST NAV, INH ST to NAV 4. If RR not recovered: Work RR FAIL procedures	1. VERNs ↓ 2. RR → NAV/RPOP ↓ (Panel A2 OK) 3. A6 DAP lights latched (go out with MDM pwr fail) 4. -Y ST ↓ 5. Also for loss of GPC3: R OMS GMBL PRI/SEC ↓
GPC4 (1212*)	**PL**	If Ku breaks lock: Ku sel – AUTO TRK	1. GPC Ku ptg ↓, slew in AUTO TRK if Ku breaks lock 2. No Ku self-test

* Expect this NBAT if GPC fail

MALFUNCTION	>>

RNDZ-7a/120/O/B

TOP
BACK OF 'GPC/MDM FAILURE RESPONSE DURING RNDZ'

HOOK VELCRO

RNDZ REF DATA

HOOK VELCRO

FF1
F MANF 1 JETS
C3 DAP LTS
IMU 1
-Z STRK
L OMS GMBL PRI ENA
L ADI sw, ATT REF
F,A THC contact 1
L,A RHC channel 1
PNL O3 F,L,R RCS OX QTY
PNL O3 F,L RCS LOW QTY

FF2
F MANF 2 JETS
IMU 2
L OMS GMBL SEC ENA
R ADI sw, ATT REF
F,A THC contact 2
A RHC P,Y channel 2
L RHC channel 2
R RHC channel 1

FF3
VERNS
F MANF 4 JETS
A6 DAP LTS
IMU 3
RR→ NAV/RPOP
-Y STRK
R OMS GMBL SEC ENA
A ADI sw, ATT REF
F,A THC contact 3
L,A RHC channel 3
R RHC channel 2
PNL O3 R RCS LOW QTY
PNL O3 F,L,R RCS FU QTY

FF4
F MANF 3 JETS
R OMS GMBL PRI ENA
A RHC Roll channel 2
R RHC channel 3

PL1
GPC KU PTG
KU self-test

FA1
VERNS
L,R MANF 1 JETS
L OMS GMBL PRI

FA2
VERNS
L,R MANF 3 JETS
L OMS GMBL SEC

FA3
L,R MANF 2 JETS
R OMS GMBL SEC

FA4
L,R MANF 4 JETS
R OMS GMBL PRI

MDM OA1(OA2)
L(R) OMS DEORB ONLY

DSC OF2
VERNS & F MANF 3,4 RM
F RCS OX, FU QTY

DSC OF4
F MANF 1,2 RM

DSC OL1
VERNS & L MANF 1,2 RM
L OMS DEORB ONLY
L RCS OX QTY

DSC OL2
LMANF 3,4 RM
L RCS FU QTY

DSC OR1
VERNS & R MANF 1,2 RM
R OMS DEORB ONLY
R RCS OX QTY

DSC OR2
R MANF 3,4 RM
R RCS FU QTY

DSC OA2
VERNS RM

CNTL AB1
PLB LTS (Fwd-P, Aft-S, Bulkhead)
L ADI ATT REF
CCTV CONTR UNIT PRI

CNTL BC1
VERNS
PLB LTS (Fwd-S, Mid-P)
R ADI ATT REF
CCTV CONTR UNIT SEC

CNTL CA1
PLB LTS (Aft-P, Mid-S)
OVHD DOCK, RMS SPOT LTS
A ADI ATT REF

CNTL AB2
F MANF 1 JETS
L ADI switches, ATT REF

CNTL BC2
VERNS
F MANF 2 JETS
A6 DAP ROT,TRANS pbs (PCT)
R ADI switches, ATT REF

CNTL CA2
F MANF 3 JETS
A6 DAP ROT,TRANS pbs (PCT)
A ADI switches, ATT REF

CNTL AB3
C3 DAP ROT,TRANS pbs

CNTL BC3
C3 DAP ROT,TRANS pbs

CNTL CA3
F MANF 4 JETS

MAIN A
FPC1: MCIU
FLC1: F MANF 1 JETS
AC1B: PNL O3 RCS/OMS QTY
FWD EVENT TIMER
APC4:
APC1: VERNS
L OMS GMBL PRI
R OMS GMBL SEC
ALC1: VERNS
O14: -Z STRK
AFT EVENT TIMER
O14/A8: RMS PRI PWR

R14: CCTV CAM-C,D
CCTV MON-1
CCTV CONTR UNIT PRI
MPC1: APDS RING DAMP 1,2
APDS HK, RING MTR 1
RMS PRI PWR
OVHD DOCK, RMS LTS
PLB LTS (Fwd-P, Aft-S)

MAIN B
FPC2:
FLC2: F MANF 2 JETS
AC2C: PNL A2 DIGITALS
APC5:
APC2: VERNS
LOMS GMBL SEC
ALC2: VERNS
O15: -Y STRK
FWD EVENT TIMER
O15/A8: RMS B/U PWR
R14: KU COMM & RR
CCTV CAM-A, RMS
CCTV MON-2
CCTV CONTR UNIT SEC
VPU (C/L CAM CMDS)
MPC2: KU COMM & RR
APDS RING DAMP 3
APDS HK, RING MTR 2
RMS B/U PWR
PLB LTS(Fwd-S, Mid-P, Bulkhead)
AUX PL B: TCS

MAIN C
FPC3: KU COMM & RR
FLC3: VERNS
F MANF 4 JETS
AC3A: COAS PWR
APC6:
APC3: R OMS GMBL PRI
O16: PNL O3 OMS/RCS QTY
R14: KU SIG PROC (RR OK)
CCTV CAM-B
CABIN TV UTIL PORT
MPC3: PLB LTS (Aft-P, Mid-S)

ESS 2CA
TCS

CABIN PL (Flt Specific)
CCTV C/L CAM

RNDZ-7b/120/O/A

Note: Fabricate As Transparency

C/L CAMERA **CORRIDOR AND ALIGNMENT**

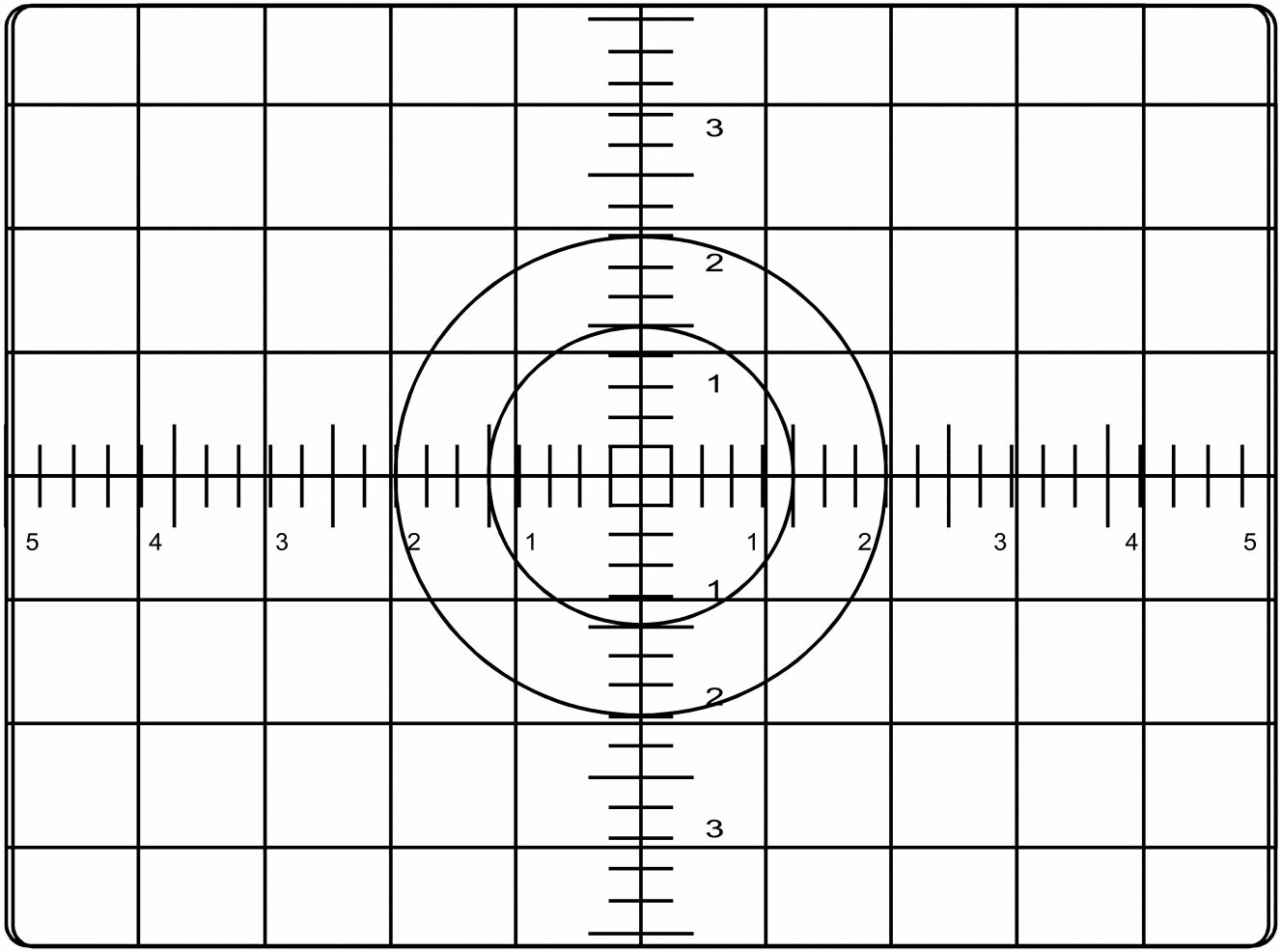

CTVC 40.0 DEG HFOV - CORRIDOR
CTVC FULL ZOOM - ALIGNMENT

RNDZ-8a/120/O/A

(reduced copy)

Note: Fabricate As Transparency

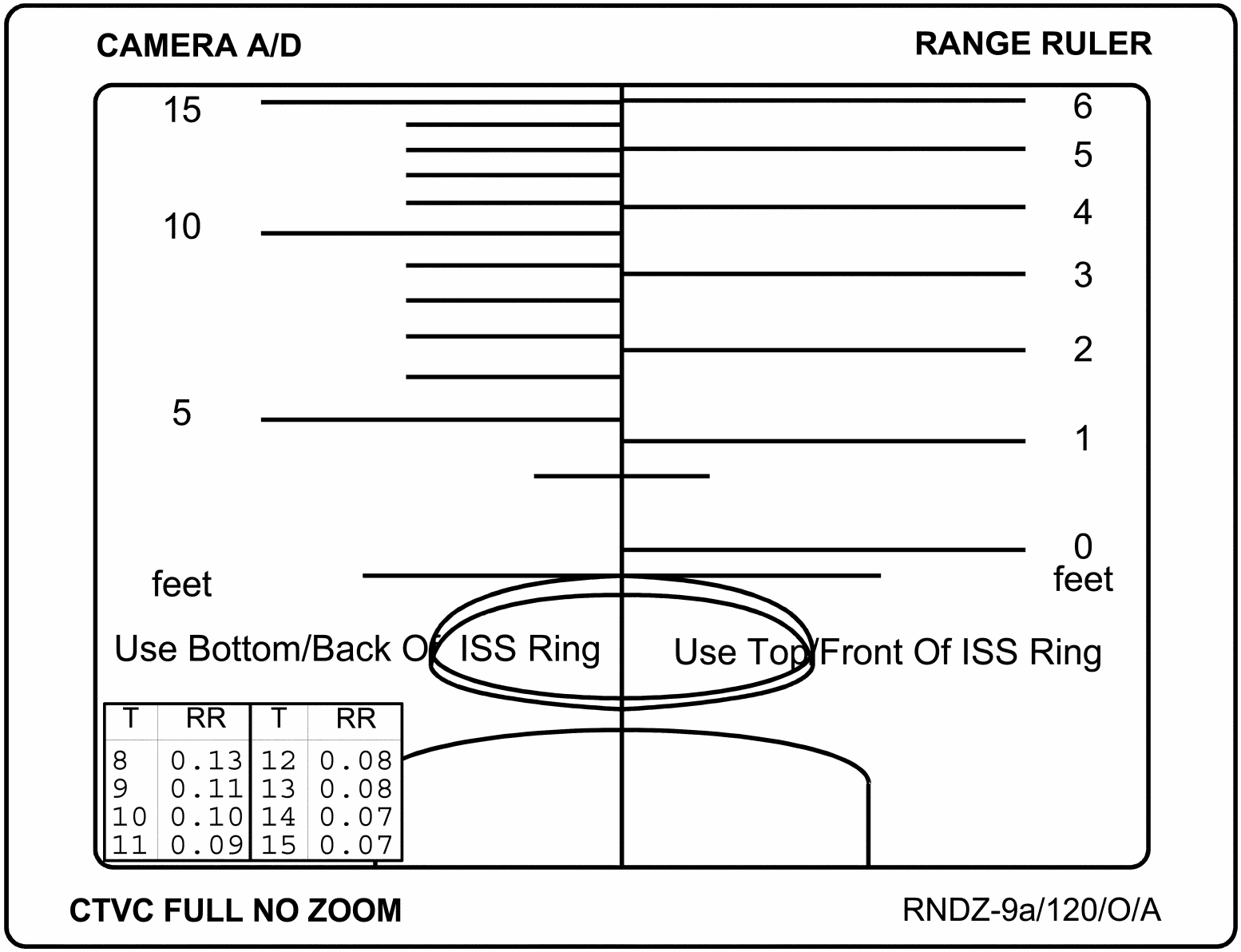

T	RR	T	RR
8	0.13	12	0.08
9	0.11	13	0.08
10	0.10	14	0.07
11	0.09	15	0.07

(reduced copy)

Note: Fabricate As Transparency

C/L CAMERA

ZOOM CALIBRATION (RING READY FOR DOCK)

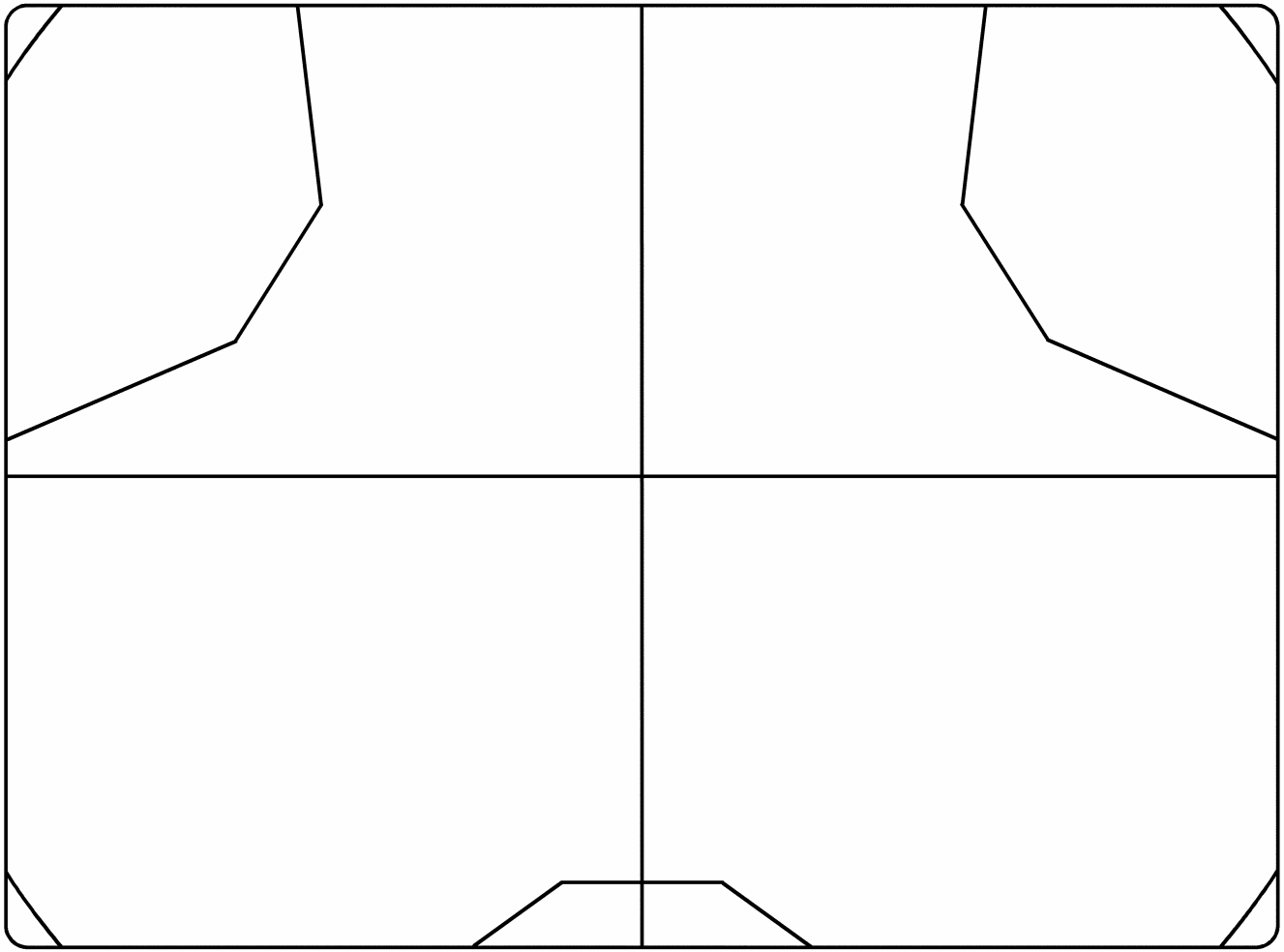

CTVC AT HFOV = 40.0 DEG

RNDZ-10a/120/O/A

(reduced copy)

760 PGSC DISPLAY OF C/L CAMERA CORRIDOR AND ALIGNMENT

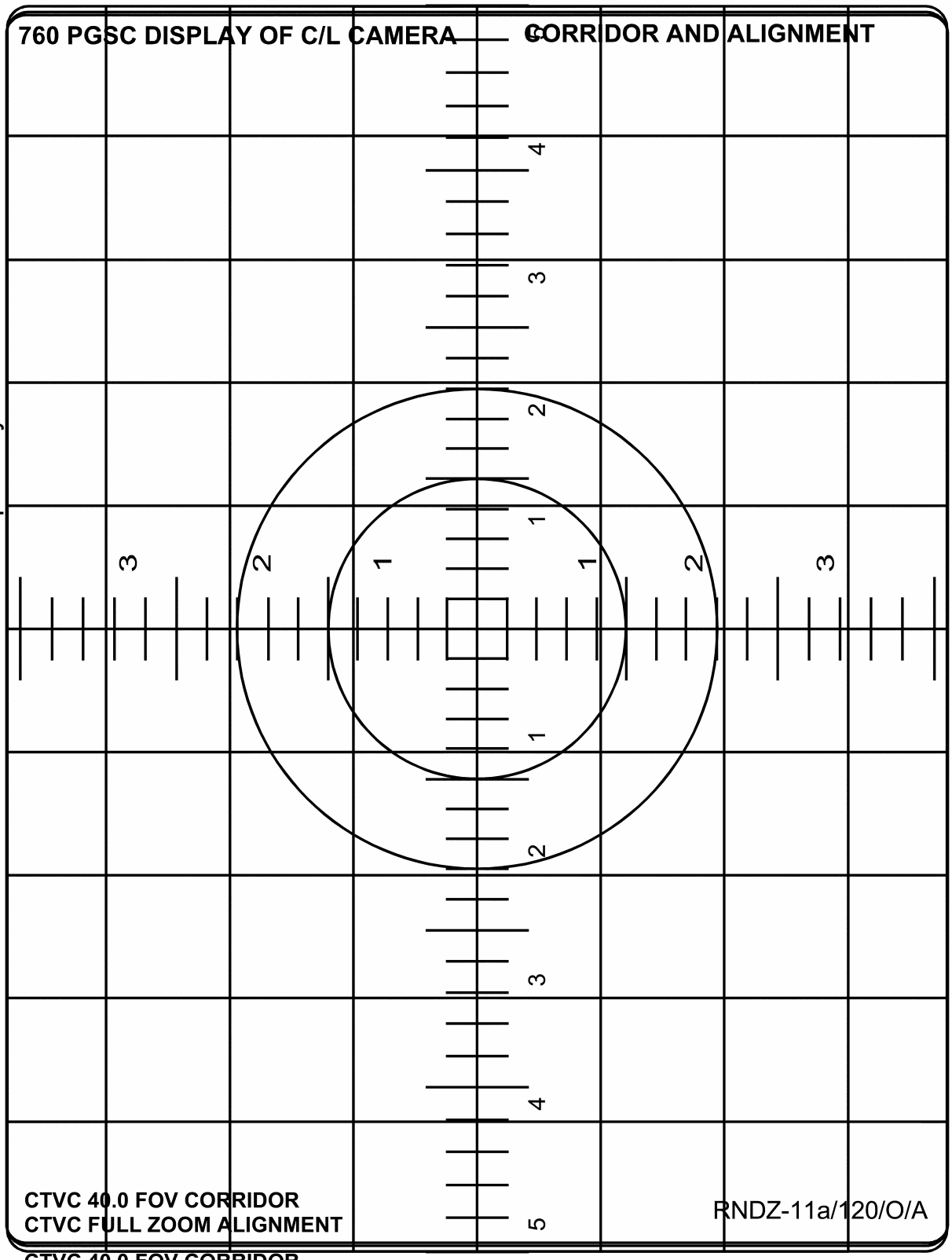

CTVC 40.0 FOV CORRIDOR
CTVC FULL ZOOM ALIGNMENT
RNDZ-11a/120/O/A

(reduced copy)

Note: Fabricate As Transparency

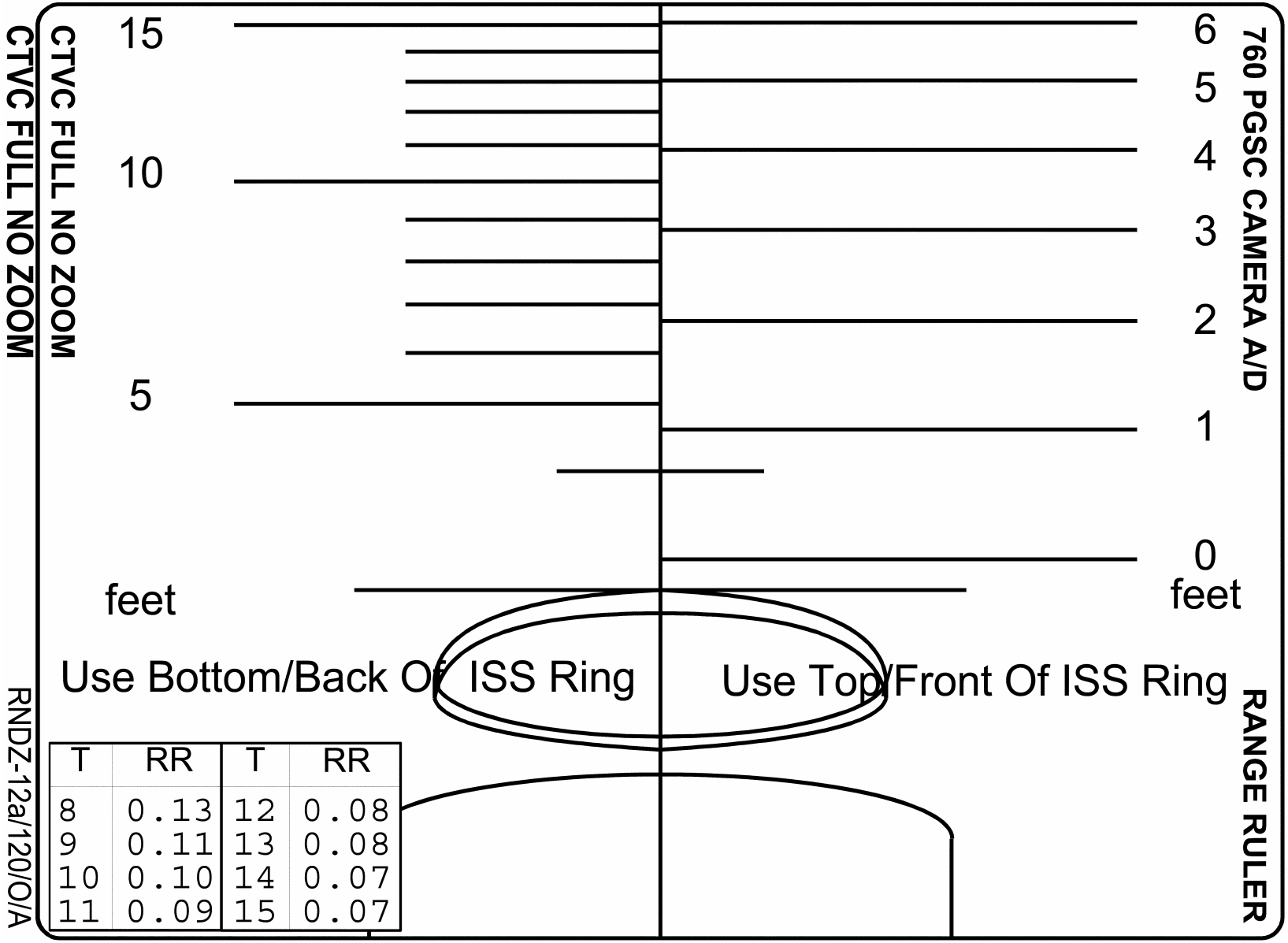

T	RR	T	RR
8	0.13	12	0.08
9	0.11	13	0.08
10	0.10	14	0.07
11	0.09	15	0.07

(reduced copy)

FLIGHT **SUB ANG RULER**

H-FOV

40 deg

20 deg

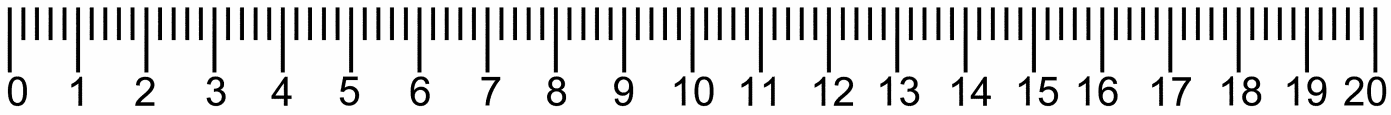

10 deg

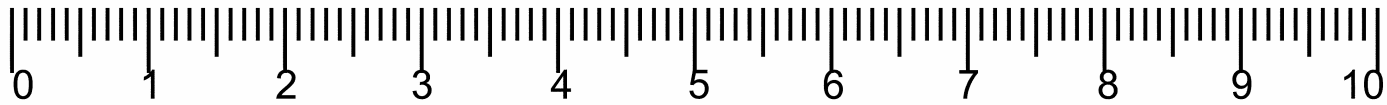

RNDZ-13a/120/O/A

(reduced copy)

Note: Fabricate As Transparency

RNDZ-14a/120/O/A

V10 MONITOR **CORRIDOR**

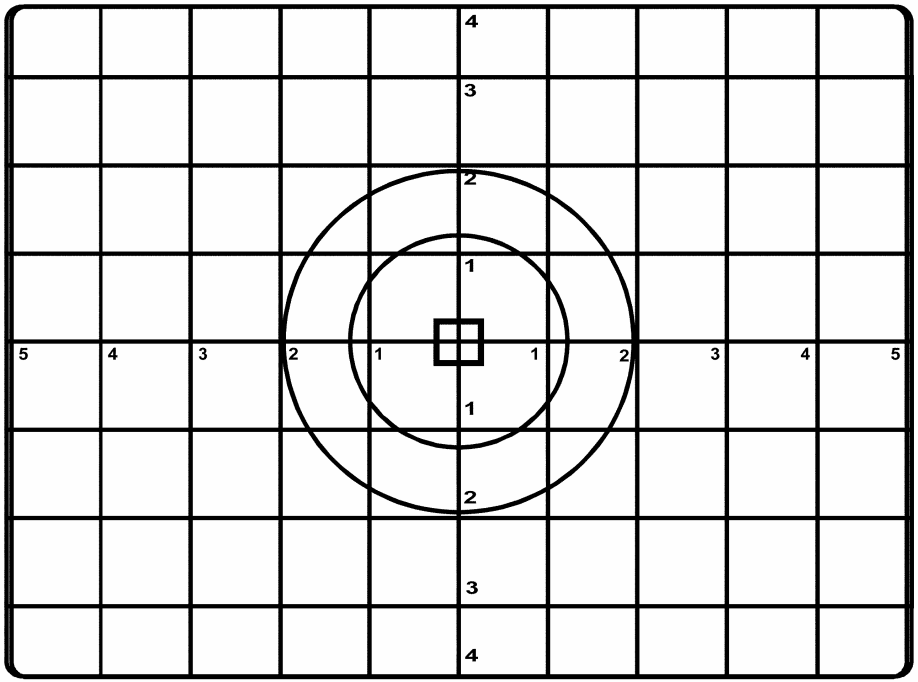

CTVC 40.0 DEG HFOV - CORRIDOR
CTVC FULL ZOOM - ALIGNMENT

A31P PGSC DISPLAY OF C/L CAMERA CORRIDOR AND ALIGNMENT

A31P PGSC DISPLAY OF C/L CAMERA CORRIDOR AND ALIGNMENT

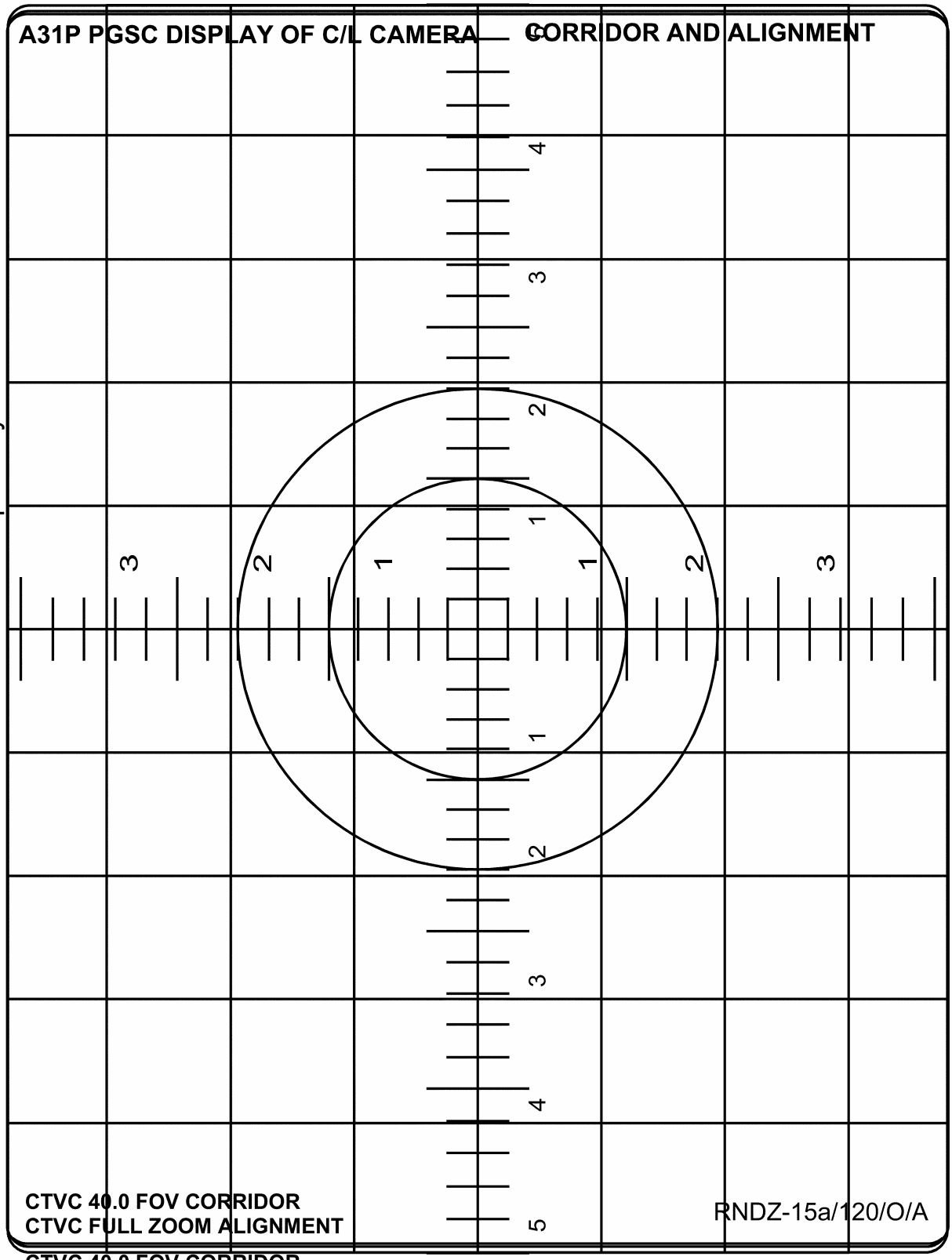

Note: Fabricate As Transparency

CTVC 40.0 FOV CORRIDOR
CTVC FULL ZOOM ALIGNMENT

RNDZ-15a/120/O/A

CTVC 40.0 FOV CORRIDOR
CTVC FULL ZOOM ALIGNMENT

RNDZ-15a/120/O/A

(reduced copy)

Note: Fabricate As Transparency

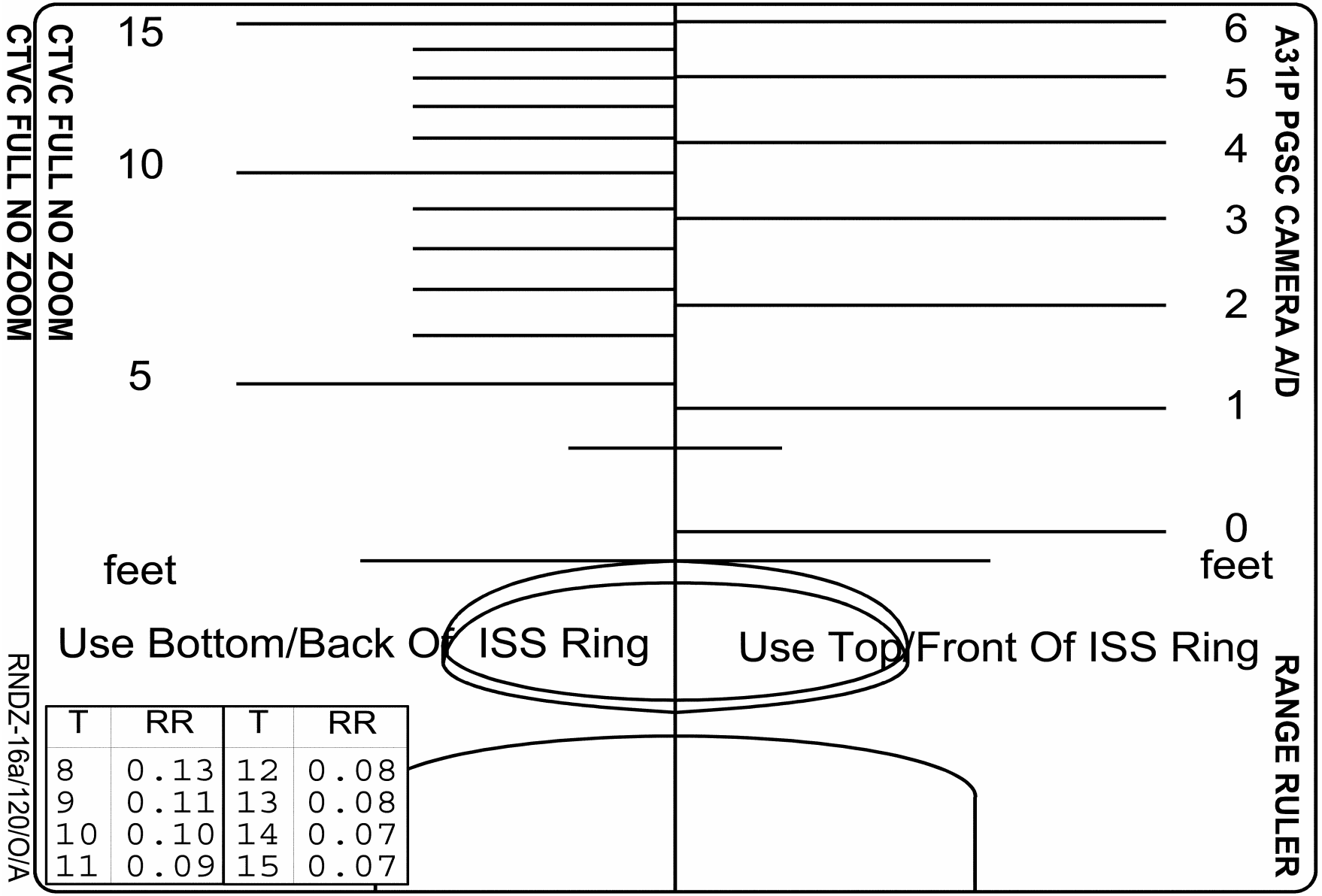

T	RR	T	RR
8	0.13	12	0.08
9	0.11	13	0.08
10	0.10	14	0.07
11	0.09	15	0.07

RNDZ-16a/120/O/A

(reduced copy)

This Page Intentionally Blank

HOOK VELCRO

HOOK VELCRO

RCS FAILURE RESPONSE DURING PROX OPS

Note 1: Use this card during Rndz T/L after MC4 burn (if RR FAIL PROCEDURES, after RR fail correction burn) Note 2: If multiple cases apply, perform cases in order Note 3: Perform appropriate ORB PKT procedure in parallel with IMMEDIATE ACTIONS on card as soon as practical		FLT RULES	
CASE	IMMEDIATE ACTIONS/PROCEDURES REFERENCE	RPM	R<250
2FxD	* **DO NOT PERFORM LOW Z +Z (BRAKING) PULSES** * * If during RPM, * * | DAP: FREE * * | FLT CNTLR PWR – OFF * * |√MCC for further actions * * If on Vbar and RNG > 75 ft, * * | DAP: No LOW Z * * | DAP: B/VERN(PRI) * * |√DAP: AUTO * * | THC: +Z (out) at 10 sec intervals as reqd to * * | establish 0.1 fps opening * * If RNG < 75 ft, * * √DAP: No LOW Z * * DAP: B/VERN(PRI) * * √DAP: AUTO * * THC: +Z (out) as reqd to establish 0.1 fps opening * Do not perform PCT NOTE: DAP disables ±Y translation Perform LOSS OF BOTH FxD JETS (SAME SIDE) (CONTINGENCY OPS), 5-39	**NO-GO**	**NO-GO**
VERN	DAP: PRI/AUTO Perform LOSS OF VRCS (CONTINGENCY OPS), 5-41	GO	GO
Y	NOTE: DAP disables ±Y translation Perform LOSS OF FORWARD SIDE-FIRING JETS (CONTINGENCY OPS), 5-37	**NO-GO**	**NO-GO**
+X	Do not perform LOW Z +Z (braking) pulses Perform DEGRADED +X TRANSLATION (CONTINGENCY OPS), 5-35	**NO-GO**	GO
-X	Perform DEGRADED -X TRANSLATION (CONTINGENCY OPS), 5-36	GO	GO
1FxD	Review IMMEDIATE ACTIONS for 2FxD CASE Perform LOSS OF ONE FxD JET (CONTINGENCY OPS), 5-38	**NO-GO**	GO

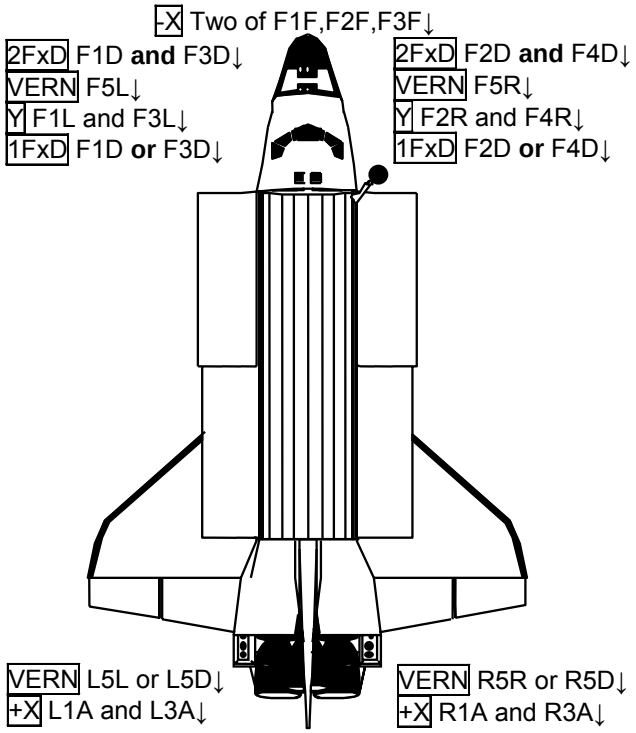

RNDZ-17a/120/O/B

TOP
BACK OF 'RCS FAILURE RESPONSE DURING PROX OPS'

HOOK VELCRO

HOOK VELCRO

RCS/DPS/EPS FAILURE IMPACTS

DPS		FRCS JET GROUPS								EPS				
GPC	MDM	1	2	3	4	5	6	VERNS		DC SUBBUS		MAIN	CNTL	
	FF1	F1F	F1L		F1U		F1D			FLC1	FPC1	MN A DA1	AB2	
	FF2	F2F		F2R	F2U	F2D				FLC2	FPC2	MN B DA2	BC2	
	FF3							F5L	F5R	FLC3	FPC3	MN C DA3		BC1
				F4R		F4D							CA3	
	FF4	F3F	F3L		F3U		F3D			N/A REDUNDANT POWER			CA2	
CASE	1 JET↓					1FxD	1FxD	VERN	VERN	1 JET↓	CASE			
	2 JETS↓	-X	Y	Y		2FxD	2FxD			2 JETS↓				

DPS		ARCS JET GROUPS										EPS				
GPC	MDM	7	8	9	10	11	12	13	14	VERNS		DC SUBBUS		MAIN	CNTL	
	FA1	R1A	L1A	L1L	R1R	L1U	R1U					N/A REDUNDANT POWER				
										L5L	L5D	APC1	APC4	MN A DA1	BC1	BC2
												ALC1				
	FA2									R5R	R5D	APC2	APC5	MN B DA2		
												ALC2				
		R3A	L3A	L3L	R3R			L3D	R3D			N/A REDUNDANT POWER				
	FA3			L2L	R2R	L2U	R2U	L2D	R2D							
	FA4			L4L	R4R	L4U	R4U	L4D	R4D							
CASE	1 JET↓									VERN	VERN	1 JET↓	CASE			
	2 JETS↓	+X	+X									2 JETS↓				

1. For RCS failures, strike aff jet(s). For DPS/EPS failures, strike all jets in same row(s) as aff GPC/MDM/bus
2. For each group with failed jet(s), read down to 1 JET↓ or 2 JETS↓ as appropriate to determine applicable case
3. Refer to reverse side for appropriate procedures and flight rule impacts for each applicable case
4. If 1 JET↓, read down to 2 JETS↓ to determine case for next worse failure, then read back up to determine which RCS/DPS/EPS failures can result in next worse failure. Review IMMEDIATE ACTIONS for next worse failure

RNDZ-17b/120/O/A

Space Shuttle Program
FLIGHT DATA FILE

JSC-48072-120
FINAL

RENDEZVOUS

STS
120

Flight Cover (trim bottom to expose tabs)