Space Shuttle Program
FLIGHT DATA FILE

JSC-48033

Orbit Pocket Checklist

Mission Operations Directorate
Operations Division

Generic, Rev M
October 18, 2006

NOTE
For STS-116 and subsequent flights

AESP:	MM101
APCL:	MM104
OPCL:	MM106
EPCL:	MM301
AESP:	MM304

National Aeronautics and
Space Administration

Lyndon B. Johnson Space Center
Houston, Texas

United Space Alliance

Verify this is the correct version for the pending operation (training, simulation or flight).
Electronic copies of FDF books are available. URL: http://mod.jsc.nasa.gov/do3/FDF/index.html

ORBIT POCKET CHECKLIST	GENERIC, Rev M (Oct 18, 2006)

PCN-4 (Sept 26, 2007) Sheet 1 of 1

List of Implemented Change Requests (482s):

MULTI-1803

NOTE
For STS-120 and subsequent flights

Incorporate the following:

1. Replace v and vi
2. Replace 4-13 and 4-14
   Delete TEMP 4-13 and TEMP 4-14

Prepared by: Mary Ellen Bruce
Publication Manager

Approved by: Kimberly Johnson
Manager, Shuttle Procedures Management

Accepted by: Michael E. Shaw
FDF Manager

Encl: 4 pages

File this PCN immediately behind the front cover as a permanent record

ORBIT POCKET CHECKLIST	GENERIC, Rev M (Oct 18, 2006)

PCN-3 (Sept 20, 2007) Sheet 1 of 1

List of Implemented Change Requests (482s):

MULTI-1798

OPCL-0494
OPCL-0497A
OPCL-0498
OPCL-0499
OPCL-0500
OPCL-0501

NOTE
For STS-120 and subsequent flights

Incorporate the following:

1. Replace v thru viii, xi and xii
2. Replace 4-17 thru 4-24
3. Replace A10-23 and A10-24, A10-29 and A10-30, A10-35 and A10-36, A10-39 and A10-40, A10-43 and A10-44, A10-47 and A10-48, A10-61 and A10-62, A10-71 and A10-72
4. Replace B10-23 and B10-24, B10-29 and B10-30, B10-35 and B10-36, B10-39 and B10-40, B10-43 and B10-44, B10-47 and B10-48, B10-61 and B10-62, B10-71 and B10-72
5. Replace 11-7 and 11-8

Prepared by: Mary Ellen Sruca
Publication Manager

Approved by: Kimberly Johnson
Manager, Shuttle Procedures Management

Accepted by: Michael E. Shaw
FDF Manager

Encl: 48 pages

File this PCN immediately behind the front cover as a permanent record

PAGE CHANGE NOTICE

ORBIT POCKET CHECKLIST	GENERIC, Rev M (Oct 18, 2006)

PCN-2 (July 16, 2007) Sheet 1 of 1

List of Implemented Change Requests (482s):

MULTI-1738A(R)	OPCL-0492
MULTI-1785	OPCL-0493
MULTI-1786	OPCL-0495
MULTI-1790	OPCL-0496
MULTI-1792	

NOTE
For STS-118 and subsequent flights

R – Remainder

Incorporate the following:

1. Replace v thru x
2. Replace 1-3 and 1-4
3. Replace B4-1 and B4-2, 4-5 thru B4-8 (6 pages), 4-21 thru 4-24
4. Replace 5-1 thru 5-4, 5-7 and 5-8
5. Replace A10-61 and A10-62
6. Replace B10-61 and B10-62, B10-73 thru B10-80

Prepared by: Mary Ellen Bruce
Publication Manager

Approved by: Kimberly Johnson
Manager, Shuttle Procedures Management

Accepted by: Michael Tate
FDF Manager

Encl: 38 pages

File this PCN immediately behind the front cover as a permanent record

ORBIT POCKET CHECKLIST	GENERIC, Rev M (Oct 18, 2006)

PCN-1 (Feb 7, 2007) Sheet 1 of 1

List of Implemented Change Requests (482s):

MULTI-1756
MULTI-1769
MULTI-1774

NOTE
For STS-117 and subsequent flights

Incorporate the following:

1. Replace v thru x
2. Replace 4-13 and 4-14
   After 4-14, add TEMP 4-13 and TEMP 4-14
3. Replace A10-27 and A10-28
4. Replace B10-27 and B10-28

Prepared by: Mary Ellen Bruce
Publication Manager

Approved by: Timberly Johnson
Manager, Shuttle Procedures Management

Accepted by: Michael E. Shaw
FDF Manager

Encl: 14 pages

File this PCN immediately behind the front cover as a permanent record

JSC-48033

MISSION OPERATIONS DIRECTORATE

ORBIT POCKET CHECKLIST

GENERIC, REVISION M
October 18, 2006

PREPARED BY:

Mary Ellen Bruce

Mary E. Bruce
Publication Manager

APPROVED BY:

Tonya Vaughan for

Kimberly A. Johnson
Manager, Shuttle
Procedures Management

ACCEPTED BY:

Michael T. Hurt
FDF Manager

This document is under the configuration control of the Crew Procedures Control Board (CPCB). All proposed changes must be submitted via FDF Workflow Crew Procedure Change Request (CR) to DO3/FDF Manager.

Additional distribution of this book, for official use only, may be requested in writing to DO3/PMO Administrator. The request must include justification and requester's name, organization, position, and phone number. Contractor requests are made through the NASA or DOD organization supported. Deletions, reduction in quantity, or change of address may be submitted to DO3/FDF Management Office, 281-244-1184.

Incorporates the following:		
482#:	MULTI-1755	OPCL-0489A
	MULTI-1763	OPCL-0490A
	MULTI-1766	OPCL-0491
	MULTI-1768	

AREAS OF TECHNICAL RESPONSIBILITY

Publication Manager	DO35/M. Bruce	281-483-6083
Alternate	DO35/C. Pierce	281-483-6087
APU/HYD	DF5/J. Jason	281-483-7575
COMM	DF2/J. McKinnie	281-483-0792
DPS	DF3/J. McDonald	281-483-0793
ECLS	DF8/D. Fasbender	281-483-7857
EPS	DF7/M. Friant	281-483-0682
GNC	DF6/D. Gruber	281-483-0709
OMS/RCS	DF6/T. Campa	281-244-1002
MPS	DF5/M. Patel	281-244-0083
PWRDN	DF7/M. Friant	281-483-0682

NOTES

1. The pocket checklists contain contingency procedures to safe a system and continue the flight. Normally, these procedures do not troubleshoot a malfunction to determine its cause.

2. The absence of a procedure implies no immediate action required. The crewmember should proceed to the MAL book as soon as practical.

3. The Orbit Pocket Checklist is generally constrained to include only those procedures that can and must be performed within 5 minutes. All procedures should be completed promptly in the step sequence noted. For longer or less time-critical procedures during the orbit phase, the Malfunction Procedures (MAL) book is available.

4. The procedures in this book are in effect from MM106 transition until transition to MM301 for deorbit.

5. During all on-orbit OMS burns (from TIG-2 min to achievement of required velocity), appropriate OMS and related critical malfunction symptoms and response data are covered by cue cards. For all other on-orbit time periods, OMS procedures contained in this document apply.

6. Critical malfunction symptoms and response data for other orbiter systems are handled by cue cards (if existing), otherwise by procedures included herein.

7. Applicable procedures from the PL PWR book (i.e., Sections 2 and 3) are placed at the end of the flight copies of this book.

8. The '♦' icon preceding a procedural entry indicates one should √MCC and if no comm continue with the procedure.

This Page Intentionally Blank

LIST OF EFFECTIVE PAGES

GENERIC	04/07/87	PCN-4	09/26/07
REV M	10/18/06		
PCN-1	02/07/07		
PCN-2	07/16/07		
PCN-3	09/20/07		

Sign Off ..... *	ALL/GEN M	3-13.....	ALL/GEN M
ii ..... *	ALL/GEN M	3-14.....	ALL/GEN M
iii..... *	ALL/GEN M	A4-1	3,4/GEN M
iv ..... *	ALL/GEN M	A4-2	ALL/GEN M
v ..... *	ALL/GEN M,4	B4-1	5/GEN M,2
vi ..... *	ALL/GEN M,2	B4-2	ALL/GEN M
vii ..... *	ALL/GEN M,3	4-3.....	ALL/GEN M
viii..... *	ALL/GEN M,3	4-4.....	ALL/GEN M
ix ..... *	ALL/GEN M,2	4-5.....	ALL/GEN M
x ..... *	ALL/GEN M	4-6.....	ALL/GEN M,2
xi ..... *	ALL/GEN M	A4-7	ALL/GEN M,2
xii ..... *	ALL/GEN M,3	A4-8	ORB/GEN M
xiii..... *	ALL/GEN M	B4-7	ALL/GEN M,2
xiv ..... *	ALL/GEN M	B4-8	SHM/GEN M
1-1.....	ALL/GEN M	4-9.....	ALL/GEN M
1-2.....	ALL/GEN M	4-10.....	ALL/GEN M
1-3.....	ALL/GEN M,2	A4-11	ALL/GEN M
1-4.....	ALL/GEN M	A4-12	3,4/GEN M
2-1.....	ALL/GEN M	B4-11	ALL/GEN M
2-2.....	ALL/GEN M	B4-12	5/GEN M
2-3.....	ALL/GEN M	4-13.....	ALL/GEN M
2-4.....	ALL/GEN M	4-14.....	ALL/GEN M,4
3-1.....	ALL/GEN M	TEMP 4-13.....	deleted
3-2.....	ALL/GEN M	TEMP 4-14.....	deleted
3-3.....	ALL/GEN M	4-15.....	ALL/GEN M
3-4.....	ALL/GEN M	4-16.....	ALL/GEN M
3-5.....	ALL/GEN M	4-17.....	ALL/GEN M,3
3-6.....	ALL/GEN M	4-18.....	ALL/GEN M,3
3-7.....	ALL/GEN M	4-19.....	ALL/GEN M
3-8.....	ALL/GEN M	4-20.....	ALL/GEN M
3-9.....	ALL/GEN M	4-21.....	ALL/GEN M
3-10.....	ALL/GEN M	4-22.....	ALL/GEN M,3
3-11.....	ALL/GEN M	4-23.....	ALL/GEN M,3
3-12.....	ALL/GEN M	4-24.....	ALL/GEN M

* – Omit from flight book

5-1	ALL/GEN M	5-43	ALL/GEN M
5-2	ALL/GEN M,2	5-44	ALL/GEN M
5-3	ALL/GEN M,2	A6-1	ALL/GEN M
5-4	ALL/GEN M	A6-2	3,4/GEN M
5-5	ALL/GEN M	A6-3	3,4/GEN M
5-6	ALL/GEN M	A6-4	3,4/GEN M
5-7	ALL/GEN M	B6-1	ALL/GEN M
5-8	ALL/GEN M,2	B6-2	5/GEN M
5-9	ALL/GEN M	B6-3	5/GEN M
5-10	ALL/GEN M	B6-4	5/GEN M
5-11	ALL/GEN M	7-1	ALL/GEN M
5-12	ALL/GEN M	7-2	ALL/GEN M
5-13	ALL/GEN M	7-3	ALL/GEN M
5-14	ALL/GEN M	7-4	ALL/GEN M
5-15	ALL/GEN M	7-5	ALL/GEN M
5-16	ALL/GEN M	7-6	ALL/GEN M
5-17	ALL/GEN M	7-7	ALL/GEN M
5-18	ALL/GEN M	7-8	ALL/GEN M
5-19	ALL/GEN M	7-9	ALL/GEN M
5-20	ALL/GEN M	7-10	ALL/GEN M
5-21	ALL/GEN M	8-1	ALL/GEN M
5-22	ALL/GEN M	8-2	ALL/GEN M
5-23	ALL/GEN M	8-3	ALL/GEN M
5-24	ALL/GEN M	8-4	ALL/GEN M
5-25	ALL/GEN M	8-5	ALL/GEN M
5-26	ALL/GEN M	8-6	ALL/GEN M
5-27	ALL/GEN M	8-7	ALL/GEN M
5-28	ALL/GEN M	8-8	ALL/GEN M
5-29	ALL/GEN M	8-9	ALL/GEN M
5-30	ALL/GEN M	8-10	ALL/GEN M
5-31	ALL/GEN M	9-1	ALL/GEN M
5-32	ALL/GEN M	9-2	ALL/GEN M
5-33	ALL/GEN M	A10-1	ALL/GEN M
5-34	ALL/GEN M	A10-2	ALL/GEN M
5-35	ALL/GEN M	A10-3	ALL/GEN M
5-36	ALL/GEN M	A10-4	ALL/GEN M
5-37	ALL/GEN M	A10-5	ALL/GEN M
5-38	ALL/GEN M	A10-6	ALL/GEN M
5-39	ALL/GEN M	A10-7	ALL/GEN M
5-40	ALL/GEN M	A10-8	ALL/GEN M
5-41	ALL/GEN M	A10-9	3,4/GEN M
5-42	ALL/GEN M	A10-10	ALL/GEN M

A10-11 ..... ALL/GEN M
A10-12 ..... ALL/GEN M
A10-13 ..... ALL/GEN M
A10-14 ..... ALL/GEN M
A10-15 ..... ALL/GEN M
A10-16 ..... ALL/GEN M
A10-17 ..... ALL/GEN M
A10-18 ..... ALL/GEN M
A10-19 ..... 3,4/GEN M
A10-20 ..... ALL/GEN M
A10-21 ..... ALL/GEN M
A10-22 ..... ALL/GEN M
A10-23 ..... ALL/GEN M
A10-24 ..... ALL/GEN M,3
A10-25 ..... ALL/GEN M
A10-26 ..... ALL/GEN M
A10-27 ..... 3,4/GEN M
A10-28 ..... ALL/GEN M,1
A10-29 ..... ALL/GEN M
A10-30 ..... ALL/GEN M,3
A10-31 ..... 3,4/GEN M
A10-32 ..... 3,4/GEN M
A10-33 ..... 3,4/GEN M
A10-34 ..... 3,4/GEN M
A10-35 ..... 3,4/GEN M
A10-36 ..... ALL/GEN M,3
A10-37 ..... 3,4/GEN M
A10-38 ..... 3,4/GEN M
A10-39 ..... 3,4/GEN M,3
A10-40 ..... 3,4/GEN M
A10-41 ..... 3,4/GEN M
A10-42 ..... ALL/GEN M
A10-43 ..... ALL/GEN M,3
A10-44 ..... ALL/GEN M
A10-45 ..... 3,4/GEN M
A10-46 ..... ALL/GEN M
A10-47 ..... ALL/GEN M,3
A10-48 ..... ALL/GEN M
A10-49 ..... ALL/GEN M
A10-50 ..... ALL/GEN M
A10-51 ..... 3,4/GEN M
A10-52 ..... ALL/GEN M
A10-53 ..... ALL/GEN M
A10-54 ..... ALL/GEN M
A10-55 ..... ALL/GEN M
A10-56 ..... ALL/GEN M
A10-57 ..... ALL/GEN M
A10-58 ..... ALL/GEN M
A10-59 ..... ALL/GEN M
A10-60 ..... ALL/GEN M
A10-61 ..... 3,4/GEN M,2
A10-62 ..... 3,4/GEN M,3
A10-63 ..... ALL/GEN M
A10-64 ..... ALL/GEN M
A10-65 ..... ALL/GEN M
A10-66 ..... ALL/GEN M
A10-67 ..... ALL/GEN M
A10-68 ..... ALL/GEN M
A10-69 ..... 3,4/GEN M
A10-70 ..... ALL/GEN M
A10-71 ..... ALL/GEN M,3
A10-72 ..... ALL/GEN M
A10-73 ..... ALL/GEN M
A10-74 ..... 3,4/GEN M
A10-75 ..... 3,4/GEN M
A10-76 ..... ALL/GEN M
A10-77 ..... ALL/GEN M
A10-78 ..... 3,4/GEN M
A10-79 ..... 3,4/GEN M
A10-80 ..... ALL/GEN M
A10-81 ..... 3,4/GEN M
A10-82 ..... 3,4/GEN M
B10-1 ..... ALL/GEN M
B10-2 ..... ALL/GEN M
B10-3 ..... ALL/GEN M
B10-4 ..... ALL/GEN M
B10-5 ..... ALL/GEN M
B10-6 ..... ALL/GEN M
B10-7 ..... ALL/GEN M
B10-8 ..... ALL/GEN M
B10-9 ..... 5/GEN M
B10-10 ..... ALL/GEN M
B10-11 ..... ALL/GEN M
B10-12 ..... ALL/GEN M

B10-13 ..... ALL/GEN M
B10-14 ..... ALL/GEN M
B10-15 ..... ALL/GEN M
B10-16 ..... ALL/GEN M
B10-17 ..... ALL/GEN M
B10-18 ..... ALL/GEN M
B10-19 ..... 5/GEN M
B10-20 ..... ALL/GEN M
B10-21 ..... ALL/GEN M
B10-22 ..... ALL/GEN M
B10-23 ..... ALL/GEN M
B10-24 ..... ALL/GEN M,3
B10-25 ..... ALL/GEN M
B10-26 ..... ALL/GEN M
B10-27 ..... 5/GEN M
B10-28 ..... ALL/GEN M,1
B10-29 ..... ALL/GEN M
B10-30 ..... ALL/GEN M,3
B10-31 ..... 5/GEN M
B10-32 ..... 5/GEN M
B10-33 ..... 5/GEN M
B10-34 ..... 5/GEN M
B10-35 ..... 5/GEN M
B10-36 ..... ALL/GEN M,3
B10-37 ..... 5/GEN M
B10-38 ..... 5/GEN M
B10-39 ..... 5/GEN M,3
B10-40 ..... 5/GEN M
B10-40a ..... 5/GEN M
B10-40b ..... 5/GEN M
B10-41 ..... 5/GEN M
B10-42 ..... ALL/GEN M
B10-43 ..... ALL/GEN M,3
B10-44 ..... ALL/GEN M
B10-45 ..... 5/GEN M
B10-46 ..... ALL/GEN M
B10-47 ..... ALL/GEN M,3
B10-48 ..... ALL/GEN M
B10-49 ..... ALL/GEN M
B10-50 ..... ALL/GEN M
B10-51 ..... 5/GEN M
B10-52 ..... ALL/GEN M
B10-53 ..... ALL/GEN M
B10-54 ..... ALL/GEN M
B10-55 ..... ALL/GEN M
B10-56 ..... ALL/GEN M
B10-57 ..... ALL/GEN M
B10-58 ..... ALL/GEN M
B10-59 ..... ALL/GEN M
B10-60 ..... ALL/GEN M
B10-61 ..... 5/GEN M,2
B10-62 ..... 5/GEN M,3
B10-63 ..... ALL/GEN M
B10-64 ..... ALL/GEN M
B10-65 ..... ALL/GEN M
B10-66 ..... ALL/GEN M
B10-67 ..... ALL/GEN M
B10-68 ..... ALL/GEN M
B10-69 ..... 5/GEN M
B10-70 ..... ALL/GEN M
B10-71 ..... ALL/GEN M,3
B10-72 ..... ALL/GEN M
B10-73 ..... ALL/GEN M
B10-74 ..... 5/GEN M,2
B10-75 ..... 5/GEN M,2
B10-76 ..... ALL/GEN M
B10-77 ..... ALL/GEN M
B10-78 ..... 5/GEN M,2
B10-79 ..... 5/GEN M,2
B10-80 ..... ALL/GEN M
B10-81 ..... 5/GEN M
B10-82 ..... 5/GEN M
A11-1 ..... ALL/GEN M
A11-2 ..... 3,4/GEN M
A11-3 ..... 3,4/GEN M
A11-4 ..... ALL/GEN M
B11-1 ..... ALL/GEN M
B11-2 ..... 5/GEN M
B11-3 ..... 5/GEN M
B11-4 ..... ALL/GEN M
11-5..... ALL/GEN M
11-6..... ALL/GEN M
11-7..... ALL/GEN M,3
11-8..... ALL/GEN M

11-9..... ALL/GEN M
11-10..... ALL/GEN M
11-11..... ALL/GEN M
11-12..... ALL/GEN M
12-1.....* ALL/GEN M
CC 12-2.....⊗* ALL/GEN M
CC 12-3.....* ALL/GEN M
CC 12-4.....* ALL/GEN M
CC 12-5.....* ALL/GEN M
CC 12-6.....* ALL/GEN M
CC 12-7.....* ODS/GEN M
12-8.....* ALL/GEN M

* – Omit from flight book
⊗ – Highlights reqd

ORBIT POCKET CHECKLIST CUE CARDS

Title	Ref. Page	Card No.
LEAKING OMS PRPLT/ He BURN		
(Front)	CC 12-2	OPCL-1a/O/G
(Back)	CC 12-3	OPCL-1b/O/B
HAZARDOUS SPILL RESPONSE – ORBITER		
(Front)	CC 12-4	OPCL-2a/O/L
(Back)	CC 12-5	OPCL-2b/O/J
FIRE/SMOKE		
(ASCENT/ENTRY) (Front)	See ASC/ENT SYS PROC	
(ORBIT) (Back)	CC 12-6	OPCL-7b/A,O,E/K
ODS VOLUME FIRE/SMOKE		
(Front)	CC 12-7	OPCL-3a/ODS/O/I
(Back)	CC 12-7	OPCL-3b/ODS/O/E

CONTENTS PAGE

APU/HYD

APU/HYD SCHEMATIC 1-1
HYD ACCUM (RSVR) P LOW (CIL) 1-2
CIRC PUMP PRESS LOW 1-2
APU FUEL SUPPLY T 1-3
PUMP T 1-3
WATER T 1-3

COMM

PWRUP 2-1
BCE BYP KU 2-1
ICOM LOST 2-2
S76 COMM PA 2(1) TEMP 2-2
PA 2(1) OUTPUT LOW 2-2
NSP 2(1) BITE 2-2
COMSEC 2(1) BITE 2-2
COMM LOST 2-3
UHF COMM LOST 2-4

DPS

ALL IDPs ASSIGNED TO FAILED GPC 3-2
DUAL DPS DISPLAY COMMANDERS 3-2
BFS ENGAGE 3-2
SUMWORD ICC 1(2,3,4) 3-3
BCE STRG X 3-4
PL1(2) MDM I/O ERROR;
OUTPUT 3-5
FF(FA) MDM OUTPUT 3-6
I/O ERROR 3-7
PASS GNC GPC (1st FAIL) 3-8
SM GPC FAIL 3-9
GPC BITE 1(2,3,4) 3-11
GNC RECOVERY VIA G2FD 3-12

ECLS

EQUIPMENT COOLING MATRIX 4-1
O2(N2) FLOW HIGH/CAB P LOW/dP/dT 4-3
CABIN PRESS LEAK NOMOGRAPH 4-8
N2 DEPLETION GRAPH 4-10
H2O TK QTY LOW AND DECR 4-11
EVAP OUT T HIGH 4-11
EMER PLBD OPENING 4-13
EVAP OUT T LOW 4-14
H2O SPLY PRESS HIGH 4-15
FREON FLOW LOW 4-16

CONTENTS (Cont) PAGE

FREON LOOP RAD OUT T LOW 4-17
LEAK 4-17
LEAKING/EMPTY HALON BOTTLE 4-18
ODS POST-FIRE ACTIONS 4-19
POST-FIRE CABIN CLEANUP 4-22
ISS C&W TOX ATM 4-23
PRESSURE CONTROL SYSTEM SCHEMATIC 4-24

EPS
MN BUS UNDERVOLTS/FC VOLTS (CIL) 5-2
3Φ AC MOTORS STOPPED 5-4
AC VOLTS 5-5
OVERLOAD 5-7
ESS BUS VOLTS LOW (CIL) 5-8
CNTL BUS V LOW/CNTL BUS RPC 5-9
FC COOLANT PUMP ΔP LOW (CIL) 5-11
FC1(2,3) H2 PUMP ↑↓ 5-11
FC REACTANT VLV CLOSED 5-12
COOL P (CIL) 5-12
H2O RLF NOZ TEMP ↑↓ 5-13
DELTA V 1(2,3) (CIL) 5-14
pH HIGH or H2O LINE pH HIGH 5-14
SHUTDN (1st) (CIL) 5-15
2nd FC SHUTDN 5-15
BUS TIE (CIL) 5-16
FC SAFING 5-16
CRYO O2(H2) PRESS/TEMP HIGH 5-17
LEAK 5-17
SCHEMATIC 5-19
O2/H2 HTR LOSS 5-20
BUS LOSS IDENTIFICATION TABLES 5-21
ACTION (NOTE CIL ITEMS ON 5-25) 5-25
PWRUP TABLE 5-25
AC1 5-26
MNA (CIL) 5-27
AC2 5-30
MNB (CIL) 5-31
AC3 5-34
MNC (CIL) 5-35
CNTL AB 5-38
BC 5-39
CA 5-41
ESS 1BC (CIL) 5-42
2CA (CIL) 5-43
3AB (CIL) 5-44

CONTENTS (Cont) PAGE

GNC
SINGLE STRING GPS TROUBLESHOOTING A6-2
THREE STRING GPS TROUBLESHOOTING B6-2

OMS
OMS SCHEMATIC 7-1
SECURE 7-2
TK P (FU and OX) HIGH 7-2
XFEED: R OMS to L OMS 7-2
L OMS to R OMS 7-2
XFEED RETURN: OMS 7-3
OMS N2 TK P LOW 7-3
REG P LOW 7-3
HIGH 7-3
TK P (FU or OX) LOW 7-4
He TK P LOW 7-6
LEAKING OMS PRPLT/He BURN 7-7
ΔVX vs ORB ALT GRAPH 7-9
LEAKING OMS He ΔV TABLE 7-10

RCS
RCS SCHEMATIC 8-1
SECURE 8-2
I'CNCT: L OMS to RCS (CIL) 8-3
R OMS to RCS (CIL) 8-3
I'CNCT TK SWITCH: From L to R OMS FEED 8-4
From R to L OMS FEED 8-4
RETURN (OPS 2,3) 8-4
XFEED: R RCS to L RCS 8-5
L RCS to R RCS 8-5
XFEED RETURN: RCS 8-5
RCS RM LOSS 8-6
RM DLMA MANF 8-6
RCS TK P LOW (FU or OX) 8-7
HIGH (FU or OX) 8-7
JET FAIL (ON) 8-7
(LEAK) 8-7
(OFF) 8-7
LEAK ISOL 8-8

MPS
MPS C/W 9-2

CONTENTS (Cont) PAGE

PWRDN
LOSS OF 2 CAB FANS 10-2
2 H2O LOOPS 10-7
CAB PRESS..... 10-27
HI LOAD EVAP 10-33
1 FREON LOOP..... 10-35
1 FC 10-39
2nd FC ON-ORBIT (TIG < 4 hr)..... 10-41
(TIG > 4 hr)..... 10-45
2 FREON LOOPS 10-49
FES 10-69
AV BAY FIRE..... 10-73

PRIORITY PWRDN
PRIORITY PWRDN PROCEDURES..... 11-1
GROUP A 11-3
B 11-5
C 11-6
1..... 11-7
2..... 11-7
3..... 11-8
4..... 11-8
5..... 11-8
6..... 11-9
7..... 11-10

CUE CARD CONFIGURATION..... 12-1

APU/HYD

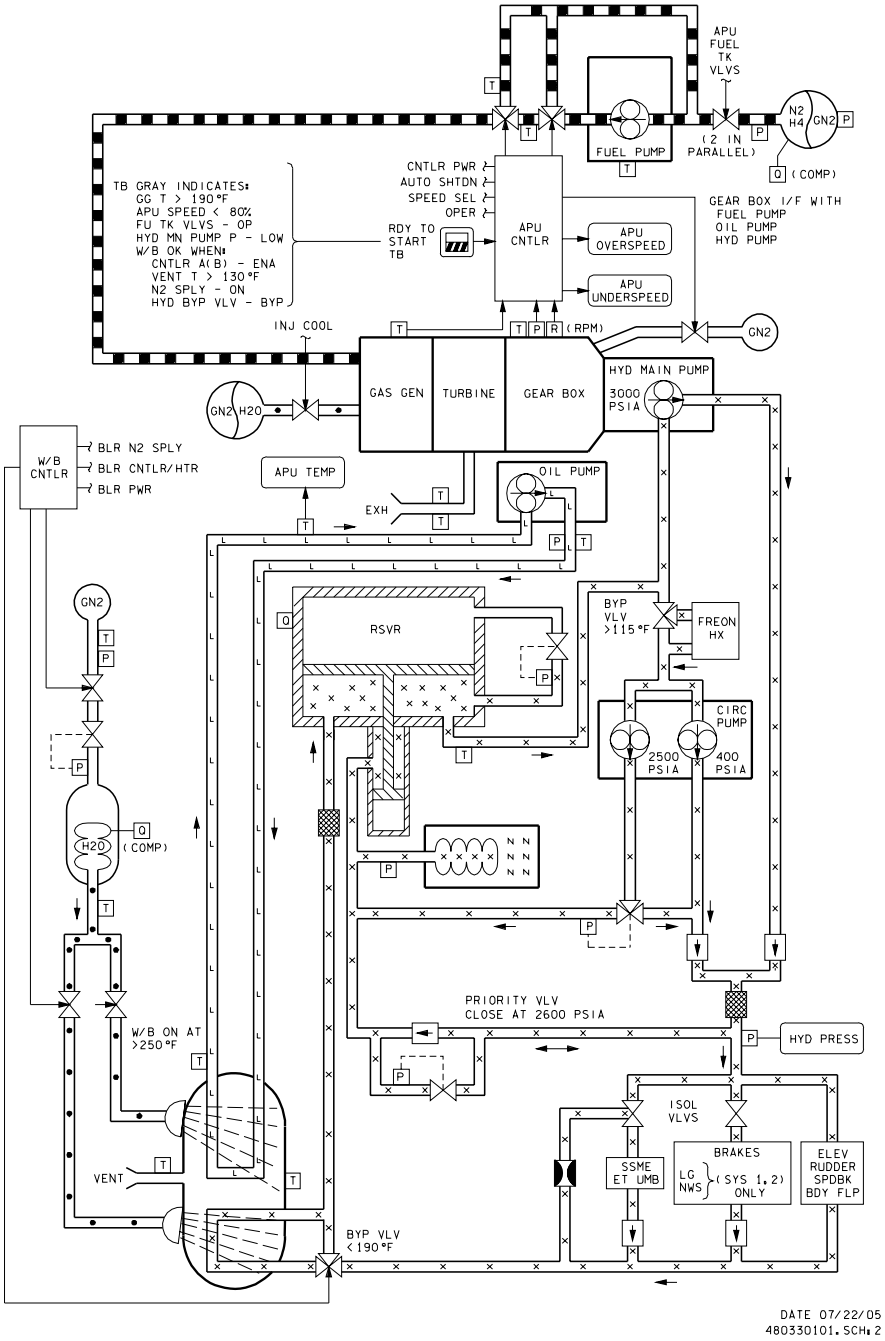
APU FUEL TK VLVS
N2 H4
GN2
(2 IN PARALLEL)
FUEL PUMP
(COMP)
TB GRAY INDICATES:
GG T > 190°F
APU SPEED < 80%
FU TK VLVS - OP
HYD MN PUMP P - LOW
W/B OK WHEN:
CNTLR A(B) - ENA
VENT T > 130°F
N2 SPLY - ON
HYD BYP VLV - BYP
CNTLR PWR
AUTO SHTDN
SPEED SEL
OPER
RDY TO START TB
APU CNTLR
APU OVERSPEED
APU UNDERSPEED
GEAR BOX I/F WITH
FUEL PUMP
OIL PUMP
HYD PUMP
INJ COOL
(RPM)
GAS GEN
TURBINE
GEAR BOX
HYD MAIN PUMP
3000 PSIA
H2O
W/B CNTLR
BLR N2 SPLY
BLR CNTLR/HTR
BLR PWR
APU TEMP
EXH
OIL PUMP
RSVR
BYP VLV >115°F
FREON HX
CIRC PUMP
2500 PSIA
400 PSIA
PRIORITY VLV CLOSE AT 2600 PSIA
HYD PRESS
W/B ON AT >250°F
VENT
ISOL VLVS
SSME ET UMB
BRAKES
LG NWS
(SYS 1,2) ONLY
ELEV RUDDER SPDBK BDY FLP
BYP VLV < 190°F
DATE 07/22/05
480330101.SCH: 2

HYD ACCUM (RSVR) P LOW SM 87 HYD THERMAL
(SM2 HYD ACCUM P, ACUM P < 1930) SM 86 APU/HYD
(S86 RSVR/ACC P, RSVR P < 28 or ACCUM P < 1930)

> CAUTION
> Hyd MN Pump may be damaged if APU started with low HYD RSVR P

R2
1. (Aff) HYD CIRC PUMP – ON
2. √MCC

If no comm, go to MAL, APU/HYD, 1.2a, RSVR P ↓, ACCUM P ↓ [1]

HYD CIRC PUMP PRESS LOW SM 87 HYD THERMAL
(S87 CIRC PMP P, PRESS < 100)

> CAUTION
> HYD CIRC PUMP – OFF within 60 sec to avoid damage

R2
1. HYD CIRC PUMP – OFF
2. √MCC

If no comm, go to MAL, APU/HYD, 1.3a, HYD CIRC PUMP P ↓ [1]

APU FUEL SUPPLY T SM 88 APU/ENVIRON THERM
(S86 FU TK VLV) SM 86 APU/HYD
(S88 APU TANK T)
(S88 APU FU LN)

A12 1. (Aff) APU HTR TK/FU LN/H2O SYS A – OFF
B – OFF

2. √MCC
If no comm and 'S88 APU TANK T' or 'APU FU LN' msg, go to MAL, APU/HYD, 1.1b 2
If no comm and 'S86 FU TK VLV' msg, go to MAL, APU/HYD, 1.1c 1

APU FUEL PUMP T SM 88 APU/ENVIRON THERM
(S88 APU FU PMP)

CRT If APU FUEL T PUMP OUT or BYP LN ↓:
A12 1. (Aff) APU HTR GAS GEN/FU PUMP – A AUTO(B AUTO)
>>

2. (Aff) APU HTR GAS GEN/FU PUMP – OFF

NOTE
Expect 'S86 GG/FU PMP'
and 'S86 GBX P FDA' msgs

3. √MCC
If no comm, go to MAL, APU/HYD, 1.1b 2

APU WATER T SM 88 APU/ENVIRON THERM
(S88 APU H2O T)

If H2O INJ LN 1 or 2 ↓↑:
A12 1. APU HTR TK/FU LN/H2O SYS 1 A(B) – OFF
B(A) – ON

2. √MCC
If H2O INJ LN 3 ↓↑:
3. APU HTR TK/FU LN/H2O SYS 3 A(B) – OFF
B(A) – ON

4. √MCC

This Page Intentionally Blank

COMMUNICATIONS

PROBLEM	PWRUP	
	LOW LEVEL (Group B)	MSN EXT (Group C)
COMM LOSS	N/A	PL 1

BCE BYP KU SM 201 ANTENNA
(KU 8=M)

1. ITEM 8 ENTER

If msg repeats:

2. If AOS: √MCC for comm config
3. If no comm: Go to COMM LOST, steps 6,7 for TDRS mode

ICOM LOST

Try following until ICOM AUDIO regained:

1. (Aff) AUD CNTL sel – sel alt
2. AUD CTR – 2
3. Plug into another ATU
4. Try another HDST/CCU
5. √MCC

S76 COMM PA 2(1) TEMP

SM 76 COMMUNICATIONS

(TEMP > 230)

1. Perform COMM LOST, steps 6,7 for TDRS mode, then:
2. √Comm with MCC

If no comm:

3. Go to COMM LOST

S76 PA 2(1) OUTPUT LOW

SM 76 COMMUNICATIONS

(PWR OUT < 60)

1. Perform COMM LOST, steps 6,7 for TDRS mode, then:
2. √Comm with MCC

If no comm:

3. Go to COMM LOST

S76 NSP 2(1) BITE

SM 76 COMMUNICATIONS

(BITE = ‘FAIL’)

1. Perform COMM LOST, steps 6,7 for TDRS mode, then:
2. √Comm with MCC

If no comm:

3. Go to COMM LOST

S76 COMSEC 2(1) BITE

SM 76 COMMUNICATIONS

(BITE = ‘FAIL’)

1. Perform COMM LOST, steps 6,7 for TDRS mode, then:
2. √Comm with MCC

If no comm:

3. Perform COMM LOST, step 9, then:
4. √Comm with MCC

   If no comm:

   5. Go to COMM LOST

NOTE
Perform comm checks with MCC after each step

1. AUD CTR – 2(1)

If all ICOM and A/G failed (check three ATUs):

R14:A,F 2. √cb ACCU (two) – cl
3. Go to step 10
4. SM 62 PCMMU/PL COMM

If PI XMIT PWR not blank:

A1L Deactivate PI:
√S-BD PL CNTL – CMD
PWR SEL – PSP
CNTL – PNL,CMD
Wait 2 min for TDRS acquisition

5. If F9 meter < 300, wait for next TDRS in view

NOTE
When selecting between DC Amps and Signal Strength posns, expect fluctuations which will dampen out within 1 min

If no joy on next TDRS or comm required sooner:

A1L 6. Verify configured for TDRS mode:
√NSP UPLK DATA – S-BD
√S-BD PM MODE sel – TDRS
√NSP DATA RATE (two) – HI
√NSP CODING (two) – ON

C3 7. S-BD PM CNTL – PNL

NOTE
XMIT may be delayed 140 sec for PA warmup. Receive not affected

8. Sel best ant, F9 meter > 300. If no joy, return to GPC
9. Bypass encrypt (2 min reqd for MCC reconfig):

A1L NSP ENCRYPTION MODE – SEL
SEL – BYP

Cont next page

10. Confirm U/L CMD capability:
    Cue MCC with: ITEM 88 +8 8 8 8 8 8
    Check flashing U/L on GNC display
    Ack with: ITEM 99 +9 9 9 9 9 9
    Check abort light cycling ON/OFF (MCC ack)
    Check no flashing U/L

If U/L CMD confirmed:

11. Go to MAL, COMM SSR-1, LOSS OF ALL VOICE COMM >>

If no comm and no U/L CMD:

12. Go to MAL, COMM, 2.3a, NO S-BD COMM: TDRS

UHF COMM LOST (mult pnls)

NOTE

Perform comm checks with MCC after each step

O6

1. √UHF SPLX/EVA PWR AMPL – ON
2. AUD CTR – 2(1)

Reconfig UHF sys:

3. UHF SPLX SQUELCH – OFF
4. UHF SPLX/EVA XMIT FREQ – 296.8/417.1
   Call site stating “on 296.8”, wait 30 sec for site reconfig
5. Roll vehicle HEADS UP to point UHF antenna at ground
6. UHF SPLX/EVA PWR AMPL – OFF (LO PWR XMIT)
7. UHF MODE sel – G T/R
   Call site stating “on 243.0”, wait 30 sec for site reconfig

DPS

DATA PROCESSING SYSTEM

ALL IDPs ASSIGNED TO FAILED GPC

> CAUTION
> If GPC/CRT key used to assign IDP1(2,3) to BFS, deassign to avoid dual commanders

1. If no active GNC GPC: Go to GNC RECOVERY VIA G2FD >>
2. (Failed) GPC PWR – OFF
3. IDP/CRT1,2,3 MAJ FUNC – PL
4. √(FD) GPC PWR – ON
   MODE – STBY,RUN (tb-RUN)
5. IDP/CRT1,2,3 MAJ FUNC – as desired

If FD GPC not needed to recover lost major function:

6. (FD) GPC MODE – STBY (tb-bp),HALT
   – STBY (tb-RUN)
   – HALT (tb-bp)

If GNC GPC failed: Go to PASS GNC GPC (1st FAIL) >>
If SM GPC failed: Go to PASS SM GPC FAIL

DUAL DPS DISPLAY COMMANDERS

If aff IDP assigned to BFS via BFC sw:

1. BFC CRT DISP – OFF, then go to step 3

2. BFC CRT DISP – ON
   SEL – aff IDP

If reqd to clean up display:

3. (Aff) IDP/CRT – OFF,ON

BFS ENGAGE

1. RGAs (four) – ON
2. √(BFS) GPC PWR – ON
   MODE – STBY (tb-RUN)
   OUTPUT – B/U
3. (SM) GPC OUTPUT – NORM
4. BFC CRT DISP – ON
5. L(R) FLT CNTLR PWR – ON
6. √Pri RJDs (sixteen) – ON
7. L(R) RHC BFS engage pb – push

> NOTE
> BFS will take PL buses from SM GPC

8. (BFS) GNC, OPS 301 PRO
9. OI PCMMU FORMAT – FXD
10. If no comm at AOS: sel best S-BD PM ANT
11. Go to MAL, DPS, GPC FRP-4, PASS RECOVERY AFTER BFS ENGAGE (ASCENT/ORBIT/ENTRY)

SUMWORD ICC 1(2,3,4)

If CS = 2, when time permits:
1. Go to MAL, DPS SSR-2, GPC S/W INITIATED MEM DUMP >>

If only one GPC annun:
Consider annunciating GPC failed:
2. Go to PASS SM(GNC) GPC FAIL >>

If annun against SM GPC (prior to adding the GPC to redundant set):
3. Go to PASS SM GPC FAIL >>

If annun against single GNC GPC:
4. Go to PASS GNC GPC (1st FAIL)

BCE STRG X (no 'MDM OUTPUT' msg)

If IMU:

1. GNC 21 IMU ALIGN
   IMU – desel
2. √OPER/STBY mode
3. If OPER: Go to step 6

NOTE

If > 3 min since 'IMU' msg occurred (poss undetect IMU cage), upon IMU recovery, check att ANG prior to 'resel if IMU'

4. If STBY: Go to MAL, DPS, 5.3b, BCE STRG X 1 >>

If MTU:

If mult 'STRG MTU' msgs:

5. Go to MAL, DPS, 5.2d, TIME MTU 11 >>

6. GNC I/O RESET

If recovered:

7. Resel if IMU >>

If NSP and msg repeats:

8. If AOS: √MCC

If LOS/no comm:

9. Go to COMM LOST, step 6 (COMM), 2-3 >>

10. GNC 1 DPS UTILITY
    Aff String – port mode

If recovered:

11. Resel if IMU >>

12. Cycle MDM – OFF,ON (FF: may cage IMU)

NOTE

Cycle FF if 'A' or 'B' msg; cycle FA if 'C' or 'D'

13. GNC I/O RESET

Cont next page

If recovered:

14. Resel if IMU >>

15. Orig ports – resel

M16. If IMU or GPS: √MCC >>

17. If any other:

Go to MAL, DPS, 5.3b, BCE STRG X 15

PL1(2) MDM I/O ERROR; PL1(2) MDM OUTPUT

If mult simo 'I/O ERR' or 'MDM OUTPUT' msgs on PL1 and PL2 (GPC prob):

1. Go to PASS SM GPC FAIL >>

2. SM I/O RESET; if recovered:

If PSP reqd:

3. SM 62 PCMMU/PL COMM

PSP I/O RESET PSP 1(2) – ITEM 6(7) EXEC (*****)

4. If reqd, go to PL/DPS RECONFIG, Recovery [PL SYS (PL OPS)(SODF: ASSY OPS)] >>

5. If reqd, perform PL/DPS RECONFIG, Secure [PL SYS(PL OPS) (SODF: ASSY OPS)], then:

If MCC GO for pwr cycle:

6. (Aff) MDM PL – OFF,ON

7. SM I/O RESET; if recovered:

If PSP reqd:

8. SM 62 PCMMU/PL COMM

PSP I/O RESET PSP 1(2) – ITEM 6(7) EXEC (*****)

9. If reqd, go to PL/DPS RECONFIG, Recovery [PL SYS (PL OPS)(SODF: ASSY OPS)] >>

If msg repeats:

10. If PL1 msg and no comm: Go to COMM LOST, steps 5,6,7,8 for TDRS mode (COMM), 2-3

11. If PL2 msg and no comm: Sel best S-BD PM ANT

12. Go to MAL, DPS, 5.3c, I/O ERROR/MDM OUTPUT PL 1(2) 1

FF(FA) MDM OUTPUT

FAULT

1. GNC I/O RESET
2. If no ‘MDM OUTPUT’: Re-annun >>

If single ‘MDM OUTPUT’ msg:

3. GNC 1 DPS UTILITY
   Port mode
4. If no ‘MDM OUTPUT’: Annun >>

NOTE

If dual GNC OPS and ‘MDM OUTPUT’ msg(s) annun by:

- Redundant set – failed GPC is commanding the aff strings
- Single GNC GPC – failed GPC is annun fault msg(s)

If not recovered:

5. Go to PASS GNC GPC (1st FAIL)

FF(FA) MDM I/O ERROR

1. GNC I/O RESET; if recovered >>

If simo 'I/O ERR' msgs for mult MDMs (possible GPC prob):

2. √MCC/restring as reqd >>
3. If FF: Check ADI (aff String)
4. If ADI 'OFF' flag (GPC prob): Go to step 16
5. GNC 1 DPS UTILITY
   Aff String – port mode; if recovered >>

If alt msg on aff string (GPC prob):

6. Go to step 16

If MCC GO for pwr cycle:

7. If FF:
   GNC 21 IMU ALIGN
   Aff IMU – desel
8. (Aff) MDM – OFF,ON (FF: may cage IMU)
9. GNC I/O RESET
10. If recovered: resel IMU if desel >>
11. Resel orig ports
12. If recovered: resel IMU if desel >>
13. If not: Go to MAL, DPS, 5.3a, I/O ERROR FF(FA) 17 >>

If MCC NO-GO for pwr cycle:

14. If FF:
    GNC 21 IMU ALIGN
    Aff IMU – desel >>
15. If FA1 or FA2, then:
    R OMS TK ISOL A – CL (tb-CL) >>
16. Sel desired FF/FA MDM:
17. GNC 1 DPS UTILITY
    Port mode as reqd

    If FF MDM not chosen:

18. GNC 21 IMU ALIGN
    Aff IMU – desel
19. When time permits restring (with possible F-T-S):
    Go to MAL, DPS, 5.3a, I/O ERROR FF(FA) 1

OPCL/ALL/GEN M

PASS GNC GPC (1st FAIL)

NOTE

If Group B(C) LOW LEVEL (MSN EXT) pwrdn config,
MMU 2 – ON

NOTE

No keyboard entries or sw throws 10 sec:
Before and after moding PASS GPCs to RUN
Before OPS transition or set expansion/contraction
requests until new OPS base page is displayed

If no active GNC GPC and G2FD GPC avail:
1. Go to GNC RECOVERY VIA G2FD >>

If no active GNC GPC and no FD GPC avail:
2. Go to BFS ENGAGE >>

If failure is CS split and GPC config is one GNC and one SM:
3. Go to MAL, DPS, 5.1a, CS SPLIT [1] >>

If Dual G2 and RS split (CS intact) but both GPCs appear functional
(check DPS and ADI displays, MODE tb):
4. Retain GPC with two IMUs

If Triple G2 and RS split but GPCs appear functional
(check DPS and ADI displays, MODE tb):
5. Retain GPC with two strings

6. (Aff) GPC PWR – OFF

If FF1 PWR cycled:
7. [GNC 21 IMU ALIGN]
IMU 1 (caged) – desel

8. Reassign failed GPC IDPs: GPC/CRT as reqd

9. [GNC 0 GPC MEMORY]
Check downlist to active GNC GPC:
DOWNLIST GPC – ITEM 44 +X EXEC

If redundant GNC GPCs reqd and G2FD avail:
10. √(G2FD) GPC MODE – HALT
√OUTPUT – NORM
√PWR – ON
MODE – STBY (tb-RUN),RUN
11. IDP/CRTX MAJ FUNC – PL
12. GPC/CRT – (G2FD) GPC/X EXEC

If GNC OPS 202:
13. GNC, OPS 201 PRO

~

Cont next page

If RNDZ NAV Ena:

14. DAP: LVLH
15. GNC UNIV PTG
    CNCL – ITEM 21 EXEC (no *****)
16. √Tgt set, assign FC strings, CRTs, and MMUs in current MC (check PL1/2 and L1,2 deassigned)
17. GNC, OPS 201 PRO

If RNDZ NAV reqd:

18. Perform RNDZ NAV RECOVERY (RNDZ, CONTINGENCY OPS)
19. GNC 22 S TRK/COAS CNTL
    S TRK -Y,-Z: STAR TRK – ITEM 3,4 EXEC (*****)
20. GNC 21 IMU ALIGN; RESUME

If redundant GNC GPCs not reqd or G2FD not avail:

21. Assign FC strings, CRTs, and MMUs in current MC (check PL1/2 and L1,2 deassigned)
22. GNC, OPS XXX PRO

23. When time permits: Go to MAL, DPS, GPC FRP-1, SINGLE GPC FAIL

PASS SM GPC FAIL

NOTE

No keyboard entries or sw throws 10 sec:
Before and after moding PASS GPCs to RUN
Before OPS transition or set expansion/contraction requests until new OPS base page is displayed

NOTE

Ku-Band sys may be reqd to be taken to STBY to prevent exceeding radiation constraints of the PL/EVA crewmember

If AOS:

1. √MCC for comm config and radiation constraints

If no comm:

A1U 2. KU BD PWR – STBY
    CNTL – PNL,CMD
3. Perform COMM LOST, steps 6,7,8 for TDRS mode (COMM), 2-3
4. √MMU 2 PWR – ON

If failure is CS split and GPC config is one GNC and one SM:

5. Go to MAL, DPS, 5.1a, CS SPLIT 1 >>

Cont next page

OPCL/ALL/GEN M

6. If reqd, perform PL/DPS RECONFIG, Secure [PL SYS(PL OPS) (SODF: ASSY OPS)], then:
7. (SM) GPC PWR – OFF
8. MDM PL1,2 PWR (two) – OFF,ON
9. GNC 1 DPS UTILITY
   UL CNTL ENA – ITEM 36 EXEC (*****)
   √CKPT RETRV ENA – ITEM 12 EXEC (*****)

If G2FD GPC avail:

10. √(G2FD) GPC MODE – HALT
    √PWR – ON
    MODE – STBY (tb-RUN),RUN

If G2FD GPC not avail and triple G2:

11. Assign two GNC GPCs strings, CRTs, and MMUs in current MC (verify PL1/2 and LB1 deassigned). Do not change target set
12. GNC, OPS XXX PRO
13. (Tgt) GPC MODE – STBY (tb-bp)
    – RUN (tb-RUN)
14. (Tgt) GPC OUTPUT – TERM
15. IDP/CRTX MAJ FUNC – SM
16. GPC/CRT tgt GPC/X EXEC
17. SM 0 GPC MEMORY
    Assign tgt GPC CRTs, MMUs, PL1/2 and LB1 in MC 4(5)
18. SM, OPS 201(401) PRO (Tgt GPC IDP)
19. SM 1 DPS UTILITY
    UL CNTL AUTO – ITEM 35 EXEC (*****)
    CKPT RETRV ENA – ITEM 12 EXEC (*****)
20. Perform LOAD PCMMU FORMAT (ORB OPS FS, COMM/INST), then:

If PSP reqd:

21. SM 62 PCMMU/PL COMM
    PSP I/O RESET PSP 1(2) – ITEM 6(7) EXEC (*****)

If PLBD OPS:

R13L 22. PL BAY DR SYS (two) – ENA

If RMS PWR – PRI (MCIU pwrd):

23. SM 94 PDRS CONTROL
    (MA, C/W GPC DATA lt on)
    I/O ON – ITEM 5 EXEC (*****) (C/W GPC DATA lt off)
    Update as needed:
    WR range, PL ID, PL INIT ID, EE ID, SPEC 95 overrides
    A8U SAFING – CANCEL (tb-bp if arm desel)
24. If reqd, perform PL/DPS RECONFIG, Recovery [PL SYS(PL OPS) (SODF: ASSY OPS)], then:
25. When time permits: Go to MAL, DPS, GPC FRP-1, SINGLE GPC FAIL

PASS GPC BITE 1(2,3,4)

If SM GPC annun BITE:
1. Go to PASS SM GPC FAIL >>

If single G2 and GNC GPC annun BITE:
2. Go to GNC RECOVERY VIA G2FD >>

If RS ≥ 2 and only one GNC GPC annun BITE (hardware):
3. Go to PASS GNC GPC (1st FAIL) >>

If RS ≥ 2 and all GNC GPCs annun BITE (software):

If cyclic logging of BITE:

If FD GPC avail:

4. Go to GNC RECOVERY VIA G2FD >>

If FD GPC not avail:

5. Check MCC for GO to perform BFS ENGAGE >>

If non-cyclic logging of BITE:

6. When time permits: Go to MAL, DPS SSR-2, GPC S/W INITIATED MEM DUMP

GNC RECOVERY VIA G2FD

NOTE

No keyboard entries or sw throws 10 sec:
Before and after moding PASS GPCs to RUN
Before OPS transition or set expansion/contraction requests until new OPS base page is displayed

If OPS transition failure:

1. Go to MAL, DPS, 5.2a, I/O ERROR MMU 1(2) or MAL, DPS, 5.2b, OFF/BUSY MMU 1(2), as reqd >>
2. (Failed) (GNC) GPC(s) PWR – OFF
3. Secure SM:

A1U KU BD PWR – STBY
CNTL – PNL,CMD

C3 Sel best ant, F9 meter > 300
SM 62 PCMMU/PL COMM
FORMAT FXD – ITEM 1 EXEC (*****)
Perform PL/DPS RECONFIG, Secure [PL SYS(PL OPS) (SODF: ASSY OPS)], time permitting, then:

4. (SM) GPC MODE – STBY (tb-bp) (expect Big X/Poll Fails)
5. Activate Freeze Dry GPC:
   G2FD: √GPC MODE – HALT
   √OUTPUT – NORM
   √PWR – ON
   MODE – STBY (tb-RUN),RUN
   Verify G2FD grabs three FWD IDP/CRTs (reassign IDP4 as reqd)
   6. If G2FD activation fails, go to step 20
7. MC 2 NBAT Setup for Target GPC (Activated G2FD):
   GNC 0 GPC MEMORY

   NOTE

   If currently active IMU was in STBY or IMU currently in STBY was active during time of G2 freeze-dry, do not assign associated string

   Assign all FC strings (except as noted above), CRTs 1,2,3, and MMUs to just activated target GPC (verify PL1/2 and L1,2 deassigned)
8. Config for GNC OPS Transition:
   Pri RJD DRIVER (eight) – OFF
   √RJD MANF L5/F5/R5 DRIVER – ON

Cont next page

NOTE

If G2FD last freeze-dried while RS in G1(G3), holding DAP: FREE pb during OPS transition avoids PRCS false jet fail-off msgs (DAP defaults to A1/AUTO/PRI)

If reqd, DAP: FREE pb – push and hold during OPS transition
GNC, OPS 201 PRO
√DAP: FREE

9. Configure IMU and restring:
GNC 21 IMU ALIGN
Desel aff IMU from step 7
Configure aff IMU to STBY(OPER) as reqd to match GROUP B PWRDN(PWRUP) (no ***** until restring)
GNC 0 GPC MEMORY
Assign remaining FC string to GNC GPC
GNC, OPS 201 PRO
√MCC for resel of aff IMU

10. Re-establish GNC Operational Config:
Pri RJD DRIVER (eight) – as reqd
GNC 20 DAP CONFIG
Load desired DAP A,B
(see FLIGHT PLAN, ORB OPS FS)
GNC 22 S TRK/COAS CNTL
S TRK -Y,-Z: STAR TRK – ITEM 3,4 EXEC (*****)
GNC 21 IMU ALIGN
RESUME
GNC 23 RCS
JET RESET – ITEM 45 EXEC
If L(R) OMS/RCS I'CNCT:
L(R) OMS – ITEM 5(6) EXEC

11. If Orbiter attitude control reqd:
DAP: INRTL/VERN(ALT)

12. Restart SM:
(SM) GPC MODE – RUN (tb-RUN), pause 10 sec
IDP/CRTX: MAJ FUNC – SM
GPC/CRT – SM GPC/X EXEC (not reqd if performing step 21)
SM 1 DPS UTILITY
√CKPT RETRV ENA – ITEM 12 EXEC (no *****)
SM, OPS 201 PRO, pause 10 sec

Cont next page

13. Re-establish SM Operational Config:

NOTE

TFLs reloaded to avoid G2FD GPC utilizing stale downlist-rate status when PGM format is resel

SM 62 PCMMU/PL COMM

Perform LOAD PCMMU FORMAT (ORB OPS FS, COMM/INST)

SM 1 DPS UTILITY

CKPT RETRV ENA – ITEM 12 EXEC (*****)

UL CNTL ENA – ITEM 36 EXEC

If RMS PWR – PRI (re-establish MCIU I/O):

14. SM 94 PDRS CONTROL

(MA, GPC DATA lt on)

I/O ON – ITEM 5 EXEC (*****) (GPC DATA lt off)

A8U SAFING – CANCEL (tb-bp if arm desel)

15. If reqd, perform PL/DPS RECONFIG, Recovery [PL SYS(PL OPS) (SODF: ASSY OPS)], then:

16. Wait for Orbiter SV Uplink:

NOTE

Auto antenna sel and any auto attitude mnvrs may be incorrect until a valid Orbiter SV is uplinked

17. S-BD ANT – GPC

A1U KU BD PWR – ON

SM 1 DPS UTILITY

UL CNTL AUTO – ITEM 35 EXEC

18. Re-establish Track Attitude, as reqd:

UNIV PTG

Load desired att (see FLIGHT PLAN)

Init TRK(MNVR) – ITEM 19(18) EXEC

DAP: AUTO

19. Go to MAL, DPS GPC FRP-1, SINGLE GPC FAIL >>

If G2FD activation fails:

20. (G2FD) GPC PWR – OFF

21. Perform step 12 for temp IDP and SM interface

If second G2FD exists: √MCC for GO to step 4

If a G3FD exists: √MCC for proc

If no FD: √MCC for GO to perform BFS ENGAGE

EQUIPMENT COOLING MATRIX

AIR-COOLED		WATER-COOLED	
FORCED	FREE-FLOW		
AV BAY 1		AV BAY 1	
GPC 1,4 (1) MLS RF & DECODER 1 AV BAY FAN A,B	BFC 1 (ENGAGE) CICU AA 1,4 TACAN 1 PROXIMITY SW INVERTER DIST & CNTL BRK CNTL 1 SMOKE DET A,B CURRENT SNSR ADTA 1,3	AC INV 1A,1B,1C LCA(FWD) 1 PCA(FWD) 1 MCA(FWD) 1 MDM PL1,OF1, FF1,LF1 DSC OF1 ACCU 1,2 PWR SUPPLY/BATT CHARGER	 MMU 1 RJDF 1A,1B P/L RECORDER PCMMU 1 PDI RADAR ALT 1
AV BAY 2		AV BAY 2	
GPC 2,5 (1) MLS RF & DECODER 2,3 AV BAY FAN A,B	BFC 2,3 (ENGAGE) AA 2,3 TACAN 2 PROXIMITY SW INVERTER DIST & CNTL BRK CNTL 2 SMOKE DET A,B CURRENT SNSRS ADTA 2,4	AC INV 2A,2B,2C LCA(FWD) 2 PCA(FWD) 2 MCA(FWD) 2 MDM PL2,OF2, FF2,FF4 DSC OF2 PL INTEROG 1,2	MMU 2 RJDF 2A,2B PCMMU 2 S-BD PL RF COAX SW OPS RECORDER 1,2 RADAR ALT 2 PSP 1,2
AV BAY 3A		AV BAY 3A	
GPC 3 (1) AV BAY FAN A,B C/W LIMIT MODULE SSOR (2)	S-BAND EQUIP: FM MLTPLXR QUAD ANT SW ASSEMBLY FM SIG PRCSR SW BEAM ANT CNTL ASSY FM RF SWITCH TACAN 3 CURRENT SNSR INVERTER DIST & CNTL SMOKE DET A,B	AC INV 3A,3B,3C LCA(FWD) 3 PCA(FWD) 3 MCA(FWD) 3 MDM FF3,OF3 DSC OF3 NSP 1,2 S-BAND PA 1,2; PRE-AMP 1,2; XPNDR 1,2; FM XMTR 1,2	EBIA (BYPASS SWITCH) COMSEC 1,2,3 UHF EVA XCVR KU-BND EA 1,2 GCIL
		AV BAY 3B	
		MTU KU-BAND SIGNAL PROCESSOR HUD ELECT 1,2	 GPS 2

10/13/04

(1) GPC INSTALLATION REFERS TO CPU/IOP/MEMORY UNIT.

(2) IF FLOWN.

ECLS

Cont next page

EQUIPMENT COOLING MATRIX (Continued)

AIR-COOLED		WATER-COOLED
FORCED	FREE-FLOW	
CABIN		ECLSS EQUIPMENT BAY
MDUs (eleven) CAB FAN A,B IMU 1,2,3 IMU FANS ③ TV MONITORS RCU VSU MCIU IDP 1,2,3,4 MADS RCDR MS & PS STATION	MTRS/LTS/IND C/W ANNUN SPKR UNITS ATUs CAMCORDER COLOR PRINTER PGSC VTR CSA CAB TEMP CNTLR A,B WMS HUMIDITY SEP SMOKE DET: L,R FLT DECK CABIN ADC 1A,1B,2A,2B MCM HUD PDU L,R DDU 1,2,3	WATER PUMP 1A,1B SEC FLIGHT DECK MDM OF4

ECLS

FREON-COOLED			
AFT COLDPLATES			MIDBODY
BAY 4	BAY 5	BAY 6	
LCA-1 PCA-1,4 MCA-1 MDM FA1 OA1 APU CNTLR 1 ATVC ELECT 1 EIU 1 MPS ULL P SC1 ASA 1 RGA 1 RJDA 1 MEC 1 DSC OA1 DBIA 1	LCA-2 PCA-2,5 MCA-2 MDM FA2 OA2 APU CNTLR 2 ATVC ELECT 2 EIU 2 MPS ULL P SC2 ASA 2 RGA 2 MEC 2 DSC OA2 DBIA 2 PT SNSR	LCA-3 PCA-3,6 MCA-3 MDM FA3,4 OA3 APU CNTLR 3 ATVC ELECT 3,4 EIU 3 MPS ULL P SC3 ASA 3,4 RGA 3,4 RJDA 2 MPS DP SC DSC OA3	PCA(MID) 1,2,3 MCA(MID) 1,2,3,4 MDM PM1 RMA 1,2 FEA 1,2 SGSC H2/O2 CRYO HTR 1A,1B,2A,2B FCL 1 PMP A,B 2 PMP A,B FUEL CELLS 1,2,3 MN DA 1,2,3 MIDBODY PIC CNTLR DSC OM1,OM2,OM3

10/13/04

③ IMU FANS ARE LOCATED IN AVIONICS BAY 1 BUT CIRCULATE CABIN AIR RATHER THAN FLOW FROM AVIONICS BAY 1 THROUGH THE IMUs FOR COOLING.

EQUIPMENT COOLING MATRIX

AIR-COOLED		WATER-COOLED
FORCED	FREE-FLOW	
AV BAY 1		AV BAY 1
GPC 1,4 ① MLS RF & DECODER 1 MIDDECK PL ② AV BAY FAN A,B	BFC 1 (ENGAGE) CICU AA 1,4 PROXIMITY SW GPS 1 INVERTER DIST & CNTL BRK CNTL 1 SMOKE DET A,B CURRENT SNSR ADTA 1,3	AC INV 1A,1B,1C LCA(FWD) 1 MMU 1 PCA(FWD) 1 RJDF 1A,1B MCA(FWD) 1 P/L RECORDER MDM PL1,OF1, PCMMU 1 FF1,LF1 PDI DSC OF1 RADAR ALT 1 ACCU 1,2 PWR SUPPLY/BATT CHARGER
AV BAY 2		AV BAY 2
GPC 2,5 ① MLS RF & DECODER 2,3 MIDDECK PL ② AV BAY FAN A,B	BFC 2,3 (ENGAGE) AA 2,3 PROXIMITY SW INVERTER DIST & CNTL BRK CNTL 2 SMOKE DET A,B CURRENT SNSRS ADTA 2,4	AC INV MMU 2 2A,2B,2C RJDF 2A,2B LCA(FWD) 2 PCMMU 2 PCA(FWD) 2 S-BD PL RF MCA(FWD) 2 COAX SW MDM PL2,OF2, OPS RECORDER FF2,FF4 1,2 DSC OF2 RADAR ALT 2 PL INTEROG 1,2 PSP 1,2
AV BAY 3A		AV BAY 3A
GPC 3 ① AV BAY FAN A,B C/W LIMIT MODULE SSOR ②	S-BAND EQUIP: FM MLTPLXR QUAD ANT SW ASSEMBLY FM SIG PRCSR SW BEAM ANT CNTL ASSY FM RF SWITCH GPS 3 CURRENT SNSR INVERTER DIST & CNTL SMOKE DET A,B	AC INV EBIA (BYPASS 3A,3B,3C SWITCH) LCA(FWD) 3 COMSEC 1,2,3 PCA(FWD) 3 UHF EVA XCVR MCA(FWD) 3 KU-BND EA 1,2 MDM FF3,OF3 GCIL DSC OF3 NSP 1,2 S-BAND PA 1,2; PRE-AMP 1,2; XPNDR 1,2; FM XMTR 1,2
		AV BAY 3B
		MTU KU-BAND SIGNAL PROCESSOR HUD ELECT 1,2 GPS 2

07/10/07

① GPC INSTALLATION REFERS TO CPU/IOP/MEMORY UNIT.

② IF FLOWN.

ECLS

Cont next page

EQUIPMENT COOLING MATRIX (Continued)

AIR-COOLED		WATER-COOLED
FORCED	FREE-FLOW	
CABIN		ECLSS EQUIPMENT BAY
MDUs (eleven) CAB FAN A,B IMU 1,2,3 IMU FANS ③ TV MONITORS RCU VSU MCIU IDP 1,2,3,4 MADS RCDR MS & PS STATION	MTRS/LTS/IND C/W ANNUN SPKR UNITS ATUs CAMCORDER COLOR PRINTER PGSC VTR CSA CAB TEMP CNTLR A,B WMS HUMIDITY SEP SMOKE DET: L,R FLT DECK CABIN ADC 1A,1B,2A,2B MCM HUD PDU L,R DDU 1,2,3	WATER PUMP 1A,1B SEC FLIGHT DECK MDM OF4

ECLS

FREON-COOLED			
AFT COLDPLATES			MIDBODY
BAY 4	BAY 5	BAY 6	
LCA-1 PCA-1,4 MCA-1 MDM FA1 OA1 APU CNTLR 1 ATVC ELECT 1 EIU 1 MPS ULL P SC1 ASA 1 RGA 1 RJDA 1 MEC 1 DSC OA1 DBIA 1	LCA-2 PCA-2,5 MCA-2 MDM FA2 OA2 APU CNTLR 2 ATVC ELECT 2 EIU 2 MPS ULL P SC2 ASA 2 RGA 2 MEC 2 DSC OA2 DBIA 2 PT SNSR	LCA-3 PCA-3,6 MCA-3 MDM FA3,4 OA3 APU CNTLR 3 ATVC ELECT 3,4 EIU 3 MPS ULL P SC3 ASA 3,4 RGA 3,4 RJDA 2 MPS DP SC DSC OA3	PCA(MID) 1,2,3 MCA(MID) 1,2,3,4 MDM PM1 RMA 1,2 FEA 1,2 SGSC H2/O2 CRYO HTR 1A,1B,2A,2B FCL 1 PMP A,B 2 PMP A,B FUEL CELLS 1,2,3 MN DA 1,2,3 MIDBODY PIC CNTLR DSC OM1,OM2,OM3

10/13/04

③ IMU FANS ARE LOCATED IN AVIONICS BAY 1 BUT CIRCULATE CABIN AIR RATHER THAN FLOW FROM AVIONICS BAY 1 THROUGH THE IMUs FOR COOLING.

WARNING
If -dP/dT is 0.55 psi/min (OSH), loss of vehicle atmosphere imminent
When PPO2 < 2.2, emergency breathing apparatus reqd (dP/dT x 0.2 ~ PPO2 decay rate)
If, after alarm, O2(N2) flow > 1.0 lb/hr: Assume flow rate exceeds 5.0 lb/hr (OSH)

If docked to ISS and hatches open:

1. Perform JOINT EMERGENCY EGRESS (SODF: JOINT OPS, Cue Card) to isolate ISS, then:
2. If dP/dT EQ positive or zero (ISS leak), √MCC >>

MO10W 3. 14.7 CAB REG INLET SYS 1,SYS 2 vlv (two) – CL

If orbiter dP/dT EQ positive or zero:

4. Go to MAL, ECLS, 6.2a, O2(N2) FLOW ↑ [4] >>

NOTE

If orbiter dP/dT EQ positive or zero after any leak isolation step, √MCC

LEAK ISOLATION

L2 5. CAB RELIEF A – CL (tb-CL),pause,
B – CL (tb-CL)

6. √VENT ISOL – ctr (tb-bp)
√VENT – ctr (tb-bp)

ML31C 7. √VAC VENT ISOL VLV BUS SEL – MNA
CNTL – CL (tb-CL)

Side Hatch 8. NEG PRESS RLF vlv cover (two) – push firmly

WCS 9. Remove urinal hose from hose block

10. Check center hole (between hose block filters) in hose block for airflow

If airflow detected (EMU drain induced cabin leak):

11. Using Gray Tape, block center hole in hose block (EMU drain)
12. Go to MAL, ECLS, 6.2b, CABIN PRES ↑↓ [66] >>

13. Reinstall urinal hose

Ext A/L 14. NEG PRESS RLF vlv cover (two) – push firmly

Cont next page

If SH HATCH open:

15. Perform SH CABIN LEAK ISOLATION (Cue Card)

Middeck flr 16. Disconnect airlock flex duct from cab floor, stow

MO13Q 17. AIRLK FAN A(B) – OFF

Inner Hatch 18. Close INNER HATCH:

Position handle to preclosing posn per decal
Hatch – rotate about hinge and push
Handle – CCW to LATCH
Lock lever to LOCKED

Remove INNER HATCH Equal vlv cap (two)
Equal vlv (two) – OFF

Middeck flr 19. Install diffuser cap on cab floor outlet (when time permits)

If dP/dT EQ positive or zero (A/L leak; possible loss of EVA capability and loss of access to ISS/SH):

L2 20. CAB RELIEF (two) – ENA (tb-ENA)

If 14.7 psi ops:

21. O2/N2 CNTLR VLV SYS 1(2) – AUTO

MO10W 22. 14.7 CAB REG INLET SYS 1(SYS 2) vlv – OP

√O2 REG INLET SYS 1(SYS 2) vlv – OP

ML31C 23. VAC VENT ISOL VLV CNTL – OP (tb-OP)

24. √MCC for SH deactivation steps >>

> CAUTION
> ODS avionics require 8 psia or greater for cooling. √MCC regarding possible repress of ODS prior to ISS undocking

If dP/dT EQ still negative:

UNISOLATABLE ORBITER LEAK:

PREPARE FOR DEORBIT

Utilize SH(A/L) Atmosphere

> CAUTION
> Perform steps 25-28 before determining type of deorbit, to avoid volume-based nomograph errors

Inner Hatch 25. INNER HATCH Equal vlv (two) – EMER (vlvs remain in EMER for duration of flt)

Cont next page

If Spacehab:

26. Open INNER HATCH per decal

TNL ADP
Inner Hatch

27. SH HATCH Equal vlv (two) – EMER
28. Close INNER HATCH:
    - Position handle to preclosing posn per decal
    - Hatch – rotate about hinge and push
    - Handle – CCW to LATCH
    - Lock lever to LOCKED

    Deactivate Spacehab:

    SM 214 SHAB ACT/DEACT

    29. FANS ARS OFF – ITEM 61 EXEC (*****)
    30. Perform SPACEHAB EMERGENCY DEACT, steps 1-8,10 (Cue Card)

Determine Type of Deorbit

Determine latest poss TIG, Tmax, and avail landing sites using PGSC (preferred) or NOMOGRAPHS, 4-8

If docked to ISS and TIG > 1 hr 30 min and Orbiter Only Tmax does not support PLS, perform UTILIZE ISS ATMOSPHERE, (SODF: JOINT OPS, EMERGENCY RESPONSE) concurrently with remaining steps below

If TIG < 2 hr 40 min and not Orb 2,3 deorbit:

31.	CM1,CM2	If docked to ISS, perform JOINT EXPEDITED UNDOCKING AND SEPARATION (SODF: JOINT OPS, EMERGENCY RESPONSE). If utilizing ISS atmosphere, delay vestibule depress until CDR GO (ISS Press ≅ 9.5 psia)
32.	CM1,CM2	Perform EMERGENCY DEORBIT PREP/ENTRY (CONT DEORB, EMERGENCY)
	CM3	Continue with Cabin Pressure Maintenance

If TIG > 2 hr 40 min or Orb 2,3 deorbit:

33.	CM1,CM2	Perform LOSS OF CAB PRESS (PWRDN)
	CM3	Continue with Cabin Pressure Maintenance
		√MCC for ISS undocking

Cont next page

Cabin Pressure Maintenance

If -dP/dT EQ > 0.35 (0.18 if SH):

C5 34. DIRECT O2 vlv – OP

C6,MO32M, MO69M 35. Don LES, open LEH O2 vlvs, check tabs, visor – cl, LES O2 – ON

L2 36. O2/N2 CNTLR VLV SYS 1,2 (two) – OP (N2)

R1 37. O2 MANF VLV TK1,TK2 (two) – OP (tb-OP)
TK1,TK2,TK3 HTRS A (three) – AUTO

If any O2 QTY > 60%:

38. (Aff) O2 TK HTR B – AUTO

MO10W 39. O2 REG INLET SYS 1 vlv – CL
2 vlv – CL >>

Flow Max O2

R1 40. O2 MANF VLV TK1,TK2 (two) – OP (tb-OP)
TK1,TK2,TK3 HTRS A (three) – AUTO

If any O2 QTY > 60%:

41. (Aff) O2 TK HTR B – AUTO

C5 42. DIRECT O2 vlv – OP

L2 43. O2/N2 CNTLR VLV SYS 1 – CL (O2)
2 – OP (N2)

O2 XOVR SYS 1 – CL
√2 – OP

MO10W 44. 14.7 CAB REG INLET SYS 1 vlv – OP
2 vlv – CL

O2 REG INLET SYS 1 vlv – OP
2 vlv – CL

WARNING
Maintain O2 concentration < 29% (CABIN PRESS > 10.3) or PPO2 < 3.0 (CABIN PRESS ≤ 10.3)
When PPO2 < 2.2, emergency breathing apparatus reqd

Manage O2 Levels

MO10W,C5 Using O2 REG INLET SYS 1 vlv and DIRECT O2 vlv:

When CABIN PRESS > 10.3:

45. Maintain PPO2 > 2.2 and O2 conc < 29%

When CABIN PRESS ≤ 10.3:

46. Maintain PPO2 between 2.2 and 3.0

When PPO2 < 2.2:

C6,MO32M, MO69M 47. Don LES, open LEH O2 vlvs, check tabs, visor – cl, LES O2 – ON

MO10W 48. O2 REG INLET SYS 1 vlv – CL

C5 49. DIRECT O2 vlv – CL

L2 50. O2 XOVR SYS 1 – OP

Cont next page

8 PSI CABIN MAINTENANCE (Flow N2)

When CABIN PRESS reaches 8:

51. Continue O2 mgmt per step 46
52. Verify time to N2 depletion, perform N2 DEPLETION GRAPH, 4-10, then:

If CABIN PRESS does not remain ≥ 7.8 psi (max N2 flow reqd):

MO10W 53. 14.7 CAB REG INLET SYS 1 vlv – CL
L2 54. O2/N2 CNTLR VLV SYS 1,2 (two) – OP (N2)
O2 XOVR SYS 1,2 (two) – OP
MO10W 55. REG INLET SYS 1,SYS 2 vlv (two) – CL

56. Reconfig C/W parameters:

PARAMETER NAME	C/W CH	H/W C/W LO V(LO EU)	ENA/INH
CAB P	4	1.90(7.56)	
O2 FLOW 1	14		INH
2	24		INH
PPO2 A	34	2.20(2.20)	
B	44	2.20(2.20)	
N2 FLOW 1	54		INH
2	64		INH

57. Once PPO2 < 3.00, reconfig C/W parameters:

PARAMETER NAME	C/W CH	H/W C/W HI V(HI EU)
CAB PPO2 A	34	3.00(3.00)
B	44	3.00(3.00)

>>

Cont next page

TIME TO 8 PSIA NOMOGRAPH

Orbiter + Ext A/L

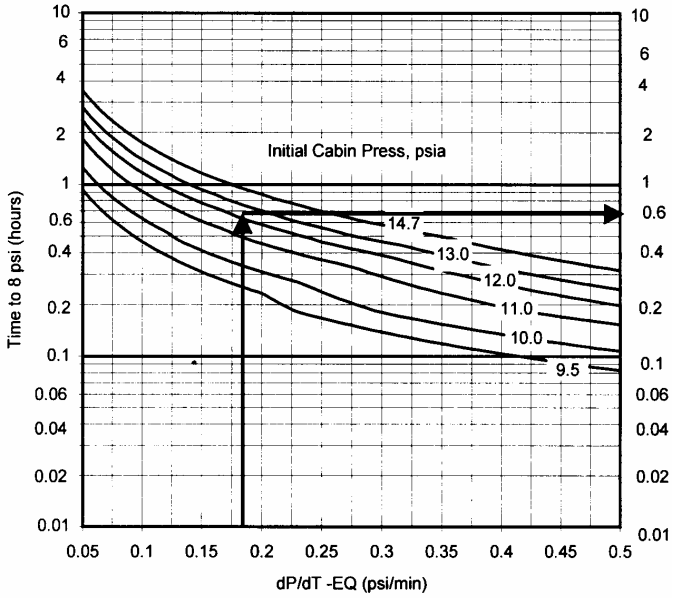

TIME AT 8 PSIA NOMOGRAPH

Orbiter + Ext A/L

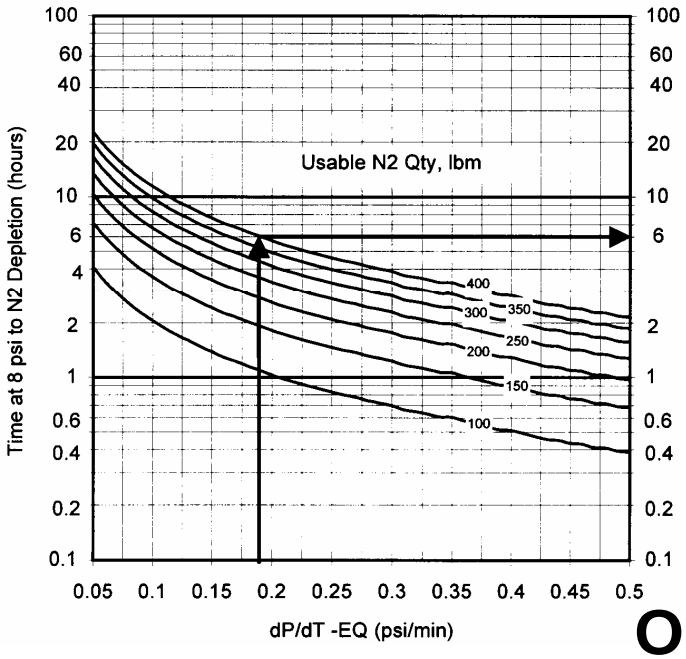

8 PSI CABIN MAINTENANCE (Flow N2)

When CABIN PRESS reaches 8:

51. Continue O2 mgmt per step 46
52. Verify time to N2 depletion, perform N2 DEPLETION GRAPH, 4-10, then:

If CABIN PRESS does not remain ≥ 7.8 psi (max N2 flow reqd):

MO10W 53. 14.7 CAB REG INLET SYS 1 vlv – CL
L2 54. O2/N2 CNTLR VLV SYS 1,2 (two) – OP (N2)
O2 XOVR SYS 1,2 (two) – OP
MO10W 55. REG INLET SYS 1,SYS 2 vlv (two) – CL

56. Reconfig C/W parameters:

PARAMETER NAME	C/W CH	H/W C/W LO V(LO EU)	ENA/INH
CAB P	4	1.90(7.56)	
O2 FLOW 1	14		INH
2	24		INH
PPO2 A	34	2.20(2.20)	
B	44	2.20(2.20)	
N2 FLOW 1	54		INH
2	64		INH

57. Once PPO2 < 3.00, reconfig C/W parameters:

PARAMETER NAME	C/W CH	H/W C/W HI V(HI EU)
CAB PPO2 A	34	3.00(3.00)
B	44	3.00(3.00)

>>

Cont next page

TIME TO 8 PSIA NOMOGRAPH

Orb + Tunnel Extension + Ext A/L + Tunnel Adapter + SpaceHab w/Tunnel/Extension

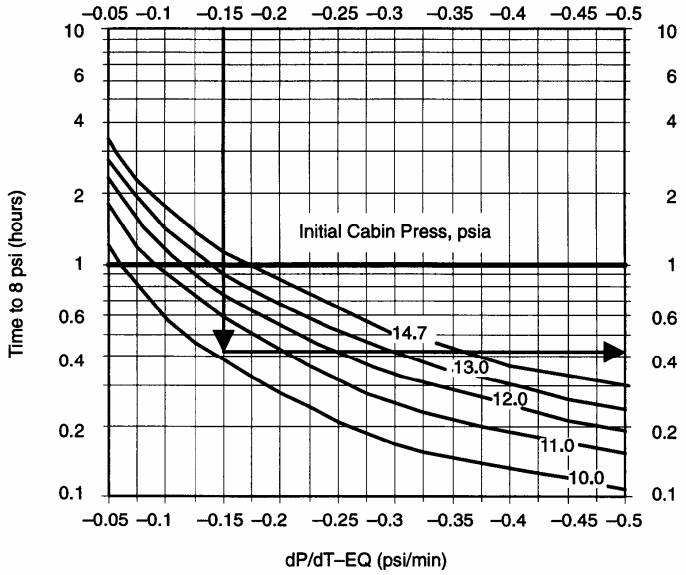

TIME AT 8 PSIA NOMOGRAPH

Orb + Tunnel Extension + Ext A/L + Tunnel Adapter + SpaceHab w/Tunnel/Extension

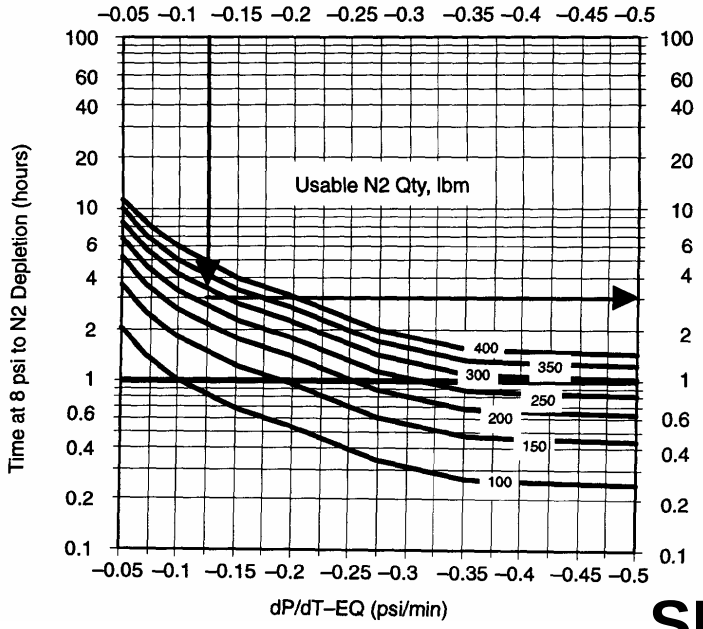

Tmax Computation

SM 66 ENVIRONMENT

Log:

dP/dT EQ _____ N2 QTY 1 _____

CAB P _____ N2 QTY 2 _____

MET _____

Determine latest poss TIG, Tmax, and avail landing sites using PGSC (preferred)/applicable NOMOGRAPH.

If docked to ISS, determine latest poss TIG and Tmax utilizing ISS atmosphere using PGSC, or if PGSC unavail, use Tmax DETERMINATION for UTILIZE ISS ATMOSPHERE (SODF: JOINT OPS, EMERGENCY RESPONSE) in conjunction with NOMOGRAPH (on facing page) to determine Tmax

	Orbiter Only	**Utilizing ISS Atmosphere (if reqd)**
Time at 9.5 psi (from SODF: JOINT OPS, UTILIZE ISS ATMOSPHERE, EMERGENCY RESPONSE)	N/A	_____ hrs
Time to 8 psi (facing page)	_____ hrs (from current cab press)	_____ hrs (from 9.5 psi)
Time at 8 psi (facing page) (N2 Depletion)	+ _____ hrs	+ _____ hrs
Total Avail Time	= _____ hrs	= _____ hrs
Current MET	+ ____/ ___ : ___	+ ____/ ___ : ___
Latest TD MET	= ____/ ___ : ___	= ____/ ___ : ___
Time, TIG to TD	- 0 / 0 1 : 0 0	- 0 / 0 1 : 0 5
Latest TIG,Tmax (MET)	= ____/ ___ : ___	= ____/ ___ : ___

Landing Site/TIG _____/ _____

NOMOGRAPH Basis:
O2 Flow: on/off at 50 lb/hr after 10 min, with PPO2 > 2.2 psi, % O2 < 29
Orbiter Volume = 2703 ft^3
Orbiter + SHM = 5255 ft^3

CAUTION

If determining Tmax utilizing ISS atmosphere and ISS hatches OPEN, √MCC for proper dP/dT (Hatch OP dP/dT EQ = {Orbiter Volume/Total Stack Volume} x Hatch CL dP/dT EQ)

03/18/05

N2 DEPLETION GRAPH

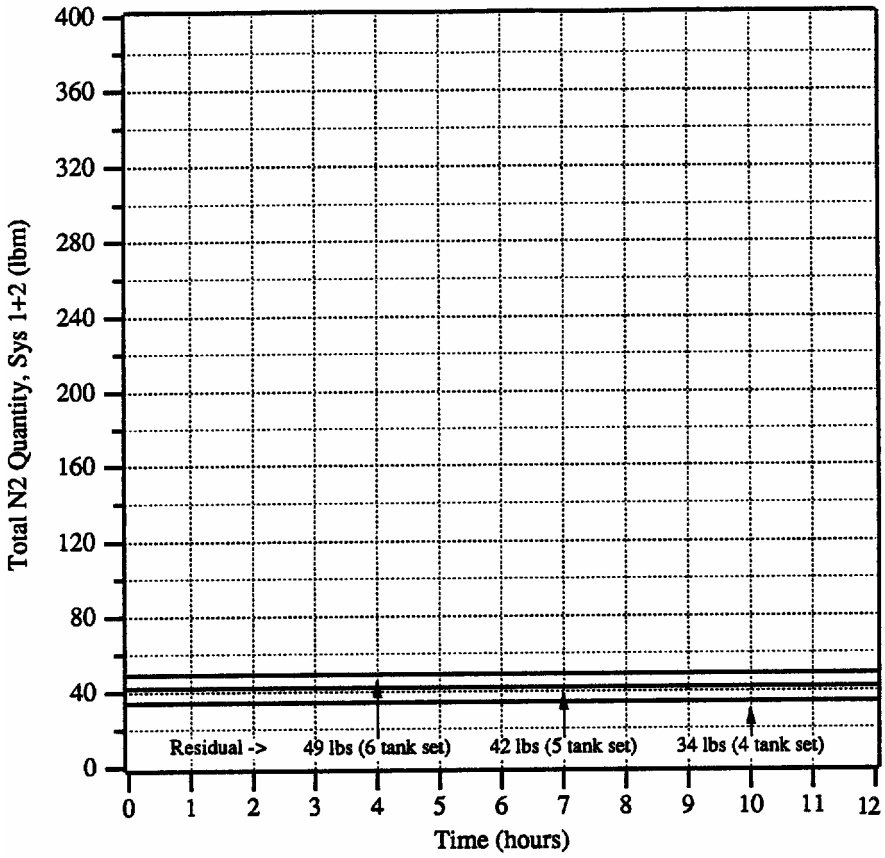

MET ____/____:____ at 8 psia

1. When cabin pressure reaches 8 psia, record MET above, plot total N2 Qty (Sys 1+2) from Spec 66 and start timer
2. Draw point on graph where selected TD time and appropriate residual line intersect
3. Draw a line connecting the initial N2 Qty with point defined in step 2
4. Plot N2 Qty points at various time intervals to verify that N2 will support planned TD time. Note that dispersions in use rate over short time periods are expected
5. If actual N2 use rate is greater than prediction line, select earlier TD time

H2O TK QTY LOW AND DECR

SM 66 ENVIRONMENT

L1 1. If PLBD open: FLASH EVAP CNTLR PRI A,B – OFF
MO10W 2. H2O TK N2 ISOL vlv (two) – CL

NOTE
Audible vent and 'S66 WASTE H2O PRES' alert for WASTE H2O PRESS ↓ when performing step 3

ML26C 3. SPLY H2O GN2 TK VENT vlv – VENT
√TKA SPLY vlv – OP
When WASTE H2O PRESS ~0 psig (1-2 min):
4. √MCC

EVAP OUT T HIGH

SM 88 APU/ENVIRON THERM
SM SYS SUMM 2

If temp high in only one loop (snsr failed) >>
If PLBD open and RADS in use:
1. Go to MAL, ECLS, 6.4a, EVAP OUT T ↑↓ 1 >>
If PLBD closed or if PLBD open in RAD BYP:
L1 2. FLASH EVAP CNTLR PRI A(B) – OFF
B(A) – ON (wait 30 sec)
3. If EVAP OUT T decr: (PRI A(B) CNTL lost) >>
If EVAP OUT T not decr:
L1 4. FLASH EVAP CNTLR PRI B(A) – OFF
SEC – ON (Hi Load Evap ena)
5. Minimize ltg (wait 30 sec)

Cont next page

If EVAP OUT T decr:
If in deorb prep:
O7 6. √TACAN MODE (three) – OFF
O8 7. √RDR ALTM (two) – OFF
8. √MLS (three) – OFF
L1 9. TOP EVAP HTR NOZ (two) – OFF
DUCT sel – OFF >>
If not in deorb prep >>
If EVAP OUT T not decr (Sec Hi Load failed):
L1 10. HI LOAD EVAP – OFF (Topping Evap ena)
C3 11. MSTR MADS PWR – OFF (wait 30 sec)
If EVAP OUT T decr:
12. Go to LOSS OF HI LOAD EVAP (PWRDN), 10-33 >>
If EVAP OUT T not decr (all FES lost):
CDR establish RAD flow:
CDR 13. Perform steps 16 thru 19
If PLBD closed, MS open doors ASAP:
MS 14. Perform EMER PLBD OPENING, then:
If in deorb prep:
15. Go to LOSS OF FES (PWRDN), 10-69 >>
If not in deorb prep >>

Establish RAD flow:
CDR L1 16. RAD BYP VLV MODE (two) – AUTO
CNTLR LOOP (two) – AUTO A(B)
17. FLASH EVAP CNTLR SEC – OFF
Wait 90 sec
18. √RAD BYP VLV tb (two) – RAD
√CNTLR OUT TEMP – NORM
19. HI LOAD DUCT HTR sel – OFF
TOP EVAP HTR NOZ (two) – OFF
DUCT sel – OFF

OV103,104

H2O TK QTY LOW AND DECR

SM 66 ENVIRONMENT

L1 1. If PLBD open: FLASH EVAP CNTLR PRI A,B – OFF
MO10W 2. H2O TK N2 ISOL vlv (two) – CL

NOTE
Audible vent and 'S66 WASTE H2O PRES' alert for WASTE H2O PRESS ↓ when performing step 3

ML26C 3. SPLY H2O GN2 TK VENT vlv – VENT
√TKA SPLY vlv – OP
When WASTE H2O PRESS ~0 psig (1-2 min):
4. √MCC

EVAP OUT T HIGH

SM 88 APU/ENVIRON THERM
SM SYS SUMM 2

If temp high in only one loop (snsr failed) >>
If PLBD open and RADS in use:
1. Go to MAL, ECLS, 6.4a, EVAP OUT T ↑↓ 1 >>
If PLBD closed or if PLBD open in RAD BYP:
L1 2. FLASH EVAP CNTLR PRI A(B) – OFF
B(A) – ON (wait 30 sec)
3. If EVAP OUT T decr: (PRI A(B) CNTL lost) >>
If EVAP OUT T not decr:
L1 4. FLASH EVAP CNTLR PRI B(A) – OFF
SEC – ON (Hi Load Evap ena)
5. Minimize ltg (wait 30 sec)

Cont next page

If EVAP OUT T decr:
If in deorb prep:
O8 6. √RDR ALTM (two) – OFF
7. √MLS (three) – OFF
L1 8. TOP EVAP HTR NOZ (two) – OFF
DUCT sel – OFF >>
If not in deorb prep >>
If EVAP OUT T not decr (Sec Hi Load failed):
L1 9. HI LOAD EVAP – OFF (Topping Evap ena)
C3 10. MSTR MADS PWR – OFF (wait 30 sec)
If EVAP OUT T decr:
11. Go to LOSS OF HI LOAD EVAP (PWRDN), 10-33 >>
If EVAP OUT T not decr (all FES lost):
CDR establish RAD flow:
CDR 12. Perform steps 15 thru 18
If PLBD closed, MS open doors ASAP:
MS 13. Perform EMER PLBD OPENING, then:
If in deorb prep:
14. Go to LOSS OF FES (PWRDN), 10-69 >>
If not in deorb prep >>

Establish RAD flow:
CDR L1 15. RAD BYP VLV MODE (two) – AUTO
CNTLR LOOP (two) – AUTO A(B)
16. FLASH EVAP CNTLR SEC – OFF
Wait 90 sec
17. √RAD BYP VLV tb (two) – RAD
√CNTLR OUT TEMP – NORM
18. HI LOAD DUCT HTR sel – OFF
TOP EVAP HTR NOZ (two) – OFF
DUCT sel – OFF

EMER PLBD OPENING

R13L 1. PL BAY DR SYS (two) – ENA

CRTX X: BFS, SM 63 PL BAY DOORS

2. AC POWER ON – ITEM 1 EXEC (*****)
   AUTO MODE SEL – ITEM 3 EXEC (*****)
   PBD SW BYPASS – ITEM 14 EXEC (*****)
   OPEN – ITEM 15 EXEC (*****)
3. √CENTER LATCHES 5-8,9-12 (two) – blank,OP (~20 sec)
   √1-4,13-16 (two) – blank,OP (~20 sec)
   √STBD FWD,AFT LATCHES (two) – blank,OP (~30 sec)
   √DOOR – RDY,blank,OP (~63 sec)
   √PORT FWD,AFT LATCHES (two) – blank,OP (~30 sec)
   √DOOR – RDY,blank,OP (~63 sec)
4. STOP – ITEM 16 EXEC (*****)
   PBD SW BYPASS – ITEM 14 EXEC (no *****)
   AC POWER OFF – ITEM 2 EXEC (*****)

R13L 5. PL BAY DR SYS (two) – DSBL

1. If temp low in only one loop (snsr failed) >>
L1 2. FREON PUMP LOOP 1,2 (two) – OFF
3. H2O PUMP LOOP 1,2 (two) – ON
4. FLOW PROP VLV LOOP 1,2 (two) – PL HX (tb-PL)
5. RAD CNTLR OUT TEMP – HI
6. FLASH EVAP CNTLR PRI A,B,SEC (three) – OFF
L2 7. O2 SYS 1,2 SPLY (two) – CL (tb-CL)

If FREON LOOP RAD OUT T LOW:
L1 8. (Unaff) FREON PUMP – B
L2 9. (Unaff) O2 SYS SPLY – OP (tb-OP)
10. Go to FREON LOOP RAD OUT T LOW, step 9 >>

If FREON LOOP 1(2) leaking (Accum Qty decr ≥ 1.5%/min):
L1 11. FREON PUMP LOOP 1,2 (two) – B

If after 60 sec EVAP OUT T = 'L':
12. RAD BYP VLV MODE 1,2 (two) – MAN
13. MAN SEL 1,2 (two) – BYP (tb-BYP 3 sec)
14. Go to MAL, ECLS, 6.4a, EVAP OUT T ↑↓ 47 >>

If FREON LOOP 1(2) not leaking:

If no comm:
15. FREON PUMP LOOP 1,2 (two) – B
NH3 CNTLR A,B (two) – SEC/ON

If after 60 sec EVAP OUT T = 'L':
16. RAD BYP VLV MODE 1,2 (two) – MAN
17. MAN SEL 1,2 (two) – BYP (tb-BYP 3 sec)
18. Go to MAL, ECLS, 6.4a, EVAP OUT T ↑↓ 46

If the FC H2O PRI LN T and associated FC H2O VLV T are converging or within 5 degF of each other for multiple FCs:

R11L — If SUPPLY H2O TKB INLET and XOVR VLV closed (tb-CL or bp):

ML86B:A
1. cb MNB SPLY H2O TKB INLET – cl
2. MNC SPLY H2O XOVR VLV – cl

R11L
3. SPLY H2O TKA OUTLET – CL (tb-CL)
4. TKB INLET – OP (tb-OP)
5. XOVR VLV – OP (tb-OP)
6. √SPLY H2O TKA,TKB,TKC INLET (three) – OP (tb-OP)
7. √XOVR VLV – OP (tb-OP)

ML31C
8. √SPLY H2O TKD INLET – OP (tb-OP)

CRT — If SUPPLY H2O PRESS decr or < 40: >>

If SUPPLY H2O PRESS not decr or ≥ 40:

L1
9. FLASH EVAP CNTLR PRI A,B,SEC (three) – OFF
10. RAD CNTLR OUT TEMP – HI

O1 — When EVAP OUT T ~50:

L1
11. FLASH EVAP CNTLR PRI B – ON
12. Go to MAL, ECLS, 6.5d, H2O SPLY PRESS ↑ [1] >>

Else:

13. Go to MAL, ECLS, 6.5d, H2O SPLY PRESS ↑ [3]

OPCL/ALL/GEN M

1. Switch pumps in aff loop(s)

If flow still low in only one loop:

2. Go to MAL, ECLS, 6.4b, FREON FLOW LOW [1] >>

If flow still low in both loops:

L1 3. FLOW PROP VLV LOOP 1,2 (two) – ICH (tb-ICH)

If not in OPS 2:

Prepare to deorb:

4. FREON PUMP LOOP 1,2 (two) – OFF
L2 5. √O2 SYS 1,2 SPLY (two) – OP (tb-OP)
C3 6. MSTR MADS PWR – OFF
R11U 7. FC PURGE HTR – ON
VLVS (three) – OP
8. Go to LOSS OF 2 FREON LOOPS (PWRDN), 10-49 >>

If in OPS 2:

If AFT cp FLOW in both loops < 200 lb/hr:

Prepare to deorb:

9. If AFT cp FLOW < 100 lb/hr:
L1 FREON PUMP LOOP 1,2 (two) – OFF
L2 10. √O2 SYS 1,2 SPLY (two) – OP (tb-OP)
C3 11. MSTR MADS PWR – OFF
R11U 12. FC PURGE HTR – ON
VLVS (three) – OP
13. Go to LOSS OF 2 FREON LOOPS (PWRDN), 10-49 >>

If AFT cp FLOW in either loop > 200 lb/hr:

14. Go to MAL, ECLS, 6.4b, FREON FLOW LOW [1]

FREON LOOP RAD OUT T LOW

SM 88 APU/ENVIRON THERM
SM SYS SUMM 2

1. If EVAP OUT T not decr after 60 sec (snsr failed) >>
L1 2. (Aff) FREON PUMP – OFF
3. H2O PUMP LOOP 1,2 (two) – ON
If no PL H2O Loop present:
4. FLOW PROP VLV LOOP 1,2 (two) – PL HX (tb-PL)
If PL H2O Loop present:
5. FLOW PROP VLV LOOP 1,2 (two) – ICH (tb-ICH)
6. Activate PL H2O Loop
L2 7. (Aff) O2 SYS SPLY – CL
L1 8. FLASH EVAP CNTLR PRI A,B,SEC (three) – OFF
9. (Aff) RAD BYP VLV MODE – MAN
10. CNTLR LOOP – AUTO B
After 10 sec:
11. (Aff) RAD BYP VLV MODE – AUTO
12. (Aff) FREON PUMP LOOP – B
13. √(Aff) RAD BYP VLV tb – RAD
If RAD OUT T LOW continues:
14. (Aff) FREON PUMP LOOP – OFF
15. √MCC (mult failures) >>
If FES reqd:
16. Perform TOPPING FES STARTUP (ORB OPS, ECLS), then:
L2 17. (Aff) O2 SYS SPLY – OP

FREON LEAK

SM 88 APU/ENVIRON THERM
BFS SM 0 THERMAL

CRT If FREON LOOP ACCUM QTY decr, then immediately:
L2 1. FREON ISOL MODE – MAN
2. (Aff) FREON ISOL LOOP – ISOL (hold for 5 sec)
3. Go to MAL, ECLS, 6.4f, ACCUM QTY ↓ 11

LEAKING/EMPTY HALON BOTTLE

If docked to ISS and hatches open:

1. Perform JOINT EMERGENCY EGRESS (SODF: JOINT OPS, Cue Card) to isolate ISS, then:

If FIRE SUPPR AV BAY 1(2,3) pb lt on:

2. Go to POST-FIRE CABIN CLEANUP, steps 16-24 only for Av Bay 1(2,3) >>

If Portable Halon Bottle leaking:

3. Position Halon bottle up to Av Bay 3 fire port. Secure body position as reqd

NOTE

Halon discharge will be propulsive

4. Discharge portable FIRE EXTGHR into Av Bay 3 fire port. Full discharge will require 90 sec. Report actual discharge duration to MCC
5. Stow empty bottle (Wet Trash)
6. Go to POST-FIRE CABIN CLEANUP, steps 16-24 only for Av Bay 3 >>

ODS POST-FIRE ACTIONS

Continue from ODS VOLUME FIRE/SMOKE (Cue Card), on MCC call

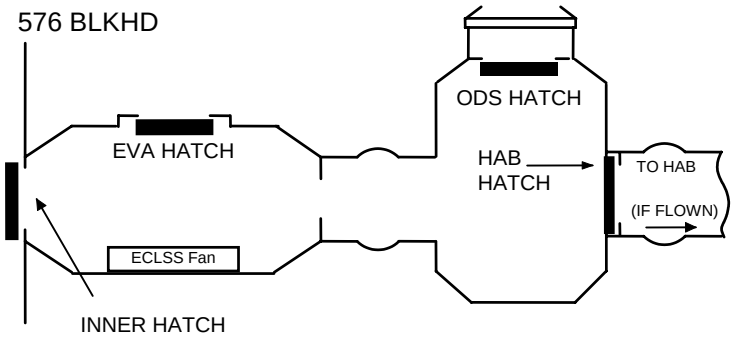

CONFIG A

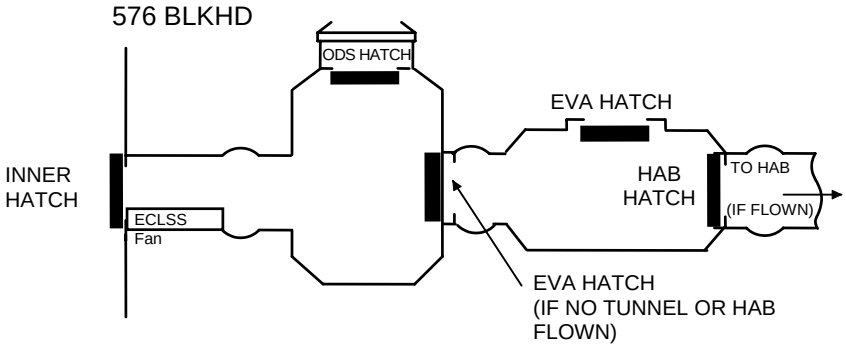

CONFIG B

Cont next page

CM1	1.	Don QDM with 14-ft extension O2/Comm line All other crewmembers: Don QDMs

NOTE

CM2 can perform cab air monitoring per MAL, ECLS FRP-2, POST-FIRE CABIN CLEANUP CONTINUATION at any time

C6,MO32M, MO69M	2.	√LEH O2 vlv (eight) – OP
C7	3.	√LEH O2 SPLY 1,2 vlv (two) – OP
MO10W	4.	14.7 CAB REG INLET SYS 1(SYS 2) vlv – CL
Inner Hatch	5.	Untether Equal vlv cap (one) from INNER HATCH vlv, for use in step 6 Open HATCH per decal

NOTE

Exit airlock volume IMMED after step 6 complete. Expect cab dP/dT msg

ON CLOSEST HATCH EXPOSED TO VACUUM,

Hatch	6.	Equal vlv cap (one) – vent,remove Equal vlv (one) – NORM, then IMMED INNER HATCH Equal vlv cap (one) – install onto HATCH Equal vlv
Inner Hatch	7.	Close HATCH: Position handle to preclosing posn per decal Hatch – rotate about hinge and push Handle – CCW to LATCH Lock lever to LOCKED
CRT	8.	SM 177 EXTERNAL AIRLOCK

NOTE

Expect 'S177 EXT A/L PRES' msg

When EXT AIRLOCK P ≅ 0, on MCC GO,

Inner Hatch	Equal vlv (two) – EMER

NOTE

Expect poss 'S66 CABIN PRES', PPO2 A(B) msgs and KLAXON

Cont next page

CM1	9.	When ΔP across INNER HATCH < 0.5 psi, Open HATCH per decal, then IMMED
	ON CLOSEST HATCH EXPOSED TO VACUUM,	
Hatch	10.	Equal vlv cap (two) – remove Equal vlv (two) – OFF Equal vlv cap (two) – reinstall orig vlv caps
Inner Hatch	11.	Retether,reinstall orig Equal vlv cap (one)
CM2	12.	Perform cab air monitoring per MAL, ECLS FRP-2, POST-FIRE CABIN CLEANUP CONTINUATION if not already done. Do not perform cab cleanup unless CPA readings out of limits. On MCC call, doff QDMs
	13.	On MCC call, ARLK Fan and ODS avionics may be repwrd, PCS reconfigured, and PL ISOL vlv – OP (cap removed)

POST-FIRE CABIN CLEANUP (Cab and Av Bay Fires)

Continue from FIRE/SMOKE Cue Card:

NOTE
This proc is to be performed
simo by two crewmembers

CM1 L1

1. √CAB FAN A(B) – ON
2. Unstow CSA-CP
3. MODE pb – press, hold until 'RELEASE' displayed; wait ~1 min for nominal display
4. Sampling Pump sw – ON
5. Monitor cab atmosphere in vicinity of fire and report results to MCC

If HCN > 1.8, HCL > 2.0, or CO > 18 ppm:

LiOH Box

6. If HCL < 5 ppm, install ATCO and one fresh LiOH canister
7. If HCL > 5 ppm, install two fresh LiOH canisters

L1 MD44F

8. CAB TEMP CNTLR – OFF
   Pin Cab temp cntl act link – FULL COOL

ML86B:B MA73C:E

9. √cb MNA,MNB WCS CNTLR (two) – cl
   √AC1,2 WCS FAN SEP 1,2 (six) – cl

WCS

10. √FAN SEP SEL sw – 1

If Av Bay 1 Fire:

11. HOSE BLOCK to SEP 2
12. FAN SEP SEL sw – 2
13. MODE – COMMODE/MANUAL/EMU
14. COMMODE CNTL – PULL UP
    – PUSH FWD
15. Go to MAL, ECLS FRP-2, POST-FIRE CABIN CLEANUP CONTINUATION

CM2

If Av Bay fire, set up for Av Bay purge:

If docked with ISS:

16. √MCC for attitude control handover
17. Obtain from Cont Hose & Cable Kit (Window Shade Bag):
    - Free Fluid Nozzle
    - 20-ft Y/Y Hose
    - Gray Tape
18. Connect Free Fluid Nozzle to Y/Y Hose
19. Insert tip of Free Fluid Nozzle into fire port of Av Bay
20. Secure nozzle and hose with Gray Tape

Cont next page

If attitude control handover reqd:

21. √Handover complete prior to initiating purge in following step

WCS

22. Mate free end of Y/Y Hose to Vacuum Vent QD

23. √VAC VLV – OP

ML86B:A :B

24. √cb MNA(MNB) H2O LINE HTR A(B) – cl
    √MNA,MNB VAC VENT ISOL VLV (two) – cl
    √MNB VAC VENT NOZ HTR – cl

ML31C

25. √VAC VENT ISOL VLV BUS SEL – MNA
    √NOZ HTR – ON
    √ISOL VLV CNTL – OP (tb-OP)

26. Report to MCC: "Av Bay purge is initiated"

ISS C&W TOX ATM SM 211 ISS C&W

If docked to ISS and hatches open:

1. Perform JOINT EMERGENCY EGRESS (SODF: JOINT OPS, Cue Card) to isolate ISS, then:

If ISS AMMONIA LEAK:

2. Go to MAL, ECLS FRP-5, CABIN AMMONIA CONTAMINATION CLEANUP (ISS AMMONIA LEAK) >>

√MCC for further actions

PRESSURE CONTROL SYSTEM
ORBIT

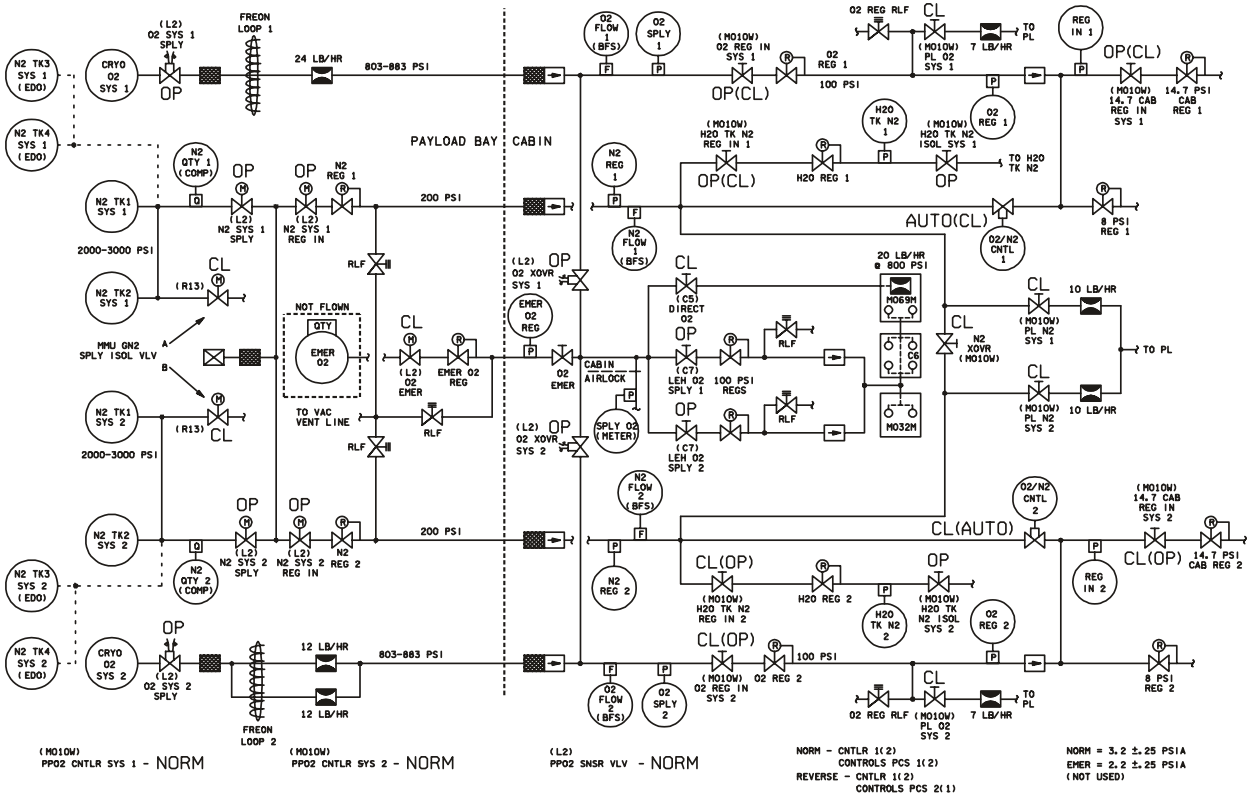

ELECTRICAL POWER SYSTEM

EPS

MN BUS UNDERVOLTS/FC VOLTS

SM SYS SUMM 1

If MN VOLTS < 26.4, FC VOLTS < 26.6, FC AMPS > 480 (2 of 3) (short or degraded FC):

1. MSTR MADS PWR – OFF

If aff FC/MN BUS tied:

2. Untie buses

If short eliminated and MN bus not pwrd after untie:

3. Go to aff MN BUS LOSS ACTION (MN bus or tie bus short) >>

If short eliminated and all MN buses pwrd after untie (tie bus short) >>

If short not eliminated, then:

If aff FC/MN BUS connected to PL PRI BUS:

4. PL PRI (three) – OFF (tb-OFF)

If short eliminated (pri PL short):

If a MN bus not pwrd:

5. Perform BUS TIE (Cue Card), then:

6. Go to PL PWRDN >>

If aff MN BUS connected to PTU:

7. PTU/MN BUS – OFF (tb-OFF) (pnl A15)
   OPCU CONV – OFF

If short eliminated (short on PTU/MN Bus connection):

If a MN bus not pwrd:

8. Perform BUS TIE (Cue Card) >>

Otherwise:

9. >>

10. (Aff) ESS BUS SOURCE FC – OFF
    FC/MN BUS – OFF (tb-OFF)

If aff FC VOLTS < 32 (FC short):

11. (Aff) FC REAC VLV – CL (tb-CL)
12. Go to FC SHUTDN (Cue Card) (do not stop FC until COOL P < 15 and STACK T < 243) >>

If FC VOLTS ≥ 32 (bus short):

CAUTION
Do not bus tie to shorted bus

13. Go to aff MN BUS LOSS ACTION >>

Cont next page

If MN VOLTS < 26.4 and FC VOLTS > 32 and FC AMPS < 20
(FC disconnect, check APUs):

14. MSTR MADS PWR – OFF

If PL PRI BUS pwr lost due to FC disconnect:

15. PL PRI (three) – OFF (tb-OFF)

16. (Aff) FC/MN BUS – ON (tb-ON)

If PL PRI disconnected in step 15:

17. Perform PL PWRDN, then:

If FC3 aff:

18. PL PRI FC3 – ON (tb-ON)
    MNC – ON (tb-ON)

If first FC prob:

19. Perform BUS TIE (Cue Card), then:

If aff FC VOLTS still > 32:

20. Go to FC SHUTDN (Cue Card) >>

21. (Aff) AC BUS SNSR – OFF,AUTO TRIP

22. GNC I/O RESET >>

If second FC failure and aff MN BUS not recovered:

23. PL PRI (three) – OFF (tb-OFF)

If aff MN BUS connected to PTU:

24. PTU/MN BUS – OFF (tb-OFF) (pnl A15)
    OPCU CONV – OFF

25. Go to 2nd FC SHUTDN >>

If neither:

26. Go to MAL, EPS, 7.3b, FUEL CELL VOLTS ↑↓, FUEL CELL AMPS ↑↓, MAIN BUS V A(B,C) ↑↓ [1]

3Φ AC MOTORS STOPPED
(No AC VOLTS Alarm: Φ Shift)

> WARNING
> If no FC Coolant Pump within 9 min, go to aff AC BUS (2 or 3 Φs) BUS LOSS ACTION

1. Determine aff AC BUS:
   FC1 and FREON PUMP 2B: AC1
   FC2 and FREON PUMP 1B: AC2
   FC3 and CAB FAN A: AC3
2. (Aff) FC – STOP

If AC3 aff:

3. AV BAY 3 FAN B – OFF
   A – ON
   CAB FAN A – OFF

Isolate aff ΦB(ΦC,ΦA):

4. (Aff) cb AC CONTR – cl
   INV/AC BUS – OFF (tb-OFF)

If AC1(2,3) aff and AV BAY FAN 3(2,3) $\Delta P \geq 0.5$:

5. Go to step 12 (bad Φ isolated)
6. (Aff) INV/AC BUS – ON (tb-ON)
   cb AC CONTR – op
7. Repeat from step 4 for ΦC(ΦA), then:

Drop aff AC bus (three Φs):

8. (Aff) cb AC CONTR (three) – cl
9. INV/AC BUS – OFF (tb-OFF)
10. INV PWR – OFF (tb-OFF)
11. Go to aff AC BUS (2 or 3 Φs) BUS LOSS ACTION >>

Bad Φ isolated:

12. (Aff) INV PWR – OFF (tb-OFF)
    cb AC CONTR – op
    FC – START (10 sec or ΔP tb-gray)
13. If AC3 aff: CAB FAN B – ON
14. Go to aff MAL, EPS SSR BUS LOSS ACTION

AC VOLTS

SM 67 ELECTRIC
SM SYS SUMM 1

1. If AC OVERLOAD F7 light or 'S67 AC OVLD' msg: Go to AC OVERLOAD >>

If single Φ AC VOLTS > 123 or between 10 and 110 (confirm with F9 meter):

2. (Aff) cb AC CONTR – cl
   INV/AC BUS – OFF (tb-OFF)
   INV PWR – OFF (tb-OFF)
   cb AC CONTR – op

If other Φ AC VOLTS < 110 or AC AMPS > 14:

3. Go to step 6

If other Φ AC AMPS > 10:

4. Isolate shorted Φ: Open all aff AC1(2,3) three-Φ ganged cbs and all aff AC1(2,3) ΦA(B,C) single-Φ cbs as follows:

total number of cbs to √ open

BUS	L4	MA73C
AC1 3Φ	1	5
ΦA	16	5
ΦB	16	4
ΦC	13	5
AC2 3Φ	0	9
ΦA	15	5
ΦB	16	4
ΦC	14	5
AC3 3Φ	1	7
ΦA	15	3
ΦB	16	3
ΦC	13	3

5. Go to aff MAL, EPS SSR BUS LOSS ACTION >>

If multi Φ AC VOLTS < 110:

If any AC AMPS > 14 (unannun OVLD):

6. (Aff) cb AC CONTR (three) – cl
   INV/AC BUS – OFF (tb-OFF)
   INV PWR – OFF (tb-OFF)
   cb AC CONTR (three) – op
7. Go to aff BUS LOSS ACTION >>

If all AC AMPS < 1 (FPC bus lost):

8. Go to aff BUS LOSS ACTION >>

If all AC VOLTS between 110 and 123:

9. Go to MAL, EPS, 7.5a, AC VOLTS 1(2,3) ↓↑ [6]

If any AC VOLTS < 110 or AC AMPS > 14 (OVLD):

If single Φ:

1. (Aff) cb AC CONTR – cl
   INV/AC BUS – OFF (tb-OFF)
   INV PWR – OFF (tb-OFF)
   cb AC CONTR – op

If other Φ AC VOLTS < 110 or AC AMPS > 14:

2. Go to step 5

3. Isolate shorted Φ: Open all aff AC1(2,3) three-Φ ganged cbs and all aff AC1(2,3) ΦA(B,C) single-Φ cbs as follows:

total number of cbs to √ open

BUS	L4	MA73C
AC1 3Φ	1	5
ΦA	16	5
ΦB	16	4
ΦC	13	5
AC2 3Φ	0	9
ΦA	15	5
ΦB	16	4
ΦC	14	5

Cont next page

AC3 3Φ	1	7
ΦA	15	3
ΦB	16	3
ΦC	13	3

4. Go to aff MAL, EPS SSR BUS LOSS ACTION >>

If multi Φ (bus short):

5. (Aff) cb AC CONTR (three) – cl
   INV/AC BUS – OFF (tb-OFF)
   INV PWR – OFF (tb-OFF)
   cb AC CONTR (three) – op
6. Go to aff BUS LOSS ACTION >>

If all AC VOLTS between 110 and 123 and AC AMPS < 14:

7. Go to MAL, EPS, 7.5b, AC OVLD 1(2,3) ↓ 6

ESS BUS VOLTS LOW

If verified by F9 voltmeter:

	1BC	2CA	3AB
If aff cb op	MNA CONTR (pnl O15:B)	MNB CONTR (pnl O16:B)	MNC CONTR (pnl O14:B)
1. (Aff) cb – op	MNA CONTR (pnl O13:A)	MNB CONTR (pnl O13:C)	MNC CONTR (pnl O13:E)
2. (Aff) cb – cl	MNA CONTR (pnl O15:B)	MNB CONTR (pnl O16:B)	MNC CONTR (pnl O14:B)

3. Perform FC SHUTDN (Cue Card) [FC/MN BUS A(B,C), and MN BUS TIE A(B,C) tbs lost], then:
4. Go to aff BUS LOSS ACTION (ESS)

CNTL BUS V LOW/CNTL BUS RPC

WARNING
If VISIBLE FIRE/SMOKE AT ANY TIME, cb CNTL BUS AB1/2/3(BC1/2/3,CA1/2/3) – op (pnl R14:B)

NOTE
CNTL BUS PWR sws must be held continuously in the RESET posn to unpwr bus(es)

1. Identify BUS (√BUS LOSS ID)
♦ 2. If one CNTL BUS RPC tripped (*****):

Aff CNTL BUS:

AB1(2,3)

	Tripped RPC (*****)	Action (for RESET, hold w/sw reten device)	
3.	**A**	R1	CNTL BUS PWR MNB – RESET
		R14:B	cb CNTL BUS AB1/2/3 – op
4.	**B**	R1	CNTL BUS PWR MNA – RESET
		R14:B	cb CNTL BUS AB1/2/3 – op

BC1(2,3)

	Tripped RPC (*****)	Action (for RESET, hold w/sw reten device)	
5.	**B**	R1	CNTL BUS PWR MNC – RESET
		R14:B	cb CNTL BUS BC1/2/3 – op
6.	**C**	R1	CNTL BUS PWR MNB – RESET
		R14:B	cb CNTL BUS BC1/2/3 – op

~

Cont next page

CA1(2,3)

	Tripped RPC (*****)	Action (for RESET, hold w/sw reten device)
7.	**C**	R1 CNTL BUS PWR MNA – RESET R14:B cb CNTL BUS CA1/2/3 – op
8.	**A**	R1 CNTL BUS PWR MNC – RESET R14:B cb CNTL BUS CA1/2/3 – op

♦ If no CNTL BUS RPC tripped (no *****):

	aff CNTL BUS	Panel R1 action (hold w/sw reten device)
9.	**AB1(2,3)**	CNTL BUS PWR MNA,MNB (two) – RESET
10.	**BC1(2,3)**	CNTL BUS PWR MNB,MNC (two) – RESET
11.	**CA1(2,3)**	CNTL BUS PWR MNA,MNC (two) – RESET

If CNTL BC2 unpwrd:

C3 12. S-BD PM CNTL – PNL,CMD

If CNTL BC1 and BC2 unpwrd, comm will be UHF only

For all CNTL V < 25.0:

13. Perform BUS LOSS ACTION (CNTL), then, on MCC call only, perform MAL, EPS SSR-100 thru SSR-108, then:

14. Perform CONTROL BUS PWRDN (IFM, PROCEDURES A THRU F) for shorted bus, then:

15. If reqd, back out of BUS LOSS ACTION for regained buses, then:

16. Perform MAL, EPS SSR-100 thru SSR-108 for shorted bus, then:

If pwr reqd (<3 sec) for crit function:

17. Hold crit function sw

For tripped RPC:

R1 18. CNTL BUS PWR MNA(MNB,MNC) – RESET (1 sec), then dn

FC COOLANT PUMP ΔP LOW

SM 69 FUEL CELLS
SM SYS SUMM 1

If other 3Φ AC motors aff and AC VOLTS OK:
1. Go to 3Φ AC MOTORS STOPPED >>

O14 2. √(Aff) FC CNTLR – ON
(O15,O16) FC – START (10 sec or ΔP tb-gray)

If FC EXIT T > 164 and not decr, or
H2 PUMP < 0.3 or > 0.8, or
RDY tb – bp (30 sec after START) or
L4:C (aff) FC PUMPS cb(s) – op:
3. Go to FC SHUTDN (Cue Card) >>

If FC H2 PUMP status norm, FC EXIT T norm, and RDY tb – gray:
N/A (snsr failed)

FC1(2,3) H2 PUMP ↑↓

SM 69 FUEL CELLS
SM SYS SUMM 1

If other 3Φ AC motors aff and AC VOLTS OK:
1. Go to 3Φ AC MOTORS STOPPED >>

If FC COOL PUMP ΔP tb – bp:
2. Go to FC COOLANT PUMP ΔP LOW >>

If FC H2 PUMP between 0.8 and 2.0 or between 3.0 and 4.6:
3. Perform BUS TIE (Cue Card), then:
4. Go to MAL, EPS, 7.1c, H2 PUMP ↑↓ [1] >>

If FC H2 PUMP < 0.2 or between 2.0 and 3.0 or > 4.6:
5. Note AC1(2,3) ΦA,B,C AMPS
6. Perform FC SHUTDN (Cue Card), then:
7. Go to MAL, EPS, 7.1c, H2 PUMP ↑↓ [7]

FC REACTANT VLV CLOSED

SM 69 FUEL CELLS
SM SYS SUMM 1

R1 1. FC REAC VLV (three) – OP (tb-OP or hold 1 sec max)
2. Perform BUS TIE (Cue Card), then:
If no joy on REAC open:
C3 3. √cb FC REAC VLV CL ENA (three) – op
R1 4. FC REAC VLV (three) – OP (tb-OP or hold 10 sec)
If aff FC COOL P decr or < 50 within 7 min:
5. Go to aff FC SHUTDN (Cue Card) >>
If aff COOL P > 50 and steady after 7 min:
6. Aff buses – untie if reqd

FC COOL P

SM 69 FUEL CELLS
SM 66 ENVIRONMENT

1. Perform BUS TIE (Cue Card), then:
If COOL P > 75, incr, and not 100 (H),
or FC COOL PUMP = ΔP (intermittent),
or STACK/EXIT T unstable,
or FC FLOW O2(H2) > 8.4(1.1):
2. Go to FC SAFING >>
If FC COOL P < 25 or > 75 and steady:
3. Go to MAL, EPS, 7.3e, FUEL CELL COOL P ↑↓ 8 >>
If FC COOL P between 25 and 50:
If FC COOL P < (SUPPLY H2O PRESS + 10):
4. Perform FC SHUTDN (Cue Card), then:
5. Go to MAL, EPS, 7.3e, FUEL CELL COOL P ↑↓ 45 >>
6. Go to MAL, EPS, 7.3e, FUEL CELL COOL P ↑↓ 30

If H2O RLF NOZ T A and B < 150:
- If more than one FC H2O LN T and H2O VLV T converging or within 5 degF of each other (mult FCs relieving):
  - If H2O SUPPLY PRESS ≥ 40:
    - 1. Go to H2O SPLY PRESS HIGH (ECLS), 4-15 >>
  - If H2O SUPPLY PRESS < 40:
    - 2. Initiate preparations for next PLS entry >>
- If one FC H2O LN T and H2O VLV T converging or within 5 degF of each other (single FC relieving):
  - 3. Go to BUS TIE (Cue Card) >>
- If no FC H2O LN T and H2O VLV T converging (HTR inop, NOZ frozen, or sw failure):
  - R11U 4. FC H2O RELIEF HTR – A AUTO(B AUTO) >>

If H2O RLF NOZ T A and B (both) > 425 (HTR fail on):
- 5. √MCC

FC DELTA V 1(2,3)

SM SYS SUMM 1
SM 69 FUEL CELLS

1. Perform BUS TIE (Cue Card), then:

If aff FC(H2O LINE) pH ↓ or FC ΔV incr:

2. Perform FC SAFING, then:
3. If pH ↓: Go to MAL, EPS, 7.3a, FC/H2O LINE pH HIGH 6 >>

If no aff FC(H2O LINE) pH ↓ and FC ΔV not incr:

4. Two min after bus tie, record FC ΔAMPS between aff and tied FC; monitor for 20 min

If change in FC ΔAMPS > 12 or FC ΔV incr:

5. Go to FC SAFING >>

If change in FC ΔAMPS ≤ 12, FC ΔV not incr, and no MCC:

6. SM 60 SM TABLE MAINT

Reset limits for (aff) FC ΔAMPS 1(2,3):

ITEM 1 +0 9 2 2 1 4 2(0922143,0922144) EXEC
2 ±(FC ΔAMPS – 40) EXEC
3 ±(FC ΔAMPS + 40) EXEC

FC pH HIGH or H2O LINE pH HIGH

SM SYS SUMM 1
SM 69 FUEL CELLS

If FC1(2,3) pH ↓:

1. Perform BUS TIE (Cue Card), then:

If aff FC ΔV SS 1(2,3) ≥ 150 and incr:

2. Perform FC SAFING, then:
3. Go to MAL, EPS, 7.3a, FC/H2O LINE pH HIGH 6 >>
4. SPLY H2O TKA INLET,OUTLET (two) – CL (tb-CL)
   √TKB INLET – CL [(tb-CL(bp)]
   TKC OUTLET – CL (tb-CL)
   TKD INLET – CL (tb-CL)
5. Go to MAL, EPS, 7.3a, FC/H2O LINE pH HIGH 1

FC SHUTDN (1st)

SM SYS SUMM 1

> WARNING
> If FC Coolant Pump lost,
> Emergency FC use OK for 9 min

1. MSTR MADS PWR – OFF
2. If not tied: Perform BUS TIE (Cue Card), then:
   If ORB (not deorb prep), kW > 18:
   MN BUS TIE (three) – ON
3. ESS BUS SOURCE FC – OFF
   FC/MN BUS – OFF (tb-OFF)
   FC – STOP (COOL PUMP ΔP tb-bp or 1 sec) (expect FDA msgs)
4. FC REAC VLV – CL (tb-CL)
   Go to LOSS OF 1 FC (PWRDN), 10-39

2nd FC SHUTDN

SM SYS SUMM 1

> WARNING
> If FC Coolant Pump lost,
> Emergency FC use OK for 6 min

1. MSTR MADS PWR – OFF
2. If aff FC pwrs one MN bus: Go to step 5
3. MN BUS TIE (three) – OFF (tb-OFF)
4. Perform BUS TIE (Cue Card) to good FC/BUS, then:
5. ESS BUS SOURCE FC – OFF
6. FC/MN BUS – OFF (tb-OFF)
7. FC – STOP (COOL PUMP ΔP tb-bp or 1 sec)
8. FC REAC VLV – CL (tb-CL)
9. Go to LOSS OF 2nd FC (PWRDN), 10-41

BUS TIE (do not tie bus short, check APUs)
If MN Volts > 20: Bus Tie >>
If MN Volts < 20 (do not BUS TIE Pre MECO for 1st FC):

1. (Aff) AC BUS SNSR – OFF
2. cb AC CONTR (three) – cl
3. (Aff) INV/AC BUS – OFF (tb-OFF)
4. (Aff) INV PWR – OFF (tb-OFF)
5. If MNC(B) dn: CAB FAN A(B) – OFF
6. Bus Tie
7. (Aff) INV PWR – ON (tb-ON)
♦ 8. (Aff) INV/AC BUS – ON (tb-ON)
9. cb AC CONTR (three) – op
10. GNC I/O RESET

Post MECO:

11. (Aff) AC BUS SNSR – AUTO TRIP
12. If pwrdn not reqd: √CAB FAN A(B) – ON

FC SAFING SM SYS SUMM 1

If FC already SHUTDN:
1. √FC1(2,3) REAC – CL (O2,H2 tb-CL)
2. FC1(2,3) – START (10 sec or ΔP tb-gray)
3. FC/MN BUS A(B,C) – ON (tb-ON)

When FC1(2,3) COOL P decr to < 15 or FC1(2,3) AMPS ≤ 0:
4. FC/MN BUS A(B,C) – OFF (tb-OFF)

When FC1(2,3) COOL P < 15, then:
5. FC1(2,3) – STOP (ΔP tb-bp or 1 sec) >>

If FC not SHUTDN:
6. MSTR MADS PWR – OFF

If not already tied:
7. Perform <u>BUS TIE</u> (Cue Card), then:

If ORB (not deorb prep) kW > 18:
8. MN BUS TIE (three) – ON (tb-ON)

9. FC1(2,3) REAC – CL (O2,H2 tb-CL)

If either FC REAC tb still OP:
C3 10. cb FC1(2,3) REAC VLV CL ENA – cl
11. FC REAC VLV 1(2,3) – CL

If no joy:
R1 12. Install sw reten device FC REAC sw

When FC1(2,3) COOL P decr to < 15 or FC1(2,3) AMPS ≤ 0:
13. ESS BUS SOURCE FC1(2,3) – OFF
14. FC/MN BUS A(B,C) – OFF (tb-OFF)

When FC1(2,3) COOL P < 15, then:
15. FC1(2,3) – STOP (ΔP tb-bp or 1 sec)

Go to LOSS OF 1 FC(2nd FC)(<u>PWRDN</u>), 10-39/10-41/10-45

CRYO O2(H2) PRESS/TEMP HIGH

SM 68 CRYO SYSTEM
SM SYS SUMM 2

1. (Aff) O2(H2) TK HTRS (two) – OFF
2. O2(H2) MANF VLV TK1,TK2 (two) – OP (tb-OP)
3. If PRESS ↑, go to MAL, EPS, 7.6b, CRYO O2(H2) PRES, TK P ↓↑ [1] >>
4. If O2 T ↑, go to MAL, EPS, 7.6l, O2 HTR T [1] >>
5. If H2 T ↑, go to MAL, EPS, 7.6f, H2 HTR T [1]

CRYO O2(H2) LEAK

SM 68 CRYO SYSTEM
SM SYS SUMM 2

If only one TK aff and P/TK P disagree:

1. Go to MAL, EPS, 7.6b, CRYO O2(H2) PRES, TK P ↓↑ [7] >>

2. Reconfig TK HTRS A,B – ON (not AUTO) in TK(s) with P < 740(190)

If all TK Ps in a common manf or the only TK P in an isolated manf < 740(190) and still decr:

3. O2(H2) MANF VLV TK1,TK2 (two) – CL
   If either MANF VLV fails to close:
   4. Hold sw in CLOSE posn (install sw reten device if reqd), then:
5. Reconfig TK HTRS A,B – AUTO in TK(s) with incr P
6. Perform aff MN BUS TIE (Cue Card), then:

If O2(H2) TK 1(2) aff (open unaff manf):

7. O2(H2) MANF VLV TK2(1) – OP

If O2 TK 1(2) aff:

8. O2 SYS 1(2) SPLY – CL
   If O2 TK 1(2) P now incr (PCS leak):
   9. O2 TK1(2) HTRS A,B (two) – AUTO
      MANF VLV TK1,TK2 (two) – OP >>
10. Perform aff FC SHUTDN (Cue Card), then:

If aff TK P incr (FC leak):

11. O2(H2) MANF VLV TK1,TK2 (two) – OP (ASAP if FC3)
12. (Aff) TK HTRS A,B (two) – AUTO >>

Cont next page

If aff TK P not incr within 2 min (MANF or TK leak):

13. (Aff) TK HTRS A,B (two) – OFF

If TK 1(2) aff and TK P/MANF P diverging (TK leak):

14. O2(H2) MANF VLV TK1,TK2 (two) – OP
15. Go to MAL, EPS SSR-6, FC RESTART >>

If TK 3(4,5) aff or if TK P/MANF P tracking (MANF leak) >>

If any TK P and connected MANF P diverging or $\Delta > 50$:

16. O2(H2) MANF VLV TK1,TK2 (two) – OP
17. (Aff) TK HTRS A,B (two) – OFF (TK leak or blockage)
18. (Other) TK HTRS – AUTO >>

If neither of the above and all TK Ps now steady or incr (small leak or HTR fail):

CAUTION
Do not allow P to exceed 920(260)

19. √MCC

CRYO

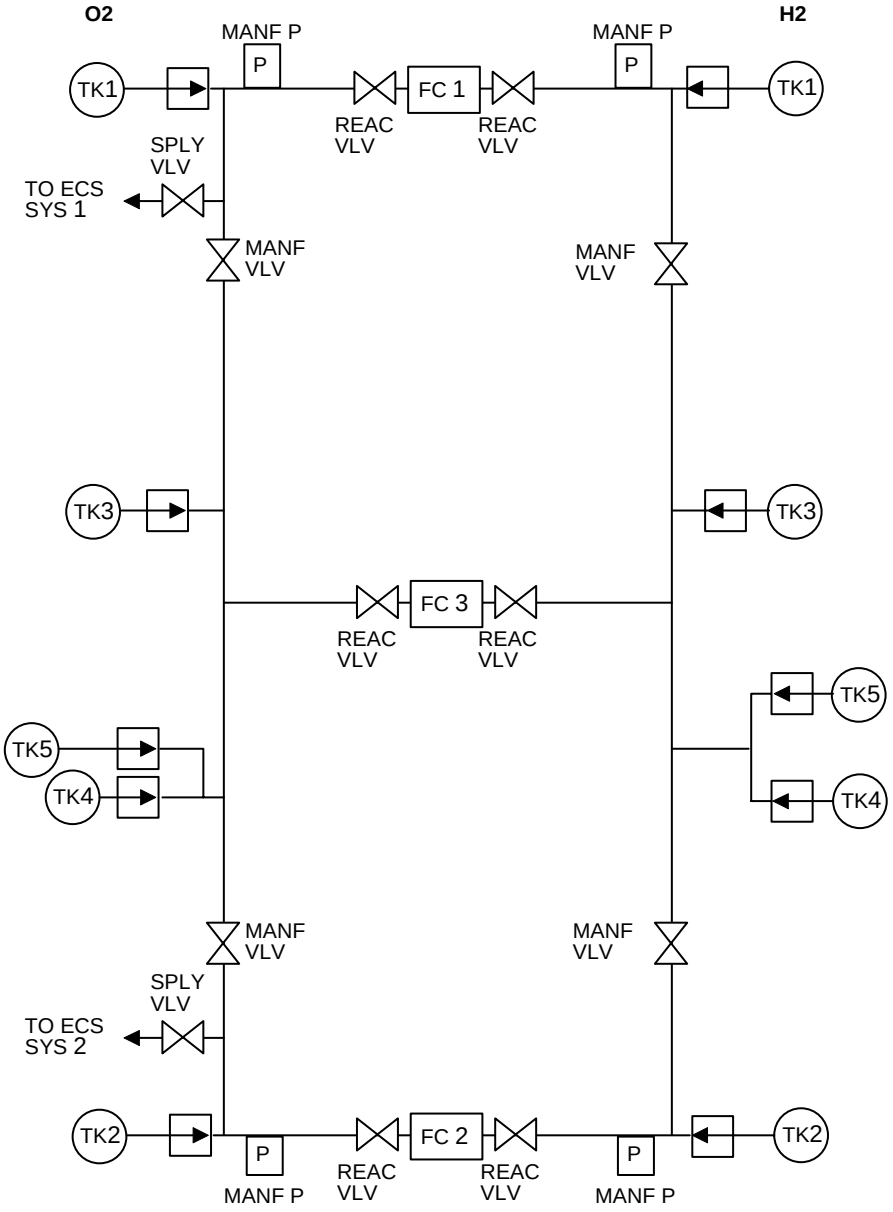
O2
H2
MANF P
P
MANF P
P
TK1
FC 1
TK1
REAC VLV
REAC VLV
SPLY VLV
TO ECS SYS 1
MANF VLV
MANF VLV
TK3
TK3
FC 3
REAC VLV
REAC VLV
TK5
TK5
TK4
TK4
MANF VLV
MANF VLV
SPLY VLV
TO ECS SYS 2
TK2
TK2
FC 2
P
P
REAC VLV
REAC VLV
MANF P
MANF P

O2/H2 HTR LOSS										
BUS LOSS	PAIRED				PAIRED					
	TK1		TK2		TK3		TK4		TK5	
	A	B	A	B	A	B	A	B	A	B
MNA DA1	A/M				A/M				A/M	
MNB DA2			AUTO	A/M	AUTO	A/M	AUTO	A/M		
MNC DA3	AUTO	A/M	A/M				A/M		AUTO	A/M
CNTL AB1		MAN			MAN					
AB2		A/M			A/M					
CNTL BC1			MAN				MAN			MAN
BC2			A/M				A/M			
BC3				MAN				MAN		A/M
CNTL CA1	MAN					MAN			MAN	
CA2	A/M					A/M			A/M	
CA3				A/M				A/M		
ESS 1BC	*	*	AUTO	AUTO	*	*	AUTO	AUTO		
2CA	AUTO	AUTO	*	*					AUTO	AUTO
3AB					AUTO	AUTO	*	*		

*IF TK IS PAIRED WITH A FAILED TK(S), AUTO CAPABILITY IN THIS TK IS LOST. AUTO CAPABILITY IN THIS TK CAN BE REGAINED BY TAKING FAILED TK(S) HTR SWITCHES OUT OF AUTO.
TK1 PAIRED WITH TK2, AND TK3 PAIRED WITH TK4.

A/M = AUTO AND MANUAL CAPABILITY LOST

03/27/03

MAIN DC BUS LOSS ID TABLE

INDICATION	BUS	MAIN A										MAIN B								MAIN C								
		* FPC1			MPC1			APC4				* FPC2			MPC2		APC5			* FPC3			MPC3			APC6		
			FLC1	FMC1		MMC1	MMC3		APC1	ALC1	AMC1		FLC2	FMC2		MMC2		APC2	ALC2		FLC3	FMC3		MMC2	MMC4		APC3	ALC3
C/W	AC VOLTAGE (AC X Lost)	1										2								3								
	APU TEMP (~2 min if APU X ON & BLR/CNTLR A sel)							3		3							1		1							2		2
	(~2 min if APU X ON & BLR/CNTLR B sel)							1		1							2		2							3		3
	FREON LOOP (If cooling by FES X only)							B		B																A		A
	H2O LOOP (If Pump X Active)			1A										1B														
	OMS TVC (During OMS PRI GMBL)							L	L																	R	R	
	OMS TVC (During OMS SEC GMBL)							R	R								L	L										
	RCS JET (When Jet Commanded)		•										•								•							
DISP 67	DC AMPS XY = 0 (X: Fwd,Mid,Aft) (Y: A,B,C)	FA			MA			AA				FB			MB		AB			FC			MC			AC		
	DC V PCA XY = 0 (X: Fwd,Aft) (Y: A,B,C)	FA	FA					AA		AA		FB	FB				AB		AB	FC	FC					AC		AC
	CNTL BUS RPC X = '*' (X: A,B,C)	A										B								C								
PLB LTS	PLB,FLOODS (Fwd,Mid,Aft Port,Stbd,Bkhd,Docking)				FP										FB								MS					
					AS										FS								AP					
					D										MP													
S-BAND	SYS X ORB voice & PL PSP msg (X: 1,2)												1								2							
PANELS L2	ATM O2 SYS X SPLY tb – CL				1										2													
F6/F8	LANDING GEAR X tb – bp (X: L,R,NOSE)												LN								RN							
F7	CRT X Blanks	1										2								3,4								
O1	H2O PUMP OUT P X = 20 (Pump Loss)			1A										1B														
O7	AFT X RCS He P Y tb - bp (X: Both,L,R) (Y: A,B)							BA		BA							RB		RB							LB		LB
	AFT L,R RCS MANF ISOL 5 tb – bp																									•		•
O8	FWD RCS He P X tb – bp		A										B															
	FWD RCS TK ISOL X tb – bp (X: 1/2,3/4/5)			3																		1						
	FWD RCS MANF ISOL X tb – bp			1										2							5	4						
R4	HYD BK ISOL VLV X tb – OP							1		1							2		2							3		3
	LG EXTD ISO VLV tb – OP							•			•																	
R13L	RAD CNTL X tb – bp (X: PORT,STBD)				PS	S	P																PS	P	S			
A8U	RMS EE (except DERIGID) tbs – bp, MA LT – ON				•																							
A8L	X RMS DPY/STO tb – bp (X: PORT,STBD)				P										P								P					
	X RMS RETEN LAT tb – bp (X: PORT,STBD)				P	P									P	P							P	P				
	PORT RMS R-F-L X tb – bp (X: FWD,MID,AFT)				M	M									F	F							A	A				

*For MNA(B,C) FPC 1(2,3) many other indications are present, most of which are associated with the resultant AC1(2,3) loads.
Only the additional indications that positively identify the FPC bus loss are listed.

DATE 07/29/05

MAIN DC BUS LOSS ID TABLE

INDICATION		BUS	MAIN A				MAIN B			MAIN C		
			O 1 4	O 1 4 A 8	R 1 4	M L 8 6 B	O 1 5	R 1 4	M L 8 6 B	O 1 6	R 1 4	M L 8 6 B
C/W		CABIN ATM	•				•					
LIGHTS		FLOODS (L Seat,R Seat, CTR Cnsl, MS,OS,PS)			PS		LC	OS		RC	MS	
		Floods (L,R Ovhd Cnsl)	L				R					
		MIDDECK FLOODS X (X: 1,2,3,4,5,6,7,8)				18			26			34 57
		WMC FLOOD				•						
COMM		All Voice via AUDIO CTR 2									•	
		ATU PS,MS,MD,AL			MS			MD			PS AL	
		UHF SPLX PWR AMP			•							
TIMERS		X MISSION TIMER (X: Fwd,Aft)	F				A					
		X EVENT TIMER (X: Fwd,Aft)	A				F					
PANELS	FWD	MDUs			MFD2 PLT1			CDR2 MFD1			CDR1 PLT2	
	AFT	MDU									AFD1	
	L2	CAB RELIEF X tb – bp					A			B		
		ATM N2 SYS X SPLY, REG INLET tb – bp	1				2					
	O1	CAB dP/dT = 0.45					•					
		CAB PRESS = 0 psia	•									
		PPO2 SNSR X = 0 psia	A				BC					
	O3	RCS/OMS PRPLT QTY Disp Blanks								•		
	R11L	SPLY H2O TK X INLET tb – bp				A			B			C
		SPLY H2O TK X OUTLET tb – bp				B			C			A
		SPLY H2O DUMP ISOL, B SPLY ISOL VLV tb – bp							•			
		SPLY H2O DUMP, XOVR, GALLEY SPLY VLV tb – bp										•
	A8U	RMS EE (6), SAFING, S/W STOP tb – bp, BRAKES tb – OFF		•								
	ML31C	WASTE H2O TK X VLV tb – bp				1						
		WASTE H2O DUMP ISOL VLV tb – bp				•						
		SPLY H2O TK D X tb – bp (X: INLET,OUTLET)				O			I			

DATE 12/09/03

ESS DC BUS LOSS ID TABLE

INDICATION		BUS	ESS1BC						ESS2CA					ESS3AB					
			DA 1	FP & LC 1	MPC 1	FD	O13 R14	ML 86B	DA 2	FP & LC 2	MPC 2	FD	O13 R14	DA 3	FP & LC 3	MPC 3	FD	O13	ML 86B
C/W		MA, but no F7 C/W Lts	•				•												
		O2 PRESS						•	•				•	•					•
		H2 PRESS						•	•				•	•					•
		FC REAC			•				•		•			•		•			
		FC PUMP			•	•			•		•	•		•		•	•		
		PRIMARY C/W (Cannot be Reset)							•				•						
		BACKUP C/W (Cannot be Reset)							•				•						
F9 METER		Aff ESS VOLTS OFF Scale Lo	•			•			•			•		•			•		
SM1		Aff DC VOLTS ESS = 0	•						•					•					
COMM		All Voice via AUDIO CTR 1							•				•						
		X ATU,CCU,MIC (X: Cdr,Plt)	C				C		P				P						
LIGHTS LOST		F7 C/W MATRIX	•				•												
		MA BULBS 2 of 4 per MA (except Lamp Test)	•				•		•				•						
		GPC STATUS LTS												•				•	
		X GLARESHIELD FLOOD (X: L,R)	L				L		R				R						
PANELS	O2	O2,H2 TK X QTY = 0% (X: 1,2,3,4)	24				2	4	1				1	3					3
	R1	FC/MN BUS X tb – OFF	A						B					C					
		PL PRI MNC tb – OFF												•					
		INV PWR X tb – OFF (Inv OK)		1						2					3				
		INV/AC BUS X tb – OFF (Bus OK)	1				1		2				2	3				3	
		O2,H2 MANF VLV TK X tb – CL	1		1				2		2								
		FC X REAC tb – CL	1		1				2		2			3		3			
		FC X RDY tb – bp	1		1	1			2		2	2		3		3	3		
		FC X COOL PUMP ΔP tb – bp	1		1	1			2		2	2		3		3	3		
	A12	FC3 STRUCT RTN tb – OFF												•					

DATE 05/23/00

CNTL AB1
MDU CRT 1 Blanks
C/W – FREON LOOP if FES active (Pri B GPC)

CNTL AB2
L HUD lost
C/W – FREON LOOP if FES active (Pri B ON)

CNTL AB3
(O8) – FWD RCS TK ISOL 3/4/5 (tb-bp)
MANF ISOL 1 (tb-bp)
(L1) – FLOW PROP VLV LOOP 1 (tb-bp)

CNTL BC1
(L1) – RAD BYP VLV MAN SEL 2 (tb-bp)
S-BD SYS 1 Comm
PL SYS 1
R HUD lost

CNTL BC2
MDU CRT 2 Blanks
C/W – H2O LOOP (if Pump 1B ON)
S-BD SYS 2 Comm
PL SYS 2

CNTL BC3
(O8) – FWD RCS MANF ISOL 2 (tb-bp)
C/W – H2O LOOP (if Pump 1B ON)

CNTL CA1
MDU CRT 3 Blanks
C/W – FREON LOOP if FES active (Pri A GPC)
C/W – H2O LOOP (if LOOP 2 GPC)

CNTL CA2
MDU CRT 4 Blanks
C/W – FREON LOOP if FES active (Pri A ON)

CNTL CA3
(O8) – FWD RCS TK ISOL 1/2 (tb-bp)
MANF ISOL 3 (tb-bp)
4 (tb-bp)
(L1) – RAD BYP VLV MAN SEL 1 (tb-bp)
FLOW PROP VLV LOOP 2 (tb-bp)

NOTE

If CNTL Bus Loss suspected, check SM1 DC V CNTL for confirming cue

BUS LOSS ACTION

AC1/ MNA

	PAGE
AC1	5-26
MNA DA1	5-27
FPC1	5-28
FLC1	5-28
FMC1	5-28
MPC1	5-28
APC4	5-28
ALC1	5-29
O14	5-29
R14	5-29
AC2	5-30
MNB DA2	5-31
FPC2	5-32
FLC2	5-32
FMC2	5-32
MPC2	5-32
APC5	5-33
ALC2	5-33
O15	5-33
AC3	5-34
MNC DA3	5-35
FPC3	5-36
FLC3	5-36
APC6	5-36
ALC3	5-37
O16	5-37
R14	5-37

	PAGE
CNTL AB1	5-38
AB2	5-38
AB3	5-38
BC1	5-39
BC2	5-40
BC3	5-40
CA1	5-41
CA2	5-41
CA3	5-41
ESS 1BC:	
DA1 (CIL)	5-42
MPC1 (CIL)	5-42
FD (CIL)	5-42
O13&R14	5-42
ESS 2CA:	
DA2 (CIL)	5-43
MPC2 (CIL)	5-43
FD (CIL)	5-43
O13&R14	5-43
ESS 3AB:	
DA3 (CIL)	5-44
MPC3 (CIL)	5-44
FD (CIL)	5-44

PROBLEM	PWRUP	
	LOW LEVEL (Group B)	MSN EXT (Group C)
EPS BUS LOSS	N/A	ALL FF&FA MDMs

OPCL/ALL/GEN M

AC1 (2 or 3Φs)

1. Perform FC1 SHUTDN (Cue Card), then:

L1 2. IMU FAN A – OFF
B(C) – ON
AV BAY 1 FAN A – OFF
B – ON
3 FAN A – ON
B – OFF
FREON PUMP LOOP 1 – B
2 – A

If MNA FPC1 bus lost, return to MNA FPC1 BUS LOSS ACTION >>

3. Go to MAL, EPS SSR-110, BUS LOSS: AC1

MNA DA1 (Entire Bus) (Includes AC1)

NOTE
Loss of UHF SPLX Hi Pwr Xmit

1. Perform FC1 SHUTDN (Cue Card), then:

R1 2. PL CAB – MNB

L1 3. IMU FAN B(C) – ON
AV BAY 1 FAN B – ON
3 FAN A – ON
FREON PUMP LOOP 1 – B
2 – A
TOP EVAP HTR DUCT sel – B

If HI LOAD EVAP ENA:

4. HI LOAD DUCT HTR sel – B

O6 5. ANNUN BUS SEL ACA 1 – MNB

A12 6. APU HTR
GAS GEN/FU PUMP 1 – B AUTO
3 – A AUTO
TK/FU LN/H2O SYS 1B – AUTO
3A – AUTO

7. Perform LOSS OF VERNIERS (ORB OPS, RCS), then:

8. Go to MAL, EPS SSR-10, BUS LOSS: MNA DA1

MNA FPC1

1. Perform AC1 (2 or 3Φs) (omit MAL, EPS SSR-110, BUS LOSS: AC1), then:
2. Go to MAL, EPS SSR-11, BUS LOSS: MNA FPC1

MNA FLC1

1. GNC 23 RCS
   Ovrd F1 MANF STAT – CL
2. Go to MAL, EPS SSR-15, BUS LOSS: MNA FLC1

MNA FMC1

If reqd for att control:
   1. GNC 23 RCS
      Ovrd F1 MANF STAT – OP
2. Go to MAL, EPS SSR-17, BUS LOSS: MNA FMC1

MNA MPC1

L1 1. TOP EVAP HTR DUCT sel – B
If HI LOAD EVAP ENA:
   2. HI LOAD DUCT HTR sel – B
R1 3. PL CAB – MNB
4. Go to MAL, EPS SSR-12, BUS LOSS: MNA MPC1

MNA APC4

L1 1. TOP EVAP HTR DUCT sel – B
If HI LOAD EVAP ENA:
   2. HI LOAD DUCT HTR sel – B
A12 3. APU HTR
   GAS GEN/FU PUMP 1 – B AUTO
   3 – A AUTO
   TK/FU LN/H2O SYS 1B – AUTO
   3A – AUTO
4. Perform LOSS OF VERNIERS (ORB OPS, RCS), then:
5. Go to MAL, EPS SSR-14, BUS LOSS: MNA APC4

MNA ALC1

L1 1. TOP EVAP HTR DUCT sel – B
If HI LOAD EVAP ENA:
2. HI LOAD DUCT HTR sel – B
A12 3. APU HTR
GAS GEN/FU PUMP 1 – B AUTO
3 – A AUTO
TK/FU LN/H2O SYS 1B – AUTO
3A – AUTO
4. Perform LOSS OF VERNIERS (ORB OPS, RCS), then:
5. Go to MAL, EPS SSR-16, BUS LOSS: MNA ALC1

AC2/ MNB

MNA O14

O6 1. ANNUN BUS SEL ACA 1 – MNB
2. Go to MAL, EPS SSR-23, BUS LOSS: MNA O14

MNA R14

NOTE
Loss of UHF SPLX Hi Pwr Xmit

Go to MAL, EPS SSR-21, BUS LOSS: MNA R14

AC2 (2 or 3Φs)

AC2/ MNB

1. Perform FC2 SHUTDN (Cue Card), then:

L1 2. CAB FAN A – ON
B – OFF
IMU FAN A(C) – ON
B – OFF
AV BAY 1 FAN A – ON
B – OFF
2 FAN A – OFF
B – ON
FREON PUMP LOOP 1 – A

O17:C 3. SIG CONDR FREON A – AC3

If MNB FPC2 bus lost, return to MNB FPC2 BUS LOSS ACTION >>

4. Go to MAL, EPS SSR-120, BUS LOSS: AC2

MNB DA2 (Entire Bus) (Includes AC2)

CAUTION
Do not sw S-BD PM CNTL to PNL if subs Fault Msg – 'BCE STRG 3 NSP' or loss of comm

1. Perform FC2 SHUTDN (Cue Card), then:

L1 2. CAB FAN A – ON
IMU FAN A(C) – ON
AV BAY 1 FAN A – ON
2 FAN B – ON
FREON PUMP LOOP 1 – A
TOP EVAP HTR DUCT sel – A

If HI LOAD EVAP ENA:

3. HI LOAD DUCT HTR sel – A

O6 4. ANNUN BUS SEL ACA 1 – MNA
2/3 – MNC

O17:C 5. SIG CONDR FREON A – AC3

A12 6. APU HTR
GAS GEN/FU PUMP 1 – A AUTO
2 – B AUTO
TK/FU LN/H2O SYS 1A – AUTO
2B – AUTO

If PL comm reqd:

A1L 7. S-BD PL PWR SYS – 2
CNTL – PNL,CMD

8. To reconfig PSP, √MCC
9. Perform LOSS OF VERNIERS (ORB OPS, RCS), then:
10. Go to MAL, EPS SSR-30, BUS LOSS: MNB DA2

MNB FPC2

CAUTION
Do not sw S-BD PM CNTL to PNL if subs Fault Msg – 'BCE STRG 3 NSP' or loss of comm

If PL comm reqd:

A1L 1. S-BD PL PWR SYS – 2
CNTL – PNL,CMD

If OIU reqd (√MCC):

SSP 2. OIU PWR – OIU 2 ON (tb-DN)

3. To reconfig PSP/OIU, √MCC

4. Perform AC2 (2 or 3 Φs) (omit MAL, EPS SSR-120, BUS LOSS: AC2), then:

5. Go to MAL, EPS SSR-31, BUS LOSS: MNB FPC2

MNB FLC2

CAUTION
Do not sw S-BD PM CNTL to PNL if subs Fault Msg – 'BCE STRG 3 NSP' or loss of comm

1. GNC 23 RCS
Ovrd F2 MANF STAT – CL

If PL comm reqd:

A1L 2. S-BD PL PWR SYS – 2
CNTL – PNL,CMD

If OIU reqd (√MCC):

SSP 3. OIU PWR – OIU 2 ON (tb-DN)

4. To reconfig PSP/OIU, √MCC

5. Go to MAL, EPS SSR-35, BUS LOSS: MNB FLC2

MNB FMC2

If reqd for att control:

1. GNC 23 RCS
Ovrd F2 MANF STAT – OP

2. Go to MAL, EPS SSR-37, BUS LOSS: MNB FMC2

MNB MPC2

L1 1. TOP EVAP HTR DUCT sel – A

If HI LOAD EVAP ENA:

2. HI LOAD DUCT HTR sel – A

A1U 3. KU BD PWR – OFF
CNTL – PNL

4. Go to MAL, EPS SSR-32, BUS LOSS: MNB MPC2

MNB APC5

L1 1. TOP EVAP HTR DUCT sel – A
If HI LOAD EVAP ENA:
2. HI LOAD DUCT HTR sel – A
A12 3. APU HTR
GAS GEN/FU PUMP 1 – A AUTO
2 – B AUTO
TK/FU LN/H2O SYS 1A – AUTO
2B – AUTO
4. Perform LOSS OF VERNIERS (ORB OPS, RCS), then:
5. Go to MAL, EPS SSR-34, BUS LOSS: MNB APC5

MNB ALC2

AC3/ MNC

L1 1. TOP EVAP HTR DUCT sel – A
If HI LOAD EVAP ENA:
2. HI LOAD DUCT HTR sel – A
A12 3. APU HTR
GAS GEN/FU PUMP 1 – A AUTO
2 – B AUTO
TK/FU LN/H2O SYS 1A – AUTO
2B – AUTO
4. Perform LOSS OF VERNIERS (ORB OPS, RCS), then:
5. Go to MAL, EPS SSR-36, BUS LOSS: MNB ALC2

MNB O15

O6 1. ANNUN BUS SEL ACA 1 – MNA
2/3 – MNC
2. Go to MAL, EPS SSR-45, BUS LOSS: MNB O15

AC3 (2 or 3Φs)

1. Perform FC3 SHUTDN (Cue Card), then:

L1 2. CAB FAN A – OFF
B – ON
IMU FAN B(A) – ON
C – OFF

L4:F cb AC1 H2O LOOP PUMP 1A/2 (three) – cl
H2O PUMP LOOP 1 – ON
2 – GPC
AV BAY 2 FAN A – ON
B – OFF
3 FAN A – OFF
B – ON
FREON PUMP LOOP 2 – B

AC3/ MNC

O17:C 3. SIG CONDR FREON B – AC2
If MNC FPC3 bus lost, return to MNC FPC3 BUS LOSS ACTION >>

4. Go to MAL, EPS SSR-130, BUS LOSS: AC3

MNC DA3 (Entire Bus) (Includes AC3)

	1.	Perform FC3 SHUTDN (Cue Card), then:
L1	2.	CAB FAN B – ON IMU FAN B(A) – ON H2O PUMP LOOP 1 – ON AV BAY 2 FAN A – ON 3 FAN B – ON FREON PUMP LOOP 2 – B FLASH EVAP CNTLR PRI A – OFF B – ON
C3	3.	S-BD PM CNTL – PNL,CMD

NOTE

If S-BD mode TDRS or STDN HI, xmit may be delayed 140 sec for PA warmup. Receive not affected

	4.	AUD CTR – 1
O6	5.	ANNUN BUS SEL ACA 2/3 – MNB
O17:C	6.	SIG CONDR FREON B – AC2
A12	7.	APU HTR GAS GEN/FU PUMP 2 – A AUTO 3 – B AUTO TK/FU LN/H2O SYS 2A – AUTO 3B – AUTO
	8.	Perform LOSS OF VERNIERS (ORB OPS, RCS), then:
	9.	Go to MAL, EPS SSR-50, BUS LOSS: MNC DA3

MNC FPC3

C3 1. S-BD PM CNTL – PNL,CMD

NOTE
If S-BD mode TDRS or STDN HI, xmit may be delayed 140 sec for PA warmup. Receive not affected

2. Perform AC3 (2 or 3 Φs) (omit MAL, EPS SSR-130, BUS LOSS: AC3), then:
3. Perform LOSS OF VERNIERS (ORB OPS, RCS), then:
4. Go to MAL, EPS SSR-51, BUS LOSS: MNC FPC3

MNC FLC3

C3 1. S-BD PM CNTL – PNL,CMD

NOTE
If S-BD mode TDRS or STDN HI, xmit may be delayed 140 sec for PA warmup. Receive not affected

2. GNC 23 RCS
   Ovrd F4 MANF STAT – CL
3. Perform LOSS OF VERNIERS (ORB OPS, RCS), then:
4. Go to MAL, EPS SSR-55, BUS LOSS: MNC FLC3

MNC APC6

L1 1. FLASH EVAP CNTLR PRI A – OFF
B – ON

A12 2. APU HTR
GAS GEN/FU PUMP 2 – A AUTO
3 – B AUTO
TK/FU LN/H2O SYS 2A – AUTO
3B – AUTO

3. Go to MAL, EPS SSR-54, BUS LOSS: MNC APC6

MNC ALC3

L1	1.	FLASH EVAP CNTLR PRI A – OFF B – ON
A12	2.	APU HTR GAS GEN/FU PUMP 2 – A AUTO 3 – B AUTO TK/FU LN/H2O SYS 2A – AUTO 3B – AUTO
	3.	Go to MAL, EPS SSR-56, BUS LOSS: MNC ALC3

MNC O16

O6	1.	ANNUN BUS SEL ACA 2/3 – MNB
	2.	Go to MAL, EPS SSR-63, BUS LOSS: MNC O16

MNC R14

C3	1.	AUD CTR – 1
	2.	Go to MAL, EPS SSR-61, BUS LOSS: MNC R14

CNTL AB1

L1 1. TOP EVAP HTR DUCT sel – B

If HI LOAD EVAP ENA:

2. HI LOAD DUCT HTR sel – B

A12 3. APU HTR

GAS GEN/FU PUMP 1 – B AUTO
3 – A AUTO
TK/FU LN/H2O SYS 1B – AUTO
3A – AUTO

If AB1,2,3 unpwrd:

4. GNC 23 RCS
Ovrd F1 MANF STAT – CL

5. Go to MAL, EPS SSR-100, BUS LOSS: CNTLAB1

CNTL AB2

L1 1. TOP EVAP HTR DUCT sel – B

If HI LOAD EVAP ENA:

2. HI LOAD DUCT HTR sel – B

3. GNC 23 RCS
Ovrd F1 MANF STAT – CL

A12 4. APU HTR

GAS GEN/FU PUMP 1 – B AUTO
TK/FU LN/H2O SYS 1B – AUTO
3A – AUTO

5. Go to MAL, EPS SSR-101, BUS LOSS: CNTLAB2

CNTL AB3

NOTE

CDR's BFS engage capability lost

L1 1. TOP EVAP HTR DUCT sel – B

If HI LOAD EVAP ENA:

2. HI LOAD DUCT HTR sel – B

Do not perform next step if AB1,2,3 unpwrd:

If reqd for att control:

3. GNC 23 RCS
Ovrd F1 MANF STAT – OP

A12 4. APU HTR

GAS GEN/FU PUMP 1 – A AUTO
TK/FU LN/H2O SYS 1B – AUTO
3A – AUTO

Cont next page

A6U If DAP MAN MODE reqd:

5. Use aft station

If BFS engage reqd:

6. Use PLT's RHC

O6 GPC MODE 1,2,4 (three) – STBY,HALT

BFS I/O RESET

7. Go to MAL, EPS SSR-102, BUS LOSS: CNTLAB3

CNTL BC1

CAUTION
Do not sw S-BD PM CNTL to PNL if subs Fault Msg – 'BCE STRG 3 NSP' or loss of comm

L1 1. TOP EVAP HTR NOZ L – B AUTO

DUCT sel – A

If HI LOAD EVAP ENA:

2. HI LOAD DUCT HTR sel – A

A12 3. APU HTR

GAS GEN/FU PUMP 1 – A AUTO

2 – B AUTO

TK/FU LN/H2O SYS 1A – AUTO

2B – AUTO

If PL comm reqd:

A1L 4. S-BD PL PWR SYS – 2

CNTL – PNL,CMD

If OIU reqd (√MCC):

SSP 5. OIU PWR – OIU 2 ON (tb-DN)

6. To reconfig PSP/OIU, √MCC

If BC1,2,3 unpwrd:

7. GNC 23 RCS

Ovrd F2 MANF STAT – CL

8. Perform LOSS OF VERNIERS (ORB OPS, RCS), then:

9. Go to MAL, EPS SSR-103, BUS LOSS: CNTLBC1

CNTL BC2

L1 1. TOP EVAP HTR DUCT sel – A

If HI LOAD EVAP ENA:

2. HI LOAD DUCT HTR sel – A

C3 3. S-BD PM CNTL – PNL,CMD

NOTE

If S-BD mode TDRS or STDN HI, xmit may be delayed 140 sec for PA warmup. Receive not affected

4. GNC 23 RCS

Ovrd F2 MANF STAT – CL

A12 5. APU HTR

GAS GEN/FU PUMP 2 – B AUTO

TK/FU LN/H2O SYS 1A – AUTO

2B – AUTO

C3 6. If DAP MAN MODE reqd: Use fwd station

7. Perform LOSS OF VERNIERS (ORB OPS, RCS), then:

8. Go to MAL, EPS SSR-104, BUS LOSS: CNTLBC2

CNTL BC3

L1 1. TOP EVAP HTR NOZ R – B AUTO

DUCT sel – A

If HI LOAD EVAP ENA:

2. HI LOAD DUCT HTR sel – A

If reqd for att control:

Do not perform next step if BC1,2,3 unpwrd:

3. GNC 23 RCS

Ovrd F2 MANF STAT – OP

A12 4. APU HTR

GAS GEN/FU PUMP 2 – A AUTO

TK/FU LN/H2O SYS 1A – AUTO

2B – AUTO

A6 5. If DAP MAN MODE reqd: Use aft station

6. Go to MAL, EPS SSR-105, BUS LOSS: CNTLBC3

CNTL CA1

NOTE
GPC 3,5 – no BFS engage capability. √MCC for possible move of BFS FUNCTION

A12 1. APU HTR
GAS GEN/FU PUMP 2 – A AUTO
3 – B AUTO
TK/FU LN/H2O SYS 2A – AUTO
3B – AUTO

If CA1,2,3 unpwrd:

2. GNC 23 RCS
Ovrd F3 MANF STAT – CL

3. Go to MAL, EPS SSR-106, BUS LOSS: CNTLCA1

CNTL CA2

L1 1. FLASH EVAP CNTLR PRI A – OFF
B – ON

2. GNC 23 RCS
Ovrd F3 MANF STAT – CL

A12 3. APU HTR
GAS GEN/FU PUMP 3 – B AUTO
TK/FU LN/H2O SYS 2A – AUTO
3B – AUTO

C3 4. If DAP MAN MODE reqd: Use fwd station

5. Go to MAL, EPS SSR-107, BUS LOSS: CNTLCA2

ESS

CNTL CA3

A12 1. APU HTR
GAS GEN/FU PUMP 3 – A AUTO
TK/FU LN/H2O SYS 2A – AUTO
3B – AUTO

2. Go to MAL, EPS SSR-108, BUS LOSS: CNTLCA3

ESS 1BC DA1 (Entire Bus)

NOTE
Pri C/W Sys & Matrix lost (B/U C/W Tone remains). GPC 1,4 lost if pwr cycled OFF or ON

1. Perform FC1 SHUTDN (Cue Card), then:

If calling proc complete:

2. Go to MAL, EPS SSR-70, BUS LOSS: ESS1BC DA1

ESS 1BC MPC1

1. Perform FC1 SHUTDN (Cue Card), then:
2. Go to MAL, EPS SSR-72, BUS LOSS: ESS1BC MPC1

ESS 1BC FD

NOTE
GPC 1,4 lost if pwr cycled OFF or ON

1. Perform FC1 SHUTDN (Cue Card), then:
2. Go to MAL, EPS SSR-74, BUS LOSS: ESS1BC FD

ESS 1BC O13&R14

ESS

NOTE
Pri C/W Sys & Matrix lost (B/U C/W Tone remains)

Go to MAL, EPS SSR-75, BUS LOSS: ESS1BC O13&R14

ESS 2CA DA2 (Entire Bus)

NOTE
C/W B PWR SPLY lost (Pri C/W remains). FAULT SUMM MSGs must be reset to avoid C/W Tone masking. GPC 2,5 lost if pwr cycled OFF or ON

C3
1. AUD CTR – 2
2. Perform FC2 SHUTDN (Cue Card), then:

If calling proc complete:

3. Go to MAL, EPS SSR-80, BUS LOSS: ESS2CA DA2

ESS 2CA MPC2

1. Perform FC2 SHUTDN (Cue Card), then:
2. Go to MAL, EPS SSR-82, BUS LOSS: ESS2CA MPC2

ESS 2CA FD

NOTE
GPC 2,5 lost if pwr cycled OFF or ON

1. Perform FC2 SHUTDN (Cue Card), then:
2. Go to MAL, EPS SSR-83, BUS LOSS: ESS2CA FD

ESS 2CA O13&R14

NOTE
C/W B PWR SPLY lost (Pri C/W remains). FAULT SUMM MSGs must be reset to avoid C/W Tone masking

C3
1. AUD CTR – 2
2. Go to MAL, EPS SSR-84, BUS LOSS: ESS2CA O13&R14

ESS 3AB DA3 (Entire Bus)

NOTE
Do not engage BFS. Computer Status Matrix lost. GPC 3 lost if pwr cycled OFF or ON

1. Perform FC3 SHUTDN (Cue Card), then:

If calling proc complete:

2. Go to MAL, EPS SSR-90, BUS LOSS: ESS3AB DA3

ESS 3AB MPC3

1. Perform FC3 SHUTDN (Cue Card), then:
2. Go to MAL, EPS SSR-92, BUS LOSS: ESS3AB MPC3

ESS 3AB FD

NOTE
Do not engage BFS. GPC 3 lost if pwr cycled OFF or ON

1. Perform FC3 SHUTDN (Cue Card), then:
2. Go to MAL, EPS SSR-93, BUS LOSS: ESS3AB FD

GUIDANCE, NAVIGATION, AND CONTROL

GNC

OV103,104

SINGLE STRING GPS TROUBLESHOOTING

1. VERIFY GPS FUNCTIONING PROPERLY

GNC 55 GPS STATUS

CRT √STAT = BLANK or BATT
√MODE = INS
√DG FAIL = BLANK
√QA1 P 1σ ≤ 175 (can be > 175 for no more than 5 min)
√LAST SEL FIL UPDATE < 30 min

If GPS functioning properly for 10 min, √MCC >>
(if no comm, go to GPS INCORPORATION (ORBIT OPS, GNC)) >>

2. GPS TROUBLESHOOTING

√GPS TO NAV INH – ITEM 36 EXEC (*)

A. GPS sw Config

A13 √GPS PWR – ON

If OV103:
√GPS PRE AMPL UC – MNC
√LC – MNC

If OV104:
√GPS PRE AMPL UC – ON
√LC – ON

```
*   If receiver not pwrd,        *
*     GPS PWR – ON               *
*  √GPS ENCRYPT – NORM           *
*   Wait at least 30 sec         *
*   GNC I/O RESET                *
*                                *
*  GNC 55 GPS STATUS             *
*   INIT – ITEM 15 EXEC (*)      *
*  √MODE – INIT                  *
*   NAV – ITEM 18 EXEC (*)       *
*  √MODE – INS                   *
```

A13

CRT

B. GPS Filter Restart

√MODE – INS
If not in INS MODE, go to GPS INIT, step C, next page

CRT RESTART – ITEM 21 EXEC (*)
Wait 5 sec
√RESTART – ITEM 21 (no *)

Cont next page

NOTE

GPS may take up to 1 min for steady state performance

Repeat step 1. If GPS not functioning properly within 1 min, perform step C below

C. GPS INIT

INIT – ITEM 15 EXEC (*****)
√MODE – INIT
NAV – ITEM 18 EXEC (*****)
√MODE – INS

NOTE

GPS may take up to 5 min for steady state performance

Repeat step 1. If GPS not functioning properly within 5 min, perform step D below

D. GPS Long Pwr Cycle

√NAV – ITEM 18 (*****)
A13 GPS PWR – OFF (at least 30 sec),ON (expect 'BCE STRG 2 GPS' msg)
Wait at least 30 sec
CRT GNC I/O RESET
INIT – ITEM 15 EXEC (*****)
√MODE – INIT
NAV – ITEM 18 EXEC (*****)
√MODE – INS

NOTE

May take up to 12 min to acquire 4 or more satellites

Check SATELLITES – tracking at least 4 satellites

Repeat step 1. If GPS not functioning properly within 12 min, perform step E next page

Cont next page

E. GPS S/TEST

√NAV – ITEM 18 (*****)
S/TEST – ITEM 12 EXEC (*****)
√'BIT' in STAT field after ~6 sec
Wait for 'BIT' to clear after ~2 min
√S/TEST '↑'; if '↓', go to GPS SAFING (step 3)
NAV – ITEM 18 EXEC (*****)
√MODE – INS

Repeat step 1. If GPS not functioning properly, perform step 3 below

3. GPS SAFING

GNC 55 GPS STATUS

CRT √GPS TO G&C INH – ITEM 33 EXEC (*****)
√GPS TO NAV INH – ITEM 36 EXEC (*****)

GUIDANCE, NAVIGATION, AND CONTROL

GNC

OV105

THREE STRING GPS TROUBLESHOOTING

1. VERIFY GPS FUNCTIONING PROPERLY

GNC 55 GPS STATUS

CRT √STAT = BLANK or BATT
√MODE = INS
√DG FAIL = BLANK
√QA1 P 1σ ≤ 650 (can be > 650 for no more than 5 min)
√LAST SEL FIL UPDATE < 30 min

If GPS functioning properly for 10 min, √MCC >>
(if no comm, go to GPS INCORPORATION (ORBIT OPS, GNC)) >>

2. GPS TROUBLESHOOTING
√GPS TO NAV INH – ITEM 36 EXEC (*)

A. GPS sw Config

O7 √GPS PWR (three) – ON
√PRE AMPL (six) – ON

```
*  If receiver not pwrd,              *
O7 *    GPS PWR – ON                  *
*  √GPS ENCRYPT – NORM               *
*  Wait at least 30 sec              *
CRT *  GNC I/O RESET                 *
*                                    *
*  GNC 55 GPS STATUS                 *
*  INIT – ITEM 14(15,16) EXEC (*)    *
*  √MODE – INIT                      *
*  NAV – ITEM 17(18,19) EXEC (*)     *
*  √MODE – INS                       *
```

B. GPS Filter Restart

√MODE – INS
If not in INS MODE, go to GPS INIT, step C, next page
CRT RESTART – ITEM 20(21,22) EXEC (*)
Wait 5 sec
√RESTART – ITEM 20(21,22) (no *)

NOTE
GPS may take up to 1 min for steady state performance

Repeat step 1. If GPS not functioning properly within 1 min, perform step C, next page

Cont next page

C. GPS INIT

INIT – ITEM 14(15,16) EXEC (*****)
√MODE – INIT
NAV – ITEM 17(18,19) EXEC (*****)
√MODE – INS

NOTE

GPS may take up to 5 min for steady state performance

Repeat step 1. If GPS not functioning properly within 5 min, perform step D below

D. GPS Long Pwr Cycle

√NAV – ITEM 17(18,19) (*****)
O7 GPS PWR – OFF (at least 30 sec),ON
(expect 'BCE STRG X GPS' msg)
Wait at least 30 sec
CRT GNC I/O RESET
INIT – ITEM 14(15,16) EXEC (*****)
√MODE – INIT
NAV – ITEM 17(18,19) EXEC (*****)
√MODE – INS

NOTE

May take up to 12 min to acquire 4 or more satellites

Check SATELLITES – tracking at least 4 satellites

Repeat step 1. If GPS not functioning properly within 12 min, perform step E

E. GPS S/TEST

√NAV – ITEM 17(18,19) (*****)
S/TEST – ITEM 12 EXEC (*****)
√'BIT' in STAT field after ~6 sec
Wait for 'BIT' to clear after ~2 min
√S/TEST '↑'; if '↓', go to GPS SAFING (step 3)
NAV – ITEM 17(18,19) EXEC (*****)
√MODE – INS

Repeat step 1. If GPS not functioning properly, perform step 3, next page

Cont next page

3. GPS SAFING

If GPS not functioning properly, desel aff GPS

GNC 55 GPS STATUS

CRT DES RCVR 1(2,3) – ITEM 26(27,28) EXEC (*****)

If no GPS functioning properly:

√GPS TO G&C INH – ITEM 33 EXEC (*****)

√GPS TO NAV INH – ITEM 36 EXEC (*****)

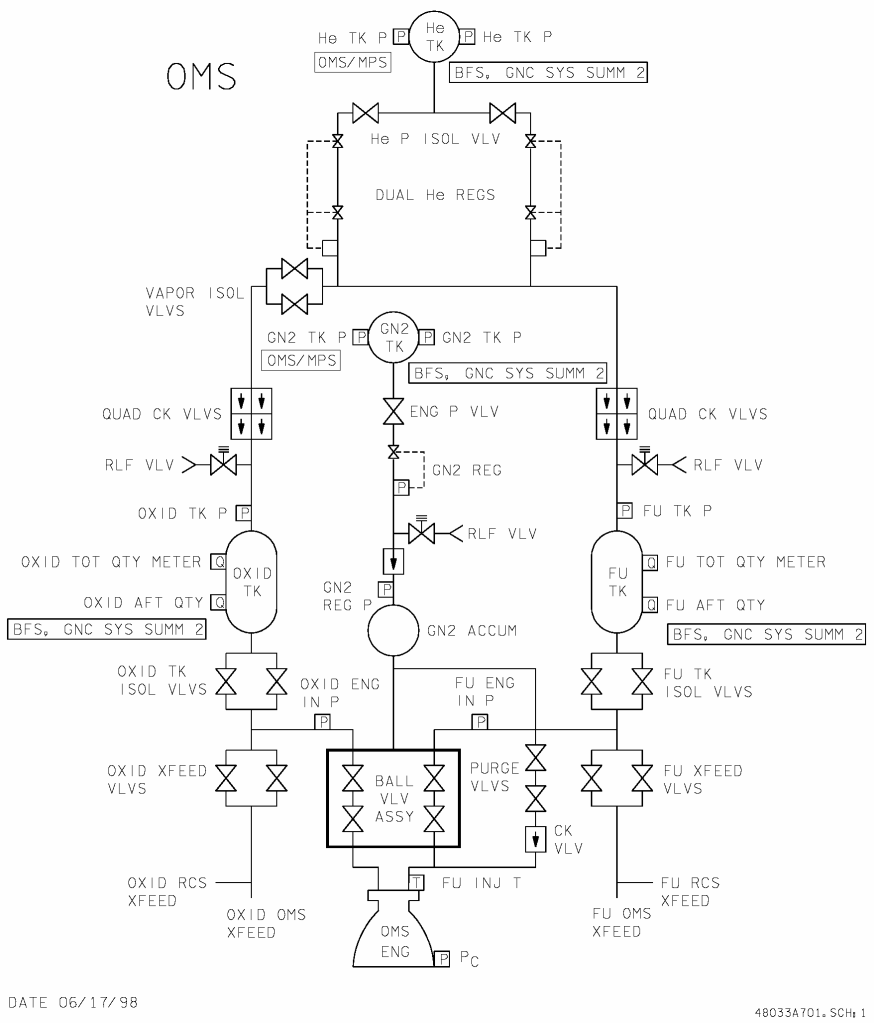
OMS
He TK P
OMS/MPS
He TK
He TK P
BFS, GNC SYS SUMM 2
He P ISOL VLV
DUAL He REGS
VAPOR ISOL VLVS
GN2 TK P
OMS/MPS
GN2 TK
GN2 TK P
BFS, GNC SYS SUMM 2
QUAD CK VLVS
ENG P VLV
QUAD CK VLVS
RLF VLV
GN2 REG
RLF VLV
OXID TK P
RLF VLV
FU TK P
OXID TOT QTY METER
OXID TK
FU TOT QTY METER
OXID AFT QTY
GN2 REG P
FU TK
FU AFT QTY
BFS, GNC SYS SUMM 2
GN2 ACCUM
BFS, GNC SYS SUMM 2
OXID TK ISOL VLVS
OXID ENG IN P
FU ENG IN P
FU TK ISOL VLVS
OXID XFEED VLVS
BALL VLV ASSY
PURGE VLVS
FU XFEED VLVS
CK VLV
OXID RCS XFEED
FU INJ T
FU RCS XFEED
OXID OMS XFEED
OMS ENG
FU OMS XFEED
PC
DATE 06/17/98
48033A701.SCH: 1

OMS

OMS SECURE

1. OMS ENG (two) – OFF

If OMS XFEED config:

2. (Receiving) OMS XFEED (two) – CL (tb-CL)
3. (Aff) OMS XFEED (two) – CL (tb-CL)
   TK ISOL (two) – CL (tb-CL)
   He PRESS/VAP ISOL (two) – CL

OMS TK P (FU and OX) HIGH

GNC SYS SUMM 2

1. √(Aff) OMS He PRESS/VAP ISOL (two) – CL
2. L(R) OMS DUAL He REG failed open

XFEED: R OMS to L OMS

GNC 23 RCS

NOTE
Proc only to be used preburn

1. DAP: FREE
2. √L,R OMS XFEED (four) – CL (tb-CL)
3. RCS TK ISOL (six) – CL (tb-CL)
   XFEED (four) – OP (tb-OP)
4. If RCS MANF P (OX and FU) > 130, continue; otherwise, √MCC >>
5. √R OMS TK ISOL (two) – OP (tb-OP)
   L OMS TK ISOL (two) – CL (tb-CL)
   L,R OMS XFEED B (two) – OP (tb-OP)
6. RCS XFEED (four) – CL (tb-CL)
   TK ISOL (six) – OP (tb-OP)
7. DAP: as reqd

XFEED: L OMS to R OMS

GNC 23 RCS

NOTE
Proc only to be used preburn

1. DAP: FREE
2. √L,R OMS XFEED (four) – CL (tb-CL)
3. RCS TK ISOL (six) – CL (tb-CL)
   XFEED (four) – OP (tb-OP)
4. If RCS MANF P (OX and FU) > 130, continue; otherwise, √MCC >>
5. √L OMS TK ISOL (two) – OP (tb-OP)
   R OMS TK ISOL (two) – CL (tb-CL)
   L,R OMS XFEED B (two) – OP (tb-OP)
6. RCS XFEED (four) – CL (tb-CL)
   TK ISOL (six) – OP (tb-OP)
7. DAP: as reqd

XFEED RETURN: **OMS**

L,R OMS XFEED (four) – CL (tb-CL)
TK ISOL (four) – OP (tb-OP)

OMS N2 TK P LOW

GNC SYS SUMM 2

1. √N2 TK P < 1200 or decr (OMS/MPS and SPEC)

If OMS/MPS and SPEC disagree (inst prob):

2. Go to MAL, OMS, 11.1a, L(R) OMS TK P 1 >>

If OMS/MPS and SPEC agree:

3. √(Aff) OMS ENG – OFF
4. Go to MAL, OMS, 11.1a, L(R) OMS TK P 4

OMS N2 REG P LOW

GNC SYS SUMM 2

1. √OMS ENG (two) – OFF
2. Go to MAL, OMS, 11.1a, L(R) OMS TK P 10

OMS N2 REG P HIGH

GNC SYS SUMM 2

1. √OMS ENG (two) – OFF
2. Go to MAL, OMS, 11.1a, L(R) OMS TK P 21

OMS TK P (FU or OX) LOW

GNC SYS SUMM 2

1. Check with corresp ENG IN P

If ENG IN P disagrees:

2. Go to MAL, OMS, 11.1a, L(R) OMS TK P 29 >>

If aff OMS feeding OMS/RCS I'CNCT:

If both OX and FU TK P LOW:

3. (Aff) OMS He PRESS/VAP ISOL A – OP
   Wait 10 sec
   OMS He PRESS/VAP ISOL A – CL
4. If TK P incr >>
5. If TK P not incr:
   (Aff) OMS He PRESS/VAP ISOL B – OP
   Wait 10 sec
   OMS He PRESS/VAP ISOL B – CL

If TK P incr:

6. Go to step 8

If TK P still not incr:

7. Perform I'CNCT RETURN (RCS), 8-4, then:
8. Go to MAL, OMS, 11.1a, L(R) OMS TK P 22 >>

If OX or FU (not both) TK P LOW:

Secure RCS and OMS:

9. DAP: FREE
10. L,R RCS MANF ISOL (ten) – CL (tb-CL)
    XFEED (four) – CL (tb-CL)
11. (Aff) OMS XFEED (two) – CL (tb-CL)
    TK ISOL (two) – CL (tb-CL)
    He PRESS/VAP ISOL (two) – CL

√SINGLE MANF (√MANF P)

12. If leak found: Return to desired config except leave aff MANF closed >>

√TK LEG (√TWO MANF P)

13. If leak found: Return to desired config except leave TK ISOL (1/2 or 3/4/5), MANFs, and corresp XFEED vlvs closed
14. If MANF 3/4/5 Leg leak: Go to LOSS OF VERNIERS (ORB OPS, RCS) >>

Cont next page

√OMS TK and OMS INLET LINE (√OMS TK P and OMS IN P)

If leak found:

15. √L,R RCS He PRESS A(B) (two) – GPC (tb-OP)
    B(A) (two) – CL (tb-CL)
    TK ISOL (six) – OP (tb-OP)
    MANF ISOL (ten) – OP (tb-OP), GPC
16. GNC 23 RCS
    OMS PRESS ENA OFF – ITEM 7 EXEC
17. DAP: as reqd
18. If OMS PRPLT TK P decr:
    Go to LEAKING OMS PRPLT/He BURN >>
19. If OMS IN P decr >>

√XFEED LINES

20. GNC 23 RCS
    RCS L – ITEM 2 EXEC

If XFEED P decr or zero:

21. √L,R RCS He PRESS A(B) (two) – GPC (tb-OP)
    B(A) (two) – CL (tb-CL)
    TK ISOL (six) – OP (tb-OP)
    MANF ISOL (ten) – OP (tb-OP), GPC
22. GNC 23 RCS
    OMS PRESS ENA OFF – ITEM 7 EXEC
23. DAP: as reqd
24. Do not XFEED/I'CNCT >>

If leak not found:

25. √L,R RCS He PRESS A(B) (two) – GPC (tb-OP)
    B(A) (two) – CL (tb-CL)
    TK ISOL (six) – OP (tb-OP)
    MANF ISOL 1,2,3,4 (eight) – OP (tb-OP), GPC
26. GNC 23 RCS
    OMS PRESS ENA OFF – ITEM 7 EXEC
27. DAP: as reqd, PRI(ALT) only
28. Go to MAL, OMS, 11.1a, L(R) OMS TK P 36 >>

If aff OMS not feeding OMS/RCS I'CNCT:

29. Perform OMS SECURE, then:
30. If OMS PRPLT TK P decr:
    Go to LEAKING OMS PRPLT/He BURN >>
31. If either OMS IN P decr >>

If leak not found:

32. Go to MAL, OMS, 11.1a, L(R) OMS TK P 47

OPCL/ALL/GEN M

OMS He TK P LOW

GNC SYS SUMM 2

1. √He TK P < 1500 or decr abnormal (OMS/MPS and SPEC)

If OMS/MPS and SPEC disagree (inst prob):

2. Go to MAL, OMS, 11.1a, L(R) OMS TK P 63 >>

3. √OMS He PRESS/VAP ISOL (two) – CL

If He TK P still decr:

4. (Aff) OMS He PRESS/VAP ISOL (two) – OP
5. If not at max blowdown (QTY > 39%):
   Go to LEAKING OMS PRPLT/He BURN >>
6. If I'cnct: Perform I'CNCT RETURN (RCS), 8-4, then:

If OMS TK P FU/OX decr:

7. Go to OMS TK P (FU or OX) LOW >>

If neither decr (He leg leak):

8. √MCC for OMS Burn deltas

LEAKING OMS PRPLT/He BURN

1. Install LEAKING OMS PRPLT/He BURN (Cue Card) and ON-ORBIT OMS BURN MONITOR (Cue Card) (C2 wedge)
2. GNC 55 GPS STATUS
   √GPS TO NAV – INH (*****)
3. If MM106: PASS, OPS 301 PRO
   BFS, OPS 301 PRO
4. GNC, OPS 202(302) PRO
5. GNC XXXXX MNVR EXEC leaking OMS – sel, and determine out-of-plane or retrograde burn based on TIG (MCC or msg)
6. Enter PEG 7 TARGET data:
   If out-of-plane:
   - Enter ΔVX and ΔVZ = 0.0
   - For PRPLT LK, enter ΔVY ±500
   - For He LK, enter ±ΔVY from LEAKING OMS He ΔV TABLE

   If retrograde:
   - Enter ΔVY and ΔVZ = 0.0
   - For PRPLT LK, enter -ΔVX from ΔVX vs ORB ALT chart
   - For He LK, enter -ΔVX from LEAKING OMS He ΔV TABLE, steps 1-4
7. Load TARGET DATA:
   LOAD – ITEM 22 EXEC (if retrograde burn, √TGT HP = 95±1; adjust ΔVX as reqd)
   TIMER – ITEM 23 EXEC

If OPS 2:

8. √Pri RJD LOGIC,DRIVER (sixteen) – ON
   √cb L,R DDU (four) – cl
   DAP: B/AUTO/PRI
   DAP TRANS: NORM/PULSE/PULSE

If OPS 3:

9. GNC 23 RCS
   L1A or L3A – desel (N/A He leak)
   R1A or R3A – desel (N/A He leak)
10. Mnvr to burn att. When mnvr complete, update TIG if appropriate
11. GMBL CK sel sys

Cont next page

At TIG-4, perform OMS burn prep:

12. (Leaking) OMS TK ISOL (two) – OP (tb-OP)
    √XFEED (four) – CL (tb-CL)
    He PRESS/VAP ISOL A – OP (wait 2 sec),
    B – OP
13. Perform burn using <u>LEAKING OMS PRPLT/He BURN</u> (Cue Card), then postburn:

If OPS 3:

14. GNC 23 RCS
    AFT jets – resel (N/A He leak)
15. FLT CNTLR PWR (two) – OFF
    cb L,R DDU (four) – as reqd
16. (Aff) OMS He PRESS/VAP ISOL (two) – CL
    TK ISOL (two) – CL (tb-CL)
17. DAP: INRTL
18. If OPS 2: DAP TRANS: PULSE/PULSE/PULSE
    GNC, OPS 201 PRO
    If MM 302: GNC, OPS 301 PRO
19. DAP – as reqd

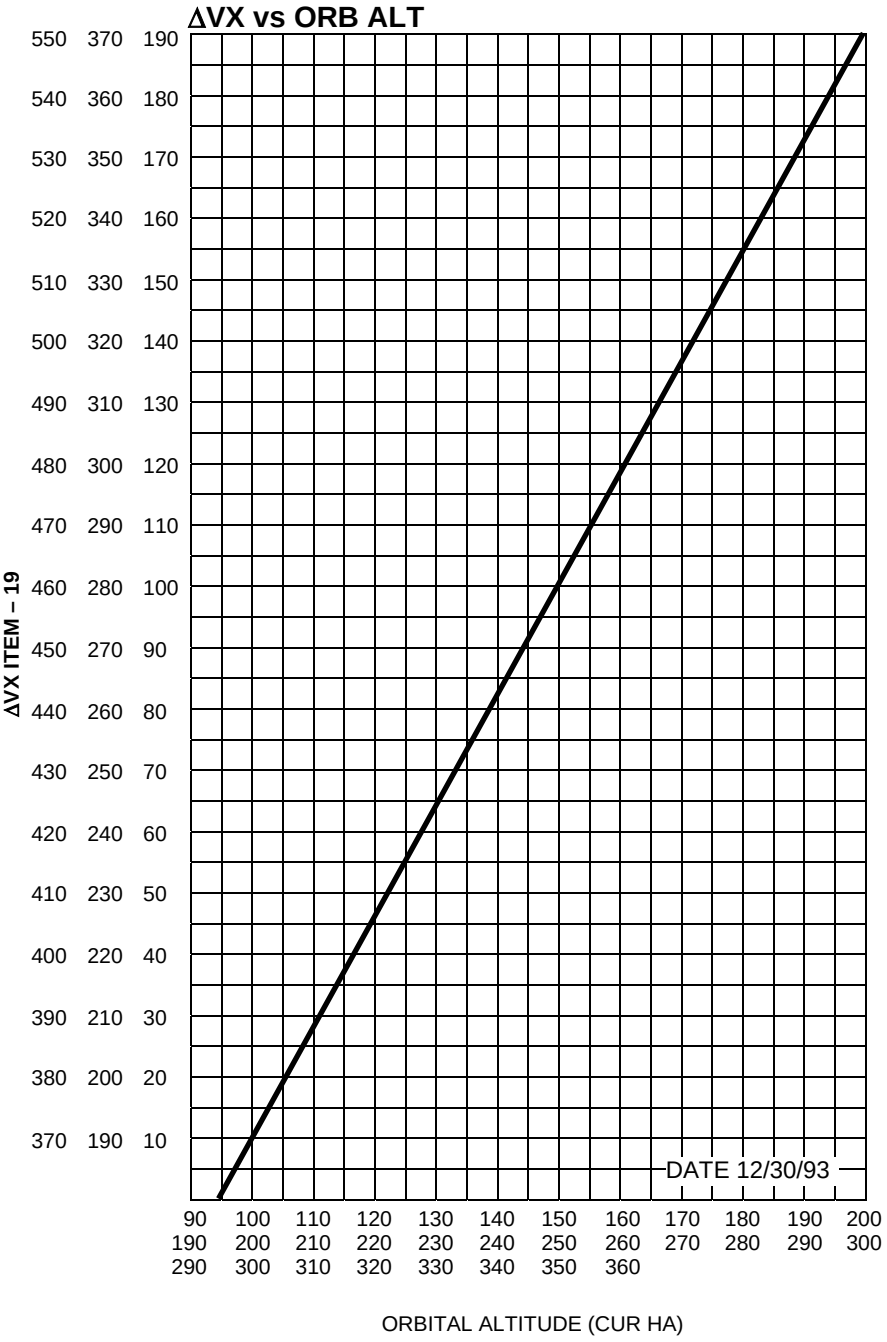
ΔVX vs ORB ALT
ΔVX ITEM – 19
550 370 190
540 360 180
530 350 170
520 340 160
510 330 150
500 320 140
490 310 130
480 300 120
470 290 110
460 280 100
450 270 90
440 260 80
430 250 70
420 240 60
410 230 50
400 220 40
390 210 30
380 200 20
370 190 10
DATE 12/30/93
90 190 290
100 200 300
110 210 310
120 220 320
130 230 330
140 240 340
150 250 350
160 260 360
170 270
180 280
190 290
200 300
ORBITAL ALTITUDE (CUR HA)

LEAKING OMS He ΔV TABLE

1. Pick ΔV from table to achieve MAX BLOWDOWN

Affected OMS % (QTY)	ΔV
95	352
90	320
85	289
80	257
75	226
70	195
65	164
60	133
55	102
50	71
45	40
40	10

If retrograde burn:

2. Verify ΔVX vs ORB ALT

If ΔV from table < ΔVX from chart:

3. Use ΔV from table (Hp will be above 95 nm) >>

If ΔV from table > ΔVX from chart:

4. Use ΔVX from chart to take Hp to 95 nm, then repeat proc to burn out-of-plane to achieve max blowdown (39%)

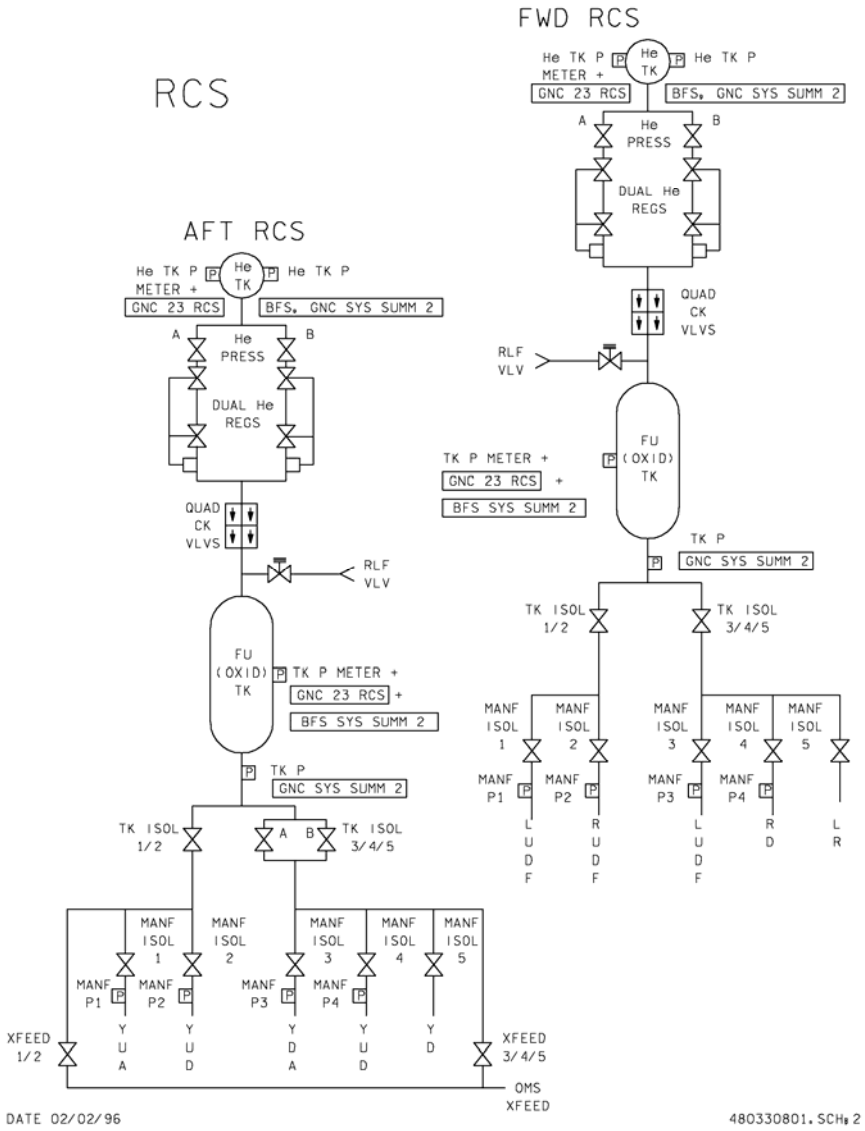
RCS
FWD RCS
He TK P METER +
He TK
He TK P
GNC 23 RCS
BFS, GNC SYS SUMM 2
A
B
He PRESS
DUAL He REGS
QUAD CK VLVS
RLF VLV
FU (OXID) TK
TK P METER +
GNC 23 RCS +
BFS SYS SUMM 2
TK P
GNC SYS SUMM 2
TK ISOL 1/2
TK ISOL 3/4/5
MANF ISOL 1
MANF ISOL 2
MANF ISOL 3
MANF ISOL 4
MANF ISOL 5
MANF P1
MANF P2
MANF P3
MANF P4
LUDF
RUDF
LUDF
RD
LR
AFT RCS
XFEED 1/2
YUA
YUD
YDA
YUD
YD
XFEED 3/4/5
OMS XFEED
DATE 02/02/96
480330801.SCH: 2

RCS SECURE (FWD,AFT)

If normal config:

1. RCS MANF ISOL (five) – CL (tb-CL)
   XFEED (two) – CL (tb-CL)
   TK ISOL (all) – CL (tb-CL)
   He PRESS (two) – CL (tb-CL) >>

If (feeding) XFEED:

2. L,R RCS MANF ISOL (ten) – CL (tb-CL)
   (Receiving) XFEED (two) – CL (tb-CL)
   (Feeding) XFEED (two) – CL (tb-CL)
   TK ISOL (three) – CL (tb-CL)
   He PRESS (two) – CL (tb-CL) >>

If (receiving) XFEED or OMS/RCS I'CNCT:

3. √RCS TK ISOL (three) – CL (tb-CL)
   He PRESS (two) – CL (tb-CL)

I'CNCT: L OMS to RCS

GNC 23 RCS

NOTE
Gauging not avail in OPS 3

1. DAP: FREE
2. L,R RCS TK ISOL (six) – CL (tb-CL)
   XFEED (four) – OP (tb-OP)
3. If RCS MANF P (OX and FU) > 130 continue;
   otherwise, √MCC >>
4. √L OMS He PRESS/VAP ISOL (two) – CL
   TK ISOL (two) – OP (tb-OP)
   √R OMS XFEED (two) – CL (tb-CL)
   L OMS XFEED A – CL (tb-CL)
   B – OP (tb-OP)
5. L OMS TO AFT – ITEM 5 EXEC
6. DAP: as reqd

I'CNCT: R OMS to RCS

GNC 23 RCS

NOTE
Gauging not avail in OPS 3

1. DAP: FREE
2. L,R RCS TK ISOL (six) – CL (tb-CL)
   XFEED (four) – OP (tb-OP)
3. If RCS MANF P (OX and FU) > 130 continue;
   otherwise, √MCC >>
4. √R OMS He PRESS/VAP ISOL (two) – CL
   TK ISOL (two) – OP (tb-OP)
   √L OMS XFEED (two) – CL (tb-CL)
   R OMS XFEED A – CL (tb-CL)
   B – OP (tb-OP)
5. R OMS TO AFT – ITEM 6 EXEC
6. DAP: as reqd

OPCL/ALL/GEN M

I'CNCT TK SWITCH: GNC 23 RCS
From L to R OMS FEED

1. DAP: FREE
2. L OMS XFEED B – CL (tb-CL)
   R OMS XFEED B – OP (tb-OP)
3. R OMS TO AFT – ITEM 6 EXEC
4. DAP: as reqd

I'CNCT TK SWITCH: GNC 23 RCS
From R to L OMS FEED

1. DAP: FREE
2. R OMS XFEED B – CL (tb-CL)
   L OMS XFEED B – OP (tb-OP)
3. L OMS TO AFT – ITEM 5 EXEC
4. DAP: as reqd

I'CNCT RETURN (OPS 2,3) GNC 23 RCS

1. DAP: FREE
2. OMS OFF – ITEM 7 EXEC
3. √OMS TK ISOL (four) – OP (tb-OP)
   XFEED (four) – CL (tb-CL)
4. L,R RCS XFEED (four) – CL (tb-CL)
   TK ISOL (six) – OP (tb-OP)
5. DAP: as reqd

XFEED: R RCS to L RCS

1. DAP: FREE
2. √L,R OMS XFEED (four) – CL (tb-CL)
3. RCS TK ISOL (six) – CL (tb-CL)
   XFEED (four) – OP (tb-OP)
4. If RCS MANF P (OX and FU) > 130, continue;
   otherwise, √MCC >>
5. R RCS: √He PRESS A(B) – GPC (tb-OP)
   √B(A) – CL (tb-CL)
   TK ISOL (three) – OP (tb-OP)
6. MSTR RCS XFEED – FEED FROM R
7. DAP: as reqd

XFEED: L RCS to R RCS

1. DAP: FREE
2. √L,R OMS XFEED (four) – CL (tb-CL)
3. RCS TK ISOL (six) – CL (tb-CL)
   XFEED (four) – OP (tb-OP)
4. If RCS MANF P (OX and FU) > 130, continue;
   otherwise, √MCC >>
5. L RCS: √He PRESS A(B) – GPC (tb-OP)
   √B(A) – CL (tb-CL)
   TK ISOL (three) – OP (tb-OP)
6. MSTR RCS XFEED – FEED FROM L
7. DAP: as reqd

XFEED RETURN: RCS

1. DAP: FREE
2. MSTR RCS XFEED – OFF
3. AFT L,R RCS XFEED (four) – CL (tb-CL)
   TK ISOL (six) – OP (tb-OP)
   √He PRESS A(B) (two) – GPC (tb-OP)
   √B(A) (two) – CL (tb-CL)
4. DAP: as reqd

RCS RM LOSS

GNC 23 RCS

If vernier jets:
- If loss of FAIL OFF detection:
  1. Resel >>
- If BCE BYP (B or D), MDM fail, or loss of LK detection:
  - If only L5L and/or R5R aff:
    2. Aff jet – desel >>
  - If L5D,R5D,F5L, and/or F5R aff:
    3. (Aff) RCS MANF ISOL 5 – CL (tb-CL)
    4. Go to LOSS OF VERNIERS (ORB OPS, RCS) >>

If primary jets:
- If loss of FAIL OFF or LK detection:
  5. Aff jet – DES INH (*) (reprioritize)
  6. If auto deselected: resel
  7. At seat ingress: Go to AFT(FWD) RCS RM LOSS (ENT PKT, RCS) >>
- If loss of FAIL ON detection:
  8. If att control still avail: Ovrd STAT closed for all MANFs on (aff) RJD and (aff) RJD – OFF
  9. Aff jet – DES INH twice (reprioritize, reset RM)
  10. At seat ingress: Go to AFT(FWD) RCS RM LOSS (ENT PKT, RCS) >>
- If BCE BYP (B or D), or MDM fail:
  11. If att control still avail: Leave STAT closed for all MANFs on (aff) RJD and (aff) RJD – OFF
  12. Aff jet – DES INH twice (reprioritize, reset RM)
  13. At seat ingress: Go to AFT(FWD) RCS RM LOSS (ENT PKT, RCS)

RM DLMA MANF

1. √(Aff) RCS MANF ISOL – GPC
2. ♦ RCS MANF VLVS OVRD – ITEM 40(41,42,43,44) EXEC
3. Go to MAL, RCS, 10.1b, RM DLMA MANF 1

RCS TK P LOW (FU or OX)

GNC SYS SUMM 2

1. √FU(OX) He P (CRT & meter)

If decr:

2. Go to RCS LEAK ISOL, step 1 >>

If not decr:

3. (Aff) RCS He PRESS A(B) – CL (tb-CL)
   B(A) – OP (tb-OP), GPC (tb-OP)
4. Go to MAL, RCS, 10.1a 64

RCS TK P HIGH (FU or OX)

GNC 23 RCS

1. (Aff) RCS He PRESS (two) – CL (tb-CL)
2. Go to MAL, RCS, 10.1a 55

RCS JET FAIL (ON)

GNC 23 RCS

1. (Aff) RCS MANF ISOL – CL (tb-CL)
2. Go to MAL, RCS, 10.1a 13

RCS JET FAIL (LEAK)

GNC 23 RCS

If RCS FU and OX qty diverging:

1. (Aff) RCS MANF ISOL – CL (tb-CL)

2. Go to MAL, RCS, 10.1a 21

RCS JET FAIL (OFF)

GNC 23 RCS

If FAIL OFF(s) caused by pwrdn of RJDs:

1. RJD LOGIC,DRIVER – ON
2. JET RESET – ITEM 45 EXEC
3. Reset all FAIL OFF jets
4. JET RESET – ITEM 45 EXEC

Otherwise:

5. Go to MAL, RCS, 10.1a 1

1. If FU or OX TK P high, go to RCS TK P HIGH (FU or OX) >>

If FU or OX TK P normal:

2. √FU(OX) He P (CRT and O3 meter) decr
3. DAP: FREE

When proc complete:

4. If not loss of VERNs: DAP as reqd

SECURE RCS

5. Perform aff RCS SECURE, then:

If aff RCS was receiving XFEED/I'CNCT when leak occurred:

6. Go to step 10

√SINGLE MANF

If only one MANF P decr:

7. Return to normal config except leave aff MANF closed >>

√PRPLT TK LEG (TWO MANF P)

If MANF 1,2 or MANF 3,4 P decr:

8. Return to normal config except leave aff TK ISOL (1/2 or 3/4/5), MANFs, and corresp XFEED vlvs closed

If MANF 3/4/5 leg leak:

9. Go to LOSS OF VERNIERS (ORB OPS, RCS) >>

Cont next page

√He TK

If He P decr:

10. √MCC for use of MAL, RCS SSR-5, LEAKING RCS PRPLT/ He BURN

If no comm or burn not performed:

- If AFT RCS:
  - 11. Perform XFEED from leaking RCS, then:
  - When He TK P < 456:
    - 12. (Aff) RCS He PRESS A,B – CL (tb-CL)
    - 13. Go to I'CNCT: L(R) OMS to RCS >>
- If FWD RCS:
  - 14. Return to normal config
  - When He TK P < 456:
    - 15. FWD RCS He PRESS A,B – CL (tb-CL)
  - When PRPLT TK P < 190:
    - 16. Perform RCS SECURE (FWD), then:
    - 17. Go to LOSS OF VERNIERS (ORB OPS, RCS) >>

If burn performed:

- If AFT RCS >>
- If FWD RCS:
  - When PRPLT TK P < 190:
    - 18. Perform RCS SECURE (FWD), then:
    - 19. Go to LOSS OF VERNIERS (ORB OPS, RCS) >>

√PRPLT TK

If PRPLT TK P decr:

20. Go to MAL, RCS SSR-5, LEAKING RCS PRPLT/He BURN >>

√He LEG

21. (Aff) RCS He PRESS A,B – OP (tb-OP)

If He P decr:

If AFT RCS:

- 22. (Aff) RCS He PRESS A,B – CL (tb-CL)
- 23. Perform I'CNCT: L(R) OMS to RCS, then:
- 24. (Aff) MANFs (all) – OP (tb-OP), GPC
- Prior to deorb TIG:
  - 25. Return to RCS straight feed
  - 26. (Aff) RCS He PRESS A,B – CL (tb-CL)
  - 27. Cycle He PRESS A(B) to maintain PRPLT TK P 220-245
- When He TK P < 456:
  - 28. Perform I'CNCT: L(R) OMS to RCS, then:
- At EI:
  - 29. Go to XFEED: L(R) RCS to R(L) RCS >>

~

Cont next page

OPCL/ALL/GEN M

If FWD RCS:

30. Return to normal config
31. (Aff) RCS He PRESS A,B – CL (tb-CL)
32. Cycle He PRESS A(B) to maintain PRPLT TK P 220-245

When He TK P < 456:

33. GNC 23 RCS
    Ovrd FWD MANFs STAT – CL
34. Perform LOSS OF VERNIERS (ORB OPS, RCS), then:

Prior to deorb:

35. Ovrd FWD MANFs STAT – OP

When PRPLT TK P < 190:

36. Go to RCS SECURE >>

√XFEED LINES

If aff RCS was feeding XFEED when leak occurred:

37. GNC 23 RCS
    RCS L – ITEM 2 EXEC

If XFEED P decr or zero:

38. L,R RCS He PRESS A(B) (two) – GPC (tb-OP)
    B(A) (two) – CL (tb-CL)
    TK ISOL (six) – OP (tb-OP)
    MANF ISOL (ten) – OP (tb-OP), GPC
39. Do not XFEED/I'CNCT >>

√RCS MANF ISOL 5

If leak not found above:

40. Reconfig sys as reqd
41. (Aff) RCS MANF ISOL 5 – CL
    – GPC (tb-CL)
42. Perform LOSS OF VERNIERS (ORB OPS, RCS), then:
43. Go to MAL, RCS, 10.1a 75

MAIN PROPULSION SYSTEM

MPS C/W

MPS PNEU He ISOL – OP
FILL/DRAIN LH2 OUTBD – OP
INBD – OP
LO2 OUTBD – OP
INBD – OP
√MCC

LOSS OF 2 CAB FANS 10-2
2 H2O LOOPS 10-7
CAB PRESS..... 10-27
HI LOAD EVAP 10-33
1 FREON LOOP..... 10-35
1 FC..... 10-39
2nd FC ON-ORBIT (TIG < 4 hr)..... 10-41
(TIG > 4 hr)..... 10-45
2 FREON LOOPS 10-49
FES 10-69
AV BAY FIRE..... 10-73
1 10-73
2 10-77
3A..... 10-81

LOSS OF 2 CAB FANS

MS1,2 1. Perform MS PWRDN, 10-5, ASAP

NOTE

Normal CO2 removal and humidity control lost.
Wipe off any visible moisture with towel.

Cab press increase due to air heating may cause CAB PRESS RELIEF vlv cycling

C3 2. MSTR MADS PWR – OFF
3. Minimize ltg

FWD 4. All MDU PWR (nine) – OFF
C2 All IDP/CRTs (three) – OFF
F6/F8 √FLT CNTLR PWR (two) – OFF
If FLT CNTLR PWR not reqd:
O14,O15, O16:E 5. cb DDU L,R,AFT (six) – op
L1 6. CAB FAN A,B (two) – OFF
TEMP CNTLR – OFF
7. HUM SEP A,B (two) – OFF
8. Use one PGSC
W1-10 9. Install Window Shades or mnvr to tail Sun att
GNC 201 UNIV PTG
TGT ID – ITEM 8 +4 EXEC
BODY VECT – ITEM 14 +5 EXEC
P – ITEM 15 +1 8 4 EXEC
Y – ITEM 16 +0 EXEC
OM – blank (MCC-provided if reqd)
C3 DAP: A/AUTO/VERN
CRT START TRK – ITEM 19 EXEC (*)
10. Cycle MDUs. If ON at loss of cooling, turn OFF within 30 min. Allow 3 min OFF prior to each 1 min ON (30 min max ON time). Save two MDUs that interface with a single IDP for entry

Cont next page

NOTE

Don QDM for temp > 90 degF and discomfort. If cab temp > 95 degF and no evaporative cooling is sensed, don LES, check tabs, close visor, LES O2 – ON.

Inflate anti-g suit as needed for on-orbit circulatory support.

Begin drinking H2O (one 8-oz container every 15 min with a salt tablet in every other container) and continue through entry

11. Go to LOSS OF 2 CAB FANS (DEORB PREP, CONTINGENCY DELTAS) and perform at next PLS opportunity. Expedite NOMINAL DEORBIT PREP proc if time-to-TIG < 3.5 hr

This Page Intentionally Blank

MS PULLOUT PAGE

MS1 Perform PLB EQUIP PWRDN, 10-6
MS2 Perform MS PWRDN ASAP

MS PWRDN

	1.	Minimize ltg
O14:B	2.	cb MNA EVENT TIMER AFT – op
:C		SMOKE DETN L/R FLT DK – op
O15:B	3.	MNB OI H2O BYP LOOP 2 SNSR – op
		MSN TIMER AFT – op
O16:C	4.	MNC SMOKE DETN CAB – op
L4:J	5.	AC3 ΦA SIG CONDR HUM SEP – op
A6U	6.	ANNUN BUS SEL – OFF
A13	7.	OS AUD SPKR PWR – OFF

NOTE
Galley OVEN/RHS sw should be
OFF unless dispensing H2O

GALLEY	8.	OVEN/RHS – ON, as reqd
		H2O HTRS (two) – OFF
MA73C:G	9.	cb AC3 GALLEY FAN (three) – op
ML86B:B	10.	MNB GALLEY H2O HTR – op
	If CO2 RMVL SYS flown:	
MO51F	11.	CO2 RMVL SYS CNTLR 1(2) MODE – STBY (hold 3 sec)
	If RMS pwrd dn:	
A3	12.	MON 1,2 PWR (two) – OFF
A7U	13.	TV PWR CNTL – PNL
		CONTR UNIT – OFF
	14.	VID OUT MON1,MON2 pb (two) – push (MON1,MON2 lt on)
O19	15.	TV PWR – OFF
R12L	16.	VTR PWR – OFF
MO58F	17.	TV PWR – OFF
	If not reqd:	
R11L	18.	IDP/CRT4 PWR – OFF
		CRT4,AFD1 MDU PWR – OFF
A6U	19.	FLT CNTLR PWR – OFF

PLB EQUIP PWRDN

1. Perform PL SAFING, then:

CAUTION
If stow prob occurs with either RMS and/or KU-BD ANT, perform aff sys QUICK RESPONSE JETTISON (CONT DEORB)

If RMS grappled to OBSS:

2. Perform OBSS JETTISON (PDRS OPS FS, OBSS CONTINGENCY), then:

If RMS-only:

3. Perform RMS PWRDN (PDRS OPS), then:

If KU-BD ANT deployed:

4. Perform KU-BD ANT STOW (ORB OPS, COMM/INST), then:

If radiators deployed:

5. Go to RAD STOW (ORB OPS, ECLS)

LOSS OF 2 H2O LOOPS

NOTES

- THIS PROCEDURE IS TIME CRITICAL
- Proc requires > 45 min, but time critical steps should be done ASAP
- Loss of H2O cooling aff both water and air cooled equipment
- Proc pwrs dn all comm. If comm reqd, preferred comm config in order of heat production:
  1. UHF only
  2. SGLS/STDN LO PWR if reqd
  3. TDRS only if mandatory (10 min max)
- Call ground at every avail UHF site
- Tear out COMM pages from proc and use until touchdown
- Cab depress/repress cycles to 10.2 psia are used for cab temp and humidity control
- If docked to ISS, proc is to be worked simo with JOINT EXPEDITED UNDOCKING AND SEPARATION (SODF: JOINT OPS)
- When pwrdns complete, perform actions on 10-19 and 10-20 as time permits at crew discretion

1. Perform PART 1 of this pwrdn and, based on TIG, complete PART 2 or PART 3

Cont next page

LOSS OF 2 H2O LOOPS, PART 1 – INITIAL PWRDN

TIME CRITICAL PROCEDURES (execute simo)

1. Record MET of 2nd H2O Loop Fail
   __ __ __/__ __:__ __:__ __
2. Establish comm plan with MCC, determine best TIG opportunities, then have MS3 perform COMM PWRDN, 10-23, ASAP (S-Bd Pwr Amp may fail in 10 min with no cooling)
3. Have MS perform MS OVHD PNL PWRDN, 10-19, ASAP
4. Have second MS perform MCA CONFIG, 10-17, and PLB EQUIP PWRDN, 10-17, ASAP
5. If docked to ISS, have CDR perform JOINT EXPEDITED UNDOCKING AND SEPARATION (SODF: JOINT OPS)
6. Have PLT proceed with CDR AND PLT PWRDN, ASAP

DETERMINE MAXIMUM TIME TO TIG, NUMBER OF DEP/REP, FROM N2 QTY FROM SPEC 66. Sel best landing site and deorbit TIG from PGSC. Set Wristwatch Timer (A17) counting down to TIG.

TIG:	_____
TGTS:	
C1	_____
C2	_____
HT	_____
ΘT	_____

Enter TARGETS in LOSS OF 2 H2O LOOPS DEORBIT PREP/ENTRY (CONT DEORB, LOSS OF 2 H2O LOOPS D/O PREP)

IF TOTAL N2	NUMBER OF DEP/REP	SEL BEST TIG WITHIN
>160 LB	3	45M - 4H:00M
>120 LB	2	45M - 2H:50M

CDR AND PLT PWRDN

O14,O15, O16:F 7. √Pri RJD LOGIC,DRIVER (sixteen) – ON

DAP: ALT (proc results in loss of VERNs)

O16:F RJD MANF L5/F5/R5 DRIVER – OFF

C3 8. √MSTR MADS PWR – OFF

9. Minimize ltg

10. Use only one IDP with two MDUs, one PGSC

NOTE

Cycle MDUs. If ON at loss of cooling, turn OFF within 30 min. Allow 2 min OFF prior to each 1 min ON (30 min max ON time). Save two MDUs that interface with a single IDP for entry. IDPs do not require cycling

Cont next page **OV103,104**

F6,F8,A6 11. FLT CNTLR PWR (three) – OFF, use one as reqd
O7 12. √TACAN MODE sel (three) – OFF
O8 13. √RDR ALTM (two) – OFF
14. √MLS (three) – OFF
L1 15. √H2O PUMP LOOP 1,2 (two) – OFF
(leave ON if any loop running)
HUM SEP (two) – OFF
(leave HUM SEP A ON if any loop running)

If any loop running, minimize bypass:

16. H2O LOOP 1(2) BYP MODE – MAN
MAN – DECR (30 sec)

If H2O PUMP LOOP 1 A(B) ON, inform MS:

MA73C:A 17. √MCA LOGIC MNA FWD 1 – ON
(MNB FWD 2 – ON)
L1 18. CAB FAN (two) – OFF
TEMP CNTLR – OFF
19. √FLOW PROP VLV LOOP tb (two) – ICH
20. FREON PUMP LOOP 1 – OFF
√2 – B
21. HI LOAD DUCT HTR sel – A/B
√TOP EVAP HTR NOZ L,R (two) – B AUTO(A AUTO)
√DUCT sel – B(A)
L2 22. O2 SYS 1 SPLY – CL (tb-CL)
L4:J 23. cb AC3 ΦA SIG CONDR HUM SEP – op

If not currently single G2, reassign strings to GPC 1 in MC 2:

24. GNC 0 GPC MEMORY
CONFIG – ITEM 1 +2 EXEC
Modify MC 2 per table – – – – ►

CONFIG GPC		2 10000
STR	1	1
	2	1
	3	1
	4	1
PL	1/2	0
CRT	1	1
	2	1
	3	0
	4	1
L	1	0
	2	0
MM	1	1
	2	1

CRT 25. GNC, OPS 201 PRO
O6 26. GPC MODE 2 – STBY
(tb-bp)
– HALT
– STBY
(tb-RUN)
– HALT
(tb-bp)
27. √GPC MODE 3,5 (two) – HALT
√OUTPUT 5 – NORM
L1 28. AV BAY 1 FAN A – ON
B – OFF
2,3 FAN A,B (four) – OFF
29. IMU FAN A – ON
B – OFF
√C – OFF

For any fwd IDP/CRT that is OFF:

30. GPC/CRT1/X EXEC
R2 31. HYD CIRC PUMP (three) – ON

Cont next page

C3 32. C/W MODE – ACK

NOTE
For F7 lights, hold in F2 or F4 MA

If current time to TIG < 50 min:
33. Go to LOSS OF 2 H2O LOOPS, PART 2 – SHORT ON-ORBIT WAIT, next page >>

L1 34. Cycle CAB FAN A(B) – ON (7 min)/OFF (1 hr) (to control PPCO2)
L4:P 35. cb AC2,3 ΦA LG SNSR (two) – op

WARNING
Do not unpwr all IMU/FF MDM's pairs

If IMU 2 in OPER:
36. GNC 21 IMU ALIGN
IMU 1,3 (two) – desel
O14,O16:A 37. IMU 1,3 (two) – OFF
If IMU 2 in STBY:
38. GNC 21 IMU ALIGN
IMU 2,3 (two) – desel
O15,O16:A 39. IMU 2,3 (two) – OFF
O6 40. MDM FF3,FF4 (two) – OFF
41. Verify MS OVHD PWRDN complete

NOTE
Both MMUs are OFF. If a ROLL-IN DISPLAY is reqd: turn MMU 1 ON, try transaction, turn MMU 1 OFF again

If time from failure to TIG < 2 hr 30 min:
42. Go to LOSS OF 2 H2O LOOPS, PART 2 – SHORT ON-ORBIT WAIT, next page >>
If time from failure to TIG > 2 hr 30 min:
43. Go to LOSS OF 2 H2O LOOPS, PART 3 – EXTENDED ON-ORBIT WAIT, 10-13

LOSS OF 2 H2O LOOPS, PART 2 – SHORT ON-ORBIT WAIT

If Undocking from ISS, delay step 1 until after Undocking and Post Final Sep, but continue with steps 2 through 19 of PART 2 – SHORT ON-ORBIT WAIT:

1. Perform POST UNDOCKING AND FINAL SEP RECONFIG, 10-15

BYPASS RADS/FES ACT

ML86B:A 2. cb MNC SPLY H2O XOVR VLV – cl

R11L 3. SPLY H2O XOVR VLV – OP (tb-OP)
√TKA OUTLET – CL (tb-CL)

L1 4. FLASH EVAP CNTLR (three) – OFF

5. HI LOAD EVAP – ENA
RAD BYP VLV MODE 1,2 (two) – MAN
MAN SEL 1,2 (two) – BYP,
wait 3 sec (tb-BYP)
CNTLR LOOP 1,2 (two) – OFF

When EVAP OUT T > 65:

6. FLASH EVAP CNTLR PRI A(B) – ON
7. Wait 1 min, verify EVAP OUT T = 39 degF
8. Give MS GO to perform PLBD CLOSURE, 10-18

If current time to TIG < 50 min, at TIG-30 min:

9. Go to LOSS OF 2 H2O LOOPS DEORBIT PREP/ENTRY (CONT DEORB, LOSS OF 2 H2O LOOPS D/O PREP) >>

NOTE

Limit operation of each GPC (1 hr max ON time from second H2O Loop failure)

If reqd, perform steps 10 thru 13:

O6 10. GPC MODE 2 – STBY (tb-RUN), hands off 10 sec
– RUN (OUTPUT tb-gray), hands off 10 sec

IDPX 11. In MCX add GPC 2 to tgt set (leave GPC 1 in tgt set)
Assign all strings to GPC2
(if SM GPC active, √PL 1/2 not assigned)
GNC, OPS X01 PRO
√All IDPs deassigned from GPC1

O6 12. GPC MODE 1 – STBY (tb-bp)
– HALT
– STBY (tb-RUN)
– HALT (tb-bp)

L1 13. AV BAY 1 FAN A(B) – OFF
2 FAN A(B) – ON

Wherever GPC 1 is referenced, replace with GPC 2 in the LOSS OF 2 H2O LOOPS DEORBIT PREP/ENTRY (CONT DEORB, LOSS OF 2 H2O LOOPS D/O PREP)

Cont next page

SM GPC/PL MDM Deact – Delay SM GPC/PL MDM Deact (steps 14-21) until PLBD are closed. Then perform ASAP:

14. SM 1 DPS UTILITY
    UL CNTL ENA – ITEM 36 EXEC
C3 15. UPLK – GPC BLK
C2 16. IDP/CRT1,2,3 MAJ FUNC (three) – GNC
O6 17. GPC MODE 4 – STBY (tb-bp)
    – HALT
    PWR 4 – OFF
18. GNC 0 GPC MEMORY
    CONFIG – ITEM 1 +2 EXEC
19. Assign PL1/2 to GPC 1 in MC2
CRT 20. GNC, OPS 201 PRO
O6 21. MDM PL1,PL2 (two) – OFF

22. Perform first cab depress/repress cycle starting at approx 1 hr 15 min after the failure, the final cycle at TIG-20 min. Procs in the 20 MINUTE DE/REPRESS MS PULLOUT PAGE (CONT DEORB, LOSS OF 2 H2O LOOPS); use until last depress/repress is complete

NOTE

Possible cab air OVBD RLF due to loss of cab cooling.

Use Quick Don mask as needed to provide additional respirator cooling during periods of high cab temp and humidity. To determine health of crewmember, place temp strip (MED Kit) on forehead. If any crewmember temp greater than 99 degF and crew feels ill, begin cab depress/repress cycle ASAP

At TIG-30 min:

23. Go to LOSS OF 2 H2O LOOPS DEORBIT PREP/ENTRY (CONT DEORB, LOSS OF 2 H2O LOOPS D/O PREP) >>

LOSS OF 2 H2O LOOPS, PART 3 – EXTENDED ON-ORBIT WAIT

If Undocking from ISS, delay step 1 until after undocking and Post Final Sep, but continue with steps 2 thru 6:

1. Perform POST UNDOCKING AND FINAL SEP RECONFIG, 10-15

O6 2. √GPC MODE 2,3,5 (three) – HALT
3. PWR 2,3,5 (three) – OFF

When RMS PWRDN (PDRS OPS) complete, perform steps 4 thru 6 ASAP:

4. GPC MODE 4 – STBY (tb-bp), hands off 10 sec
– RUN (tb-RUN), hands off 10 sec
OUTPUT 4 – NORM (tb-gray)
5. GNC 0 GPC MEMORY
CONFIG – ITEM 1 +2 EXEC

Modify MC 2 per table – – – → GNC, OPS 201 PRO

CONFIG GPC		2 10040
STR	1	1
	2	1
	3	1
	4	1
PL	1/2	1
CRT	1	1
	2	1
	3	1
	4	0
L	1	0
	2	0
MM	1	1
	2	1

O6 6. GPC MODE 4 – STBY (tb-bp)
– HALT
– STBY (tb-RUN)
– HALT (tb-bp)
PWR 4 – OFF

Delay steps 7 thru 20 of PART 3 – EXTENDED ON-ORBIT WAIT, 10-14, until POST UNDOCKING AND FINAL SEP RECONFIG is complete (perform step 19 as reqd):

Cont next page **OV103,104**

Establish free drift:

F8 7. Verify att mnvr complete
ADI ATT – INRTL
C3 DAP: B/AUTO/PRI (wait 30 sec)
FREE
O6 8. MDM PL1,PL2 (two) – OFF
9. √Wrist watch set to MET

Pwr dn remaining GPC:

10. GNC, OPS 000 PRO
11. GPC MODE 1 – STBY (tb-bp)
– HALT
– STBY (tb-RUN)
– HALT (tb-bp)
12. GPC PWR 1 – OFF

FWD,AFT 13. All MDU PWR (eleven) – OFF
C2,R11L IDP/CRT PWR (four) – OFF
L1 14. AV BAY FAN (six) – OFF
O13:C 15. cb ESS 2CA MTU B – op
:E 3AB GPC STAT – op
O14:B 16. MNA MSN TIMER FWD – op
:C SMOKE DETN L/R FLT DK – op

W1-10 17. Install Window Shades
18. Check all pwrdns complete

19. Perform first cab depress/repress cycle starting at approx 1 hr 15 min after the failure, the second at TIG-1:15 and the final cycle at TIG-20 min. Procs in the 20 MINUTE DE/REPRESS MS PULLOUT PAGE (CONT DEORB, LOSS OF 2 H2O LOOPS); use until last depress/repress is complete

NOTE

Possible cab air OVBD RLF due to loss of cab cooling.

Use QDM as needed to provide additional respirator cooling during periods of high cab temp and humidity. To determine health of crewmember, place temp strip (MED Kit) on forehead of CDR and PLT

20. Go to LOSS OF 2 H2O LOOPS, ON-ORBIT WAIT (CONT DEORB, LOSS OF 2 H2O LOOPS)

POST UNDOCKING AND FINAL SEP RECONFIG

If Undocking with ISS and Final Sep complete or if not docked with ISS:

1. GNC 20 DAP CONFIG
   DAP A,B set to A1,B1 except:
   (A) ITEM 10 +1.0 0 EXEC
   ITEM 11 +3.0 0 EXEC
   ITEM 15 EXEC (TAIL)
   ITEM 16 EXEC (TAIL)
   (B) ITEM 30 +0.2 0 EXEC
   ITEM 31 +1.0 0 EXEC
   ITEM 35 EXEC (TAIL)
   ITEM 36 EXEC (TAIL)

   CAUTION
   DO NOT mnvr on PRCS until MS has completed RMS JETT or STOW

2. Mnvr to tail Sun att:
   GNC 201 UNIV PTG
   TGT ID – ITEM 8 +4 EXEC
   BODY VECT – ITEM 14 +5 EXEC
   P – ITEM 15 +2 2 5 EXEC
   Y – ITEM 16 +0 EXEC
   OM – blank (MCC-provided as reqd)
   DAP: A/AUTO/PRI
   START TRK – ITEM 19 EXEC (CUR-*)

   If IMU 2 in OPER:
   O6 3. MDM FF1 – OFF
   If IMU 2 in STBY:
   O6 4. MDM FF2 – OFF
   O14,O15, O16:F 5. RJDF LOGIC,DRIVER (eight) – OFF

   NOTE
   Expect FRCS jet(s) to false fail leak when OF DSC cbs are opened

   O14:B 6. cb MNA OI SIG CONDR OF 1/4 A – op
   O15:B 7. cb MNB OI SIG CONDR OF 1/4 B – op
   2/3 A – op
   O16:B 8. cb MNC OI SIG CONDR OF 2/3 B – op
   O16:E 9. DDU AFT – op

OV103,104

This Page Intentionally Blank

MCA CONFIG (Execute ASAP)

L1 If either H2O PUMP LOOP 1 A(B) – ON:

MA73C:A 1. Leave MCA LOGIC MNA FWD 1(MNB FWD 2) ON in next step

> CAUTION
> Coordinate steps 2 and 3 with CDR. FRCS is lost with step 2 and recovered with step 3

MA73C:A, B 2. MCA LOGIC MNA,B,C (fourteen) – OFF

3. GNC 23 RCS
   ITEM 1 EXEC (FRCS page)
   OVRD FRCS MANF(s) – OP

4. For PLB EQUIP PWRDN, use following MCA config:
   MCA LOGIC MNA MID 1,3 (two) – ON
   MNB MID 2,3,4 (three) – ON
   MNC MID 2,4 (two) – ON

> CAUTION
> Retain this MCA sw config until step 8 of the PLB EQUIP PWRDN. Disregard MCA sw throws in the PL SAFING, RAD STOW, KU-BD ANT STOW, and RMS PWRDN procs

MO13Q 5. √AIRLK FAN A,B (two) – OFF

PLB EQUIP PWRDN (Execute ASAP)

1. Perform PL SAFING, then:

> CAUTION
> If stow prob occurs with either RMS and/or KU-BD ANT, perform aff sys QUICK RESPONSE JETTISON (CONT DEORB)

2. If TV reqd for OBSS jettison or RMS/Ku stow, perform ACTIVATION and OPERATION (Auto Ops only) (Cue Card, TV)

If RMS grappled to OBSS:

3. Perform OBSS JETTISON (PDRS OPS FS, OBSS CONTINGENCY), then:

If RMS-only:

4. Perform RMS PWRDN (PDRS OPS), then:

Cont next page

If KU-BD ANT deployed:

5. Perform KU-BD ANT STOW (ORB OPS, COMM/INST), then:

If radiators deployed:

6. Perform RAD STOW (ORB OPS, ECLS), then:

7. Notify CDR: RMS stowed(jettisoned)

If performing PART 2 – SHORT ON-ORBIT WAIT:

8. Perform PLBD CLOSURE, below, on GO from CDR, then:

MA73C:A, B 9. MCA LOGIC MNA MID 1,3 (two) – OFF
MNB MID 2,3,4 (three) – OFF
MNC MID 2,4 (two) – OFF

PLBD CLOSURE (Short On-Orbit Wait only)

> WARNING
> Verify no obstructions before closing and latching PLBD (Ku ANT, RAD, RMS, etc)

1. Notify CDR: Beginning PLBD CLOSURE

O6 2. √MDM PL1,PL2 (two) – ON

3. SM I/O RESET

CRT4 4. SM, OPS 202 PRO – close PLBD ASAP

5. SM PL BAY DOORS

R13L PL BAY DR SYS (two) – ENA

CRT4 6. AC POWER ON – ITEM 1 EXEC
AUTO MODE SEL – ITEM 3 EXEC
PBD SW BYPASS – ITEM 14 EXEC
CLOSE – ITEM 17 EXEC

If 'PLB SEQ FAIL' msg during door closure and aft latches for
: that door are not 'CL':
: 7. Check door scallop on or below tgt line before
: continuing in MAN mode; otherwise:
: 8. Perform MAL, MECH SSR-2,
L CONTINGENCY PLBD CLOSURE, then:

After PLBD closed:

CRT4 9. PBD STOP – ITEM 16 EXEC
AC POWER OFF – ITEM 2 EXEC

R13L 10. PL BAY DR SYS (two) – DSBL
GPC/CRT 0/4 EXEC

R11L 11. IDP/CRT4 PWR – OFF

A7U 12. √PL BAY FLOOD (all) – OFF

If either H2O PUMP LOOP 1 A(B) – ON:

MA73C:A 13. Leave MCA LOGIC MNA FWD 1 (MNB FWD 2) – ON in next step

MA73C 14. MCA LOGIC MNA,B,C (fourteen) – OFF

15. Notify CDR: PLBDs closed

MS OVHD PNL PWRDN

1. Set wrist watches as accurately as possible to MET (set one to GMT). The MET may be used for deorbit burn execution. Record GMT day of year
   __ __ __/__ __:__ __:__ __
2. Minimize ltg on Aft Flt Deck

O13:A 3. cb ESS 1BC MTU A – op
:C 2CA C/W B – op

O14:A 4. √BRAKES MNA – OFF

:B 5. cb MNA OI H2O BYP LOOP 1 SNSR – op
EVENT TIMER AFT – op

:E √ADTA 1 – op
DDU L,AFT (two) – op

O15:A 6. √BRAKES MNB – OFF

:B 7. cb MNB OI H2O BYP LOOP 2 SNSR – op
MSN TIMER AFT – op
EVENT TIMER FWD – op

:E √ADTA 2 – op
DDU L,R (two) – op

:F 8. MMU 2 – OFF

O16:A 9. √BRAKES MNC – OFF

:E 10. √cb MNC ADTA 3,4 (two) – op
DDU R – op

When N2 QTY and TIG determined by CDR:

O14:B 11. cb MNA OI MDM OF 1/2 A,3/4 A (two) – op
O15:B MNB OI MDM OF 1/2 B – op
O16:B MNC OI MDM OF 3/4 B – op
O14:F MMU 1 – OFF

A13 12. GPS PWR – OFF

13. Notify CDR: MS OVHD PNL PWRDN complete
14. Assist other MS with completion of PLB EQUIP PWRDN, 10-17

When pwrdns complete, perform following at crew discretion:

FLUID LOADING PREP

GALLEY
1. OVEN/RHS – ON
2. Unstow, fill 4 water containers (per crewmember) with 8 oz of water each. Temp stow near seat
3. Unstow 8 salt tablets (per crewmember). Temp stow in Flt Suit pocket
4. OVEN/RHS – OFF
5. √H2O HTRS (two) – OFF
6. √OVEN FAN – OFF
7. Stow Personal Hygiene Hose

NOTE

Ensure sufficient containers and salt tablets are prepared to continue fluid loading thru entry

FLUID LOADING

1. Immed begin drinking H2O (one 8-oz container every 15 min with a salt tablet in every other container) and continue through entry

CLOTHING CONFIG

1. Don QDM for temp > 90 degF and discomfort

FDF CONFIG

1. Unstow: ENT, ENT PKT, Deorb Burn Cards, ENT Cue Cards

CAB CONFIG

1. Stow loose equipment, Backup PGSC
2. Remove and stow side hatch UV filter, locking device, and pyro box safing pin
3. Tape foot loops in egress routes
4. Remove and stow Window Shades (if not needed for cab T control)

WCS DEACT

WCS 1. Foot Restraints – up, locked
ML31C 2. √VAC VENT ISOL VLV CNTL – OP (tb-OP)
If EDO WCS:
WCS 3. URINAL SEL – OFF
4. WCS PWR SEL (two) – OFF1,OFF2
5. FAN PWR – AUTO

INSTALL SEATS

POLE SETUP

1. ESCAPE POLE SETUP:
Reinstall Stbd pip pin and Large Port pin
Retract and hold Locking Pin(Ring)
Reinstall Large pin
Release Locking Pin(Ring)
Slide forward Safing latch
Verify pole straps secure
2. Check minimum ltg on Middeck

This Page Intentionally Blank

NOTE
KEEP THIS PAGE UNTIL TOUCHDOWN

MS After comm plan established with MCC, perform COMM PWRDN ASAP (delay 10 min max)

CAUTION
Must complete steps 1 thru 3 within 10 min. TDRS or STDN – HI AOS is limited to 10 min or power amp will overheat

NOTE
Proc pwrs off ALL ground comm

COMM PWRDN

A1L 1. S-BD PM ANT SW ELEC – OFF
PRE AMP – OFF
PWR AMPL STBY – OFF
OPER – OFF
MODE sel – STDN LO
XPNDR – OFF

2. NSP PWR – OFF
ENCRYPTION PWR – OFF
(Encrypt OFF rest of flt)
MODE – SEL
SEL – BYP

NOTE
Verify CDR ready for COMM PWRDN prior to performing step 3

C3 3. S-BD PM CNTL – PNL

NOTE
Ensure CDR has recorded N2 quantities before powering down PCMMU. Other steps may be performed

4. OI PCMMU PWR – OFF
FORMAT – FXD

5. AUD CTR – OFF (turn ON as reqd for ICOM audio)

NOTE

KEEP THIS PAGE UNTIL TOUCHDOWN

O5	6.	L AUD PWR – OFF (turn ON as reqd for ICOM audio)
O6	7.	UHF MODE sel – OFF
O9	8.	R AUD PWR – OFF (turn ON as reqd for ICOM audio)
A1L	9.	√S-BD PL CNTL – PNL
		√PWR SYS – OFF
	10.	PL DATA INTLVR PWR – OFF
A1R	11.	S-BD FM CNTL – PNL
		PWR – OFF
A3	12.	MON 1,2 PWR (two) – OFF
A7U	13.	TV PWR CONTR UNIT – OFF
R14:B	14.	cb MNA,MNC GCILC (two) – op
:D		TV (fourteen) – op
		MNB VPU – op
:E		CAMR (six) – op
L9,R10	15.	PS,MS AUD PWR (two) – OFF
A13	16.	OS AUD SPKR PWR – OFF
MO42F	17.	MIDDECK SPKR AUD SPKR PWR – OFF
	18.	Call ground at every avail UHF site per COMM POWERUP, 10-25; voice down cab temp, crew body temps, heart rates, and words to indicate severity of cab humidity

If MCC request data on cab environ or Av bays:

19. Perform CABIN ENVIRONMENT MONITOR (CONT DEORB, LOSS OF 2 H2O LOOPS), then:

If after TIG-10 min:

20. Perform AFT PNL CONFIG FOR ENTRY COMM (CONT DEORB, LOSS OF 2 H2O LOOPS D/O PREP)

NOTE
KEEP THIS PAGE UNTIL TOUCHDOWN

COMM POWERUP (If comm reqd prior to landing site coverage)

```
            Pwr up audio sys:
C3              1.    AUD CTR – 1
O5                    L AUD PWR – AUD
O9                    R AUD PWR – AUD
            If UHF avail, config for UHF comm (voice only):
O6          |   2.    UHF MODE sel – SPLX
            |             √SPLX/EVA PWR AMPL – ON
            |   3.    After comm with MCC complete:  Go to COMM
            |         PWRDN, steps 5 thru 8, 10-23  >>
            If UHF site unavail or if MCC requests data
            |  (config for GSTDN(SGLS) S-BD):
C3          |   4.   √S-BD PM CNTL – PNL
A1L         |                ANT SW ELEC – 2
            |                MODE sel – STDN LO(SGLS)
            |                XPNDR – 2
            |   5.    NSP PWR – 2
            |             √DATA RATE XMIT – HI
            |                        √RCV – HI
            |           CODING XMIT – OFF
            |                     RCV – OFF
            |             √UPLK DATA – S-BD
C3/F9       |   6.    Sel best S-BD PM ANT
            |   If MCC requests data:
O15:B       |   :   7.    cb MNB OI SIG CONDR OF 1/4 B,2/3 A
            |   :                                   (two) – cl
O14:B       |   :   8.    cb MNA OI MDM OF 1/2 A,3/4 A (two) – cl
C3          |   :   9.    OI PCMMU PWR – 1
O6          |   :   10.   MDM PL2 – ON
            |   :   11.   BFS, GNC I/O RESET
            |   :   At end of data transmission:
O14:B       |   :       12.   cb MNA OI MDM OF 1/2 A,3/4 A (two) – op
O15:B       |   :       13.   cb MNB OI SIG CONDR OF 1/4 B,2/3 A
            |   :                                       (two) – op
            |   :       If not reqd for PLBD CLOSURE:
O6          |   :           14.   MDM PL2 – OFF
            |   :   After comm/data complete:
            |   L       15.   Go to COMM PWRDN, 10-23  >>
            ~
```

Cont next page

NOTE
KEEP THIS PAGE UNTIL TOUCHDOWN

~
|
If UHF site and GSTDN unavail and comm/data critical:
Config for TDRS S-BD during AOS

CAUTION
This is a High Power Mode. On-time should be limited to 10 min max due to Pwr Amp Thermal constraints. A 3-min delay occurs before Pwr Amp comes on. Uplink not aff. Proceed with sel of best S-BD PM ANT

C3 16. √S-BD PM CNTL – PNL
A1L ANT SW ELEC – 2
PRE AMP – 2
PWR AMPL OPER – 2
MODE sel – TDRS DATA
XPNDR – 2
17. NSP PWR – 2
√DATA RATE XMIT – HI
√RCV – HI
CODING XMIT – ON
RCV – ON
√UPLK DATA – S-BD
C3/F9 18. Sel best S-BD PM ANT
If MCC requests data:
O15:B : 19. cb MNB OI SIG CONDR OF 1/4 B,2/3 A
: (two) – cl
O14:B : 20. cb MNA OI MDM OF 1/2 A,3/4 A (two) – cl
C3 : 21. OI PCMMU PWR – 1
O6 : 22. MDM PL2 – ON
: 23. BFS, GNC I/O RESET
: At end of data transmission:
O15:B : 24. cb MNB OI SIG CONDR OF 1/4 B,2/3 A
: (two) – op
O14:B : 25. cb MNA OI MDM OF 1/2 A,3/4 A (two) – op
: If not reqd for PLBD CLOSURE:
O6 L 26. MDM PL2 – OFF
After comm/data complete:
27. Go to COMM PWRDN, 10-23

LOSS OF CAB PRESS

CDR — Perform JOINT EXPEDITED UNDOCKING AND SEPARATION (SODF: JOINT OPS)
MS1,MS2 — Perform procs on 10-30
PLT — Perform following pwrdn

NOTE

Cab press will stabilize at 8 psia for following EQ dP/dT values:
< 0.6 for Orbiter + Airlock
< 0.4 for Orbiter + Airlock + Spacehab.

If docked to ISS, undocking will be performed with Single G2 (i.e., no +Z redundancy)

C3
1. MSTR MADS PWR – OFF
2. Minimize ltg
3. Use one IDP/CRT with two MDUs, as reqd (IDP4 preferable)
4. Use one PGSC, FLT CNTLR PWR as reqd

If FLT CNTLR PWR not reqd:

O14,O15, O16:E
5. cb DDU L,R,AFT (six) – op

O7
6. √TACAN MODE sel (three) – OFF

O8
7. √MLS (three) – OFF
√RDR ALTM (two) – OFF

L1
8. CAB TEMP CNTLR – OFF
9. HUM SEP (two) – OFF
10. H2O LOOP 2(1) BYP MODE – MAN
MAN – DECR (30 sec)
11. √FLOW PROP VLV LOOP tb (two) – ICH

If FES not ena:
: If EVAP OUT T 41 to 47 degF:
: | 12. RAD CNTLR OUT TEMP – HI
: | When EVAP OUT T > 50 degF:
: | 13. FLASH EVAP CNTLR PRI A(B) – ON, then immed:
: | 14. RAD CNTLR OUT TEMP – NORM
: If EVAP OUT T < 41 or > 47 degF:
L 15. FLASH EVAP CNTLR PRI A(B) – ON

L2
16. √ANTISKID – OFF
√NWS – OFF

L4:L
17. cb ΦA CAB T CNTLR 1,2 (two) – op

Cont next page

If orbit 2,3 deorbit due to cab leak:

18. Use DEORB PREP/ENTRY DELTAS PULLOUT PAGE, 10-31, then go to LAUNCH DAY DEORBIT PREP (ORBIT 2(3)) (CONT DEORB, LAUNCH DAY ORBIT 2(3)) >>

If orbit 3 deorbit due to fire, tox spill, or glass in cabin:

19. Go to LAUNCH DAY DEORBIT PREP (ORBIT 3) (CONT DEORB, LAUNCH DAY ORBIT 3) >>

W1-10 20. Install Window Shades (ten) or mnvr to tail Sun att:

GNC UNIV PTG

	TGT ID	– ITEM 8 +4 EXEC
	BODY VECT	– ITEM 14 +5 EXEC
	P	– ITEM 15 +1 8 4 EXEC
	Y	– ITEM 16 +0 EXEC
	OM	– blank (MCC-provided if reqd)
C3	DAP: A/AUTO/VERN	
CRT	START TRK – ITEM 19 EXEC	

If time to TIG < 4 hr:

21. Go to 8 PSI DEORBIT PREP (DEORB PREP, CONTINGENCY DELTAS) >>

If time to TIG > 4 hr:

If currently in single G2 GPC OPS:

22. Perform G2 SET EXPANSION, target Dual G2 (ORB OPS, DPS), then:

Cont next page

REASSIGN STRINGS TO GPC 2 IN MC 2

NOTE

If Av Bay 2 fire and TIG > 4 hr:
Reassign strings to GPC in unaffected Av Bay

23. GNC 0 GPC MEMORY
    CONFIG – ITEM 1 +2 EXEC
    Modify MC 2 per table – – – – →
    DOWNLIST GPC –
    ITEM 44 +2 EXEC

CRT 24. GNC, OPS 201 PRO

O6 25. GPC MODE 1(3) – STBY
– HALT
– STBY
(tb-RUN)
– HALT
(tb-bp)
PWR 1(3) – OFF
√MODE 3,5 (two) –
HALT (tb-bp)

CONFIG GPC		2 02000
STR	1	2
	2	2
	3	2
	4	2
PL	1/2	0
CRT	1	2
	2	2
	3	0
	4	2
L	1	0
	2	0
MM	1	2
	2	2

26. Go to 8 PSI DEORBIT PREP (DEORB PREP, CONTINGENCY DELTAS)

MS PWRDN

CDR,MS1 Perform PLB EQUIP PWRDN (below)
MS2 Perform remaining pwrdn

O14,O15, O16:E 1. cb ADTA (four) – op
O16:E 2. cb MNC RCS/OMS PRPLT QTY GAUGE – op
If TIG > 2 hr 40 min:
O14:B 3. cb MNA EVENT TIMER AFT – op
O15:B 4. MNB MSN TIMER AFT – op
A7U 5. TV PWR CNTL – PNL
CONTR UNIT – OFF
A13 6. OS AUD SPKR PWR – OFF
L9 7. PS AUD PWR – OFF
MO42F 8. MIDDECK SPKR AUD SPKR PWR – OFF
MO58F 9. TV PWR – OFF
When RMS pwrd dn:
A3 10. MON PWR (two) – OFF
R14:E 11. cb CAMR (six) – op
MD44F 12. Cab temp cntl act link – pin to FULL COOL, stow linkage >>

PLB EQUIP PWRDN

13. If orbit 2,3 deorbit >>
14. Perform PL SAFING, then:

CAUTION
If stow prob occurs with either RMS and/or KU-BD ANT, perform aff sys QUICK RESPONSE JETTISON (CONT DEORB)

If RMS grappled to OBSS:
15. Perform OBSS JETTISON (PDRS OPS FS, OBSS CONTINGENCY), then:
If RMS-only:
16. Perform RMS PWRDN (PDRS OPS), then:
If KU-BD ANT deployed:
17. Perform KU-BD ANT STOW (ORB OPS, COMM/INST), then:
If radiators deployed:
18. Go to RAD STOW (ORB OPS, ECLS)

NOTE

Incorporate following changes or remove this page for use with the indicated checklist or cue card.

Single fault tolerance used for most cab air-cooled equipment. Add'l LRUs may be activated if reqd and if CAB PRESS stable ≥ 8 psia

A. Deltas to the LAUNCH DAY ORBIT 2(3) (CONT DEORB)
   1. Minimize use of IDPs, MDUs, FLT CNTLR PWR, DDUs. Use one PGSC

   If rev 2:
   2. APU HTRS & DED DISP ENT CONFIG [3]
      Do not pwr TACANs

   If rev 3:
   3. ENT FWD FLT DECK CONFIG [10]
      Do not pwr MLS,TACANs
   4. In ENT SW LIST/VER, do not activate pwrdn items

B. Deltas to DEORBIT BURN (ENT)
   At TIG-4:
   1. Use two IDP/CRTs with four MDUs as reqd for deorbit burn
   2. cb DDU L,R (four) – cl (O14,O15, O16:E)
   3. L,R FLT CNTLR PWR (two) – ON (F6,F8)

C. Deltas to POST BURN (ENT)
   1. Use one IDP/CRT with two MDUs as reqd
   2. L,R FLT CNTLR PWR (two) – OFF (F6,F8)
   3. cb DDU L,R,AFT (six) – op (O14,O15, O16:E)
   4. Delete ANTISKID, NWS callouts (ENTRY SW CHECK)

Cont next page

D. Deltas to ENTRY MANEUVERS (Cue Card)

At EI:

1. Use two IDP/CRTs with four MDUs as reqd
2. O14,O15, O16:E — cb DDU L,R (four) – cl
3. F6,F8 — L,R FLT CNTLR PWR (two) – ON
4. O14,O15, O16:E — cb ADTA 1,2,3 (three) – cl
5. BFS, GNC I/O RESET

At V = 15K:

If CAB P < 8 psia:

6. Delete NAVAIDS callout

If CAB P ≥ 8 psia:

7. Activate all TACANs, RAs, MLSs
   GNC I/O RESET
   At M < 1.0, go to step 11

At V = 10K:

8. O7 — TACAN 2,3 MODE sel (two) – GPC

At M = 2.7:

9. Use two HUDs, MLSs, and RAs as reqd
10. GNC I/O RESET

At M < 1.0:

11. L2 — ANTISKID – ON
12. NWS – 1

LOSS OF HI LOAD EVAP

NOTE

MAL, ECLS SSR-2, FES CORE FLUSH PROCEDURE should be performed if core icing is suspected. If unsuccessful, perform pwrdn prior to RAD BYPASS at TIG-2:50 during deorb prep. If already in deorb prep, perform pwrdn and review activities already performed for changes

C3 1. √MSTR MADS PWR – OFF
2. Minimize ltg
3. Use one IDP/CRT with two MDUs, one FLT CNTLR PWR, and one PGSC as reqd
4. Perform PL PWRDN, then:
O7 5. √TACAN MODE sel (three) – OFF
O8 6. √RDR ALTM (two) – OFF
7. √MLS (three) – OFF
L1 8. √FLOW PROP VLV LOOP tb (two) – ICH
9. √HI LOAD DUCT HTR sel – OFF
A3 10. TV MON (two) – OFF

If FLT CNTLR PWR not reqd:

O14,O15, O16:E 11. cb DDU L,R,AFT (six) – op

12. Reset EVAP OUT T C&W upper limit (ch 107,117) to 2.15V (70 degF). Change B/U C&W parameter, 0631207, 0631407 upper limit to 70

A. Deltas to NOMINAL DEORBIT PREP (DEORB PREP) if not already performed

At TIG-03:00, prior to RAD BYP:

L1 1. H2O LOOP 2(1) BYP MODE – MAN
MAN – DECR (hold 30 sec)
FLASH EVAP CNTLR PRI A – OFF
B – OFF
SEC – ON
√HI LOAD EVAP – OFF
Perform RAD BYPASS/FES C/O (ORB OPS, ECLS):
Delete steps 3 and 5 thru 8 (SEC FES C/O)

At TIG-03:15 in DED DISP ENT CONFIG:

2. Do not pwr NAV/LDG AIDS, ADTAs
Pwr DDUs, MDUs only as reqd

Cont next page

At TIG-01:50, ENT SWITCH LIST/VERIF:

3. Do not pwr NAVAIDS, ADTAs
   Delete BRAKE/ANTISKID ACT
4. Go to LOSS OF HI LOAD EVAP DEORB OR ENTRY PULLOUT PAGE (ENT PKT, PWRDN)

B. Deltas to DEORBIT BURN (ENT)

At TIG-10:

O14,O15, O16:E
1. cb DDU L,R (four) – cl
2. Use two IDP/CRTs with four MDUs, and two FLT CNTLR PWR for burn

At TIG-5:

L1
3. TOP EVAP HTR NOZ (two) – OFF
   DUCT sel – OFF

C. Deltas to POST BURN (ENT)

F6,F8
1. L,R FLT CNTLR PWR (two) – OFF

O14,O15, O16:E
2. cb DDU L,R (four) – op (save for entry)
3. Use one IDP/CRT with two MDUs
4. Delete ANTISKID, NWS callouts (ENTRY SW CHECK)

D. Deltas to ENTRY MANEUVERS (Cue Card)

At EI:

O14,O15, O16:E
1. cb DDU L,R (four) – cl

F6
2. L FLT CNTLR PWR – ON
3. Use two IDP/CRTs with four MDUs

O14,O15, O16:A
4. BRAKES (three) – ON

O14,O15, O16:E
5. cb ADTA 1,2,3 (three) – cl
6. GNC I/O RESET

L2
7. NWS – 1
8. ANTISKID – ON

At V = 15K:

9. Delete NAVAIDS callout

O7
10. TACAN 2,3 MODE sel (two) – GPC

At M = 2.7:

11. Use two HUDs, MLSs, and RAs
12. GNC I/O RESET

LOSS OF 1 FREON LOOP

MS Perform MS PWRDN, 10-36

C3
1. MSTR MADS PWR – OFF
2. Minimize ltg
3. Use one IDP/CRT with two MDUs as reqd, and one PGSC

If FLT CNTLR PWR not reqd:

O14,O15, O16:E
4. cb DDU L,R,AFT (six) – op
5. If reqd, perform PL PWRDN, then:

L1
6. √FLOW PROP VLV LOOP tb (two) – ICH
7. H2O LOOP 2(1) BYP MODE – MAN
   MAN – DECR (hold 30 sec)

SM SYS SUMM 2

If EVAP OUT T not ~39 degF and stable:

8. Perform TOPPING FES STARTUP (ORB OPS, ECLS), then:

If prior to deorb prep:

If dual or triple G2:

9. Perform G2 SET CONTRACTION (ORB OPS, DPS) to single G2, then:

O15:F
10. MMU 2 – OFF

W1-10
11. Mnvr to shade windows from sun or install Window Shades

SM SYS SUMM 1

12. Check kW; if >14 kW: Perform PRIOR PWRDN (numbered) (except FES and one PGSC) until ≤ 14 kW, then:
13. Use UNDOCKING/DEORB/ENTRY DELTAS PULLOUT PAGE, 10-37, for changes to UNDOCKING/DEORB PREP and ENT >>

If in deorb prep:

F6,F8
14. √FLT CNTLR PWR (two) – OFF
15. Use one IDP/CRT with two MDUs, as reqd

O7
16. TACAN MODE sel (three) – OFF

O8
17. RDR ALTM (two) – OFF
18. MLS (three) – OFF

L2
19. ANTISKID – OFF
    NWS – OFF
20. Continue with DEORB PREP; use UNDOCKING/DEORB/ENTRY DELTAS PULLOUT PAGE, 10-37, for changes

MS PWRDN

	1.	Minimize ltg on Aft Flt Deck and Middeck
R14:D	2.	cb TV (fifteen) – op
:E	3.	CAMR (six) – op
A3	4.	MON 1,2 PWR (two) – OFF
	If CO2 RMVL SYS flown:	
MO51F	5.	CO2 RMVL SYS CNTLR 1(2) MODE – STBY (hold 3 sec)
	6.	Remove current cans, install two fresh LiOH cans
	If in deorb prep:	
O14,O15, O16:A	7.	BRAKES (three) – OFF
O14,O15, O16:E	8.	cb ADTA (four) – op

NOTE

KEEP THIS PAGE UNTIL TOUCHDOWN.

Incorporate following changes or remove these pages for use with the indicated checklist or cue card.

Undocking from ISS will be performed with Single G2 (i.e., no +Z redundancy)

Perform NOMINAL DEORBIT PREP (DEORB PREP) with the following contingency deltas to the procedure

A. Deltas to DEORB PREP
   1. Use one FLT CNTLR PWR, DDU, PGSC, and one IDP/CRT with two MDUs, as reqd
   2. Minimize ltg
   3. Minimize sun in cab if possible

   If rev 3 deorb, deltas to LAUNCH DAY ORBIT 3 (CONT DEORB):
   4. ENT FWD FLT DECK CONFIG 10
      Do not pwr MLS,TACANs

   If nominal deorb prep:
   Deltas to NOMINAL DEORBIT PREP (DEORB PREP):
   5. Verify steps 14 thru 20, 10-35, MS, steps 7,8, 10-36
   6. DED DISP ENT CONFIG 6
      Do not pwr ADTAs,TACANs
      Add: Pwr NAV/LDG AIDS per ENTRY MANEUVERS (Cue Card)
      Minimize MDU use
   7. ENT SWITCH LIST/VERIF
      Do not pwr LRUs previously pwrd dn

B. Deltas to DEORBIT BURN (ENT)
   1. Maintain window shading att until TIG-15

   At TIG-15:
   2. Remove Window Shades if installed

   At TIG-10:
O14,O15,O16:E 3. cb DDU L,R (four) – cl
   4. Use two IDP/CRTs with four MDUs, two FLT CNTLR PWR for burn

Cont next page

C. Deltas to POST BURN (ENT)

F6,F8 1. L,R FLT CNTLR PWR (two) – OFF

O14,O15, O16:E 2. cb DDU L,R (four) – op

3. Use one IDP/CRT with two MDUs

4. Delete ANTISKID, NWS callouts (ENTRY SW CHECK)

D. Deltas to ENTRY MANEUVERS (Cue Card)

At EI:

O14,O15, O16:E 1. cb DDU L,R (four) – cl

F6 2. L FLT CNTLR PWR – ON

3. Use two IDP/CRTs with four MDUs

O14,O15, O16:A 4. BRAKES (three) – ON

O14,O15, O16:E cb ADTA 1,2,3 (three) – cl

GNC I/O RESET

L2 ANTISKID – ON

NWS – 1

At V = 15K:

5. Delete NAVAIDS callout

O7 TACAN MODE sel (two) – GPC

At V = 12K:

6. Perform RAD FLOW in unfailed loop

At M = 2.7:

7. Use two HUDs, MLSs, and RAs

GNC I/O RESET

E. Deltas to POST LDG (ENT)

If EVAP OUT T high and incr, go to EMER PWRDN (Cue Card)

F. Deltas to EVAP OUT TEMP HIGH (Cue Card)

If EVAP OUT T HIGH and V > 12K:

Establish RAD FLOW in unaff loop:

L1 1. RAD BYP VLV MODE 1(2) – AUTO

CNTLR LOOP 1(2) – AUTO A(B)

2. Perform EVAP OUT T HIGH (Rads Coldsoaked), steps 2 thru 4

If EVAP OUT T HIGH and V < 12K:

If loop 1(2) lost:

L1 3. NH3 CNTLR B(A) – PRI/GPC

LOSS OF 1 FC

If before deorb prep:

L1 1. √CAB FAN A(B) – ON

If total Orb kW > 18:

2. Perform PRIOR PWRDN, GROUP 1,2 (except FES), then:

3. Perform PL PWRDN

If FC 1 or 2 failed:

R1 4. √MN BUS TIE A,B (two) – ON
√C – OFF

If FC 3 failed:

5. PL PRI MNB – ON
MNC – OFF
FC3 – OFF

6. √MN BUS TIE C,A (two) – ON
√B – OFF

If any FC AMPS > 330 or ΔAMPS > 100:

7. Perform MAL, EPS SSR-8, BUS LOADING – LRU SELECT, then:

8. Go to step 18

If in deorb prep:

9. Minimize ltg

10. Use only one DDU, and FLT CNTLR PWR as reqd. One IDP/CRT off as reqd

O7 11. TACAN MODE sel (three) – OFF

O8 12. RDR ALTM (two) – OFF

13. MLS (three) – OFF

L1 14. √CAB FAN A(B) – ON

R14:D 15. cb TV (fifteen) – op
:E CAMR (six) – op

A3 16. MON 1,2 PWR (two) – OFF

A11 17. CRYO TK HTR (four) – OFF

If FC recoverable:

18. Go to MAL, EPS SSR-3, FC SHUTDN C&W LIMIT CHANGE >>

If FC unrecoverable:

19. Make FDF Delta changes as given (next page), then as time permits reconfig C/W limits per MAL, EPS SSR-3, FC SHUTDN C&W LIMIT CHANGE

Cont next page

FDF changes:

A. Deltas to DEORBIT BURN (ENT)
TIG-5:
L1 1. TOP EVAP HTR NOZ (two) – OFF
DUCT sel – OFF
HI LOAD DUCT HTR sel – OFF
HUM SEP (two) – OFF
L2 FLASH EVAP FDLN HTR SPLY (two) – OFF

B. Deltas to EPS procs in this book
1. FC REACTANT VLV CLOSED: Delete step 6;
Change step 2 to read:
If aff FC/MN bus tied and COOL P > 40:
2. MN BUS TIE (three) – ON (ASAP)
(Aff) MN BUS TIE (one) – OFF (ASAP)
2. FC COOL P: Delete step 1
3. BUS TIE, steps 1,7: Delete '(A to...A)'
4. FC1(2,3) H2 PUMP ↑↓: Replace step 3 with:
If aff FC/MN bus tied:
3. MN BUS TIE (three) – ON
(Aff) MN BUS TIE (one) – OFF
5. FC SAFING: Replace steps 7,8 with:
If aff FC/MN bus tied:
7. MN BUS TIE (three) – ON
8. (Aff) MN BUS TIE (one) – OFF
6. FC H2O RLF NOZ TEMP ↑↓: Replace step 3 with:
If aff FC/MN bus tied:
3. MN BUS TIE (three) – ON
(Aff) MN BUS TIE (one) – OFF
7. FC DELTA V 1(2,3):
Delete step 1
Add 'MN BUS TIE (three) – ON, then:' to beginning of step 4

C. Deltas to EPS (ENT PKT)
1. Perform LOSS OF 1 FC, part B, steps 1 thru 8 (ENT PKT, PWRDN), then:
If in deorb prep:
2. Go/return to NOMINAL DEORBIT PREP (DEORB PREP) >>

D. Deltas to FLIGHT PLAN at 10 min prior to 'Go to DEORB PREP', add: 'perform LOSS OF 1 FC, steps 9 thru 17 (ORB PKT, PWRDN)'

LOSS OF 2nd FC ON-ORBIT (TIG < 4 hr)

If Rev 2,3 deorbit:

1. Go to LOSS OF 2nd FC (ASC PKT, PWRDN) >>

2. If TIG < 1.5 hr: Sel new TIG > 1.5 hr
(this pwrdn and the deorbit prep require 1.5 hr)

NOTE

Do NOT perform BUS LOSS ACTION unless bus shorted (step 29 regains bus)

* FC capability is ~12 kW for sustained operations, *
* ~13 kW for short duration (~4 hr), ~16 kW for *
* contingency situations (~10 min). Purge FC at *
* 430 amps or less *

MS 3. Perform AFT PNL PWRDN, 10-43, immed
C3 4. √MSTR MADS PWR – OFF
5. Minimize ltg
6. Use only one DDU, PGSC, and FLT CNTLR PWR as reqd. One IDP/CRT off as reqd
O7 7. √TACAN MODE sel (three) – OFF
O8 8. √RDR ALTM (two) – OFF
MS 9. √MLS (three) – OFF

If GPC 2 on:

10. GNC 0 GPC MEMORY
CONFIG – ITEM 1 +2 EXEC
Modify MC 2 per table – – – →

CONFIG GPC		2 10000
STR	1	1
	2	1
	3	1
	4	1
PL	1/2	0
CRT	1	1
	2	1
	3	0
	4	1
L	1	0
	2	0
MM	1	1
	2	1

For any IDP that is OFF:

11. GPC/CRT1/X EXEC
12. √DOWNLIST GPC (ITEM 44) – 1
CRT GNC, OPS 201 PRO
O6 13. GPC MODE 2 – STBY (tb-bp) – HALT
PWR 2 – OFF
14. √MODE 3,5 (two) – HALT (tb-bp)
PWR 3 – OFF
O15:F 15. √MMU 2 – OFF

Cont next page

OV103,104

16. GNC 20 DAP CONFIG
Sel TAIL PRI P,Y OPTION
Sel PRI JETS

O7 17. AFT L,R RCS MANF ISOL 4 (two) – CL

O14,O15, O16:F 18. RJDF DRIVER (four) – OFF
LOGIC (four) – OFF

O6 19. MDM FF4 – OFF

O14:F 20. RJDA 2A L4/R4 DRIVER – OFF
LOGIC – OFF

L1 21. √FLOW PROP VLV LOOP tb (two) – ICH

22. SM 88 APU/ENVIRON THERM

23. H2O LOOP 2 BYP MODE – MAN
MAN – INCR(DECR)
(adjust until ICH FLOW ~950)

If no MANF leak:

R1 24. √O2,H2 MANF VLV (four) – OP
TK1 HTRS B – AUTO (MNA or MNB ↓) or
TK2 HTRS B – AUTO (MNC or no MN BUS ↓), then:
All others OFF

If MANF leak:

25. √O2/H2 HTR LOSS TABLE (EPS), 5-20
Sel one htr in one O2,H2 TK

R2 26. HYD CIRC PUMP (three) – OFF

L4:L 27. cb AC1,2 ΦA CAB T CNTLR 1,2 (two) – op

If not MN bus short, tie three MN BUSES:

28. Perform BUS TIE (Cue Card), then:

Post BUS TIE config check:

L1 29. √CAB FAN A(B) – ON

30. Perform RCS SECURE, FWD RCS only (RCS), 8-2, then:

31. Perform MAL, EPS SSR-3, FC SHUTDN C&W LIMIT CHANGE, then:

32. Go to LOSS OF 2 FC (CONT DEORB). Refer to Activities Priority Table for activities to be performed in the CONT DEORB

AFT PNL PWRDN

A11 1. CRYO TK HTR (four) – OFF
A12 2. APU HTR LUBE OIL LN (three) – OFF
3. HYD HTR (eight) – OFF
A14 4. RCS/OMS HTR FWD RCS – OFF
RCS JET (five) – OFF
5. Perform PL SAFING, then:

> CAUTION
> If stow prob occurs with either RMS and/or KU-BD ANT, perform aff sys QUICK RESPONSE JETTISON (CONT DEORB)

If RMS grappled to OBSS:
6. Perform OBSS JETTISON (PDRS OPS FS, OBSS CONTINGENCY), then:
If RMS-only:
7. Perform RMS PWRDN (PDRS OPS), then:
If KU-BD ANT deployed:
8. Perform KU-BD ANT STOW (ORB OPS, COMM/INST), then:
If radiators deployed:
9. Perform RAD STOW (ORB OPS, ECLS), then:
A3 10. MON PWR (two) – OFF
R14:D 11. cb TV (fifteen) – op
:E CAMR (six) – op
ML86B:C 12. √cb MNB EXT AIRLK HTR VEST Z1/2/3 – op
If MMU is pwrd:
:D 13. cb MNA MMU PORT HTR A – op
STBD HTR A – op
MNB MMU PORT HTR B – op
STBD HTR B – op
MD44F 14. Cab temp cntl act link – pin to FULL COOL
If CO2 RMVL SYS flown:
MO51F 15. CO2 RMVL SYS CNTLR 1(2) MODE – STBY (hold 3 sec)
16. Remove current cans and install two fresh LiOH cans

This Page Intentionally Blank

LOSS OF 2nd FC ON-ORBIT (TIG > 4 hr)

NOTE

Do NOT perform BUS LOSS ACTION unless bus shorted (step 8 regains bus).

If docked with ISS, perform PWRDN completely prior to undocking

* FC capability is ~12 kW for sustained operations, *
* ~13 kW for short duration (~4 hr), ~16 kW for *
* contingency situations (~10 min). Purge FC at *
* 430 amps or less *

MS 1. Perform MS OVHD AND AFT PNL PWRDN, 10-47, immed

C3 2. √MSTR MADS PWR – OFF

GNC 21 IMU ALIGN

3. IMU 1,2 (two) – desel

If GPC 2(3) on:

4. GNC 0 GPC MEMORY
   CONFIG – ITEM 1 +2 EXEC
   Modify MC 2 per table – – – →
   √DOWNLIST GPC (ITEM 44) – 1

CRT GNC, OPS 201 PRO

For any IDP that is OFF:

5. GPC/CRT1/X EXEC

O6 6. GPC MODE 2 – STBY (tb-bp) – HALT
   PWR 2 – OFF
   √MODE 3,5 (two) – HALT (tb-bp)
   √PWR 3 – OFF

O15:F 7. MMU 2 – OFF

If not MN bus short, tie three MN buses:

8. Perform BUS TIE (EPS), 5-16, then:

9. Minimize ltg

10. Use one DDU, PGSC, and FLT CNTLR PWR as reqd. Use one IDP/CRT with four MDUs

O7 11. √TACAN MODE sel (three) – OFF

O8 12. √RDR ALTM (two) – OFF

13. √MLS (three) – OFF

CONFIG GPC		2 10000
STR	1	1
	2	1
	3	1
	4	1
PL	1/2	0
CRT	1	1
	2	1
	3	0
	4	1
L	1	0
	2	0
MM	1	1
	2	1

Cont next page

OV103,104

L1 14. √FLOW PROP VLV LOOP tb (two) – ICH
15. AV BAY 2 FAN A,B (two) – OFF
16. √CAB FAN A(B) – ON
L4:L 17. cb AC1,2 ΦA CAB T CNTLR 1,2 (two) – op
18. Perform GG FREE DRIFT, ATT ID B (mnvr in PRI, establish drift in VERN) (ORB OPS, RCS), then:
If docked with ISS, have ISS establish mated att control
19. Set event timer for 30 min (for FES duct htr deact)
O14,O15, O16:F 20. RJD LOGIC,DRIVER (seventeen) – OFF
O6 21. MDM FF1,FF2,FF4 (three) – OFF
FA1,FA2,FA3,FA4 (four) – OFF
L1 22. TOP EVAP HTR NOZ L,R (two) – OFF
23. √HI LOAD DUCT HTR sel – OFF
24. SM 88 APU/ENVIRON THERM
25. H2O LOOP 2 BYP MODE – MAN
MAN – INCR(DECR)
(adjust until ICH FLOW ~950)
If no MANF leak:
R1 26. √O2,H2 MANF VLV (four) – OP
TK1 HTRS B – AUTO (MNA or MNB ↓) or
TK2 HTRS B – AUTO (MNC or no MN BUS ↓), then:
All others OFF
If MANF leak:
27. √O2/H2 HTR LOSS TABLE (EPS), 5-20
Sel one htr in one O2,H2 TK
R2 28. BLR CNTLR/HTR (three) – OFF
29. HYD CIRC PUMP (three) – OFF
R4 30. Verify RMS, KU-BD ANT, and RADS stowed, then:
MA73C:A, B MCA LOGIC (fourteen) – OFF
If H2O LOOP 2 failed:
:A 31. MCA LOGIC MNB FWD 2 – ON
30 min after FES deact:
L1 32. TOP EVAP HTR DUCT sel – OFF
33. Perform MAL, EPS SSR-3, FC SHUTDN C&W LIMIT CHANGE, then:
If docked with ISS, perform UNDOCKING DELTAS prior to undocking
34. Go to LOSS OF 2 FC (CONT DEORB)

MS OVHD AND AFT PNL PWRDN

O14:A 1. IMU 1 – OFF (confirm IMU desel)
O15:A 2. 2 – OFF (confirm IMU desel)
O16:E 3. cb MNC RCS/OMS PRPLT QTY GAUGE – op
R14:D 4. TV (fifteen) – op
A11 5. CRYO TK HTR (four) – OFF
A12 6. APU HTR LUBE OIL LN (three) – OFF
7. HYD HTR (eight) – OFF
A14 8. RCS/OMS HTR FWD RCS JET 1,2,3,4 (four) – OFF
ML31C 9. VAC VENT NOZ HTR – OFF
ML86B:A 10. cb MNA H2O LN HTR A – op
11. MNB H2O LN HTR B – op
:C 12. √cb MNB EXT AIRLK HTR VEST Z1/2/3 – op
If MMU is pwrd:
:D 13. cb MNA MMU PORT HTR A – op
STBD HTR A – op
MNB MMU PORT HTR B – op
STBD HTR B – op
MD44F 14. Cab temp cntl act link – pin to FULL COOL
15. Perform PL SAFING, then:

CAUTION
If stow prob occurs with either RMS and/or KU-BD ANT, perform aff sys QUICK RESPONSE JETTISON (CONT DEORB)

If RMS grappled to OBSS:
16. Berth OBSS or perform OBSS JETTISON (PDRS OPS FS, OBSS CONTINGENCY), then:
If RMS-only:
17. Perform RMS PWRDN (PDRS OPS), then:
If KU-BD ANT deployed:
18. Perform KU-BD ANT STOW (ORB OPS, COMM/INST), then:
If radiators deployed:
19. Perform RAD STOW (ORB OPS, ECLS), then:
20. Report to CDR: RMS, KU-BD ANT, and RADS stowed
O14:F 21. MMU 1 – OFF
R14:E 22. cb CAMR (six) – op
A3 23. MON PWR (two) – OFF
If CO_2 RMVL SYS flown:
MO51F 24. CO_2 RMVL SYS CNTLR 1(2) MODE – STBY (hold 3 sec)
25. Remove current cans and install two fresh LiOH cans

UNDOCKING DELTAS

NOTE
Following steps reqd to recover RCS functionality prior to undock

	1.	One hour prior to undock:
A14		RCS/OMS HTR FWD RCS JET 1,2,3,4 (four) – ON
O14,O15, O16:F	2.	RJD LOGIC,DRIVER (seventeen) – ON
O6	3.	MDM FF1,FF2,FA1,FA2 (four) – ON

After undocking complete and post Final Sep:

	4.	Perform GG FREE DRIFT, ATT ID B (mnvr in PRI. Establish drift in VERN) (ORB OPS, RCS), then:
O14,O15, O16:F	5.	RJD LOGIC,DRIVER (seventeen) – OFF
O6	6.	MDM FF1,FF2,FA1,FA2 (four) – OFF
A14	7.	RCS/OMS HTR FWD RCS JET 1,2,3,4 (four) – OFF

LOSS OF 2 FREON LOOPS

WARNING
FC purge must be started and loads pwrd dn ASAP
Orbiter lifetime is expected to be 120 min from LOSS OF 2nd FREON LOOP with all three FCs running. This assumes three FCs are pwrd dn to a total level of 8 kW immed and are continuously purged
Earliest possible landing is reqd

NOTES

- Failure assumed to occur after GO for On-orbit and before Deorbit TIG-2:05
- COMM procs, 10-65 thru 10-68, should be used throughout this proc and CONT DEORB
- Preferred comm config is:
  A. UHF only
  B. GSTDN S-BD if reqd
  C. TDRS only if mandatory
- If docked to ISS, this proc is to be worked simo with JOINT EXPEDITED UNDOCKING AND SEPARATION (SODF: JOINT OPS)

Cont next page

TIME CRITICAL PROCEDURES

NOTE

Undocking will be performed with Single G2
(i.e., no +Z redundancy)

1. If in OPS 1: Go to LOSS OF 2 FREON LOOPS (POST OMS-2) (ASC PKT, PWRDN) >>
2. Have CDR perform JOINT EXPEDITED UNDOCKING AND SEPARATION (SODF: JOINT OPS)
3. Have MS exec RAD STOW, KU-BD ANT STOW, and PLBD CLOSE, 10-57, ASAP
4. Have second MS exec RMS STOW and MS OVHD AND AFT PNL CONFIG, 10-59 thru 10-62, ASAP
5. Have third MS exec COMM PWRDN, 10-65; delay 10 min max if AOS

Perform following steps ASAP:

O14,O15, O16:F	6.	√Pri RJD LOGIC,DRIVER (sixteen) – ON
		DAP: ALT (this proc results in loss of VERNs)
O16:F		RJD MANF L5/F5/R5 DRIVER – OFF
	7.	Record MET of failure of 2nd FREON LOOP: ___/___ ___:___ ___:___ ___
C3	8.	MSTR MADS PWR – OFF
MS R11U	9.	√FC PURGE HTR – ON
	10.	√VLVS 1,2,3 (three) – OP
	11.	Minimize ltg
CRTX	12.	Use only one fwd IDP/CRT with one MDU (save IDP3 for entry)
	13.	Use only one PGSC
F6/F8	14.	√FLT CNTLR PWR (two) – OFF, as reqd

Cont next page

Config GPC 1 to MC 2:

15. GNC 0 GPC MEMORY
16. CONFIG – ITEM 1 +2 EXEC

If not GNC 201, then:

17. GNC, OPS 201 PRO
18. Modify MC 2 per table

CONFIG GPC		2 10000
STR	1	1
	2	1
	3	1
	4	1
PL	1/2	0
CRT	1	1
	2	1
	3	0
	4	1
L	1	0
	2	0
MM	1	1
	2	1

NOTE

The following must be an OPS mode recall:
GNC, OPS 201 PRO

For any IDP that is OFF:

19. GPC/CRT1/X EXEC

C3 20. √BFC CRT DISP – OFF

O6 21. GPC MODE 2,3 (two) – STBY (tb-bp), HALT
– STBY (tb-RUN)
– HALT (tb-bp)
PWR 2,3 (two) – OFF
MODE 5 – STBY (tb-RUN)
– HALT (tb-bp)
OUTPUT 5 – NORM
PWR 5 – OFF

O7 22. √TACAN MODE sel (three) – OFF

O8 23. √RDR ALTM (two) – OFF

24. √MLS (three) – OFF

C3 25. FCS CH (four) – AUTO

R4 26. MPS MANF PRESS (two) – CL

R2 27. HYD CIRC PUMP (three) – OFF

28. MPS He ISOL (six) – CL
PNEU He ISOL – CL
L ENG He XOVR – CL

L1 29. HUM SEP (two) – OFF

30. √IMU FAN B – ON
A,C (two) – OFF

Cont next page

MD44F 31. Cab temp cntl act link – pin to FULL COOL
L1 32. CAB FAN A,B (two) – OFF
33. √AV BAY 1 FAN A – OFF
√2,3 FAN A,B (four) – OFF
√1 FAN B – ON
34. FREON PUMP LOOP 1,2 (two) – OFF (one-ON, if any flow)
35. RAD CNTLR LOOP 1,2 (two) – OFF
36. √NH3 CNTLR A,B (two) – OFF
If no FREON PUMPS ON, then:
L2 37. O2 SYS 1,2 SPLY (two) – OP (tb-OP)
L1 38. FLASH EVAP CNTLR PRI A,B (two) – OFF
TOP EVAP HTR NOZ (two) – OFF
DUCT sel – OFF
39. HI LOAD DUCT HTR sel – OFF
L2 40. FLASH EVAP FDLN HTR SPLY (two) – OFF
If one FREON PUMP ON:
L1 41. FLASH EVAP CNTLR PRI A – ON
42. TOP EVAP HTR NOZ (two) – OFF
√DUCT sel – ON
43. √HI LOAD DUCT HTR sel – ON
L2 44. FLASH EVAP FDLN HTR B SPLY – OFF
45. √ANTISKID – OFF
46. √NWS – OFF
O6 47. S TRK PWR -Y,-Z (two) – OFF
48. ANNUN BUS SEL ACA 2/3 – OFF
GNC 21 IMU ALIGN
49. IMU 1,2 (two) – desel
O14, O15:A – OFF

CAUTION
Do not perform steps 50 thru 56 until PLBDs are closed

C2 50. IDP/CRT MAJ FUNC (three) – GNC
O6 51. GPC MODE 4 – STBY (tb-bp)
– HALT
PWR 4 – OFF
GNC 0 GPC MEMORY
52. CONFIG – ITEM 1 +2 EXEC
53. Assign PL1/2 to GPC 1 (provides Uplk path)
54. GNC, OPS 201 PRO

Cont next page

55. All IDPs,MDUs – OFF (use one IDP/CRT with one MDU as reqd until CONT DEORB proc, 3 min OFF for each min ON)

O6 56. MDM FF1,4 (two) – OFF
FA1,4 (two) – OFF

F6 57. CDR disp sws – green dot

NOTE

If no site avail, bailout will be reqd; TIG will = MET of 2nd FREON LOOP failure + 1 hr

58. Sel ELS TIG ≤ 1 hr after MET of 2nd FREON LOOP failure (from MCC or PGSC):
Selected TIG ___:___:___ MET
(-) Present TIME ___:___:___ MET
(=) Time to TIG ___:___:___ MET

If PL MDMs not currently being used for comm:

59. Verify PLBDs are closed, then:

O6 √MDM PL1,PL2 (two) – OFF

L4:J 60. cb AC3 ΦA SIG CONDR HUM SEP – op
ΦB SIG CONDR IMU FAN – op

:L 61. AC1 ΦA CAB T CNTLR 2 – op
ΦB AV BAY 2 S/C – op

62. AC2 ΦA CAB T CNTLR 1 – op
ΦB AV BAY 3 S/C – op
AC3 ΦA H2O CNTLR 1 – op

R1 63. MN BUS TIE (three) – ON

64. √O2,H2 MANF VLV TK1,TK2 (four) – op
TK2 HTRS A,B (four) – OFF
TK1,TK3 HTRS A,B (eight) – AUTO

If O2 TK1(TK3) QTY < 80%:

65. O2 TK1,TK3 HTRS A (two) – OFF

R2 66. BLR CNTLR/HTR 2 – OFF
PWR 2 – OFF

If not docked with ISS or when undocking complete and Post Final Sep:

67. Perform POST UNDOCKING AND FINAL SEP RECONFIG, 10-55

68. Go to ENTRY CONFIG (CONT DEORB, <u>LOSS OF 2 FREON LOOPS D/O PREP</u>) by ~ TIG-15 >>

This Page Intentionally Blank

POST UNDOCKING AND FINAL SEP RECONFIG

	1.	DAP: FREE
O14,O15, O16	2.	RJD LOGIC,DRIVER (seventeen) – OFF
O14:B	3.	cb MNA OI SIG CONDR OF 1/4 A – op
O15:B	4.	cb MNB OI SIG CONDR OF 1/4 B – op 2/3 A – op
O16:B	5.	cb MNC OI SIG CONDR OF 2/3 B – op
O14,O15, O16:E	6.	√cb L,R,AFT DDU (six) – op

This Page Intentionally Blank

MS PULLOUT PAGE

MS Execute ASAP

R11U 1. FC PURGE HTR – ON
VLVS (three) – OP
2. Minimize ltg on Aft Flt Deck
If CO2 RMVL SYS flown:
MO51F 3. CO2 RMVL SYS CNTLR 1(2) MODE – STBY (hold 3 sec)

NOTE
For following RAD STOW, KU-BAND ANT STOW, and PLBD CLOSE procs, use the following MCA config. Disregard MCA sw throws in other procs until PLB doors closed

MCA LOGIC CONFIG

MA73C:A, B 4. √All MCA LOGIC (fourteen) – ON
:A 5. MCA LOGIC MNA FWD 1 – ON
MNB FWD 2 – OFF
MID 1 – OFF
MNC FWD 3 – OFF
:B MNA AFT 1 – OFF
MNB AFT 2 – OFF
MID 3 – OFF
MNC AFT 3 – OFF
6. GNC 23 RCS
ITEM 1 EXEC (FRCS page)
OVRD FRCS MANF(s) – OP

CAUTION
If stow prob occurs with KU-BD ANT, perform QUICK RESPONSE JETTISON (CONT DEORB)

If KU-BD ANT deployed:
7. Perform KU-BD ANT STOW (ORB OPS, COMM/INST), then:
If radiators deployed:
8. Perform RAD STOW (ORB OPS, ECLS), then:

Cont next page

PLBD CLOSURE

> WARNING
> Verify no obstructions before closing and latching PLBD (Ku ANT,RAD,RMS,etc)

```
O6          1.   √MDM PL1,PL2 (two) – ON
                 SM I/O RESET
            2.   Verify PL SAFING complete
CRT4        3.   SM, OPS 202 PRO – close PLBD ASAP
            4.   SM PL BAY DOORS
R13L        5.   PL BAY DR SYS 1,2 (two) – ENA
CRT4        6.   AC POWER ON – ITEM 1 EXEC
                 AUTO MODE SEL – ITEM 3 EXEC
                 PBD SW BYPASS – ITEM 14 EXEC
                       CLOSE – ITEM 17 EXEC
            If 'PLB SEQ FAIL' msg during door closure and aft latches
            :  for that door are not 'CL':
            :    7.   Check door scallop on or below tgt line before
            :         continuing in MAN mode; otherwise:
            :              8.   Perform MAL, MECH SSR-2,
            L                   CONTINGENCY PLBD CLOSURE, then:
            9.   PBD STOP – ITEM 16 EXEC
            10.  AC POWER OFF – ITEM 2 EXEC
                 GPC/CRT 04 EXEC
R11L        11.  IDP/CRT4 PWR – OFF
R13L        12.  PL BAY DR SYS (two) – DSBL
A7U                    √FLOOD (all) – OFF
MA73C:A,    13.  All MCA LOGIC sw except MNA FWD 1 (thirteen)
      B                                                  – OFF
      :A         √MCA LOGIC MNA FWD 1 – ON
            14.  GNC 23 RCS
                 ITEM 1 EXEC (FRCS page)
                 OVRD FRCS MANF(s) – OP
            15.  Report to CDR:  RMS, KU-BD ANT, and RADS stowed;
                 PLBD closed
            16.  Go to FLUID LOADING PREP, 10-63
```

RMS STOW

NOTE
For following RMS STOW, use following MCA config. Disregard MCA sw throws in other procs until PLB doors closed

MA73C:A, B
1. √MCA LOGIC MNA MID 1 – ON
√3 – ON
√MNB MID 2 – ON
√4 – ON
√MNC MID 2 – ON
√4 – ON
2. Perform PL SAFING, then:

CAUTION
If stow prob occurs with RMS, perform QUICK RESPONSE JETTISON (CONT DEORB)

If RMS grappled to OBSS:
3. Perform OBSS JETTISON (PDRS OPS FS, OBSS CONTINGENCY), then:

If RMS-only:
4. Perform RMS PWRDN (PDRS OPS), then:

MS OVHD AND AFT PNL CONFIG

O13:A
1. cb ESS 1BC C/W A – op
:B CRYO QTY O2,H2 TK2 (two) – op
:C 2CA C/W B – op
(all SM tones and C/W lights and tones lost; CRT FAULT SUMM and SM ALERT light remains)
cb ESS 2CA MTU B – op
:E 3AB GPC STAT – op
O14:A
2. √BRAKES MNA – OFF
3. √RGA 1 – OFF
:B
4. cb MNA OI SIG CONDR OM 1/2 A – op
MDM OF 1/2 A – op
3/4 A – op
H2O BYP LOOP 1 SNSR – op
MSN TIMER FWD – op
EVENT TIMER AFT – op

Cont next page

O14:C 5. cb MNA UTIL PWR O19/MO52J – op
:D FREON RAD CNTLR 1,2 (two) – op
O2/N2 CNTLR 1 – op (leave cl if PCS 1 active)
CAB VENT – op
VENT ISOL – op
:E √ADTA 1 – op
√ACCEL 1 – op
DDU L,AFT (two) – op
:F 6. MMU 1 – OFF
7. ASA 1 – OFF
O15:A 8. √BRAKES MNB – OFF
9. √RGA 2 – OFF
4 – OFF
:B 10. cb MNB OI MDM OF 1/2 B – op
H2O BYP LOOP 2 SNSR – op
MSN TIMER AFT – op
EVENT TIMER FWD – op
:C UTIL PWR F1/MO13Q – op (leave cl if PGSC reqd)
:D FREON RAD CNTLR 1,2 (two) – op
O2/N2 CNTLR 2 – op (leave cl if PCS 2 active)
:E ADTA 2 – op
ACCEL 2 – op
DDU L,R (two) – op
:F 11. MMU 2 – OFF
12. ASA 2 – OFF
13. ACCEL 4 – OFF
O16:A 14. √BRAKES MNC – OFF
15. √RGA 3 – OFF
:B 16. cb MNC OI MDM OF 3/4 B – op
AUX TIMING BUFF – op
:C 17. CRYO O2 HTR TK2 SNSR 1 – op
If GALLEY:
18. cb MNC UTIL PWR A11/A15/MO30F – op

Cont next page

O16:C	19.	cb MNC ANNUN AFT ACA 4/5 – op
		O2 EMER – op
:E		ADTA 3,4 (two) – op
		DDU R,AFT (two) – op
		RCS/OMS PRPLT QTY GAUGE – op
:F	20.	ASA 3,4 (two) – OFF
	21.	ACCEL 3 – OFF
O17:A	22.	ATVC (four) – OFF
:B	23.	EIU (three) – OFF
:C	24.	SIG CONDR FREON A,B (two) – OFF
:D		OA 1/2/3 – OFF
	25.	MDM OA 1/2/3 – OFF
	26.	MEC 1 – OFF, wait 2 sec, then
		2 – OFF
MO58F	27.	TV PWR – OFF
O19	28.	COAS – OFF
A11	29.	CRYO TK4 HTR O2,H2 A,B (four) – OFF
A12	30.	APU HTR GAS GEN/FU PUMP 2 – OFF
		LUBE OIL LN 1,2,3 (three) – OFF
		APU HTR TK/FU LN/H2O SYS
		1B,2A,2B,3A (four) – OFF
		1A,3B (two) – AUTO
	31.	HYD HTR (eight) – OFF
A13	32.	OS AUD SPKR PWR – OFF
	33.	GPS PWR – OFF
		PRE AMPL (two) – OFF
A14	34.	RCS/OMS HTR FWD RCS – OFF
		L,R POD (four) – OFF
		OMS CRSFD LN (two) – OFF
		FWD RCS JET (five) – OFF
		AFT RCS JET (five) – OFF
A15	If OV-103:	
	35.	PTU/MAIN BUS A,B (two) – OFF (tb-OFF)
A6U	36.	FLT CNTLR PWR – OFF, as reqd
	37.	ANNUN BUS SEL – OFF

Cont next page

R14:A	38.	cb MNA ADC 1A/2A – op
		MNB ADC 1B/2B – op
:B		MNA,MNB,MNC PALLET DSC (three) – op
:D	39.	TV (fifteen) – op
:E		CAMR (six) – op
L9,R10	40.	PS,MS AUD PWR (two) – OFF
	41.	Minimize Middeck ltg
ML31C	42.	VAC VENT NOZ HTR – OFF
ML86B:A	43.	cb MNB H2O LN HTR B – op
	If MMU is pwrd:	
:D	44.	cb MNA MMU PORT HTR A – op
		STBD HTR A – op
		MNB MMU PORT HTR B – op
		STBD HTR B – op
MO39M	45.	MIDDECK COMM CCU PWR – OFF
MO42F		SPKR AUD PWR – OFF
	If no GALLEY:	
	46.	Go to step 49
GALLEY	47.	OVEN/RHS – OFF
		H2O HTR (two) – OFF
		√OVEN FAN – OFF
	48.	Go to step 51
	49.	FOOD WARMER – OFF
	50.	H2O DISPENSER PWR pb – OFF
MD44F	51.	Cab temp cntl act link – pin to FULL COOL
MO13Q	52.	All MIDDECK lts – lt off

FLUID LOADING PREP

GALLEY
1. OVEN/RHS – ON
2. Unstow, fill 4 water containers (per crewmember) with 8 oz of water each. Temp stow near seat
3. Unstow 8 salt tablets (per crewmember). Temp stow in Flt Suit pocket
4. OVEN/RHS – OFF
5. √H2O HTR (two) – OFF
6. √OVEN FAN – OFF
7. Stow Personal Hygiene Hose

NOTE

Ensure sufficient containers and salt tablets are prepared to continue fluid loading thru entry

FLUID LOADING

Immed (or as soon as time permits), begin drinking H2O (one 8-oz container every 15 min with a salt tablet in every other container); continue thru entry

CLOTHING CONFIG

Don QDM for temp > 90 degF and discomfort. If cab temp > 95 degF and no evaporative cooling is sensed, don LES, check tabs, close visor, LES O2 – ON

NOTE

Inflate anti-g suit as needed for on-orbit circulatory support

FDF CONFIG

1. Unstow: ENT, ENT PKT, ENT Cue Cards
2. Use DEORBIT BURN MONITOR and ENTRY MANEUVERS Cue Card (CONT DEORB, LOSS OF 2 FREON LOOPS D/O PREP)

CAB CONFIG

1. Stow loose equipment

After Deorbit Targeting complete:

2. Stow Backup PGSC
3. Remove and stow Side hatch UV filter, locking device, and pyro box safing pin
4. Tape foot loops in egress routes
5. Remove and stow Window Shades (if not needed for cab T control)

WCS DEACT

WCS 1. Foot Restraints – up, locked
ML31C 2. VAC VENT ISOL VLV CNTL – CL (tb-CL)
If EDO WCS:
WCS 3. URINAL SEL – OFF
4. WCS PWR SEL (two) – OFF1,OFF2
5. √FAN PWR – AUTO

POLE SETUP

Perform ESCAPE POLE STOWAGE/SETUP (Cue Card), then:

SEAT INSTALLATION

1. Confirm minimum ltg on Middeck
2. Unstow LOSS OF 2 FREON LOOPS D/O PREP (CONT DEORB); perform MS PAGE procs

NOTE

The COMM PWRDN and POWERUP procs on this and following pages should be used until Touchdown

COMM PWRDN

MS Pwr dn comm ASAP after comm with MCC no longer reqd. Delay 10 min max if AOS. Use COMM POWERUP, 10-67, if MCC comm reqd. Comm will be pwrd on entry by AFT PNL CONFIG FOR ENTRY COMM, MS PULLOUT PAGE (CONT DEORB, LOSS OF 2 FREON LOOPS D/O PREP) and special ENTRY MANEUVERS Cue Card

A1L	1.	S-BD PM ANT SW ELEC – OFF PRE AMP – OFF PWR AMPL STBY – OFF OPER – OFF MODE sel – STDN LO XPNDR – OFF
	2.	NSP PWR – OFF ENCRYPTION PWR – OFF (Encrypt disabled rest of flt) ENCRYPTION MODE – SEL SEL – BYP
C3	3.	S-BD PM CNTL – PNL,CMD OI PCMMU FORMAT – FXD PWR – OFF AUD CTR – OFF (pwr up as reqd for cockpit audio)
A1L	4.	√S-BD PL CNTL – PNL √PWR SYS – OFF PL DATA INTLVR PWR – OFF
A1R	5.	S-BD FM CNTL – PNL PWR – OFF
A3	6.	MON PWR (two) – OFF
A7U	7.	TV PWR CONTR UNIT – OFF
O6	8.	UHF MODE sel – OFF
	9.	MDM PL1,PL2 (two) – OFF
R12L	10.	VTR PWR – OFF
R14:B	11.	cb MNA,MNC GCILC (two) – op

Cont next page

NOTE

During each comm window, voice down cab temp, crew body temps and heart rates, per COMM POWERUP, 10-67; indicate severity of cab humidity

If after TIG-10:

12. Go to AFT PNL CONFIG FOR ENTRY COMM, MS PULLOUT PAGE (CONT DEORB, LOSS OF 2 FREON LOOPS D/O PREP)

COMM POWERUP (If comm reqd prior to landing site coverage)

```
            Pwr up audio sys:
C3              1.      AUD CTR – 1
O5                    √L AUD PWR – AUD
O9                    √R AUD PWR – AUD
            If UHF avail, config for UHF comm (voice only):
O6          |   2.      UHF MODE sel – SPLX
            |               √SPLX/EVA PWR AMPL – ON
            |   3.      After comm with MCC complete:  Go to COMM
            |           PWRDN, 10-65  >>
            If UHF site unavail or if MCC requests data
            |  (config for GSTDN(SGLS) S-BD):
C3          |   4.    √S-BD PM CNTL – PNL
A1L         |                 ANT SW ELEC – 2
            |                 MODE sel – STDN LO(SGLS)
            |                 XPNDR – 2
            |   5.      NSP PWR – 2
            |               DATA RATE XMIT – HI
            |                         RCV  – HI
            |               CODING XMIT – OFF
            |                       RCV – OFF
            |             √UPLK DATA – S-BD
C3/F9       |   6.      Sel best S-BD PM ANT
            |   If MCC requests data:
O14:B       |   :   7.      cb MNA OI MDM OF 1/2 A,3/4 A (two) – cl
O17:D       |   :   8.      SIG CONDR OA 1/2/3 – ON
            |   :   9.      MDM OA 1/2/3 – ON
C3          |   :   10.     OI PCMMU PWR – 1
O6          |   :   11.     MDM PL2 – ON
            |   :   12.     GNC I/O RESET
            |   :   At end of data transmission:
O14:B       |   :       13.     cb MNA OI MDM OF 1/2 A,3/4 A (two) – op
O17:D       |   :       14.     SIG CONDR OA 1/2/3 – OFF
            |   :       15.     MDM OA 1/2/3 – OFF
            |   :   After comm/data complete:
            |   L       16.     Go to COMM PWRDN, 10-65
            ~
```

Cont next page

If UHF site and GSTDN unavail and comm/data critical:
Config for TDRS S-BD:

CAUTION
This is a High Pwr Mode. On-time should be limited to 10 min max due to Pwr Amp Thermal constraints. A 3-min delay occurs after S-BD PM PNL/CMD before Pwr Amp is active. Uplink not affected. Proceed with selection of best antenna

C3 17. √S-BD PM CNTL – PNL
A1L 18. √ANT SW ELEC – 2
√PRE AMP – 2
√PWR AMPL OPER – 2
MODE sel – TDRS DATA
√XPNDR – 2
19. √NSP PWR – 2
√DATA RATE XMIT – HI
RCV – HI
CODING XMIT – ON
RCV – ON
√UPLK DATA – S-BD
C3/F9 20. Sel best S-BD PM ANT
If MCC requests data:
O14:B : 21. cb MNA OI MDM OF 1/2 A,3/4 A (two) – cl
O17:D : 22. SIG CONDR OA 1/2/3 – ON
: 23. MDM OA 1/2/3 – ON
C3 : 24. OI PCMMU PWR – 1
O6 : 25. MDM PL2 – ON
: 26. GNC I/O RESET
: At end of data transmission:
O14:B : 27. cb MNA OI MDM OF 1/2 A,3/4 A (two) – op
O17:D : 28. SIG CONDR OA 1/2/3 – OFF
L 29. MDM OA 1/2/3 – OFF
After comm/data complete:
30. Go to COMM PWRDN, 10-65

LOSS OF FES

MS Perform MS PWRDN, 10-71, immed

C3 1. √MSTR MADS PWR – OFF
2. Minimize ltg
3. Use one PGSC, and one IDP/CRT with two MDUs only as reqd

If FLT CNTLR PWR not reqd:

O14,O15, O16:E 4. cb DDU L,R,AFT (six) – op

O7 5. √TACAN MODE sel (three) – OFF

O8 6. √RDR ALTM (two) – OFF
7. √MLS (three) – OFF
8. Perform PL PWRDN, then:

L1 9. CAB TEMP CNTLR – OFF
10. H2O LOOP 2 BYP MODE – MAN
MAN – DECR (hold 30 sec)
PUMP LOOP 1 (two) – OFF, B
11. √FLOW PROP VLV LOOP tb (two) – ICH
12. √TOP EVAP HTR NOZ L,R (two) – OFF
√DUCT sel – OFF
13. √HI LOAD DUCT HTR sel – OFF

L2 14. √NWS – OFF
15. √ANTISKID – OFF

L4:L 16. cb CAB T CNTLR 1,2 (two) – op

R2 17. BLR CNTLR/HTR (three) – OFF

MMU 2 deact:

18. SM 1 DPS UTILITY
√MMU ASSIGN 1 SM – ITEM 3 EXEC

O15:F MMU 2 – OFF

If IMU ALIGN not reqd, mnvr to tail Sun att:

19. GNC UNIV PTG

TGT ID	– ITEM 8	+4 EXEC
BODY VECT	– ITEM 14	+5 EXEC
P	– ITEM 15	+184 EXEC
Y	– ITEM 16	+0 EXEC
OM	– ITEM 17	+90 EXEC ($\beta < 0$)
		+270 EXEC ($\beta > 0$)
START TRK	– ITEM 19	EXEC

20. Confirm MS pwrdn activities complete, then:

For deorbit prep:

21. Go to LOSS OF FES (CONT DEORB)

This Page Intentionally Blank

MS PULLOUT PAGE

MS2 Deploy rads, RAD DEPLOY (ORB OPS, ECLS)
MS1 Perform pwrdn below

MS PWRDN

	1.	Minimize ltg
O14, O15, O16:A	2.	√BRAKES (three) – OFF
O14 O15, O16:E	3.	√cb ADTA (four) – op
O14:B	4.	MSN TIMER FWD – op EVENT TIMER AFT – op
O15:B	5.	MSN TIMER AFT – op EVENT TIMER FWD – op
A1L	6.	PL DATA INTLVR PWR – OFF
A12	7.	APU HTR LUBE OIL LN (three) – OFF
	8.	HYD HTR (eight) – OFF
A14	9.	RCS/OMS HTR FWD RCS – OFF L,R POD (four) – OFF OMS CRSFD LN (two) – OFF
R14:D :E	10.	cb TV (fifteen) – op CAMR (six) – op
A3	11.	MON 1,2 PWR (two) – OFF
ML31C	12.	VAC VENT NOZ HTR – OFF
		If Manned Mnvr Unit is pwrd:
ML86B:D	13.	cb MNA,MNB STBD HTR A,B (two) – op PORT HTR A,B (two) – op
MD44F	14.	Cab temp cntl act link – pin to FULL COOL

This Page Intentionally Blank

AV BAY FIRE

AV BAY 1

NOTE

While performing proc, note any cbs open.

Equipment still pwrd in Av Bay following pwrdn:

FPCA 1	MDM OF1
FLCA 1	DSC OF1
IMU FAN	ACCU

If docked with ISS, proc results in loss of Lo Z Translation.

If no active GNC GPC: Perform GNC RECOVERY VIA G2FD (DPS), 3-12, concurrent with remainder of this proc

R1 1. cb AC CONTR AC1 (three) – cl
2. INV/AC BUS 1 – OFF (tb-OFF)
INV PWR 1 – OFF (tb-OFF)
3. cb AC CONTR AC1 (three) – op
4. Perform FC1 SHUTDN, except PWRDN (Cue Card), then:

L1 5. √AV BAY 1 FAN A,B (two) – OFF
6. FREON PUMP LOOP 2 – A
7. AV BAY 3 FAN A – ON
B – OFF

C3 8. OI PCMMU FORMAT – FXD
PWR – 2
9. BFC CRT DISP – ON

O6 10. √GPC PWR 5 – ON
√OUTPUT 5 – NORM
MODE 5 – STBY (tb-RUN), RUN
11. 4 – STBY (tb-bp), HALT
PWR 4 – OFF

If GNC RECOVERY VIA G2FD (DPS), 3-12, performed:
12. Go to step 15

If Single G2 GPC OPS:
13. Perform G2 SET EXPANSION, target Dual G2 (ORB OPS, DPS), then:

If/when in Multiple GPC OPS:
14. Reassign strings to GPC 2 in MC 2
GNC 0 GPC MEMORY

Cont next page

CRT		CONFIG – ITEM 1 +2 EXEC
		Modify MC 2 per table – – – →
		DOWNLIST GPC – ITEM 44 +2 EXEC
		GNC, OPS 201 PRO
O6	15.	GPC MODE 1(3) – STBY (tb-bp) – HALT
		PWR 1 – OFF
	16.	MDM FF1 – OFF
		PL1 – OFF
O7	17.	√TACAN 1 MODE sel – OFF
O8	18.	√RDR ALTM 1 – OFF
	19.	√MLS 1 – OFF
	20.	GNC 23 RCS
CRT		RCS FWD – ITEM 1 EXEC (*)
		MANF VLVS STAT OVRD – ITEM 41 EXEC – CL (MANF 2)
O13:A	21.	cb ESS 1BC AC1 SNSR – op
:E		3AB GPC STAT – op
O14:A	22.	√BRAKES MNA – OFF
:C	23.	cb MNA TACAN 1 – op
:E	24.	RDR ALTM 1 – op
		MLS 1 – op
		√ADTA 1 – op
		√ACCEL 1 – op
:F	25.	MMU 1 – OFF
	26.	RJDF 1B F1 LOGIC – OFF
		DRIVER – OFF
O15:F	27.	RJDF 1A F2 LOGIC – OFF
		DRIVER – OFF
	28.	√ACCEL 4 – OFF
O16:A	29.	√BRAKES MNC – OFF
:E	30.	√cb MNC ADTA 3 – op
A1R	31.	PL DATA INTLVR PWR – OFF
	32.	S-BD PL CNTL – PNL,CMD
MA73C:A	33.	MCA LOGIC MNA FWD 1 – OFF
AW18H	34.	√PWR/BATT CHGR EMU 1,2 BUS SEL (two) – OFF
A12	35.	HYD CIRC PUMP PWR 1 – MNB
		2 – MNC
		3 – MNA

CONFIG		2
GPC		02000
STR	1	2
	2	2
	3	2
	4	2
PL	1/2	0
CRT	1	2
	2	2
	3	0
	4	2
L	1	0
	2	0
MM	1	2
	2	2

Cont next page

L4:G 36. cb AC2 ΦA,ΦB,ΦC AV BAY 1 FAN B (three) – op

37. Perform MAL, EPS SSR-110, BUS LOSS: AC1, except:

L1 √AV BAY 1 FAN A,B (two) – OFF, then:

38. Reassign SM into GPC 3, per MAL, DPS SSR-4, SM REASSIGNMENT

39. Perform LOAD PCMMU FORMAT, using TFL 161/103 (ORB OPS FS, COMM/INST), then:

C3 40. BFC CRT DISP – OFF

SEL – 3+1

Check all IDPs deassigned from BFS

O6 GPC MODE 5 – STBY,HALT (tb-bp)

√OUTPUT 5 – NORM

For deorb prep:

If orbit 3 deorbit:

41. Go to LAUNCH DAY DEORBIT PREP (ORBIT 3) (CONT DEORB) >>

42. Perform MAL, ECLS SSR-12, AV BAY FIRE RECOVERY/RECONFIG, Checkout and Recovery, then:

For deorb prep:

If orbit 7 deorbit:

43. Perform P&I nominal POST INSERTION, DEORB PREP (POST INSERT, ORBIT 7 D/O), then:

44. Go to AV BAY FIRE (DEORB PREP, CONTINGENCY DELTAS)

This Page Intentionally Blank

AV BAY 2

NOTE

While performing proc, note any cbs open.

Equipment still pwrd in Av Bay following pwrdn:

FPCA 2 MDM OF2
FLCA 2 DSC OF2
BFC 3A (When GPC 3 is powered).

If docked with ISS, proc will require ISS to control mated attitude or result in loss of mated attitude control. Proc also results in loss of Lo Z Translation

R1 1. cb AC CONTR AC2 (three) – cl
2. INV/AC BUS 2 – OFF (tb-OFF)
INV PWR 2 – OFF (tb-OFF)
3. cb AC CONTR AC2 (three) – op
4. Perform FC2 SHUTDN, except PWRDN (Cue Card), then:
L1 5. IMU FAN A(C) – ON
B – OFF
6. AV BAY 1 FAN A – ON
B – OFF
7. FREON PUMP LOOP 1 – A
8. √CAB FAN A – ON
√B – OFF
9. √AV BAY 2 FAN A,B (two) – OFF
C3 10. √OI PCMMU PWR – 1
A1L 11. √S-BD PM MODE sel – TDRS DATA
√NSP DATA RATE XMIT – HI
√RCV – HI
√CODING XMIT – ON
√RCV – ON
√PWR – 1
√UPLK DATA – S-BD
C3 12. S-BD PM CNTL – PNL,CMD

Cont next page

REASSIGN STRINGS TO GPC 1 IN MC 2

13. GNC 0 GPC MEMORY

CRT — CONFIG – ITEM 1 +2 EXEC
Modify MC 2 per table – – – →

CONFIG		2
GPC		10000
STR	1	1
	2	1
	3	1
	4	1
PL	1/2	0
CRT	1	1
	2	1
	3	0
	4	1
L	1	0
	2	0
MM	1	1
	2	1

14. GNC, OPS 201 PRO

O6 — 15. GPC MODE 2 – STBY(tb-bp)
– HALT
PWR 2 – OFF
√MODE 5 – HALT
√OUTPUT 5 – NORM
√PWR 5 – OFF

16. MDM FF2,FF4 (two) – OFF
PL2 – OFF

O7 — 17. √TACAN 2 MODE sel – OFF

O8 — 18. √RDR ALTM 2 – OFF

19. √MLS 2,3 (two) – OFF

O13:C — 20. cb ESS 2CA AC2 SNSR – op

O15:A — 21. √BRAKES MNB – OFF

If OV103:

:C — 22. cb MNB TACAN 2 – op

:E — 23. cb MNB RDR ALTM 2 – op
MLS 2 – op
√ADTA 2 – op
√ACCEL 2 – op

If OV104:

:E — 24. cb MNB TACAN 2 – op

:F — 25. MMU 2 – OFF

O14,O15, O16:F — 26. √RJDA LOGIC,DRIVER (eight) – ON

27. GNC 20 DAP CONFIG – sel tail only
P,Y OPTION – ITEM 15,16 EXEC (TAIL)
– ITEM 35,36 EXEC (TAIL)

28. DAP: PRI

O16:A — 29. √BRAKES MNC – OFF

:E — 30. cb MNC MLS 3 – op
√ADTA 4 – op

:F — 31. RJDF 2A F3 LOGIC – OFF
DRIVER – OFF
2B F4/F5 LOGIC – OFF
F4 DRIVER – OFF

32. √ACCEL 3 – OFF

33. RJD MANF L5/F5/R5 DRIVER – OFF

A1L — 34. S-BD PL PWR SYS – OFF
CNTL – PNL,CMD

Cont next page

OV103,104

A12 35. √HYD CIRC PUMP PWR 1 – MNA
2 – MNB
3 – MNC

MA73C:A 36. MCA LOGIC MNB FWD 2 – OFF

L4:H 37. cb AC3 AV BAY 2 FAN B (three) – op

38. Perform MAL, EPS SSR-120, BUS LOSS: AC2, except:
L1 √AV BAY 2 FAN A,B (two) – OFF, then:

39. Reassign BFS into GPC 3, per MAL, DPS SSR-7, GPC IPL MENU OPTION (PASS/BFS)

For deorb prep:
If orbit 3 deorbit:
40. Go to LAUNCH DAY DEORBIT PREP (ORBIT 3) (CONT DEORB) >>

41. Perform MAL, ECLS SSR-12, AV BAY FIRE RECOVERY/RECONFIG, Checkout and Recovery, then:

For deorb prep:
If orbit 7 deorbit:
42. Perform Deltas to nominal POST INSERTION, DEORB PREP (POST INSERT, ORBIT 7 D/O), then:

43. Go to AV BAY FIRE (DEORB PREP, CONTINGENCY DELTAS)

This Page Intentionally Blank

AV BAY 3A

NOTE

While performing proc, note any cbs open.

Equipment still pwrd in Av Bay following pwrdn:

FPCA 3 MDM OF3 GCIL
FLCA 3 DSC OF3
Active comm sys equipment
S-BD PWR-AMP stby (alt sys)

R1 1. cb AC CONTR AC3 (three) – cl
2. INV/AC BUS 3 – OFF (tb-OFF)
INV PWR 3 – OFF (tb-OFF)
3. cb AC CONTR AC3 (three) – op
4. Perform FC3 SHUTDN, except PWRDN (Cue Card), then:

L1 5. AV BAY 3 FAN A,B (two) – OFF
6. CAB FAN B – ON
A – OFF

L4:F 7. cb AC1 H2O LOOP PUMP 1A/2 (three) – cl
L1 H2O PUMP LOOP 1 – ON
2 – GPC

If Triple G2:

CRT 8. CONFIG – ITEM 1 +2 EXEC
Modify MC 2 per table – – – →
9. GNC, OPS 201 PRO

O6 10. √GPC MODE 3 – HALT
√OUTPUT 3 – NORM
√PWR 3 – OFF
11. MDM FF3 – OFF

O7 12. √TACAN 3 MODE sel – OFF

O13:A :C 13. cb ESS 1BC C/W A – op
2CA C/W B – op
(all SM tones and C/W lights and tones lost; CRT FAULT SUMM and SM ALERT light remains)

O13:E 14. cb ESS 3AB AC3 SNSR – op
15. Perform LOSS OF VERNIERS (ORB OPS, RCS) while continuing with pwrdn, then:

CONFIG		2
GPC		12000
STR	1	1
	2	2
	3	1
	4	2
PL	1/2	0
CRT	1	1
	2	2
	3	0
	4	1
L	1	0
	2	0
MM	1	1
	2	2

Cont next page

If comm not working:

A1L 16. √S-BD PM MODE sel – TDRS DATA
√NSP DATA RATE XMIT – HI
√RCV – HI
√CODING XMIT – ON
√RCV – ON
√PWR – 1
√UPLK DATA – S-BD

C3 17. S-BD PM CNTL – PNL,CMD

If comm still not working:

18. S-BD PL CNTL – PNL
PWR SYS – OFF

A1L 19. PL DATA INTLVR PWR – OFF

C3 20. S-BD PM CNTL – PNL

A1L ANT SW ELEC – OFF
PRE AMP – OFF
PWR AMPL STBY – OFF
OPER – OFF
XPNDR – OFF

21. NSP PWR – OFF
ENCRYPTION PWR – OFF

MA73C:A 22. MCA LOGIC MNC FWD 3 – OFF

NOTE

If comm presently working, performing a PNL,CMD may result in loss of comm (if fire has aff alt comm sys)

L4:H 23. cb AC1 AV BAY 3 FAN B (three) – op

O16:C 24. MNC TACAN 3 – op

25. Perform MAL, EPS SSR-130, BUS LOSS: AC3, except:
L1 √AV BAY 3 FAN A,B (two) – OFF, then:

For deorb prep:

If orbit 3 deorbit:

26. Go to LAUNCH DAY DEORBIT PREP (ORBIT 3) (CONT DEORB, LAUNCH DAY ORBIT 3) >>

27. Perform MAL, ECLS SSR-12, AV BAY FIRE RECOVERY/RECONFIG, Checkout and Recovery, then:

For deorb prep:

If orbit 7 deorbit:

28. Perform Deltas to nominal POST INSERTION, DEORB PREP (POST INSERT, ORBIT 7 D/O), then:

29. Go to AV BAY FIRE (DEORB PREP, CONTINGENCY DELTAS)

PWRDN

LOSS OF 2 CAB FANS 10-2
2 H2O LOOPS 10-7
CAB PRESS..... 10-27
HI LOAD EVAP 10-33
1 FREON LOOP..... 10-35
1 FC..... 10-39
2nd FC ON-ORBIT (TIG < 4 hr)..... 10-41
(TIG > 4 hr)..... 10-45
2 FREON LOOPS 10-49
FES 10-69
AV BAY FIRE..... 10-73
1 10-73
2 10-77
3A..... 10-81

PWRDN

LOSS OF 2 CAB FANS

MS1,2 1. Perform MS PWRDN, 10-5, ASAP

NOTE

Normal CO2 removal and humidity control lost.
Wipe off any visible moisture with towel.

Cab press increase due to air heating may cause CAB PRESS RELIEF vlv cycling

C3 2. MSTR MADS PWR – OFF
3. Minimize ltg

FWD 4. All MDU PWR (nine) – OFF
C2 All IDP/CRTs (three) – OFF
F6/F8 √FLT CNTLR PWR (two) – OFF
If FLT CNTLR PWR not reqd:
O14,O15, O16:E 5. cb DDU L,R,AFT (six) – op
L1 6. CAB FAN A,B (two) – OFF
TEMP CNTLR – OFF
7. HUM SEP A,B (two) – OFF
8. Use one PGSC
W1-10 9. Install Window Shades or mnvr to tail Sun att
GNC 201 UNIV PTG
TGT ID – ITEM 8 +4 EXEC
BODY VECT – ITEM 14 +5 EXEC
P – ITEM 15 +1 8 4 EXEC
Y – ITEM 16 +0 EXEC
OM – blank (MCC-provided if reqd)
C3 DAP: A/AUTO/VERN
CRT START TRK – ITEM 19 EXEC (*)
10. Cycle MDUs. If ON at loss of cooling, turn OFF within 30 min. Allow 3 min OFF prior to each 1 min ON (30 min max ON time). Save two MDUs that interface with a single IDP for entry

Cont next page

NOTE

Don QDM for temp > 90 degF and discomfort. If cab temp > 95 degF and no evaporative cooling is sensed, don LES, check tabs, close visor, LES O2 – ON.

Inflate anti-g suit as needed for on-orbit circulatory support.

Begin drinking H2O (one 8-oz container every 15 min with a salt tablet in every other container) and continue through entry

11. Go to LOSS OF 2 CAB FANS (DEORB PREP, CONTINGENCY DELTAS) and perform at next PLS opportunity. Expedite NOMINAL DEORBIT PREP proc if time-to-TIG < 3.5 hr

This Page Intentionally Blank

MS PULLOUT PAGE

MS1 Perform PLB EQUIP PWRDN, 10-6
MS2 Perform MS PWRDN ASAP

MS PWRDN

	1.	Minimize ltg
O14:B	2.	cb MNA EVENT TIMER AFT – op
:C		SMOKE DETN L/R FLT DK – op
O15:B	3.	MNB OI H2O BYP LOOP 2 SNSR – op
		MSN TIMER AFT – op
O16:C	4.	MNC SMOKE DETN CAB – op
L4:J	5.	AC3 ΦA SIG CONDR HUM SEP – op
A6U	6.	ANNUN BUS SEL – OFF
A13	7.	OS AUD SPKR PWR – OFF

NOTE
Galley OVEN/RHS sw should be
OFF unless dispensing H2O

GALLEY	8.	OVEN/RHS – ON, as reqd
		H2O HTRS (two) – OFF
MA73C:G	9.	cb AC3 GALLEY FAN (three) – op
ML86B:B	10.	MNB GALLEY H2O HTR – op
	If CO2 RMVL SYS flown:	
MO51F	11.	CO2 RMVL SYS CNTLR 1(2) MODE – STBY (hold 3 sec)
	If RMS pwrd dn:	
A3	12.	MON 1,2 PWR (two) – OFF
A7U	13.	TV PWR CNTL – PNL
		CONTR UNIT – OFF
	14.	VID OUT MON1,MON2 pb (two) – push (MON1,MON2 lt on)
O19	15.	TV PWR – OFF
R12L	16.	VTR PWR – OFF
MO58F	17.	TV PWR – OFF
	If not reqd:	
R11L	18.	IDP/CRT4 PWR – OFF
		CRT4,AFD1 MDU PWR – OFF
A6U	19.	FLT CNTLR PWR – OFF

PLB EQUIP PWRDN

1. Perform PL SAFING, then:

CAUTION
If stow prob occurs with either RMS and/or KU-BD ANT, perform aff sys QUICK RESPONSE JETTISON (CONT DEORB)

If RMS grappled to OBSS:

2. Perform OBSS JETTISON (PDRS OPS FS, OBSS CONTINGENCY), then:

If RMS-only:

3. Perform RMS PWRDN (PDRS OPS), then:

If KU-BD ANT deployed:

4. Perform KU-BD ANT STOW (ORB OPS, COMM/INST), then:

If radiators deployed:

5. Go to RAD STOW (ORB OPS, ECLS)

LOSS OF 2 H2O LOOPS

NOTES

- THIS PROCEDURE IS TIME CRITICAL
- Proc requires > 45 min, but time critical steps should be done ASAP
- Loss of H2O cooling aff both water and air cooled equipment
- Proc pwrs dn all comm. If comm reqd, preferred comm config in order of heat production:
  1. UHF only
  2. SGLS/STDN LO PWR if reqd
  3. TDRS only if mandatory (10 min max)
- Call ground at every avail UHF site
- Tear out COMM pages from proc and use until touchdown
- Cab depress/repress cycles to 10.2 psia are used for cab temp and humidity control
- If docked to ISS, proc is to be worked simo with JOINT EXPEDITED UNDOCKING AND SEPARATION (SODF: JOINT OPS)
- When pwrdns complete, perform actions on 10-19 and 10-20 as time permits at crew discretion

1. Perform PART 1 of this pwrdn and, based on TIG, complete PART 2 or PART 3

Cont next page

LOSS OF 2 H2O LOOPS, PART 1 – INITIAL PWRDN

TIME CRITICAL PROCEDURES (execute simo)

1. Record MET of 2nd H2O Loop Fail
   __ __ __/__ __:__ __:__ __
2. Establish comm plan with MCC, determine best TIG opportunities, then have MS3 perform COMM PWRDN, 10-23, ASAP (S-Bd Pwr Amp may fail in 10 min with no cooling)
3. Have MS perform MS OVHD PNL PWRDN, 10-19, ASAP
4. Have second MS perform MCA CONFIG, 10-17, and PLB EQUIP PWRDN, 10-17, ASAP
5. If docked to ISS, have CDR perform JOINT EXPEDITED UNDOCKING AND SEPARATION (SODF: JOINT OPS)
6. Have PLT proceed with CDR AND PLT PWRDN, ASAP

DETERMINE MAXIMUM TIME TO TIG, NUMBER OF DEP/REP, FROM N2 QTY FROM SPEC 66. Sel best landing site and deorbit TIG from PGSC. Set Wristwatch Timer (A17) counting down to TIG.

TIG:	_____
TGTS:	
C1	_____
C2	_____
HT	_____
ΘT	_____

Enter TARGETS in LOSS OF 2 H2O LOOPS DEORBIT PREP/ENTRY (CONT DEORB, LOSS OF 2 H2O LOOPS D/O PREP)

IF TOTAL N2	NUMBER OF DEP/REP	SEL BEST TIG WITHIN
>160 LB	3	45M - 4H:00M
>120 LB	2	45M - 2H:50M

CDR AND PLT PWRDN

O14,O15, O16:F	7.	√Pri RJD LOGIC,DRIVER (sixteen) – ON
		DAP: ALT (proc results in loss of VERNs)
O16:F		RJD MANF L5/F5/R5 DRIVER – OFF
C3	8.	√MSTR MADS PWR – OFF
	9.	Minimize ltg
	10.	Use only one IDP with two MDUs, one PGSC

NOTE

Cycle MDUs. If ON at loss of cooling, turn OFF within 30 min. Allow 2 min OFF prior to each 1 min ON (30 min max ON time). Save two MDUs that interface with a single IDP for entry. IDPs do not require cycling

Cont next page

F6,F8,A6 11. FLT CNTLR PWR (three) – OFF, use one as reqd
O7 12. GPS PWR (three) – OFF
O8 13. √RDR ALTM (two) – OFF
14. √MLS (three) – OFF
L1 15. √H2O PUMP LOOP 1,2 (two) – OFF
(leave ON if any loop running)
HUM SEP (two) – OFF
(leave HUM SEP A ON if any loop running)

If any loop running, minimize bypass:

16. H2O LOOP 1(2) BYP MODE – MAN
MAN – DECR (30 sec)

If H2O PUMP LOOP 1 A(B) ON, inform MS:

MA73C:A 17. √MCA LOGIC MNA FWD 1 – ON
(MNB FWD 2 – ON)
L1 18. CAB FAN (two) – OFF
TEMP CNTLR – OFF
19. √FLOW PROP VLV LOOP tb (two) – ICH
20. FREON PUMP LOOP 1 – OFF
√2 – B
21. HI LOAD DUCT HTR sel – A/B
√TOP EVAP HTR NOZ L,R (two) – B AUTO(A AUTO)
√DUCT sel – B(A)
L2 22. O2 SYS 1 SPLY – CL (tb-CL)
L4:J 23. cb AC3 ΦA SIG CONDR HUM SEP – op

If not currently single G2, reassign strings to GPC 1 in MC 2:

24. GNC 0 GPC MEMORY
CONFIG – ITEM 1 +2 EXEC
Modify MC 2 per table – – – – ►

CONFIG GPC		2 10000
STR	1	1
	2	1
	3	1
	4	1
PL	1/2	0
CRT	1	1
	2	1
	3	0
	4	1
L	1	0
	2	0
MM	1	1
	2	1

CRT 25. GNC, OPS 201 PRO
O6 26. GPC MODE 2 – STBY
(tb-bp)
– HALT
– STBY
(tb-RUN)
– HALT
(tb-bp)
27. √GPC MODE 3,5 (two) – HALT
√OUTPUT 5 – NORM
L1 28. AV BAY 1 FAN A – ON
B – OFF
2,3 FAN A,B (four) – OFF
29. IMU FAN A – ON
B – OFF
√C – OFF

For any fwd IDP/CRT that is OFF:

30. GPC/CRT1/X EXEC
R2 31. HYD CIRC PUMP (three) – ON

Cont next page

C3 32. C/W MODE – ACK

NOTE
For F7 lights, hold in F2 or F4 MA

If current time to TIG < 50 min:
33. Go to LOSS OF 2 H2O LOOPS, PART 2 – SHORT ON-ORBIT WAIT, next page >>

L1 34. Cycle CAB FAN A(B) – ON (7 min)/OFF (1 hr) (to control PPCO2)
L4:P 35. cb AC2,3 ΦA LG SNSR (two) – op

WARNING
Do not unpwr all IMU/FF MDM's pairs

If IMU 2 in OPER:
36. GNC 21 IMU ALIGN
IMU 1,3 (two) – desel
O14,O16:A 37. IMU 1,3 (two) – OFF
If IMU 2 in STBY:
38. GNC 21 IMU ALIGN
IMU 2,3 (two) – desel
O15,O16:A 39. IMU 2,3 (two) – OFF
O6 40. MDM FF3,FF4 (two) – OFF
41. Verify MS OVHD PWRDN complete

NOTE
Both MMUs are OFF. If a ROLL-IN DISPLAY is reqd: turn MMU 1 ON, try transaction, turn MMU 1 OFF again

If time from failure to TIG < 2 hr 30 min:
42. Go to LOSS OF 2 H2O LOOPS, PART 2 – SHORT ON-ORBIT WAIT, next page >>
If time from failure to TIG > 2 hr 30 min:
43. Go to LOSS OF 2 H2O LOOPS, PART 3 – EXTENDED ON-ORBIT WAIT, 10-13

LOSS OF 2 H2O LOOPS, PART 2 – SHORT ON-ORBIT WAIT

If Undocking from ISS, delay step 1 until after Undocking and Post Final Sep, but continue with steps 2 through 19 of PART 2 – SHORT ON-ORBIT WAIT:

1. Perform POST UNDOCKING AND FINAL SEP RECONFIG, 10-15

BYPASS RADS/FES ACT

ML86B:A 2. cb MNC SPLY H2O XOVR VLV – cl

R11L 3. SPLY H2O XOVR VLV – OP (tb-OP)
√TKA OUTLET – CL (tb-CL)

L1 4. FLASH EVAP CNTLR (three) – OFF

5. HI LOAD EVAP – ENA
RAD BYP VLV MODE 1,2 (two) – MAN
MAN SEL 1,2 (two) – BYP,
wait 3 sec (tb-BYP)
CNTLR LOOP 1,2 (two) – OFF

When EVAP OUT T > 65:

6. FLASH EVAP CNTLR PRI A(B) – ON
7. Wait 1 min, verify EVAP OUT T = 39 degF
8. Give MS GO to perform PLBD CLOSURE, 10-18

If current time to TIG < 50 min, at TIG-30 min:

9. Go to LOSS OF 2 H2O LOOPS DEORBIT PREP/ENTRY (CONT DEORB, LOSS OF 2 H2O LOOPS D/O PREP) >>

NOTE

Limit operation of each GPC (1 hr max ON time from second H2O Loop failure)

If reqd, perform steps 10 thru 13:

O6 10. GPC MODE 2 – STBY (tb-RUN), hands off 10 sec
– RUN (OUTPUT tb-gray), hands off 10 sec

IDPX 11. In MCX add GPC 2 to tgt set (leave GPC 1 in tgt set)
Assign all strings to GPC2
(if SM GPC active, √PL 1/2 not assigned)
GNC, OPS X01 PRO
√All IDPs deassigned from GPC1

O6 12. GPC MODE 1 – STBY (tb-bp)
– HALT
– STBY (tb-RUN)
– HALT (tb-bp)

L1 13. AV BAY 1 FAN A(B) – OFF
2 FAN A(B) – ON

Wherever GPC 1 is referenced, replace with GPC 2 in the LOSS OF 2 H2O LOOPS DEORBIT PREP/ENTRY (CONT DEORB, LOSS OF 2 H2O LOOPS D/O PREP)

Cont next page

SM GPC/PL MDM Deact – Delay SM GPC/PL MDM Deact (steps 14-21) until PLBD are closed. Then perform ASAP:

14. SM 1 DPS UTILITY
    UL CNTL ENA – ITEM 36 EXEC
C3 15. UPLK – GPC BLK
C2 16. IDP/CRT1,2,3 MAJ FUNC (three) – GNC
O6 17. GPC MODE 4 – STBY (tb-bp)
    – HALT
    PWR 4 – OFF
18. GNC 0 GPC MEMORY
    CONFIG – ITEM 1 +2 EXEC
19. Assign PL1/2 to GPC 1 in MC2
CRT 20. GNC, OPS 201 PRO
O6 21. MDM PL1,PL2 (two) – OFF

22. Perform first cab depress/repress cycle starting at approx 1 hr 15 min after the failure, the final cycle at TIG-20 min. Procs in the 20 MINUTE DE/REPRESS MS PULLOUT PAGE (CONT DEORB, LOSS OF 2 H2O LOOPS); use until last depress/repress is complete

NOTE

Possible cab air OVBD RLF due to loss of cab cooling.

Use Quick Don mask as needed to provide additional respirator cooling during periods of high cab temp and humidity. To determine health of crewmember, place temp strip (MED Kit) on forehead. If any crewmember temp greater than 99 degF and crew feels ill, begin cab depress/repress cycle ASAP

At TIG-30 min:

23. Go to LOSS OF 2 H2O LOOPS DEORBIT PREP/ENTRY (CONT DEORB, LOSS OF 2 H2O LOOPS D/O PREP) >>

LOSS OF 2 H2O LOOPS, PART 3 – EXTENDED ON-ORBIT WAIT

If Undocking from ISS, delay step 1 until after undocking and Post Final Sep, but continue with steps 2 thru 6:

1. Perform POST UNDOCKING AND FINAL SEP RECONFIG, 10-15

O6 2. √GPC MODE 2,3,5 (three) – HALT
3. PWR 2,3,5 (three) – OFF

When RMS PWRDN (PDRS OPS) complete, perform steps 4 thru 6 ASAP:

4. GPC MODE 4 – STBY (tb-bp), hands off 10 sec
– RUN (tb-RUN), hands off 10 sec
OUTPUT 4 – NORM (tb-gray)
5. GNC 0 GPC MEMORY
CONFIG – ITEM 1 +2 EXEC

Modify MC 2 per table – – – → GNC, OPS 201 PRO

CONFIG GPC		2 10040
STR	1	1
	2	1
	3	1
	4	1
PL	1/2	1
CRT	1	1
	2	1
	3	1
	4	0
L	1	0
	2	0
MM	1	1
	2	1

O6 6. GPC MODE 4 – STBY (tb-bp)
– HALT
– STBY (tb-RUN)
– HALT (tb-bp)
PWR 4 – OFF

Delay steps 7 thru 20 of PART 3 – EXTENDED ON-ORBIT WAIT, 10-14, until POST UNDOCKING AND FINAL SEP RECONFIG is complete (perform step 19 as reqd):

Cont next page

Establish free drift:

F8 7. Verify att mnvr complete
ADI ATT – INRTL
C3 DAP: B/AUTO/PRI (wait 30 sec)
FREE
O6 8. MDM PL1,PL2 (two) – OFF
9. √Wrist watch set to MET

Pwr dn remaining GPC:

10. GNC, OPS 000 PRO
11. GPC MODE 1 – STBY (tb-bp)
– HALT
– STBY (tb-RUN)
– HALT (tb-bp)
12. GPC PWR 1 – OFF

FWD,AFT 13. All MDU PWR (eleven) – OFF
C2,R11L IDP/CRT PWR (four) – OFF
L1 14. AV BAY FAN (six) – OFF
O13:C 15. cb ESS 2CA MTU B – op
:E 3AB GPC STAT – op
O14:B 16. MNA MSN TIMER FWD – op
:C SMOKE DETN L/R FLT DK – op

W1-10 17. Install Window Shades
18. Check all pwrdns complete

19. Perform first cab depress/repress cycle starting at approx 1 hr 15 min after the failure, the second at TIG-1:15 and the final cycle at TIG-20 min. Procs in the 20 MINUTE DE/REPRESS MS PULLOUT PAGE (CONT DEORB, LOSS OF 2 H2O LOOPS); use until last depress/repress is complete

NOTE

Possible cab air OVBD RLF due to loss of cab cooling.

Use QDM as needed to provide additional respirator cooling during periods of high cab temp and humidity. To determine health of crewmember, place temp strip (MED Kit) on forehead of CDR and PLT

20. Go to LOSS OF 2 H2O LOOPS, ON-ORBIT WAIT (CONT DEORB, LOSS OF 2 H2O LOOPS)

POST UNDOCKING AND FINAL SEP RECONFIG

If Undocking with ISS and Final Sep complete or if not docked with ISS:

1. GNC 20 DAP CONFIG
   DAP A,B set to A1,B1 except:
   (A) ITEM 10 +1.0 0 EXEC
   ITEM 11 +3.0 0 EXEC
   ITEM 15 EXEC (TAIL)
   ITEM 16 EXEC (TAIL)
   (B) ITEM 30 +0.2 0 EXEC
   ITEM 31 +1.0 0 EXEC
   ITEM 35 EXEC (TAIL)
   ITEM 36 EXEC (TAIL)

   CAUTION
   DO NOT mnvr on PRCS until MS has completed RMS JETT or STOW

2. Mnvr to tail Sun att:
   GNC 201 UNIV PTG
   TGT ID – ITEM 8 +4 EXEC
   BODY VECT – ITEM 14 +5 EXEC
   P – ITEM 15 +2 2 5 EXEC
   Y – ITEM 16 +0 EXEC
   OM – blank (MCC-provided as reqd)
   DAP: A/AUTO/PRI
   START TRK – ITEM 19 EXEC (CUR-*)

   If IMU 2 in OPER:
   O6 3. MDM FF1 – OFF
   If IMU 2 in STBY:
   O6 4. MDM FF2 – OFF
   O14,O15, O16:F 5. RJDF LOGIC,DRIVER (eight) – OFF

   NOTE
   Expect FRCS jet(s) to false fail leak when OF DSC cbs are opened

   O14:B 6. cb MNA OI SIG CONDR OF 1/4 A – op
   O15:B 7. cb MNB OI SIG CONDR OF 1/4 B – op
   2/3 A – op
   O16:B 8. cb MNC OI SIG CONDR OF 2/3 B – op
   O16:E 9. DDU AFT – op

This Page Intentionally Blank

MCA CONFIG (Execute ASAP)

L1 If either H2O PUMP LOOP 1 A(B) – ON:

MA73C:A 1. Leave MCA LOGIC MNA FWD 1(MNB FWD 2) ON in next step

> CAUTION
> Coordinate steps 2 and 3 with CDR. FRCS is lost with step 2 and recovered with step 3

MA73C:A, B 2. MCA LOGIC MNA,B,C (fourteen) – OFF

3. GNC 23 RCS
   ITEM 1 EXEC (FRCS page)
   OVRD FRCS MANF(s) – OP

4. For PLB EQUIP PWRDN, use following MCA config:
   MCA LOGIC MNA MID 1,3 (two) – ON
   MNB MID 2,3,4 (three) – ON
   MNC MID 2,4 (two) – ON

> CAUTION
> Retain this MCA sw config until step 8 of the PLB EQUIP PWRDN. Disregard MCA sw throws in the PL SAFING, RAD STOW, KU-BD ANT STOW, and RMS PWRDN procs

MO13Q 5. √AIRLK FAN A,B (two) – OFF

PLB EQUIP PWRDN (Execute ASAP)

1. Perform PL SAFING, then:

> CAUTION
> If stow prob occurs with either RMS and/or KU-BD ANT, perform aff sys QUICK RESPONSE JETTISON (CONT DEORB)

2. If TV reqd for OBSS jettison or RMS/Ku stow, perform ACTIVATION and OPERATION (Auto Ops only) (Cue Card, TV)

If RMS grappled to OBSS:

3. Perform OBSS JETTISON (PDRS OPS FS, OBSS CONTINGENCY), then:

If RMS-only:

4. Perform RMS PWRDN (PDRS OPS), then:

Cont next page

If KU-BD ANT deployed:

5. Perform KU-BD ANT STOW (ORB OPS, COMM/INST), then:

If radiators deployed:

6. Perform RAD STOW (ORB OPS, ECLS), then:

7. Notify CDR: RMS stowed(jettisoned)

If performing PART 2 – SHORT ON-ORBIT WAIT:

8. Perform PLBD CLOSURE, below, on GO from CDR, then:

MA73C:A, B 9. MCA LOGIC MNA MID 1,3 (two) – OFF
MNB MID 2,3,4 (three) – OFF
MNC MID 2,4 (two) – OFF

PLBD CLOSURE (Short On-Orbit Wait only)

> WARNING
> Verify no obstructions before closing and latching PLBD (Ku ANT, RAD, RMS, etc)

1. Notify CDR: Beginning PLBD CLOSURE

O6 2. √MDM PL1,PL2 (two) – ON

3. SM I/O RESET

CRT4 4. SM, OPS 202 PRO – close PLBD ASAP

5. SM PL BAY DOORS

R13L PL BAY DR SYS (two) – ENA

CRT4 6. AC POWER ON – ITEM 1 EXEC
AUTO MODE SEL – ITEM 3 EXEC
PBD SW BYPASS – ITEM 14 EXEC
CLOSE – ITEM 17 EXEC

If 'PLB SEQ FAIL' msg during door closure and aft latches for
: that door are not 'CL':
: 7. Check door scallop on or below tgt line before
: continuing in MAN mode; otherwise:
: 8. Perform MAL, MECH SSR-2,
L CONTINGENCY PLBD CLOSURE, then:

After PLBD closed:

CRT4 9. PBD STOP – ITEM 16 EXEC
AC POWER OFF – ITEM 2 EXEC

R13L 10. PL BAY DR SYS (two) – DSBL
GPC/CRT 0/4 EXEC

R11L 11. IDP/CRT4 PWR – OFF

A7U 12. √PL BAY FLOOD (all) – OFF

If either H2O PUMP LOOP 1 A(B) – ON:

MA73C:A 13. Leave MCA LOGIC MNA FWD 1 (MNB FWD 2) – ON in next step

MA73C 14. MCA LOGIC MNA,B,C (fourteen) – OFF

15. Notify CDR: PLBDs closed

MS OVHD PNL PWRDN

1. Set wrist watches as accurately as possible to MET (set one to GMT). The MET may be used for deorbit burn execution. Record GMT day of year
   __ __ __/__ __:__ __:__ __
2. Minimize ltg on Aft Flt Deck

O13:A 3. cb ESS 1BC MTU A – op
:C 2CA C/W B – op
O14:A 4. √BRAKES MNA – OFF
:B 5. cb MNA OI H2O BYP LOOP 1 SNSR – op
EVENT TIMER AFT – op
:E √ADTA 1 – op
DDU L,AFT (two) – op
O15:A 6. √BRAKES MNB – OFF
:B 7. cb MNB OI H2O BYP LOOP 2 SNSR – op
MSN TIMER AFT – op
EVENT TIMER FWD – op
:E √ADTA 2 – op
DDU L,R (two) – op
:F 8. MMU 2 – OFF
O16:A 9. √BRAKES MNC – OFF
:E 10. √cb MNC ADTA 3,4 (two) – op
DDU R – op

When N2 QTY and TIG determined by CDR:

O14:B 11. cb MNA OI MDM OF 1/2 A,3/4 A (two) – op
O15:B MNB OI MDM OF 1/2 B – op
O16:B MNC OI MDM OF 3/4 B – op
O14:F MMU 1 – OFF

12. Notify CDR: MS OVHD PNL PWRDN complete
13. Assist other MS with completion of PLB EQUIP PWRDN, 10-17

When pwrdns complete, perform following at crew discretion:

FLUID LOADING PREP

GALLEY
1. OVEN/RHS – ON
2. Unstow, fill 4 water containers (per crewmember) with 8 oz of water each. Temp stow near seat
3. Unstow 8 salt tablets (per crewmember). Temp stow in Flt Suit pocket
4. OVEN/RHS – OFF
5. √H2O HTRS (two) – OFF
6. √OVEN FAN – OFF
7. Stow Personal Hygiene Hose

NOTE

Ensure sufficient containers and salt tablets are prepared to continue fluid loading thru entry

FLUID LOADING

1. Immed begin drinking H2O (one 8-oz container every 15 min with a salt tablet in every other container) and continue through entry

CLOTHING CONFIG

1. Don QDM for temp > 90 degF and discomfort

FDF CONFIG

1. Unstow: ENT, ENT PKT, Deorb Burn Cards, ENT Cue Cards

CAB CONFIG

1. Stow loose equipment, Backup PGSC
2. Remove and stow side hatch UV filter, locking device, and pyro box safing pin
3. Tape foot loops in egress routes
4. Remove and stow Window Shades (if not needed for cab T control)

WCS DEACT

WCS 1. Foot Restraints – up, locked
ML31C 2. √VAC VENT ISOL VLV CNTL – OP (tb-OP)
If EDO WCS:
WCS 3. URINAL SEL – OFF
4. WCS PWR SEL (two) – OFF1,OFF2
5. FAN PWR – AUTO

INSTALL SEATS

POLE SETUP

1. ESCAPE POLE SETUP:
   Reinstall Stbd pip pin and Large Port pin
   Retract and hold Locking Pin(Ring)
   Reinstall Large pin
   Release Locking Pin(Ring)
   Slide forward Safing latch
   Verify pole straps secure
2. Check minimum ltg on Middeck

This Page Intentionally Blank

NOTE
KEEP THIS PAGE UNTIL TOUCHDOWN

MS After comm plan established with MCC, perform COMM PWRDN ASAP (delay 10 min max)

CAUTION
Must complete steps 1 thru 3 within 10 min. TDRS or STDN – HI AOS is limited to 10 min or power amp will overheat

NOTE
Proc pwrs off ALL ground comm

COMM PWRDN

A1L 1. S-BD PM ANT SW ELEC – OFF
PRE AMP – OFF
PWR AMPL STBY – OFF
OPER – OFF
MODE sel – STDN LO
XPNDR – OFF

2. NSP PWR – OFF
ENCRYPTION PWR – OFF
(Encrypt OFF rest of flt)
MODE – SEL
SEL – BYP

NOTE
Verify CDR ready for COMM PWRDN prior to performing step 3

C3 3. S-BD PM CNTL – PNL

NOTE
Ensure CDR has recorded N2 quantities before powering down PCMMU. Other steps may be performed

4. OI PCMMU PWR – OFF
FORMAT – FXD

5. AUD CTR – OFF (turn ON as reqd for ICOM audio)

NOTE

KEEP THIS PAGE UNTIL TOUCHDOWN

O5	6.	L AUD PWR – OFF (turn ON as reqd for ICOM audio)
O6	7.	UHF MODE sel – OFF
O9	8.	R AUD PWR – OFF (turn ON as reqd for ICOM audio)
A1L	9.	√S-BD PL CNTL – PNL
		√PWR SYS – OFF
	10.	PL DATA INTLVR PWR – OFF
A1R	11.	S-BD FM CNTL – PNL
		PWR – OFF
A3	12.	MON 1,2 PWR (two) – OFF
A7U	13.	TV PWR CONTR UNIT – OFF
R14:B	14.	cb MNA,MNC GCILC (two) – op
:D		TV (fourteen) – op
		MNB VPU – op
:E		CAMR (six) – op
L9,R10	15.	PS,MS AUD PWR (two) – OFF
A13	16.	OS AUD SPKR PWR – OFF
MO42F	17.	MIDDECK SPKR AUD SPKR PWR – OFF
	18.	Call ground at every avail UHF site per COMM POWERUP, 10-25; voice down cab temp, crew body temps, heart rates, and words to indicate severity of cab humidity

If MCC request data on cab environ or Av bays:

19. Perform CABIN ENVIRONMENT MONITOR (CONT DEORB, LOSS OF 2 H2O LOOPS), then:

If after TIG-10 min:

20. Perform AFT PNL CONFIG FOR ENTRY COMM (CONT DEORB, LOSS OF 2 H2O LOOPS D/O PREP)

NOTE
KEEP THIS PAGE UNTIL TOUCHDOWN

COMM POWERUP (If comm reqd prior to landing site coverage)

```
            Pwr up audio sys:
C3              1.    AUD CTR – 1
O5                    L AUD PWR – AUD
O9                    R AUD PWR – AUD
            If UHF avail, config for UHF comm (voice only):
O6          |   2.    UHF MODE sel – SPLX
            |             √SPLX/EVA PWR AMPL – ON
            |   3.    After comm with MCC complete:  Go to COMM
            |         PWRDN, steps 5 thru 8, 10-23  >>
            If UHF site unavail or if MCC requests data
            |  (config for GSTDN(SGLS) S-BD):
C3          |   4.   √S-BD PM CNTL – PNL
A1L         |                ANT SW ELEC – 2
            |                MODE sel – STDN LO(SGLS)
            |                XPNDR – 2
            |   5.    NSP PWR – 2
            |             √DATA RATE XMIT – HI
            |                        √RCV – HI
            |           CODING XMIT – OFF
            |                     RCV – OFF
            |             √UPLK DATA – S-BD
C3/F9       |   6.    Sel best S-BD PM ANT
            |   If MCC requests data:
O15:B       |   :   7.    cb MNB OI SIG CONDR OF 1/4 B,2/3 A
            |   :                                   (two) – cl
O14:B       |   :   8.    cb MNA OI MDM OF 1/2 A,3/4 A (two) – cl
C3          |   :   9.    OI PCMMU PWR – 1
O6          |   :   10.   MDM PL2 – ON
            |   :   11.   BFS, GNC I/O RESET
            |   :   At end of data transmission:
O14:B       |   :       12.   cb MNA OI MDM OF 1/2 A,3/4 A (two) – op
O15:B       |   :       13.   cb MNB OI SIG CONDR OF 1/4 B,2/3 A
            |   :                                       (two) – op
            |   :       If not reqd for PLBD CLOSURE:
O6          |   :           14.   MDM PL2 – OFF
            |   :   After comm/data complete:
            |   L       15.   Go to COMM PWRDN, 10-23  >>
            ~
```

Cont next page

NOTE
KEEP THIS PAGE UNTIL TOUCHDOWN

~
|
If UHF site and GSTDN unavail and comm/data critical:
Config for TDRS S-BD during AOS

> CAUTION
> This is a High Power Mode. On-time should be limited to 10 min max due to Pwr Amp Thermal constraints. A 3-min delay occurs before Pwr Amp comes on. Uplink not aff. Proceed with sel of best S-BD PM ANT

C3 16. √S-BD PM CNTL – PNL
A1L ANT SW ELEC – 2
PRE AMP – 2
PWR AMPL OPER – 2
MODE sel – TDRS DATA
XPNDR – 2
17. NSP PWR – 2
√DATA RATE XMIT – HI
√RCV – HI
CODING XMIT – ON
RCV – ON
√UPLK DATA – S-BD
C3/F9 18. Sel best S-BD PM ANT
If MCC requests data:
O15:B : 19. cb MNB OI SIG CONDR OF 1/4 B,2/3 A
: (two) – cl
O14:B : 20. cb MNA OI MDM OF 1/2 A,3/4 A (two) – cl
C3 : 21. OI PCMMU PWR – 1
O6 : 22. MDM PL2 – ON
: 23. BFS, GNC I/O RESET
: At end of data transmission:
O15:B : 24. cb MNB OI SIG CONDR OF 1/4 B,2/3 A
: (two) – op
O14:B : 25. cb MNA OI MDM OF 1/2 A,3/4 A (two) – op
: If not reqd for PLBD CLOSURE:
O6 L 26. MDM PL2 – OFF
After comm/data complete:
27. Go to COMM PWRDN, 10-23

LOSS OF CAB PRESS

CDR — Perform JOINT EXPEDITED UNDOCKING AND SEPARATION (SODF: JOINT OPS)
MS1,MS2 — Perform procs on 10-30
PLT — Perform following pwrdn

NOTE

Cab press will stabilize at 8 psia for following EQ dP/dT values:
< 0.6 for Orbiter + Airlock
< 0.4 for Orbiter + Airlock + Spacehab.

If docked to ISS, undocking will be performed with Single G2 (i.e., no +Z redundancy)

C3
1. MSTR MADS PWR – OFF
2. Minimize ltg
3. Use one IDP/CRT with two MDUs, as reqd (IDP4 preferable)
4. Use one PGSC, FLT CNTLR PWR as reqd

If FLT CNTLR PWR not reqd:

O14,O15, O16:E
5. cb DDU L,R,AFT (six) – op

O7
6. √GPS 1,3 PWR (two) – OFF

O8
7. √MLS (three) – OFF
√RDR ALTM (two) – OFF

L1
8. CAB TEMP CNTLR – OFF
9. HUM SEP (two) – OFF
10. H2O LOOP 2(1) BYP MODE – MAN
MAN – DECR (30 sec)
11. √FLOW PROP VLV LOOP tb (two) – ICH

If FES not ena:
: If EVAP OUT T 41 to 47 degF:
: | 12. RAD CNTLR OUT TEMP – HI
: | When EVAP OUT T > 50 degF:
: | 13. FLASH EVAP CNTLR PRI A(B) – ON, then immed:
: | 14. RAD CNTLR OUT TEMP – NORM
: If EVAP OUT T < 41 or > 47 degF:
L 15. FLASH EVAP CNTLR PRI A(B) – ON

L2
16. √ANTISKID – OFF
√NWS – OFF

L4:L
17. cb ΦA CAB T CNTLR 1,2 (two) – op

Cont next page

If orbit 2,3 deorbit due to cab leak:

18. Use DEORB PREP/ENTRY DELTAS PULLOUT PAGE, 10-31, then go to LAUNCH DAY DEORBIT PREP (ORBIT 2(3)) (CONT DEORB, LAUNCH DAY ORBIT 2(3)) >>

If orbit 3 deorbit due to fire, tox spill, or glass in cabin:

19. Go to LAUNCH DAY DEORBIT PREP (ORBIT 3) (CONT DEORB, LAUNCH DAY ORBIT 3) >>

W1-10 20. Install Window Shades (ten) or mnvr to tail Sun att:

GNC UNIV PTG

	TGT ID	– ITEM 8 +4 EXEC
	BODY VECT	– ITEM 14 +5 EXEC
	P	– ITEM 15 +1 8 4 EXEC
	Y	– ITEM 16 +0 EXEC
	OM	– blank (MCC-provided if reqd)
C3	DAP: A/AUTO/VERN	
CRT	START TRK – ITEM 19 EXEC	

If time to TIG < 4 hr:

21. Go to 8 PSI DEORBIT PREP (DEORB PREP, CONTINGENCY DELTAS) >>

If time to TIG > 4 hr:

If currently in single G2 GPC OPS:

22. Perform G2 SET EXPANSION, target Dual G2 (ORB OPS, DPS), then:

Cont next page

REASSIGN STRINGS TO GPC 2 IN MC 2

NOTE

If Av Bay 2 fire and TIG > 4 hr:
Reassign strings to GPC in unaffected Av Bay

23. GNC 0 GPC MEMORY
    CONFIG – ITEM 1 +2 EXEC
    Modify MC 2 per table – – – – →
    DOWNLIST GPC –
    ITEM 44 +2 EXEC

CRT 24. GNC, OPS 201 PRO

O6 25. GPC MODE 1(3) – STBY
– HALT
– STBY
(tb-RUN)
– HALT
(tb-bp)
PWR 1(3) – OFF
√MODE 3,5 (two) –
HALT (tb-bp)

CONFIG GPC		2 02000
STR	1	2
	2	2
	3	2
	4	2
PL	1/2	0
CRT	1	2
	2	2
	3	0
	4	2
L	1	0
	2	0
MM	1	2
	2	2

26. Go to 8 PSI DEORBIT PREP (DEORB PREP, CONTINGENCY DELTAS)

MS PWRDN

CDR,MS1 Perform PLB EQUIP PWRDN (below)
MS2 Perform remaining pwrdn

O14,O15, O16:E 1. cb ADTA (four) – op
O16:E 2. cb MNC RCS/OMS PRPLT QTY GAUGE – op
If TIG > 2 hr 40 min:
O14:B 3. cb MNA EVENT TIMER AFT – op
O15:B 4. MNB MSN TIMER AFT – op
A7U 5. TV PWR CNTL – PNL
CONTR UNIT – OFF
A13 6. OS AUD SPKR PWR – OFF
L9 7. PS AUD PWR – OFF
MO42F 8. MIDDECK SPKR AUD SPKR PWR – OFF
MO58F 9. TV PWR – OFF
When RMS pwrd dn:
A3 10. MON PWR (two) – OFF
R14:E 11. cb CAMR (six) – op
MD44F 12. Cab temp cntl act link – pin to FULL COOL, stow linkage >>

PLB EQUIP PWRDN

13. If orbit 2,3 deorbit >>
14. Perform PL SAFING, then:

CAUTION
If stow prob occurs with either RMS and/or KU-BD ANT, perform aff sys QUICK RESPONSE JETTISON (CONT DEORB)

If RMS grappled to OBSS:
15. Perform OBSS JETTISON (PDRS OPS FS, OBSS CONTINGENCY), then:
If RMS-only:
16. Perform RMS PWRDN (PDRS OPS), then:
If KU-BD ANT deployed:
17. Perform KU-BD ANT STOW (ORB OPS, COMM/INST), then:
If radiators deployed:
18. Go to RAD STOW (ORB OPS, ECLS)

DEORB PREP/ENTRY DELTAS PULLOUT PAGE

NOTE

Incorporate following changes or remove this page for use with the indicated checklist or cue card.

Single fault tolerance used for most cab air-cooled equipment. Add'l LRUs may be activated if reqd and if CAB PRESS stable ≥ 8 psia

A. Deltas to the LAUNCH DAY ORBIT 2(3) (CONT DEORB)

1. Minimize use of IDPs, MDUs, FLT CNTLR PWR, DDUs. Use one PGSC

If rev 3:

2. ENT FWD FLT DECK CONFIG 10
   Do not pwr MLS
3. In ENT SW LIST/VER, do not activate pwrdn items

B. Deltas to DEORBIT BURN (ENT)

At TIG-4:

1. Use two IDP/CRTs with four MDUs as reqd for deorbit burn
2. O14,O15, O16:E — cb DDU L,R (four) – cl
3. F6,F8 — L,R FLT CNTLR PWR (two) – ON

C. Deltas to POST BURN (ENT)

1. Use one IDP/CRT with two MDUs as reqd
2. F6,F8 — L,R FLT CNTLR PWR (two) – OFF
3. O14,O15, O16:E — cb DDU L,R,AFT (six) – op
4. Delete ANTISKID, NWS callouts (ENTRY SW CHECK)

At EI-15:

5. O7 — GPS 3 PWR – ON
   PRE AMPL (two) – ON
   Wait 30 sec
   GNC I/O RESET
   GNC 55 GPS STATUS
   INIT – ITEM 16 EXEC
   NAV – ITEM 19 EXEC

Cont next page

D. Deltas to ENTRY MANEUVERS (Cue Card)

At EI:

1. Use two IDP/CRTs with four MDUs as reqd

O14,O15, O16:E 2. cb DDU L,R (four) – cl

F6,F8 3. L,R FLT CNTLR PWR (two) – ON

O14,O15, O16:E 4. cb ADTA 1,2,3 (three) – cl

5. BFS, GNC I/O RESET

At V = 15K:

If CAB P < 8 psia:

6. Delete NAVAIDS callout

If CAB P ≥ 8 psia:

7. Activate all RAs, MLSs
   GNC I/O RESET
   At M < 1.0, go to step 10

At M = 2.7:

8. Use two HUDs, MLSs, and RAs as reqd
9. GNC I/O RESET

At M < 1.0:

L2 10. ANTISKID – ON
11. NWS – 1

LOSS OF HI LOAD EVAP

NOTE

MAL, ECLS SSR-2, FES CORE FLUSH PROCEDURE should be performed if core icing is suspected. If unsuccessful, perform pwrdn prior to RAD BYPASS at TIG-2:50 during deorb prep. If already in deorb prep, perform pwrdn and review activities already performed for changes

C3 1. √MSTR MADS PWR – OFF
2. Minimize ltg
3. Use one IDP/CRT with two MDUs, one FLT CNTLR PWR, and one PGSC as reqd
4. Perform PL PWRDN, then:

If not in deorb prep:

O7 5. √GPS 1,3 PWR (two) – OFF
√PRE AMPL (four) – OFF

O8 6. √RDR ALTM (two) – OFF
7. √MLS (three) – OFF

L1 8. √FLOW PROP VLV LOOP tb (two) – ICH
9. √HI LOAD DUCT HTR sel – OFF

A3 10. TV MON (two) – OFF

If FLT CNTLR PWR not reqd:

O14,O15, O16:E 11. cb DDU L,R,AFT (six) – op

12. Reset EVAP OUT T C&W upper limit (ch 107,117) to 2.15V (70 degF). Change B/U C&W parameter, 0631207, 0631407 upper limit to 70

A. Deltas to NOMINAL DEORBIT PREP (DEORB PREP) if not already performed

At TIG-03:00, prior to RAD BYP:

L1 1. H2O LOOP 2(1) BYP MODE – MAN
MAN – DECR (hold 30 sec)
FLASH EVAP CNTLR PRI A – OFF
B – OFF
SEC – ON
√HI LOAD EVAP – OFF
Perform RAD BYPASS/FES C/O (ORB OPS, ECLS):
Delete steps 3 and 5 thru 8 (SEC FES C/O)

At TIG-03:15 in DED DISP ENT CONFIG:

2. Do not pwr NAV/LDG AIDS, ADTAs
Pwr DDUs, MDUs only as reqd

Cont next page

At TIG-01:50, ENT SWITCH LIST/VERIF:

3. Do not pwr NAVAIDS, ADTAs
   Delete BRAKE/ANTISKID ACT
4. Go to LOSS OF HI LOAD EVAP DEORB OR ENTRY PULLOUT PAGE (ENT PKT, PWRDN)

B. Deltas to DEORBIT BURN (ENT)

At TIG-10:

O14,O15, O16:E
1. cb DDU L,R (four) – cl
2. Use two IDP/CRTs with four MDUs, and two FLT CNTLR PWR for burn

At TIG-5:

L1
3. TOP EVAP HTR NOZ (two) – OFF
   DUCT sel – OFF

C. Deltas to POST BURN (ENT)

F6,F8
1. L,R FLT CNTLR PWR (two) – OFF

O14,O15, O16:E
2. cb DDU L,R (four) – op (save for entry)
3. Use one IDP/CRT with two MDUs
4. Delete ANTISKID, NWS callouts (ENTRY SW CHECK)

D. Deltas to ENTRY MANEUVERS (Cue Card)

At EI:

O14,O15, O16:E
1. cb DDU L,R (four) – cl

F6
2. L FLT CNTLR PWR – ON
3. Use two IDP/CRTs with four MDUs

O14,O15, O16:A
4. BRAKES (three) – ON

O14,O15, O16:E
5. cb ADTA 1,2,3 (three) – cl
6. GNC I/O RESET

L2
7. NWS – 1
8. ANTISKID – ON

At M = 2.7:

9. Use two HUDs, MLSs, and RAs
10. GNC I/O RESET

LOSS OF 1 FREON LOOP

MS Perform MS PWRDN, 10-36

C3
1. MSTR MADS PWR – OFF
2. Minimize ltg
3. Use one IDP/CRT with two MDUs as reqd, and one PGSC

If FLT CNTLR PWR not reqd:

O14,O15, O16:E
4. cb DDU L,R,AFT (six) – op

5. If reqd, perform PL PWRDN, then:

L1
6. √FLOW PROP VLV LOOP tb (two) – ICH
7. H2O LOOP 2(1) BYP MODE – MAN
MAN – DECR (hold 30 sec)

SM SYS SUMM 2

If EVAP OUT T not ~39 degF and stable:

8. Perform TOPPING FES STARTUP (ORB OPS, ECLS), then:

If prior to deorb prep:

If dual or triple G2:

9. Perform G2 SET CONTRACTION (ORB OPS, DPS) to single G2, then:

O15:F
10. MMU 2 – OFF

W1-10
11. Mnvr to shade windows from sun or install Window Shades

SM SYS SUMM 1

12. Check kW; if >14 kW: Perform PRIOR PWRDN (numbered) (except FES and one PGSC) until ≤ 14 kW, then:
13. Use UNDOCKING/DEORB/ENTRY DELTAS PULLOUT PAGE, 10-37, for changes to UNDOCKING/DEORB PREP and ENT >>

If in deorb prep:

F6,F8
14. √FLT CNTLR PWR (two) – OFF
15. Use one IDP/CRT with two MDUs, as reqd

O7
16. GPS 1,3 PWR (two) – OFF
PRE AMPL (four) – OFF

O8
17. RDR ALTM (two) – OFF
18. MLS (three) – OFF

L2
19. ANTISKID – OFF
NWS – OFF
20. Continue with DEORB PREP; use UNDOCKING/DEORB/ENTRY DELTAS PULLOUT PAGE, 10-37, for changes

MS PWRDN

	1.	Minimize ltg on Aft Flt Deck and Middeck
R14:D	2.	cb TV (fifteen) – op
:E	3.	CAMR (six) – op
A3	4.	MON 1,2 PWR (two) – OFF
	If CO2 RMVL SYS flown:	
MO51F	5.	CO2 RMVL SYS CNTLR 1(2) MODE – STBY (hold 3 sec)
	6.	Remove current cans, install two fresh LiOH cans
	If in deorb prep:	
O14,O15, O16:A	7.	BRAKES (three) – OFF
O14,O15, O16:E	8.	cb ADTA (four) – op

NOTE

KEEP THIS PAGE UNTIL TOUCHDOWN.

Incorporate following changes or remove these pages for use with the indicated checklist or cue card.

Undocking from ISS will be performed with Single G2 (i.e., no +Z redundancy)

Perform NOMINAL DEORBIT PREP (DEORB PREP) with the following contingency deltas to the procedure

A. Deltas to DEORB PREP
   1. Use one FLT CNTLR PWR, DDU, PGSC, and one IDP/CRT with two MDUs, as reqd
   2. Minimize ltg
   3. Minimize sun in cab if possible

   If rev 3 deorb, deltas to LAUNCH DAY ORBIT 3 (CONT DEORB):
   4. ENT FWD FLT DECK CONFIG 10
      Do not pwr MLS

   If nominal deorb prep:
   Deltas to NOMINAL DEORBIT PREP (DEORB PREP):
   5. Verify steps 14 thru 20, 10-35, MS, steps 7,8, 10-36
   6. DED DISP ENT CONFIG 6
      Do not pwr ADTAs
      Add: Pwr NAV/LDG AIDS per ENTRY MANEUVERS (Cue Card)
      Minimize MDU use
   7. ENT SWITCH LIST/VERIF
      Do not pwr LRUs previously pwrd dn

B. Deltas to DEORBIT BURN (ENT)
   1. Maintain window shading att until TIG-15

   At TIG-15:
   2. Remove Window Shades if installed

   At TIG-10:
O14,O15,O16:E 3. cb DDU L,R (four) – cl
   4. Use two IDP/CRTs with four MDUs, two FLT CNTLR PWR for burn

Cont next page

C. Deltas to POST BURN (ENT)

F6,F8 1. L,R FLT CNTLR PWR (two) – OFF

O14,O15, O16:E 2. cb DDU L,R (four) – op

3. Use one IDP/CRT with two MDUs

4. Delete ANTISKID, NWS callouts (ENTRY SW CHECK)

At EI-15:

O7 5. GPS 3 PWR – ON
PRE AMPL (two) – ON
Wait 30 sec
GNC I/O RESET
GNC 55 GPS STATUS
INIT – ITEM 16 EXEC
NAV – ITEM 19 EXEC

D. Deltas to ENTRY MANEUVERS (Cue Card)

At EI:

O14,O15, O16:E 1. cb DDU L,R (four) – cl

F6 2. L FLT CNTLR PWR – ON

3. Use two IDP/CRTs with four MDUs

O14,O15, O16:A 4. BRAKES (three) – ON

O14,O15, O16:E cb ADTA 1,2,3 (three) – cl

GNC I/O RESET

L2 ANTISKID – ON

NWS – 1

At V = 12K:

5. Perform RAD FLOW in unfailed loop

At M = 2.7:

6. Use two HUDs, MLSs, and RAs
GNC I/O RESET

E. Deltas to POST LDG (ENT)

If EVAP OUT T high and incr, go to EMER PWRDN (Cue Card)

F. Deltas to EVAP OUT TEMP HIGH (Cue Card)

If EVAP OUT T HIGH and V > 12K:

Establish RAD FLOW in unaff loop:

L1 1. RAD BYP VLV MODE 1(2) – AUTO
CNTLR LOOP 1(2) – AUTO A(B)

2. Perform EVAP OUT T HIGH (Rads Coldsoaked), steps 2 thru 4

If EVAP OUT T HIGH and V < 12K:

If loop 1(2) lost:

L1 3. NH3 CNTLR B(A) – PRI/GPC

LOSS OF 1 FC

If before deorb prep:

L1 1. √CAB FAN A(B) – ON

If total Orb kW > 18:

2. Perform PRIOR PWRDN, GROUP 1,2 (except FES), then:

3. Perform PL PWRDN

If FC 1 or 2 failed:

R1 4. √MN BUS TIE A,B (two) – ON
√C – OFF

If FC 3 failed:

5. PL PRI MNB – ON
MNC – OFF
FC3 – OFF

6. √MN BUS TIE C,A (two) – ON
√B – OFF

If any FC AMPS > 330 or ΔAMPS > 100:

7. Perform MAL, EPS SSR-8, BUS LOADING – LRU SELECT, then:

8. Go to step 18

If in deorb prep:

9. Minimize ltg

10. Use only one DDU, and FLT CNTLR PWR as reqd. One IDP/CRT off as reqd

O7 11. GPS 1,3 PWR (two) – OFF
PRE AMPL (four) – OFF

O8 12. RDR ALTM (two) – OFF

13. MLS (three) – OFF

L1 14. √CAB FAN A(B) – ON

R14:D 15. cb TV (fifteen) – op
:E CAMR (six) – op

A3 16. MON 1,2 PWR (two) – OFF

A11 17. CRYO TK HTR (four) – OFF

If FC recoverable:

18. Go to MAL, EPS SSR-3, FC SHUTDN C&W LIMIT CHANGE >>

If FC unrecoverable:

19. Make FDF Delta changes as given (next page), then as time permits reconfig C/W limits per MAL, EPS SSR-3, FC SHUTDN C&W LIMIT CHANGE

Cont next page

FDF changes:

A. Deltas to DEORBIT BURN (ENT)
TIG-5:

L1 1. TOP EVAP HTR NOZ (two) – OFF
DUCT sel – OFF
HI LOAD DUCT HTR sel – OFF
HUM SEP (two) – OFF
L2 FLASH EVAP FDLN HTR SPLY (two) – OFF

B. Deltas to POST BURN (ENT)
At EI-15:

O7 1. GPS 1,3 PWR (two) – ON
PRE AMPL (four) – ON
Wait 30 sec
GNC I/O RESET
GNC 55 GPS STATUS
INIT – ITEM 14,16 EXEC
NAV – ITEM 17,19 EXEC
O8 2. MLS (three) – ON
3. RDR ALTM (two) – ON

C. Deltas to EPS procs in this book

1. FC REACTANT VLV CLOSED: Delete step 6;
Change step 2 to read:
If aff FC/MN bus tied and COOL P > 40:
2. MN BUS TIE (three) – ON (ASAP)
(Aff) MN BUS TIE (one) – OFF (ASAP)
2. FC COOL P: Delete step 1
3. BUS TIE, steps 1,7: Delete '(A to...A)'
4. FC1(2,3) H2 PUMP ↑↓: Replace step 3 with:
If aff FC/MN bus tied:
3. MN BUS TIE (three) – ON
(Aff) MN BUS TIE (one) – OFF
5. FC SAFING: Replace steps 7,8 with:
If aff FC/MN bus tied:
7. MN BUS TIE (three) – ON
8. (Aff) MN BUS TIE (one) – OFF
6. FC H2O RLF NOZ TEMP ↑↓: Replace step 3 with:
If aff FC/MN bus tied:
3. MN BUS TIE (three) – ON
(Aff) MN BUS TIE (one) – OFF
7. FC DELTA V 1(2,3):
Delete step 1
Add 'MN BUS TIE (three) – ON, then:' to beginning of step 4

Cont next page

D. Deltas to EPS (ENT PKT)

1. Perform LOSS OF 1 FC, part B, steps 1 thru 8 (ENT PKT, PWRDN), then:

If in deorb prep:

2. Go/return to NOMINAL DEORBIT PREP (DEORB PREP) >>

E. Deltas to FLIGHT PLAN at 10 min prior to 'Go to DEORB PREP', add: 'perform LOSS OF 1 FC, steps 9 thru 17 (ORB PKT, PWRDN)'

This Page Intentionally Blank

LOSS OF 2nd FC ON-ORBIT (TIG < 4 hr)

If Rev 2,3 deorbit:

1. Go to LOSS OF 2nd FC (ASC PKT, PWRDN) >>

2. If TIG < 1.5 hr: Sel new TIG > 1.5 hr
(this pwrdn and the deorbit prep require 1.5 hr)

NOTE

Do NOT perform BUS LOSS ACTION unless bus shorted (step 29 regains bus)

* FC capability is ~12 kW for sustained operations, *
* ~13 kW for short duration (~4 hr), ~16 kW for *
* contingency situations (~10 min). Purge FC at *
* 430 amps or less *

MS 3. Perform AFT PNL PWRDN, 10-43, immed

C3 4. √MSTR MADS PWR – OFF

5. Minimize ltg

6. Use only one DDU, PGSC, and FLT CNTLR PWR as reqd. One IDP/CRT off as reqd

O7 7. GPS PWR (three) – OFF
PRE AMPL (six) – OFF

O8 8. √RDR ALTM (two) – OFF

MS 9. √MLS (three) – OFF

If GPC 2 on:

10. GNC 0 GPC MEMORY
CONFIG – ITEM 1 +2 EXEC
Modify MC 2 per table – – – →

CONFIG GPC		2 10000
STR	1	1
	2	1
	3	1
	4	1
PL	1/2	0
CRT	1	1
	2	1
	3	0
	4	1
L	1	0
	2	0
MM	1	1
	2	1

For any IDP that is OFF:

11. GPC/CRT1/X EXEC

12. √DOWNLIST GPC (ITEM 44) – 1

CRT GNC, OPS 201 PRO

O6 13. GPC MODE 2 – STBY (tb-bp)
– HALT
PWR 2 – OFF

14. √MODE 3,5 (two) – HALT (tb-bp)
PWR 3 – OFF

O15:F 15. √MMU 2 – OFF

Cont next page

16. GNC 20 DAP CONFIG
Sel TAIL PRI P,Y OPTION
Sel PRI JETS

O7 17. AFT L,R RCS MANF ISOL 4 (two) – CL

O14,O15, O16:F 18. RJDF DRIVER (four) – OFF
LOGIC (four) – OFF

O6 19. MDM FF4 – OFF

O14:F 20. RJDA 2A L4/R4 DRIVER – OFF
LOGIC – OFF

L1 21. √FLOW PROP VLV LOOP tb (two) – ICH

22. SM 88 APU/ENVIRON THERM

23. H2O LOOP 2 BYP MODE – MAN
MAN – INCR(DECR)
(adjust until ICH FLOW ~950)

If no MANF leak:

R1 24. √O2,H2 MANF VLV (four) – OP
TK1 HTRS B – AUTO (MNA or MNB ↓) or
TK2 HTRS B – AUTO (MNC or no MN BUS ↓), then:
All others OFF

If MANF leak:

25. √O2/H2 HTR LOSS TABLE (EPS), 5-20
Sel one htr in one O2,H2 TK

R2 26. HYD CIRC PUMP (three) – OFF

L4:L 27. cb AC1,2 ΦA CAB T CNTLR 1,2 (two) – op

If not MN bus short, tie three MN BUSES:

28. Perform BUS TIE (Cue Card), then:

Post BUS TIE config check:

L1 29. √CAB FAN A(B) – ON

30. Perform RCS SECURE, FWD RCS only (RCS), 8-2, then:

31. Perform MAL, EPS SSR-3, FC SHUTDN C&W LIMIT CHANGE, then:

32. Go to LOSS OF 2 FC (CONT DEORB). Refer to Activities Priority Table for activities to be performed in the CONT DEORB

AFT PNL PWRDN

A11 1. CRYO TK HTR (four) – OFF
A12 2. APU HTR LUBE OIL LN (three) – OFF
3. HYD HTR (eight) – OFF
A14 4. RCS/OMS HTR FWD RCS – OFF
RCS JET (five) – OFF
5. Perform PL SAFING, then:

> CAUTION
> If stow prob occurs with either RMS and/or KU-BD ANT, perform aff sys QUICK RESPONSE JETTISON (CONT DEORB)

If RMS grappled to OBSS:
6. Perform OBSS JETTISON (PDRS OPS FS, OBSS CONTINGENCY), then:
If RMS-only:
7. Perform RMS PWRDN (PDRS OPS), then:
If KU-BD ANT deployed:
8. Perform KU-BD ANT STOW (ORB OPS, COMM/INST), then:
If radiators deployed:
9. Perform RAD STOW (ORB OPS, ECLS), then:
A3 10. MON PWR (two) – OFF
R14:D 11. cb TV (fifteen) – op
:E CAMR (six) – op
ML86B:C 12. √cb MNB EXT AIRLK HTR VEST Z1/2/3 – op
If MMU is pwrd:
:D 13. cb MNA MMU PORT HTR A – op
STBD HTR A – op
MNB MMU PORT HTR B – op
STBD HTR B – op
MD44F 14. Cab temp cntl act link – pin to FULL COOL
If CO2 RMVL SYS flown:
MO51F 15. CO2 RMVL SYS CNTLR 1(2) MODE – STBY (hold 3 sec)
16. Remove current cans and install two fresh LiOH cans

This Page Intentionally Blank

LOSS OF 2nd FC ON-ORBIT (TIG > 4 hr)

NOTE

Do NOT perform BUS LOSS ACTION unless bus shorted (step 8 regains bus).

If docked with ISS, perform PWRDN completely prior to undocking

```
*  FC capability is ~12 kW for sustained operations,  *
*   ~13 kW for short duration (~4 hr), ~16 kW for     *
*   contingency situations (~10 min).  Purge FC at    *
*   430 amps or less                                  *
```

MS 1. Perform MS OVHD AND AFT PNL PWRDN, 10-47, immed

C3 2. √MSTR MADS PWR – OFF

GNC 21 IMU ALIGN

3. IMU 1,2 (two) – desel

If GPC 2(3) on:

4. GNC 0 GPC MEMORY

CONFIG – ITEM 1 +2 EXEC

Modify MC 2 per table – – – →

√DOWNLIST GPC (ITEM 44) – 1

CRT GNC, OPS 201 PRO

For any IDP that is OFF:

5. GPC/CRT1/X EXEC

O6 6. GPC MODE 2 – STBY (tb-bp) – HALT

PWR 2 – OFF

√MODE 3,5 (two) – HALT (tb-bp)

√PWR 3 – OFF

O15:F 7. MMU 2 – OFF

If not MN bus short, tie three MN buses:

8. Perform BUS TIE (EPS), 5-16, then:

9. Minimize ltg

10. Use one DDU, PGSC, and FLT CNTLR PWR as reqd. Use one IDP/CRT with four MDUs

O7 11. GPS PWR (three) – OFF

PRE AMPL (six) – OFF

O8 12. √RDR ALTM (two) – OFF

13. √MLS (three) – OFF

CONFIG GPC		2 10000
STR	1	1
	2	1
	3	1
	4	1
PL	1/2	0
CRT	1	1
	2	1
	3	0
	4	1
L	1	0
	2	0
MM	1	1
	2	1

Cont next page

L1 14. √FLOW PROP VLV LOOP tb (two) – ICH
15. AV BAY 2 FAN A,B (two) – OFF
16. √CAB FAN A(B) – ON
L4:L 17. cb AC1,2 ΦA CAB T CNTLR 1,2 (two) – op
18. Perform GG FREE DRIFT, ATT ID B (mnvr in PRI, establish drift in VERN) (ORB OPS, RCS), then:
If docked with ISS, have ISS establish mated att control
19. Set event timer for 30 min (for FES duct htr deact)
O14,O15, O16:F 20. RJD LOGIC,DRIVER (seventeen) – OFF
O6 21. MDM FF1,FF2,FF4 (three) – OFF
FA1,FA2,FA3,FA4 (four) – OFF
L1 22. TOP EVAP HTR NOZ L,R (two) – OFF
23. √HI LOAD DUCT HTR sel – OFF
24. SM 88 APU/ENVIRON THERM
25. H2O LOOP 2 BYP MODE – MAN
MAN – INCR(DECR)
(adjust until ICH FLOW ~950)
If no MANF leak:
R1 26. √O2,H2 MANF VLV (four) – OP
TK1 HTRS B – AUTO (MNA or MNB ↓) or
TK2 HTRS B – AUTO (MNC or no MN BUS ↓), then:
All others OFF
If MANF leak:
27. √O2/H2 HTR LOSS TABLE (EPS), 5-20
Sel one htr in one O2,H2 TK
R2 28. BLR CNTLR/HTR (three) – OFF
29. HYD CIRC PUMP (three) – OFF
R4 30. Verify RMS, KU-BD ANT, and RADS stowed, then:
MA73C:A, B MCA LOGIC (fourteen) – OFF
If H2O LOOP 2 failed:
:A 31. MCA LOGIC MNB FWD 2 – ON
30 min after FES deact:
L1 32. TOP EVAP HTR DUCT sel – OFF
33. Perform MAL, EPS SSR-3, FC SHUTDN C&W LIMIT CHANGE, then:
If docked with ISS, perform UNDOCKING DELTAS prior to undocking
34. Go to LOSS OF 2 FC (CONT DEORB)

MS OVHD AND AFT PNL PWRDN

O14:A	1.	IMU 1 – OFF (confirm IMU desel)
O15:A	2.	2 – OFF (confirm IMU desel)
O16:E	3.	cb MNC RCS/OMS PRPLT QTY GAUGE – op
R14:D	4.	TV (fifteen) – op
A11	5.	CRYO TK HTR (four) – OFF
A12	6.	APU HTR LUBE OIL LN (three) – OFF
	7.	HYD HTR (eight) – OFF
A14	8.	RCS/OMS HTR FWD RCS JET 1,2,3,4 (four) – OFF
ML31C	9.	VAC VENT NOZ HTR – OFF
ML86B:A	10.	cb MNA H2O LN HTR A – op
	11.	MNB H2O LN HTR B – op
:C	12.	√cb MNB EXT AIRLK HTR VEST Z1/2/3 – op
		If MMU is pwrd:
:D	13.	cb MNA MMU PORT HTR A – op STBD HTR A – op MNB MMU PORT HTR B – op STBD HTR B – op
MD44F	14.	Cab temp cntl act link – pin to FULL COOL
	15.	Perform PL SAFING, then:

> CAUTION
> If stow prob occurs with either RMS and/or KU-BD ANT, perform aff sys QUICK RESPONSE JETTISON (CONT DEORB)

If RMS grappled to OBSS:

16. Berth OBSS or perform OBSS JETTISON (PDRS OPS FS, OBSS CONTINGENCY), then:

If RMS-only:

17. Perform RMS PWRDN (PDRS OPS), then:

If KU-BD ANT deployed:

18. Perform KU-BD ANT STOW (ORB OPS, COMM/INST), then:

If radiators deployed:

19. Perform RAD STOW (ORB OPS, ECLS), then:

	20.	Report to CDR: RMS, KU-BD ANT, and RADS stowed
O14:F	21.	MMU 1 – OFF
R14:E	22.	cb CAMR (six) – op
A3	23.	MON PWR (two) – OFF
		If CO2 RMVL SYS flown:
MO51F	24.	CO2 RMVL SYS CNTLR 1(2) MODE – STBY (hold 3 sec)
	25.	Remove current cans and install two fresh LiOH cans

UNDOCKING DELTAS

NOTE
Following steps reqd to recover RCS functionality prior to undock

	1.	One hour prior to undock:
A14		RCS/OMS HTR FWD RCS JET 1,2,3,4 (four) – ON
O14,O15, O16:F	2.	RJD LOGIC,DRIVER (seventeen) – ON
O6	3.	MDM FF1,FF2,FA1,FA2 (four) – ON

After undocking complete and post Final Sep:

	4.	Perform GG FREE DRIFT, ATT ID B (mnvr in PRI. Establish drift in VERN) (ORB OPS, RCS), then:
O14,O15, O16:F	5.	RJD LOGIC,DRIVER (seventeen) – OFF
O6	6.	MDM FF1,FF2,FA1,FA2 (four) – OFF
A14	7.	RCS/OMS HTR FWD RCS JET 1,2,3,4 (four) – OFF

LOSS OF 2 FREON LOOPS

WARNING
FC purge must be started and loads pwrd dn ASAP
Orbiter lifetime is expected to be 120 min from LOSS OF 2nd FREON LOOP with all three FCs running. This assumes three FCs are pwrd dn to a total level of 8 kW immed and are continuously purged
Earliest possible landing is reqd

NOTES

- Failure assumed to occur after GO for On-orbit and before Deorbit TIG-2:05
- COMM procs, 10-65 thru 10-68, should be used throughout this proc and CONT DEORB
- Preferred comm config is:
  A. UHF only
  B. GSTDN S-BD if reqd
  C. TDRS only if mandatory
- If docked to ISS, this proc is to be worked simo with JOINT EXPEDITED UNDOCKING AND SEPARATION (SODF: JOINT OPS)

Cont next page

TIME CRITICAL PROCEDURES

NOTE

Undocking will be performed with Single G2
(i.e., no +Z redundancy)

1. If in OPS 1: Go to LOSS OF 2 FREON LOOPS (POST OMS-2) (ASC PKT, PWRDN) >>
2. Have CDR perform JOINT EXPEDITED UNDOCKING AND SEPARATION (SODF: JOINT OPS)
3. Have MS exec RAD STOW, KU-BD ANT STOW, and PLBD CLOSE, 10-57, ASAP
4. Have second MS exec RMS STOW and MS OVHD AND AFT PNL CONFIG, 10-59 thru 10-62, ASAP
5. Have third MS exec COMM PWRDN, 10-65; delay 10 min max if AOS

Perform following steps ASAP:

O14,O15, O16:F	6.	√Pri RJD LOGIC,DRIVER (sixteen) – ON
		DAP: ALT (this proc results in loss of VERNs)
O16:F		RJD MANF L5/F5/R5 DRIVER – OFF
	7.	Record MET of failure of 2nd FREON LOOP: ___/___ ___:___ ___:___ ___
C3	8.	MSTR MADS PWR – OFF
MS R11U	9.	√FC PURGE HTR – ON
	10.	√VLVS 1,2,3 (three) – OP
	11.	Minimize ltg
CRTX	12.	Use only one fwd IDP/CRT with one MDU (save IDP3 for entry)
	13.	Use only one PGSC
F6/F8	14.	√FLT CNTLR PWR (two) – OFF, as reqd

Cont next page

Config GPC 1 to MC 2:

15. GNC 0 GPC MEMORY
16. CONFIG – ITEM 1 +2 EXEC

If not GNC 201, then:

17. GNC, OPS 201 PRO
18. Modify MC 2 per table

CONFIG GPC		2 10000
STR	1	1
	2	1
	3	1
	4	1
PL	1/2	0
CRT	1	1
	2	1
	3	0
	4	1
L	1	0
	2	0
MM	1	1
	2	1

NOTE

The following must be an OPS mode recall:
GNC, OPS 201 PRO

For any IDP that is OFF:

19. GPC/CRT1/X EXEC

C3 20. √BFC CRT DISP – OFF

O6 21. GPC MODE 2,3 (two) – STBY (tb-bp), HALT
– STBY (tb-RUN)
– HALT (tb-bp)
PWR 2,3 (two) – OFF
MODE 5 – STBY (tb-RUN)
– HALT (tb-bp)
OUTPUT 5 – NORM
PWR 5 – OFF

O7 22. GPS PWR (three) – OFF
PRE AMPL (six) – OFF

O8 23. √RDR ALTM (two) – OFF

24. √MLS (three) – OFF

C3 25. FCS CH (four) – AUTO

R4 26. MPS MANF PRESS (two) – CL

R2 27. HYD CIRC PUMP (three) – OFF

28. MPS He ISOL (six) – CL
PNEU He ISOL – CL
L ENG He XOVR – CL

L1 29. HUM SEP (two) – OFF

30. √IMU FAN B – ON
A,C (two) – OFF

Cont next page

MD44F 31. Cab temp cntl act link – pin to FULL COOL
L1 32. CAB FAN A,B (two) – OFF
33. √AV BAY 1 FAN A – OFF
√2,3 FAN A,B (four) – OFF
√1 FAN B – ON
34. FREON PUMP LOOP 1,2 (two) – OFF (one-ON, if any flow)
35. RAD CNTLR LOOP 1,2 (two) – OFF
36. √NH3 CNTLR A,B (two) – OFF
If no FREON PUMPS ON, then:
L2 37. O2 SYS 1,2 SPLY (two) – OP (tb-OP)
L1 38. FLASH EVAP CNTLR PRI A,B (two) – OFF
TOP EVAP HTR NOZ (two) – OFF
DUCT sel – OFF
39. HI LOAD DUCT HTR sel – OFF
L2 40. FLASH EVAP FDLN HTR SPLY (two) – OFF
If one FREON PUMP ON:
L1 41. FLASH EVAP CNTLR PRI A – ON
42. TOP EVAP HTR NOZ (two) – OFF
√DUCT sel – ON
43. √HI LOAD DUCT HTR sel – ON
L2 44. FLASH EVAP FDLN HTR B SPLY – OFF
45. √ANTISKID – OFF
46. √NWS – OFF
O6 47. S TRK PWR -Y,-Z (two) – OFF
48. ANNUN BUS SEL ACA 2/3 – OFF
GNC 21 IMU ALIGN
49. IMU 1,2 (two) – desel
O14, O15:A – OFF

CAUTION
Do not perform steps 50 thru 56 until PLBDs are closed

C2 50. IDP/CRT MAJ FUNC (three) – GNC
O6 51. GPC MODE 4 – STBY (tb-bp)
– HALT
PWR 4 – OFF
GNC 0 GPC MEMORY
52. CONFIG – ITEM 1 +2 EXEC
53. Assign PL1/2 to GPC 1 (provides Uplk path)
54. GNC, OPS 201 PRO

Cont next page

55. All IDPs,MDUs – OFF (use one IDP/CRT with one MDU as reqd until CONT DEORB proc, 3 min OFF for each min ON)

O6 56. MDM FF1,4 (two) – OFF
FA1,4 (two) – OFF

F6 57. CDR disp sws – green dot

NOTE

If no site avail, bailout will be reqd; TIG will = MET of 2nd FREON LOOP failure + 1 hr

58. Sel ELS TIG ≤ 1 hr after MET of 2nd FREON LOOP failure (from MCC or PGSC):
Selected TIG ___:___:___ MET
(-) Present TIME ___:___:___ MET
(=) Time to TIG ___:___:___ MET

If PL MDMs not currently being used for comm:

59. Verify PLBDs are closed, then:

O6 √MDM PL1,PL2 (two) – OFF

L4:J 60. cb AC3 ΦA SIG CONDR HUM SEP – op
ΦB SIG CONDR IMU FAN – op

:L 61. AC1 ΦA CAB T CNTLR 2 – op
ΦB AV BAY 2 S/C – op

62. AC2 ΦA CAB T CNTLR 1 – op
ΦB AV BAY 3 S/C – op
AC3 ΦA H2O CNTLR 1 – op

R1 63. MN BUS TIE (three) – ON

64. √O2,H2 MANF VLV TK1,TK2 (four) – op
TK2 HTRS A,B (four) – OFF
TK1,TK3 HTRS A,B (eight) – AUTO

If O2 TK1(TK3) QTY < 80%:

65. O2 TK1,TK3 HTRS A (two) – OFF

R2 66. BLR CNTLR/HTR 2 – OFF
PWR 2 – OFF

If not docked with ISS or when undocking complete and Post Final Sep:

67. Perform POST UNDOCKING AND FINAL SEP RECONFIG, 10-55

68. Go to ENTRY CONFIG (CONT DEORB, LOSS OF 2 FREON LOOPS D/O PREP) by ~ TIG-15 >>

This Page Intentionally Blank

POST UNDOCKING AND FINAL SEP RECONFIG

	1.	DAP: FREE
O14,O15, O16	2.	RJD LOGIC,DRIVER (seventeen) – OFF
O14:B	3.	cb MNA OI SIG CONDR OF 1/4 A – op
O15:B	4.	cb MNB OI SIG CONDR OF 1/4 B – op 2/3 A – op
O16:B	5.	cb MNC OI SIG CONDR OF 2/3 B – op
O14,O15, O16:E	6.	√cb L,R,AFT DDU (six) – op

This Page Intentionally Blank

MS PULLOUT PAGE

MS Execute ASAP

R11U 1. FC PURGE HTR – ON
VLVS (three) – OP
2. Minimize ltg on Aft Flt Deck
If CO2 RMVL SYS flown:
MO51F 3. CO2 RMVL SYS CNTLR 1(2) MODE – STBY (hold 3 sec)

NOTE
For following RAD STOW, KU-BAND ANT STOW, and PLBD CLOSE procs, use the following MCA config. Disregard MCA sw throws in other procs until PLB doors closed

MCA LOGIC CONFIG

MA73C:A, B 4. √All MCA LOGIC (fourteen) – ON
:A 5. MCA LOGIC MNA FWD 1 – ON
MNB FWD 2 – OFF
MID 1 – OFF
MNC FWD 3 – OFF
:B MNA AFT 1 – OFF
MNB AFT 2 – OFF
MID 3 – OFF
MNC AFT 3 – OFF
6. GNC 23 RCS
ITEM 1 EXEC (FRCS page)
OVRD FRCS MANF(s) – OP

CAUTION
If stow prob occurs with KU-BD ANT, perform QUICK RESPONSE JETTISON (CONT DEORB)

If KU-BD ANT deployed:
7. Perform KU-BD ANT STOW (ORB OPS, COMM/INST), then:
If radiators deployed:
8. Perform RAD STOW (ORB OPS, ECLS), then:

Cont next page

PLBD CLOSURE

> WARNING
> Verify no obstructions before closing and latching PLBD (Ku ANT,RAD,RMS,etc)

```
O6          1.   √MDM PL1,PL2 (two) – ON
                 SM I/O RESET
            2.   Verify PL SAFING complete
CRT4        3.   SM, OPS 202 PRO – close PLBD ASAP
            4.   SM PL BAY DOORS
R13L        5.   PL BAY DR SYS 1,2 (two) – ENA
CRT4        6.   AC POWER ON – ITEM 1 EXEC
                 AUTO MODE SEL – ITEM 3 EXEC
                 PBD SW BYPASS – ITEM 14 EXEC
                       CLOSE – ITEM 17 EXEC
            If 'PLB SEQ FAIL' msg during door closure and aft latches
            :  for that door are not 'CL':
            :    7.   Check door scallop on or below tgt line before
            :         continuing in MAN mode; otherwise:
            :              8.   Perform MAL, MECH SSR-2,
            L                   CONTINGENCY PLBD CLOSURE, then:
            9.   PBD STOP – ITEM 16 EXEC
            10.  AC POWER OFF – ITEM 2 EXEC
                 GPC/CRT 04 EXEC
R11L        11.  IDP/CRT4 PWR – OFF
R13L        12.  PL BAY DR SYS (two) – DSBL
A7U                    √FLOOD (all) – OFF
MA73C:A,    13.  All MCA LOGIC sw except MNA FWD 1 (thirteen)
      B                                                  – OFF
      :A         √MCA LOGIC MNA FWD 1 – ON
            14.  GNC 23 RCS
                 ITEM 1 EXEC (FRCS page)
                 OVRD FRCS MANF(s) – OP
            15.  Report to CDR:  RMS, KU-BD ANT, and RADS stowed;
                 PLBD closed
            16.  Go to FLUID LOADING PREP, 10-63
```

RMS STOW

NOTE
For following RMS STOW, use following MCA config. Disregard MCA sw throws in other procs until PLB doors closed

MA73C:A, B
1. √MCA LOGIC MNA MID 1 – ON
√3 – ON
√MNB MID 2 – ON
√4 – ON
√MNC MID 2 – ON
√4 – ON
2. Perform PL SAFING, then:

CAUTION
If stow prob occurs with RMS, perform QUICK RESPONSE JETTISON (CONT DEORB)

If RMS grappled to OBSS:
3. Perform OBSS JETTISON (PDRS OPS FS, OBSS CONTINGENCY), then:

If RMS-only:
4. Perform RMS PWRDN (PDRS OPS), then:

MS OVHD AND AFT PNL CONFIG

O13:A
1. cb ESS 1BC C/W A – op
:B CRYO QTY O2,H2 TK2 (two) – op
:C 2CA C/W B – op
(all SM tones and C/W lights and tones lost; CRT FAULT SUMM and SM ALERT light remains)
cb ESS 2CA MTU B – op
:E 3AB GPC STAT – op

O14:A
2. √BRAKES MNA – OFF
3. √RGA 1 – OFF
:B
4. cb MNA OI SIG CONDR OM 1/2 A – op
MDM OF 1/2 A – op
3/4 A – op
H2O BYP LOOP 1 SNSR – op
MSN TIMER FWD – op
EVENT TIMER AFT – op

Cont next page

O14:C 5. cb MNA UTIL PWR O19/MO52J – op
:D FREON RAD CNTLR 1,2 (two) – op
O2/N2 CNTLR 1 – op (leave cl if PCS 1 active)
CAB VENT – op
VENT ISOL – op
:E √ADTA 1 – op
√ACCEL 1 – op
DDU L,AFT (two) – op
:F 6. MMU 1 – OFF
7. ASA 1 – OFF
O15:A 8. √BRAKES MNB – OFF
9. √RGA 2 – OFF
4 – OFF
:B 10. cb MNB OI MDM OF 1/2 B – op
H2O BYP LOOP 2 SNSR – op
MSN TIMER AFT – op
EVENT TIMER FWD – op
:C UTIL PWR F1/MO13Q – op (leave cl if PGSC reqd)
:D FREON RAD CNTLR 1,2 (two) – op
O2/N2 CNTLR 2 – op (leave cl if PCS 2 active)
:E ADTA 2 – op
ACCEL 2 – op
DDU L,R (two) – op
:F 11. MMU 2 – OFF
12. ASA 2 – OFF
13. ACCEL 4 – OFF
O16:A 14. √BRAKES MNC – OFF
15. √RGA 3 – OFF
:B 16. cb MNC OI MDM OF 3/4 B – op
AUX TIMING BUFF – op
:C 17. CRYO O2 HTR TK2 SNSR 1 – op
If GALLEY:
18. cb MNC UTIL PWR A11/A15/MO30F – op

Cont next page

O16:C	19.	cb MNC ANNUN AFT ACA 4/5 – op
		O2 EMER – op
:E		ADTA 3,4 (two) – op
		DDU R,AFT (two) – op
		RCS/OMS PRPLT QTY GAUGE – op
:F	20.	ASA 3,4 (two) – OFF
	21.	ACCEL 3 – OFF
O17:A	22.	ATVC (four) – OFF
:B	23.	EIU (three) – OFF
:C	24.	SIG CONDR FREON A,B (two) – OFF
:D		OA 1/2/3 – OFF
	25.	MDM OA 1/2/3 – OFF
	26.	MEC 1 – OFF, wait 2 sec, then
		2 – OFF
MO58F	27.	TV PWR – OFF
O19	28.	COAS – OFF
A11	29.	CRYO TK4 HTR O2,H2 A,B (four) – OFF
A12	30.	APU HTR GAS GEN/FU PUMP 2 – OFF
		LUBE OIL LN 1,2,3 (three) – OFF
		APU HTR TK/FU LN/H2O SYS
		1B,2A,2B,3A (four) – OFF
		1A,3B (two) – AUTO
	31.	HYD HTR (eight) – OFF
A13	32.	OS AUD SPKR PWR – OFF
A14	33.	RCS/OMS HTR FWD RCS – OFF
		L,R POD (four) – OFF
		OMS CRSFD LN (two) – OFF
		FWD RCS JET (five) – OFF
		AFT RCS JET (five) – OFF
A15	34.	PTU/MAIN BUS A,B (two) – OFF (tb-OFF)
A6U	35.	FLT CNTLR PWR – OFF, as reqd
	36.	ANNUN BUS SEL – OFF

Cont next page

R14:A	37.	cb MNA ADC 1A/2A – op
		MNB ADC 1B/2B – op
:B		MNA,MNB,MNC PALLET DSC (three) – op
:D	38.	TV (fifteen) – op
:E		CAMR (six) – op
L9,R10	39.	PS,MS AUD PWR (two) – OFF
	40.	Minimize Middeck ltg
ML31C	41.	VAC VENT NOZ HTR – OFF
ML86B:A	42.	cb MNB H2O LN HTR B – op
	If MMU is pwrd:	
:D	43.	cb MNA MMU PORT HTR A – op
		STBD HTR A – op
		MNB MMU PORT HTR B – op
		STBD HTR B – op
MO39M	44.	MIDDECK COMM CCU PWR – OFF
MO42F		SPKR AUD PWR – OFF
	If no GALLEY:	
	45.	Go to step 48
GALLEY	46..	OVEN/RHS – OFF
		H2O HTR (two) – OFF
		√OVEN FAN – OFF
	47.	Go to step 50
	48.	FOOD WARMER – OFF
	49.	H2O DISPENSER PWR pb – OFF
MD44F	50.	Cab temp cntl act link – pin to FULL COOL
MO13Q	51.	All MIDDECK lts – lt off

FLUID LOADING PREP

GALLEY
1. OVEN/RHS – ON
2. Unstow, fill 4 water containers (per crewmember) with 8 oz of water each. Temp stow near seat
3. Unstow 8 salt tablets (per crewmember). Temp stow in Flt Suit pocket
4. OVEN/RHS – OFF
5. √H2O HTR (two) – OFF
6. √OVEN FAN – OFF
7. Stow Personal Hygiene Hose

NOTE

Ensure sufficient containers and salt tablets are prepared to continue fluid loading thru entry

FLUID LOADING

Immed (or as soon as time permits), begin drinking H2O (one 8-oz container every 15 min with a salt tablet in every other container); continue thru entry

CLOTHING CONFIG

Don QDM for temp > 90 degF and discomfort. If cab temp > 95 degF and no evaporative cooling is sensed, don LES, check tabs, close visor, LES O2 – ON

NOTE

Inflate anti-g suit as needed for on-orbit circulatory support

FDF CONFIG

1. Unstow: ENT, ENT PKT, ENT Cue Cards
2. Use DEORBIT BURN MONITOR and ENTRY MANEUVERS Cue Card (CONT DEORB, LOSS OF 2 FREON LOOPS D/O PREP)

CAB CONFIG

1. Stow loose equipment

After Deorbit Targeting complete:

2. Stow Backup PGSC
3. Remove and stow Side hatch UV filter, locking device, and pyro box safing pin
4. Tape foot loops in egress routes
5. Remove and stow Window Shades (if not needed for cab T control)

WCS DEACT

WCS 1. Foot Restraints – up, locked
ML31C 2. VAC VENT ISOL VLV CNTL – CL (tb-CL)
If EDO WCS:
WCS 3. URINAL SEL – OFF
4. WCS PWR SEL (two) – OFF1,OFF2
5. √FAN PWR – AUTO

POLE SETUP

Perform ESCAPE POLE STOWAGE/SETUP (Cue Card), then:

SEAT INSTALLATION

1. Confirm minimum ltg on Middeck
2. Unstow LOSS OF 2 FREON LOOPS D/O PREP (CONT DEORB); perform MS PAGE procs

NOTE

The COMM PWRDN and POWERUP procs on this and following pages should be used until Touchdown

COMM PWRDN

MS Pwr dn comm ASAP after comm with MCC no longer reqd. Delay 10 min max if AOS. Use COMM POWERUP, 10-67, if MCC comm reqd. Comm will be pwrd on entry by AFT PNL CONFIG FOR ENTRY COMM, MS PULLOUT PAGE (CONT DEORB, LOSS OF 2 FREON LOOPS D/O PREP) and special ENTRY MANEUVERS Cue Card

A1L	1.	S-BD PM ANT SW ELEC – OFF PRE AMP – OFF PWR AMPL STBY – OFF OPER – OFF MODE sel – STDN LO XPNDR – OFF
	2.	NSP PWR – OFF ENCRYPTION PWR – OFF (Encrypt disabled rest of flt) ENCRYPTION MODE – SEL SEL – BYP
C3	3.	S-BD PM CNTL – PNL,CMD OI PCMMU FORMAT – FXD PWR – OFF AUD CTR – OFF (pwr up as reqd for cockpit audio)
A1L	4.	√S-BD PL CNTL – PNL √PWR SYS – OFF PL DATA INTLVR PWR – OFF
A1R	5.	S-BD FM CNTL – PNL PWR – OFF
A3	6.	MON PWR (two) – OFF
A7U	7.	TV PWR CONTR UNIT – OFF
O6	8.	UHF MODE sel – OFF
	9.	MDM PL1,PL2 (two) – OFF
R12L	10.	VTR PWR – OFF
R14:B	11.	cb MNA,MNC GCILC (two) – op

Cont next page

NOTE

During each comm window, voice down cab temp, crew body temps and heart rates, per COMM POWERUP, 10-67; indicate severity of cab humidity

If after TIG-10:

12. Go to AFT PNL CONFIG FOR ENTRY COMM, MS PULLOUT PAGE (CONT DEORB, LOSS OF 2 FREON LOOPS D/O PREP)

COMM POWERUP (If comm reqd prior to landing site coverage)

```
            Pwr up audio sys:
C3              1.      AUD CTR – 1
O5                    √L AUD PWR – AUD
O9                    √R AUD PWR – AUD
            If UHF avail, config for UHF comm (voice only):
O6          |   2.      UHF MODE sel – SPLX
            |               √SPLX/EVA PWR AMPL – ON
            |   3.      After comm with MCC complete:  Go to COMM
            |           PWRDN, 10-65  >>
            If UHF site unavail or if MCC requests data
            |  (config for GSTDN(SGLS) S-BD):
C3          |   4.    √S-BD PM CNTL – PNL
A1L         |                 ANT SW ELEC – 2
            |                 MODE sel – STDN LO(SGLS)
            |                 XPNDR – 2
            |   5.      NSP PWR – 2
            |               DATA RATE XMIT – HI
            |                         RCV  – HI
            |               CODING XMIT – OFF
            |                       RCV – OFF
            |             √UPLK DATA – S-BD
C3/F9       |   6.      Sel best S-BD PM ANT
            |   If MCC requests data:
O14:B       |   :   7.      cb MNA OI MDM OF 1/2 A,3/4 A (two) – cl
O17:D       |   :   8.      SIG CONDR OA 1/2/3 – ON
            |   :   9.      MDM OA 1/2/3 – ON
C3          |   :   10.     OI PCMMU PWR – 1
O6          |   :   11.     MDM PL2 – ON
            |   :   12.     GNC I/O RESET
            |   :   At end of data transmission:
O14:B       |   :       13.     cb MNA OI MDM OF 1/2 A,3/4 A (two) – op
O17:D       |   :       14.     SIG CONDR OA 1/2/3 – OFF
            |   :       15.     MDM OA 1/2/3 – OFF
            |   :   After comm/data complete:
            |   L       16.     Go to COMM PWRDN, 10-65
            ~
```

Cont next page

If UHF site and GSTDN unavail and comm/data critical:
Config for TDRS S-BD:

CAUTION
This is a High Pwr Mode. On-time should be limited to 10 min max due to Pwr Amp Thermal constraints. A 3-min delay occurs after S-BD PM PNL/CMD before Pwr Amp is active. Uplink not affected. Proceed with selection of best antenna

C3 17. √S-BD PM CNTL – PNL
A1L 18. √ANT SW ELEC – 2
√PRE AMP – 2
√PWR AMPL OPER – 2
MODE sel – TDRS DATA
√XPNDR – 2
19. √NSP PWR – 2
√DATA RATE XMIT – HI
RCV – HI
CODING XMIT – ON
RCV – ON
√UPLK DATA – S-BD
C3/F9 20. Sel best S-BD PM ANT
If MCC requests data:
O14:B : 21. cb MNA OI MDM OF 1/2 A,3/4 A (two) – cl
O17:D : 22. SIG CONDR OA 1/2/3 – ON
: 23. MDM OA 1/2/3 – ON
C3 : 24. OI PCMMU PWR – 1
O6 : 25. MDM PL2 – ON
: 26. GNC I/O RESET
: At end of data transmission:
O14:B : 27. cb MNA OI MDM OF 1/2 A,3/4 A (two) – op
O17:D : 28. SIG CONDR OA 1/2/3 – OFF
L 29. MDM OA 1/2/3 – OFF
After comm/data complete:
30. Go to COMM PWRDN, 10-65

LOSS OF FES

MS Perform MS PWRDN, 10-71, immed

C3
1. √MSTR MADS PWR – OFF
2. Minimize ltg
3. Use one PGSC, and one IDP/CRT with two MDUs only as reqd

If FLT CNTLR PWR not reqd:

O14,O15, O16:E
4. cb DDU L,R,AFT (six) – op

If not in deorb prep:

O7
5. √GPS 1,3 PWR (two) – OFF
√PRE AMPL (four) – OFF

O8
6. √RDR ALTM (two) – OFF
7. √MLS (three) – OFF
8. Perform PL PWRDN, then:

L1
9. CAB TEMP CNTLR – OFF
10. H2O LOOP 2 BYP MODE – MAN
MAN – DECR (hold 30 sec)
PUMP LOOP 1 (two) – OFF, B
11. √FLOW PROP VLV LOOP tb (two) – ICH
12. √TOP EVAP HTR NOZ L,R (two) – OFF
√DUCT sel – OFF
13. √HI LOAD DUCT HTR sel – OFF

L2
14. √NWS – OFF
15. √ANTISKID – OFF

L4:L
16. cb CAB T CNTLR 1,2 (two) – op

R2
17. BLR CNTLR/HTR (three) – OFF

MMU 2 deact:

18. SM 1 DPS UTILITY
√MMU ASSIGN 1 SM – ITEM 3 EXEC

O15:F
MMU 2 – OFF

If IMU ALIGN not reqd, mnvr to tail Sun att:

19. GNC UNIV PTG

TGT ID	– ITEM 8	+4 EXEC
BODY VECT	– ITEM 14	+5 EXEC
P	– ITEM 15	+1 8 4 EXEC
Y	– ITEM 16	+0 EXEC
OM	– ITEM 17	+9 0 EXEC ($\beta < 0$)
		+2 7 0 EXEC ($\beta > 0$)
START TRK	– ITEM 19	EXEC

20. Confirm MS pwrdn activities complete, then:

For deorbit prep:

21. Go to LOSS OF FES (CONT DEORB)

This Page Intentionally Blank

MS PULLOUT PAGE

MS2 Deploy rads, RAD DEPLOY (ORB OPS, ECLS)
MS1 Perform pwrdn below

MS PWRDN

	1.	Minimize ltg
O14, O15, O16:A	2.	√BRAKES (three) – OFF
O14 O15, O16:E	3.	√cb ADTA (four) – op
O14:B	4.	MSN TIMER FWD – op EVENT TIMER AFT – op
O15:B	5.	MSN TIMER AFT – op EVENT TIMER FWD – op
A1L	6.	PL DATA INTLVR PWR – OFF
A12	7.	APU HTR LUBE OIL LN (three) – OFF
	8.	HYD HTR (eight) – OFF
A14	9.	RCS/OMS HTR FWD RCS – OFF L,R POD (four) – OFF OMS CRSFD LN (two) – OFF
R14:D :E	10.	cb TV (fifteen) – op CAMR (six) – op
A3	11.	MON 1,2 PWR (two) – OFF
ML31C	12.	VAC VENT NOZ HTR – OFF
		If Manned Mnvr Unit is pwrd:
ML86B:D	13.	cb MNA,MNB STBD HTR A,B (two) – op PORT HTR A,B (two) – op
MD44F	14.	Cab temp cntl act link – pin to FULL COOL

This Page Intentionally Blank

AV BAY FIRE

AV BAY 1

NOTE

While performing proc, note any cbs open.

Equipment still pwrd in Av Bay following pwrdn:

FPCA 1	MDM OF1
FLCA 1	DSC OF1
IMU FAN	ACCU

If docked with ISS, proc results in loss of Lo Z Translation.

If no active GNC GPC: Perform GNC RECOVERY VIA G2FD (DPS), 3-12, concurrent with remainder of this proc

R1 1. cb AC CONTR AC1 (three) – cl
2. INV/AC BUS 1 – OFF (tb-OFF)
INV PWR 1 – OFF (tb-OFF)
3. cb AC CONTR AC1 (three) – op
4. Perform FC1 SHUTDN, except PWRDN (Cue Card), then:

L1 5. √AV BAY 1 FAN A,B (two) – OFF
6. FREON PUMP LOOP 2 – A
7. AV BAY 3 FAN A – ON
B – OFF

C3 8. OI PCMMU FORMAT – FXD
PWR – 2
9. BFC CRT DISP – ON

O6 10. √GPC PWR 5 – ON
√OUTPUT 5 – NORM
MODE 5 – STBY (tb-RUN), RUN
11. 4 – STBY (tb-bp), HALT
PWR 4 – OFF

If GNC RECOVERY VIA G2FD (DPS), 3-12, performed:
12. Go to step 15

If Single G2 GPC OPS:
13. Perform G2 SET EXPANSION, target Dual G2 (ORB OPS, DPS), then:

If/when in Multiple GPC OPS:
14. Reassign strings to GPC 2 in MC 2
GNC 0 GPC MEMORY

Cont next page

CRT CONFIG – ITEM 1 +2 EXEC
Modify MC 2 per table – – – →
DOWNLIST GPC – ITEM 44
+2 EXEC
GNC, OPS 201 PRO

CONFIG GPC		2 02000
STR	1	2
	2	2
	3	2
	4	2
PL	1/2	0
CRT	1	2
	2	2
	3	0
	4	2
L	1	0
	2	0
MM	1	2
	2	2

O6 15. GPC MODE 1(3) – STBY
(tb-bp)
– HALT
PWR 1 – OFF
16. MDM FF1 – OFF
PL1 – OFF
17. Perform PL PWRDN, then:
O7 18. √GPS 1 PWR – OFF
√PRE AMPL
(two) – OFF
O8 19. √RDR ALTM 1 – OFF
20. √MLS 1 – OFF
21. GNC 23 RCS
CRT RCS FWD – ITEM 1 EXEC (*)
MANF VLVS STAT OVRD – ITEM 41 EXEC –
CL (MANF 2)
O13:A 22. cb ESS 1BC AC1 SNSR – op
:E 3AB GPC STAT – op
O14:A 23. √BRAKES MNA – OFF
:E 24. cb MNA RDR ALTM 1 – op
MLS 1 – op
√ADTA 1 – op
√ACCEL 1 – op
:F 25. MMU 1 – OFF
26. RJDF 1B F1 LOGIC – OFF
DRIVER – OFF
O15:F 27. RJDF 1A F2 LOGIC – OFF
DRIVER – OFF
28. √ACCEL 4 – OFF
O16:A 29. √BRAKES MNC – OFF
:E 30. √cb MNC ADTA 3 – op
A1R 31. PL DATA INTLVR PWR – OFF
32. S-BD PL CNTL – PNL,CMD
MA73C:A 33. MCA LOGIC MNA FWD 1 – OFF
AW18H 34. √PWR/BATT CHGR EMU 1,2 BUS SEL (two) – OFF
A12 35. HYD CIRC PUMP PWR 1 – MNB
2 – MNC
3 – MNA

Cont next page

L4:G 36. cb AC2 ΦA,ΦB,ΦC AV BAY 1 FAN B (three) – op

37. Perform MAL, EPS SSR-110, BUS LOSS: AC1, except:

L1 √AV BAY 1 FAN A,B (two) – OFF, then:

38. Reassign SM into GPC 3, per MAL, DPS SSR-4, SM REASSIGNMENT

39. Perform LOAD PCMMU FORMAT, using TFL 161/103 (ORB OPS FS, COMM/INST), then:

C3 40. BFC CRT DISP – OFF

SEL – 3+1

Check all IDPs deassigned from BFS

O6 GPC MODE 5 – STBY,HALT (tb-bp)

√OUTPUT 5 – NORM

For deorb prep:

If orbit 3 deorbit:

41. Go to LAUNCH DAY DEORBIT PREP (ORBIT 3) (CONT DEORB) >>

42. Perform MAL, ECLS SSR-12, AV BAY FIRE RECOVERY/RECONFIG, Checkout and Recovery, then:

For deorb prep:

If orbit 7 deorbit:

43. Perform P&I nominal POST INSERTION, DEORB PREP (POST INSERT, ORBIT 7 D/O), then:

44. Go to AV BAY FIRE (DEORB PREP, CONTINGENCY DELTAS)

This Page Intentionally Blank

AV BAY 2

NOTE

While performing proc, note any cbs open.

Equipment still pwrd in Av Bay following pwrdn:

FPCA 2 MDM OF2
FLCA 2 DSC OF2
BFC 3A (When GPC 3 is powered).

If docked with ISS, proc will require ISS to control mated attitude or result in loss of mated attitude control. Proc also results in loss of Lo Z Translation

R1 1. cb AC CONTR AC2 (three) – cl
2. INV/AC BUS 2 – OFF (tb-OFF)
INV PWR 2 – OFF (tb-OFF)
3. cb AC CONTR AC2 (three) – op
4. Perform FC2 SHUTDN, except PWRDN (Cue Card), then:
L1 5. IMU FAN A(C) – ON
B – OFF
6. AV BAY 1 FAN A – ON
B – OFF
7. FREON PUMP LOOP 1 – A
8. √CAB FAN A – ON
√B – OFF
9. √AV BAY 2 FAN A,B (two) – OFF
C3 10. √OI PCMMU PWR – 1
A1L 11. √S-BD PM MODE sel – TDRS DATA
√NSP DATA RATE XMIT – HI
√RCV – HI
√CODING XMIT – ON
√RCV – ON
√PWR – 1
√UPLK DATA – S-BD
C3 12. S-BD PM CNTL – PNL,CMD

Cont next page

REASSIGN STRINGS TO GPC 1 IN MC 2

	13.	GNC 0 GPC MEMORY
CRT		CONFIG – ITEM 1 +2 EXEC
		Modify MC 2 per table – – – →
	14.	GNC, OPS 201 PRO
O6	15.	GPC MODE 2 – STBY(tb-bp)
		– HALT
		PWR 2 – OFF
		√MODE 5 – HALT
		√OUTPUT 5 – NORM
		√PWR 5 – OFF
	16.	MDM FF2,FF4 (two) – OFF
		PL2 – OFF
	17.	Perform PL PWRDN, then:
O8	18.	√RDR ALTM 2 – OFF
	19.	√MLS 2,3 (two) – OFF
O13:C	20.	cb ESS 2CA AC2 SNSR – op
O15:A	21.	√BRAKES MNB – OFF
:E	22.	cb MNB RDR ALTM 2 – op
		MLS 2 – op
		√ADTA 2 – op
		√ACCEL 2 – op
:F	23.	MMU 2 – OFF
O14,O15, O16:F	24.	√RJDA LOGIC,DRIVER (eight) – ON
	25.	GNC 20 DAP CONFIG – sel tail only
		P,Y OPTION – ITEM 15,16 EXEC (TAIL)
		– ITEM 35,36 EXEC (TAIL)
	26.	DAP: PRI
O16:A	27.	√BRAKES MNC – OFF
:E	28.	cb MNC MLS 3 – op
		√ADTA 4 – op
:F	29.	RJDF 2A F3 LOGIC – OFF
		DRIVER – OFF
		2B F4/F5 LOGIC – OFF
		F4 DRIVER – OFF
	30.	√ACCEL 3 – OFF
	31.	RJD MANF L5/F5/R5 DRIVER – OFF
A1L	32.	S-BD PL PWR SYS – OFF
		CNTL – PNL,CMD

CONFIG		2
GPC		10000
STR	1	1
	2	1
	3	1
	4	1
PL	1/2	0
CRT	1	1
	2	1
	3	0
	4	1
L	1	0
	2	0
MM	1	1
	2	1

Cont next page

A12 33. √HYD CIRC PUMP PWR 1 – MNA
2 – MNB
3 – MNC

MA73C:A 34. MCA LOGIC MNB FWD 2 – OFF

L4:H 35. cb AC3 AV BAY 2 FAN B (three) – op

36. Perform MAL, EPS SSR-120, BUS LOSS: AC2, except:

L1 √AV BAY 2 FAN A,B (two) – OFF, then:

37. Reassign BFS into GPC 3, per MAL, DPS SSR-7, GPC IPL MENU OPTION (PASS/BFS)

For deorb prep:

If orbit 3 deorbit:

38. Go to LAUNCH DAY DEORBIT PREP (ORBIT 3) (CONT DEORB) >>

39. Perform MAL, ECLS SSR-12, AV BAY FIRE RECOVERY/RECONFIG, Checkout and Recovery, then:

For deorb prep:

If orbit 7 deorbit:

40. Perform Deltas to nominal POST INSERTION, DEORB PREP (POST INSERT, ORBIT 7 D/O), then:

41. Go to AV BAY FIRE (DEORB PREP, CONTINGENCY DELTAS)

This Page Intentionally Blank

AV BAY 3A

NOTE

While performing proc, note any cbs open.

Equipment still pwrd in Av Bay following pwrdn:

FPCA 3 MDM OF3 GCIL
FLCA 3 DSC OF3
Active comm sys equipment
S-BD PWR-AMP stby (alt sys)

R1 1. cb AC CONTR AC3 (three) – cl
2. INV/AC BUS 3 – OFF (tb-OFF)
INV PWR 3 – OFF (tb-OFF)
3. cb AC CONTR AC3 (three) – op
4. Perform FC3 SHUTDN, except PWRDN (Cue Card), then:

L1 5. AV BAY 3 FAN A,B (two) – OFF
6. CAB FAN B – ON
A – OFF

L4:F 7. cb AC1 H2O LOOP PUMP 1A/2 (three) – cl
L1 H2O PUMP LOOP 1 – ON
2 – GPC

If Triple G2:

CRT 8. CONFIG – ITEM 1 +2 EXEC
Modify MC 2 per table – – – →
9. GNC, OPS 201 PRO

O6 10. √GPC MODE 3 – HALT
√OUTPUT 3 – NORM
√PWR 3 – OFF
11. MDM FF3 – OFF

O7 12. √GPS 3 PWR – OFF
√PRE AMPL – OFF

O13:A :C 13. cb ESS 1BC C/W A – op
2CA C/W B – op
(all SM tones and C/W lights and tones lost; CRT FAULT SUMM and SM ALERT light remains)

O13:E 14. cb ESS 3AB AC3 SNSR – op
15. Perform LOSS OF VERNIERS (ORB OPS, RCS) while continuing with pwrdn, then:

CONFIG		2
GPC		12000
STR	1	1
	2	2
	3	1
	4	2
PL	1/2	0
CRT	1	1
	2	2
	3	0
	4	1
L	1	0
	2	0
MM	1	1
	2	2

Cont next page

If comm not working:

A1L 16. √S-BD PM MODE sel – TDRS DATA
√NSP DATA RATE XMIT – HI
√RCV – HI
√CODING XMIT – ON
√RCV – ON
√PWR – 1
√UPLK DATA – S-BD

C3 17. S-BD PM CNTL – PNL,CMD

If comm still not working:

18. S-BD PL CNTL – PNL
PWR SYS – OFF

A1L 19. PL DATA INTLVR PWR – OFF

C3 20. S-BD PM CNTL – PNL

A1L ANT SW ELEC – OFF
PRE AMP – OFF
PWR AMPL STBY – OFF
OPER – OFF
XPNDR – OFF

21. NSP PWR – OFF
ENCRYPTION PWR – OFF

MA73C:A 22. MCA LOGIC MNC FWD 3 – OFF

NOTE

If comm presently working, performing a PNL,CMD may result in loss of comm (if fire has aff alt comm sys)

L4:H 23. cb AC1 AV BAY 3 FAN B (three) – op

24. Perform MAL, EPS SSR-130, BUS LOSS: AC3, except:
L1 √AV BAY 3 FAN A,B (two) – OFF, then:

For deorb prep:

If orbit 3 deorbit:

25. Go to LAUNCH DAY DEORBIT PREP (ORBIT 3) (CONT DEORB, LAUNCH DAY ORBIT 3) >>

26. Perform MAL, ECLS SSR-12, AV BAY FIRE RECOVERY/RECONFIG, Checkout and Recovery, then:

For deorb prep:

If orbit 7 deorbit:

27. Perform Deltas to nominal POST INSERTION, DEORB PREP (POST INSERT, ORBIT 7 D/O), then:

28. Go to AV BAY FIRE (DEORB PREP, CONTINGENCY DELTAS)

PRIORITY PWRDN PROCEDURES

(And Mission Specific Pwrdns)

1. Letter coded priority pwrdns are for mission specific operations.
   Group A (normal) is standard sw list config for on-orbit operations.
   Group B (LOW LEVEL) and Group C (MSN EXT) are specialized pwrdns.
   Group B (with A) comprises a nonstandard avionics config to be used nominally on power-critical missions not normally involving payload deploys, rendezvous, proximity, or RMS operations.
   Group C (with A) will be implemented, if reqd, during mission extension days.

   Activities not consistent with Group B and C Pwrdns are:

   LOW LEVEL CONFIG (Group B)

   a. OMS BURNS
   b. FCS CHECKOUT
   c. NOMINAL OPS TRANSITIONS (i.e., not reqd for troubleshooting)
   d. DEORB PREP
   e. DTOs

   MISSION EXT (Group C)

   f. OMS BURNS
   g. FCS CHECKOUT
   h. OPS TRANSITIONS
   i. CIRC PUMP OPS
   j. APU OPS
   k. PLBD OPS
   l. KU BAND OPS
   m. PAYLOAD OPS
   n. DEORB PREP
   o. DTOs

   Pwrup for any of the activities listed above will be accomplished using the B or C Pwrdns in reverse order.

2. Numbered priority pwrdn procs are for contingency use, and are listed according to operational criticality, higher numbers resulting in greater power reduction. Usage of any numbered pwrdn assumes sequential inclusion of all lower numbered procs.

3. The loads for the major power users are presented below.

4. Use PWRUP column in reverse order to back out of numbered priority pwrdns.

PRIOR PWRDN

Equipment	dc Watts (Avg)	Pnl
MADS – ASCENT/ENTRY	305	C3
– ORBIT	128	
LTG PNL (L OVHD, L CTR)	654	O6
LTG PNL (R OVHD, R)	396	O8
LTG INST (L/CTR, OVHD)	108	O6
LTG INST (R)	63	O8
GPC (RUN)	560	O6
GPC (HALT)	56	O6
IDP	55	C2
MDU	66	R14:A
ADC	3.7	R14:A
FLT CNTLR PWR	10	F7,F8
ADI/DDU	129	O14,O15, O16:E
TACAN – SEARCH	75	O7
– TRACK	50	
MLS	55	O14,O15, O16:E
GPS	25.2	A13
RA	23	O8
HUD	245	F3
IMU – OPER	119	O14,O15, O16:A
– STBY	55	
FREON LOOP PUMP	467	L1
H2O PUMP LOOP	258	L1
FES HTRS – (FES OFF)	222	L1
– (FES ON)	600	
ACIP htr	50	A7U

PRIORITY PWRDN GROUP A

PNL	GRP A PWRDN (normal)	PWRUP
	Nominal on-orbit config:	(1)
	1. Lights – OFF except when needed	
O14, O15, O16:A	2. BRAKES (three) – OFF	
:E	3. cb ADTA (four) – op	
	If ASA – ON:	
C3	4. Sequence FCS CH (four) – OFF rapidly, then:	
O14, O15, O16:F	5. ASA (four) – OFF	
O17:A	6. ATVC (four) – OFF	
:B	7. EIU (three) – OFF	
:D	8. MEC (two) – OFF	
O7	9. TACAN MODE sel (three) – OFF	
O8	10. RDR ALTM (two) – OFF	
	11. MLS (three) – OFF	
L1	12. HI LOAD DUCT HTR sel – OFF	
L2	13. ANTISKID – OFF	
F6,F8	14. FLT CNTLR PWR (two) – OFF	
A12	15. APU HTR TK/FU LN/H2O SYS: One set – AUTO, one set – OFF	
O6	16. GPC MODE 3 – STBY (tb-bp) – HALT (tb-bp) – STBY (tb-RUN) – HALT (tb-bp) 5 – STBY (tb-RUN) – HALT (tb-bp)	
	Cont next page	

(1) As reqd per other FDF documents

PNL	GRP A	PWRDN (Cont)	(normal)	PWRUP
O6	17.	GPC MODE 2 – as reqd	(2)	(3)
O14, O15, O16:A	18.	RGA (four) – OFF		
O14, O15:E	19.	cb ACCEL 1,2 (two) – op		
O15, O16:F	20.	ACCEL 4,3 (two) – OFF		
F3	21.	HUD PWR (two) – OFF		
O14, O15, O16:E	22.	cb DDU L,R,AFT (six) – op		(5)
	23.	IDPs – three ON for crew awake MDUs – ON as desired All MDUs and IDPs OFF for crew single-shift sleep		(4)
O6	24.	UHF MODE sel – OFF		SPLX

(2) If GPC 2 not reqd, perform G2 SET CONTRACTION (ORB OPS, DPS)

(3) As reqd per FLIGHT PLAN, perform G2 SET EXPANSION (ORB OPS, DPS)

(4) Other(s) ON as reqd

(5) ON as reqd for FLT CNTLR PWR

PRIORITY PWRDN PROCEDURES
(And Mission Specific Pwrdns)

1. Letter coded priority pwrdns are for mission specific operations.
   Group A (normal) is standard sw list config for on-orbit operations.
   Group B (LOW LEVEL) and Group C (MSN EXT) are specialized pwrdns.
   Group B (with A) comprises a nonstandard avionics config to be used nominally on power-critical missions not normally involving payload deploys, rendezvous, proximity, or RMS operations.
   Group C (with A) will be implemented, if reqd, during mission extension days.

   Activities not consistent with Group B and C Pwrdns are:

   LOW LEVEL CONFIG (Group B)
   a. OMS BURNS
   b. FCS CHECKOUT
   c. NOMINAL OPS TRANS-ITIONS (i.e., not reqd for troubleshooting)
   d. DEORB PREP
   e. DTOs

   MISSION EXT (Group C)
   f. OMS BURNS
   g. FCS CHECKOUT
   h. OPS TRANSITIONS
   i. CIRC PUMP OPS
   j. APU OPS
   k. PLBD OPS
   l. KU BAND OPS
   m. PAYLOAD OPS
   n. DEORB PREP
   o. DTOs

   Pwrup for any of the activities listed above will be accomplished using the B or C Pwrdns in reverse order.

2. Numbered priority pwrdn procs are for contingency use, and are listed according to operational criticality, higher numbers resulting in greater power reduction. Usage of any numbered pwrdn assumes sequential inclusion of all lower numbered procs.

3. The loads for the major power users are presented below.

4. Use PWRUP column in reverse order to back out of numbered priority pwrdns.

PRIOR PWRDN

Equipment	dc Watts (Avg)	Pnl
MADS – ASCENT/ENTRY	305	C3
– ORBIT	128	
LTG PNL (L OVHD, L CTR)	654	O6
LTG PNL (R OVHD, R)	396	O8
LTG INST (L/CTR, OVHD)	108	O6
LTG INST (R)	63	O8
GPC (RUN)	560	O6
GPC (HALT)	56	O6
IDP	55	C2
MDU	66	R14:A
ADC	3.7	R14:A
FLT CNTLR PWR	10	F7,F8
ADI/DDU	129	O14,O15, O16:E
MLS	55	O14,O15, O16:E
GPS	25.2	O7
RA	23	O8
HUD	245	F3
IMU – OPER	119	O14,O15, O16:A
– STBY	55	
FREON LOOP PUMP	467	L1
H2O PUMP LOOP	258	L1
FES HTRS – (FES OFF)	222	L1
– (FES ON)	600	
ACIP htr	50	A7U

PRIORITY PWRDN GROUP A

PNL	GRP A PWRDN (normal)	PWRUP
	Nominal on-orbit config:	(1)
	1. Lights – OFF except when needed	
O14,	2. BRAKES (three) – OFF	
O15,		
O16:A		
:E	3. cb ADTA (four) – op	
	If ASA – ON:	
C3	4. Sequence FCS CH (four) – OFF rapidly, then:	
O14,	5. ASA (four) – OFF	
O15,		
O16:F		
O17:A	6. ATVC (four) – OFF	
:B	7. EIU (three) – OFF	
:D	8. MEC (two) – OFF	
O7	9. GPS 1,3 PWR (two) – OFF PRE AMPL (four) – OFF	
O8	10. RDR ALTM (two) – OFF	
	11. MLS (three) – OFF	
L1	12. HI LOAD DUCT HTR sel – OFF	
L2	13. ANTISKID – OFF	
F6,F8	14. FLT CNTLR PWR (two) – OFF	
A12	15. APU HTR TK/FU LN/H2O SYS: One set – AUTO, one set – OFF	
O6	16. GPC MODE 3 – STBY (tb-bp) – HALT (tb-bp) – STBY (tb-RUN) – HALT (tb-bp) 5 – STBY (tb-RUN) – HALT (tb-bp)	
	Cont next page	

(1) As reqd per other FDF documents

PNL	GRP A PWRDN (Cont)	(normal)	PWRUP
O6	17. GPC MODE 2 – as reqd	(2)	(3)
O14, O15, O16:A	18. RGA (four) – OFF		
O14, O15:E	19. cb ACCEL 1,2 (two) – op		
O15, O16:F	20. ACCEL 4,3 (two) – OFF		
F3	21. HUD PWR (two) – OFF		
O14, O15, O16:E	22. cb DDU L,R,AFT (six) – op		(5)
	23. IDPs – three ON for crew awake MDUs – ON as desired All MDUs and IDPs OFF for crew single-shift sleep		(4)
O6	24. UHF MODE sel – OFF		SPLX

(2) If GPC 2 not reqd, perform G2 SET CONTRACTION (ORB OPS, DPS)

(3) As reqd per FLIGHT PLAN, perform G2 SET EXPANSION (ORB OPS, DPS)

(4) Other(s) ON as reqd

(5) ON as reqd for FLT CNTLR PWR

PRIORITY PWRDN GROUP B

PNL	GRP B PWRDN (LOW LEVEL)	PWRUP
	NOTE KU-BD and S-BD FM sw: As reqd to conserve energy and accomplish mission objectives, MCC will cmd	
	1. Turn off all lights except Middeck lts 6,7,8 (no lts for single-shift sleep, one for split-shift sleep)	As reqd
C3	2. MSTR MADS PWR – OFF (as reqd, cycle ON per FLIGHT PLAN)	ON
A14	3. RCS/OMS HTR L POD (two) – A AUTO, B OFF R POD (two) – A AUTO, B OFF	MCC call
GALLEY	4. H2O HTR (two), OVEN FAN – OFF (1)	ON (1)
O14, O15, O16:E	5. cb DDU L,R,AFT (six) – op	cl
	If GPC MODE 2 – RUN: 6. Perform G2 SET CONTRACTION (ORB OPS, DPS), then:	(2)
O15:F	7. MMU 2 – OFF (1 of 2 off)	ON
	8. Minimize PGSC use	
O14, O15, O16:F	9. Pri RJDF DRIVER,LOGIC (eight) – OFF	ON
	10. Pri RJDA DRIVER,LOGIC (eight) – OFF RJDA 1A L2/R2 DRIVER – ON	ON
	11. Use only one IDP with three MDUs max. All IDPs and MDUs OFF for single-shift sleep; otherwise – ON	ON
	12. GNC 21 IMU ALIGN IMU 2 STBY – ITEM 22 EXEC	(3)
	13. COLOR PRINTER – OFF	(4)

(1) Insert drink package to keep water tank pump from cycling (water temp may decrease slightly); if repowering Galley, remove drink package

(2) If reqd, go to G2 SET EXPANSION (ORB OPS, DPS)

(3) Recover IMU 2 (MAL, GNC FRP-3)

(4) MCC will instruct crew when to turn COLOR PRINTER ON

PRIORITY PWRDN GROUP C

PNL	GRP C PWRDN (MSN EXT)	PWRUP
	1. Perform PRIORITY PWRDN GROUP 1,2	
	If prior to first deorbit prep:	
	2. Perform PRIORITY PWRDN GROUP 3A, then:	
	3. Turn off all lights except two Middeck lts (use no lts for single-shift sleep or split-shift sleep)	
GALLEY	4. H2O HTR (two), OVEN FAN – OFF (1)	ON (1)
	5. MDUs: Cycle ON when reqd	
O14,	6. Pri RJDF DRIVER,LOGIC (eight) – OFF	ON
O15,	7. Pri RJDA DRIVER,LOGIC (eight) – OFF	ON
O16:F	RJDA 1A L2/R2 DRIVER – ON	
O6	8. MDM PL2 – OFF (2)	ON (3)
A14	9. RCS/OMS HTR	MCC call
	L POD (two) – A AUTO, B OFF	
	R POD (two) – A AUTO, B OFF	
A1L	10. PL DATA INTLVR PWR – OFF	MCC call
	S-BD PL PWR SYS – OFF	MCC call
	CNTL – PNL,CMD (4)	
A1R	11. FM PWR – OFF	1 (5)
	CNTL – PNL,CMD	
O6	12. √UHF MODE sel – OFF	
	13. KU-BAND SYS – max 2 hr ON/day (5)	
O14,	14. cb DDU L,R,AFT (six) – op	cl
O15,		
O16:E		
	15. COLOR PRINTER – OFF	MCC call

(1) Insert drink package to keep water tank pump from cycling (water temp may decrease slightly); if repowering Galley, remove drink package

(2) Before powering off PF2 MDM, √MCC for Antenna Electronics 1 activation

(3) SM I/O RESET

(4) If PDI and/or PSP pwrd off, expect ‘S62 BCE BYP PL’, ‘S62 BCE BYP PDI’ and/or ‘S62 BCE BYP PSP’ msgs

(5) As reqd, MCC will command

PRIORITY PWRDN GROUP 1

PNL	GRP 1 PWRDN	PWRUP
	1. Minimize ltg 2. Use only one IDP with three MDUs max If GPC 2 – RUN: 3. Perform G2 SET CONTRACTION (ORB OPS, DPS), then:	(1)
O15:F	4. MMU 2 OFF – (1 of 2 off)	ON
	5. GNC 21 IMU ALIGN IMU 2 STBY – ITEM 22 EXEC	(2)

(1) If reqd, go to G2 SET EXPANSION (ORB OPS, DPS)

(2) Recover IMU 2 (MAL, GNC FRP-3)

PRIORITY PWRDN GROUP 2

PNL	GRP 2 PWRDN	PWRUP
O6	1. S TRK PWR -Y,-Z (two) – OFF	As reqd
	2. Perform GPS PWRDN (ORB OPS, GNC) for GPS 2	(1)
	3. MDM FF2,4 (two) – OFF FA4 – OFF	ON (2)
C3	4. MSTR MADS PWR – OFF	ON
L1	5. FLASH EVAP CNTLR PRI (two) – OFF	(3)
	SEC – OFF	(4)
	TOP EVAP HTR NOZ (two) – OFF	Two ON (3)
	DUCT sel – OFF	ON
	NOTE RMS temps no longer avail on A8U; however, MCC has insight	
MA73C:F	6. cb AC1 RMS PRI ΦA – op	
A8L	7. PORT RMS HTR A(B) – OFF	
	* If PDRS PORT TEMP msg (MA tone only): * * Within 30 min, PORT RMS HTR A(B) – * * AUTO * * On MCC call: * * PORT RMS HTR A(B) – OFF; * * repeat as reqd *	
OCAC	8. Use only one orbiter PGSC If OCAC flown: 9. OCAC PWR – OFF	ON

(1) Perform GPS PWRUP (ORB OPS, GNC) for GPS 2

(2) GNC I/O RESET

(3) Perform TOPPING FES STARTUP, using Pri A/B (ORB OPS, ECLS)

(4) SEC CNTLR ON only if both primary controllers failed

PRIORITY PWRDN GROUP 3

Perform PL PWRDN

PRIORITY PWRDN 3A (PP3A) contains recoverable PL ops pwrdn steps. PRIORITY PWRDN 3B (PP3B) is a total PL pwrdn that may cause PL ops to be nonrecoverable

PRIORITY PWRDN GROUP 4

PNL	GRP 4 PWRDN	PWRUP
GALLEY	1. H2O HTR (two), OVEN FAN – OFF	ON
	If RMS pwrd:	MCC call
	2. Perform RMS PWRDN (PDRS OPS), then:	
L4:L	3. cb AC1 ΦB AV BAY 2 S/C – op	cl

PRIORITY PWRDN GROUP 5

PNL	GRP 5 PWRDN	PWRUP
O15:A	1. IMU 2 – OFF (1 of 3)	(1)
	2. GNC 20 DAP CONFIG TAIL P,Y OPTION DAP: X/AUTO/PRI	(2)
O8	3. FWD RCS MANF ISOL 1,2,3,4 (four) – CL	(3)
O6	4. MDM PL2 – OFF	ON (4)
A14	5. RCS/OMS HTR FWD RCS JET 1,2,3,4 (four) – OFF	AUTO
O14, O15, O16:F	6. RJDF DRIVER,LOGIC (eight) – OFF	ON
O14:C	7. cb UTIL PWR O19/MO52J – op	cl
O15:C	F1/MO13Q – op	cl
	8. Perform KU-BD ANT STOW (ORB OPS, COMM/INST), then:	(5)
R14:C	9. cb MNB KU ANT HTR – op	cl

(1) Recover IMU 2 (MAL, GNC FRP-3)

(2) At MCC call, sel JET OPT 1 (cont PWRUP until AOS)

(3) For PWRUP, perform MAL, RCS SSR-4, STAGED, MANF REPRESS

(4) SM I/O RESET

(5) Perform KU-BD ANT DEPLOY (ORB OPS, COMM/INST)

PRIORITY PWRDN GROUP 6

PNL	GRP 6 PWRDN	PWRUP
O14:A	1. IMU 1 – OFF (2 of 3 off)	(1)
O15:D	2. cb O2/N2 CNTLR 2 – op	cl
O16:E	3. RCS/OMS PRPLT QTY GAUGE – op	cl
L4:L	4. AC1 ΦA CAB T CNTLR 2 – op	cl
	AC2 ΦA CAB T CNTLR 1 – op	cl
	(if desired, pin CAB T CNTLRS)	
R2	5. BLR CNTLR/HTR (three) – OFF	B
A12	6. APU HTR LUBE OIL LN (three) – OFF	B AUTO
	HYD HTR A (four) – OFF	√OFF
	B (four) – OFF	AUTO
A14	7. RCS/OMS HTR OMS CRSFD LN (two) – A OFF, B OFF	ON
ML31C	8. VAC VENT NOZ HTR – OFF	As reqd
ML86B:C	9. cb MNB EXT AIRLK HTR STRUCT Z1/2/3 – op	cl
	VEST Z1/2/3 – op	cl
:A	10. cb MNA H2O LN HTR A – op	cl (2)
	MNB H2O LN HTR B – op	cl (2)
	If EDO WCS:	
WCS	11. URINAL SEL – OFF	
	WCS PWR SEL (two) – OFF1,OFF2	(3)
	√FAN PWR – AUTO	
	If MMU pwrd:	
ML86B:D	12. cb MNA MMU PORT HTR A – op	
	STBD HTR A – op	
	MNB MMU PORT HTR B – op	
	STBD HTR B – op	
MA73C	13. MCA LOGIC MNA,B,C:	
	MID 1,2,3,4 (eight) – OFF	ON
A6U	14. ANNUN BUS SEL – OFF	MNC
R14:D	15. cb MNA TV C AFT BAY CAMR HTR – op	cl
	PAN-TILT HTR – op	cl
	MNB TV A FWD BAY CAMR HTR – op	cl
	PAN-TILT HTR – op	cl
	MNC B TV B KEEL/EVA CAMR HTR – op	cl
	PAN-TILT HTR – op	cl
:E	16. cb MNB RMS PORT RMS TV CAMR HTR – op	cl
	PAN-TILT HTR – op	cl
	MNA D STBD RMS TV CAMR HTR – op	cl
	PAN-TILT HTR – op	cl
	17. Purge both supply,waste H2O lines. Go to SUPPLY(WASTE) H2O PURGE FROM DUMP LINE(S) (IFM, PROCEDURES S THRU Z)	(4)

(1) Recover IMU 1 (MAL, GNC FRP-3)

(2) One of two reqd

(3) WCS URINAL SEL – SEP 1(2)
WCS PWR SEL – AUTO1,OFF2
(OFF1,AUTO2)
√FAN PWR – AUTO
URINE DIVERTER VLV – SEP 1(2)

(4) For PWRUP, reopen SPLY(WASTE) H2O DUMP ISOL VLV

PRIORITY PWRDN GROUP 7

PNL	GRP 7 PWRDN	PWRUP
O13:D	1. cb CRYO (four) – op	cl
O14:C	2. cb MNA CRYO O2 HTR TK1 SNSR 1 – op	cl
:F	3. MMU 1 – OFF (2 of 2 off)	ON
O16:C	4. cb MNC CRYO O2 HTR TK1 SNSR 2 – op	cl
L4:K	5. cb AC1 ΦA H2O CNTLR 2 – op	cl
L1	6. FREON PUMP LOOP 2 – OFF	ON
	RAD CNTLR LOOP 2 – OFF	A
L2	O2 SYS 2 SPLY – CL (tb-CL)	OP (tb-OP)
R1	7. O2 TK1,TK2,TK3 HTRS A (three) – OFF	AUTO
	TK1,TK3 HTRS B (two) – OFF	AUTO
	H2 TK1,TK2,TK3 HTRS A (three) – OFF	AUTO
	TK1,TK3 HTRS B (two) – OFF	AUTO
	If Primary Jets Only Option:	
	8. Go to step 17	
	If Vernier Jets Only Option:	
	9. Go to step 27	
	If Gravity Gradient Option:	(1)
	10. Perform GG FREE DRIFT, ATT ID B, steps 1,2 (do not sel LO Z) (ORB OPS, RCS), then:	
O14, O15, O16:F	11. All RJD DRIVER,LOGIC (seventeen) – OFF	(2)
	12. Perform RCS SECURE (FWD,AFT) (RCS), 8-2, then:	
O6	13. MDM FF1 – OFF	ON
	FA1,FA2,FA3 (three) – OFF	ON
MA73C	14. MCA LOGIC MNA,B,C:	
	FWD 1,2,3 (three) – OFF	ON
	AFT 1,2,3 (three) – OFF	ON
A14	15. RCS/OMS HTR FWD RCS – OFF	AUTO
	RCS JET (five) – OFF	AUTO
	AFT RCS JET (five) – OFF	AUTO
	16. Go to step 31	
	Cont next page	

(1) Perform GG FREE DRIFT, step 3 (ORB OPS, RCS)

(2) Perform MAL, RCS SSR-4, STAGED, MANF REPRESS (FRCS only). √L,R MANF P > 130 prior to MANF ISOL – OP

PNL	GRP 7 PWRDN (Cont)	PWRUP
	17. Perform XFEED: L RCS to R RCS (RCS), 8-5, then:	
	18. GNC 23 RCS	OP
	Ovrd L,R,1,3,4,5 STAT – CL	
O6	19. MDM FA2 – OFF	
	FF1 – OFF	ON (3)
	20. GNC 20 DAP CONFIG	
	√TAIL P,Y OPTION	
O14:F	21. RJDA 1A L2/R2 LOGIC – ON	
	DRIVER – ON	
O14, O15, O16:F	22. (Remaining) RJD DRIVER,LOGIC (fifteen) – OFF	ON
O7	23. AFT L,R RCS MANF ISOL 5 (two) – CL	OP
O8	24. FWD RCS MANF ISOL 5 – CL	CL
A14	25. RCS/OMS HTR FWD RCS – OFF	AUTO
	RCS JET (five) – OFF	AUTO
	AFT RCS JET 1,3,4,5 (four) – OFF	AUTO
	26. Go to step 31	
O6	27. MDM FA3 – OFF	
	FF1 – OFF	
O16:F	28. √Vern RJD – ON	
O14, O15, O16:F	29. Pri RJD DRIVER,LOGIC (sixteen) – OFF	ON
A14	30. RCS/OMS HTR FWD RCS – OFF	AUTO
	RCS JET 1,2,3,4 (four) – OFF	AUTO
	AFT RCS JET 1,2,3,4 (four) – OFF	AUTO
A11	31. CRYO TK HTR (four) – OFF	MCC call
	Cont next page	

(3) GNC I/O RESET

PNL	GRP 7 PWRDN (Cont)	PWRUP
ML86B:C	32. cb EXT AIRLK HTR LN ZONE 1 (three) – op	cl
	2 (three) – op	cl
:F	33. cb CRYO O2 HTR SNSR (four) – op	cl
:G	34. All cbs – op	MCC call
	If three good FCs, shut dn FC2 and AC2 per the following:	(4)
R1	35. MN BUS TIE A,B (two) – ON (tb-ON)	
	36. Perform AC2 BUS LOSS ACTION (EPS), 5-30, only, leaving FC2 REACS open, then:	
	37. cb AC CONTR (three) – cl	op
	INV/AC BUS 2 – OFF (tb-OFF)	ON (tb-ON)
	INV PWR 2 – OFF (tb-OFF)	ON (tb-ON)
	AC BUS SNSR 2 – OFF	ON
	38. Use only IDP4, aft MDUs, and aft FLT CNTLR PWR	As reqd

(4) Perform MAL, EPS SSR-6, FC RESTART, then:
MN BUS TIE A,B (two) – OFF (tb-OFF)

CUE CARD CONFIGURATION

CUE CARDS

TARGET DATA | **LEAKING OMS PRPLT/ He BURN** | **BURN DATA**

OMS L 2 [ ]
R 3 [ ]
5 TV ROLL [ ][ ][ ]
TRIM LOAD
6 P (+) 0 . 4
7 LY (+) 5 . 2
8 RY (-) 5 . 2
9 WT [ ][ ][ ]
10 TIG * [ ] / [ ][ ] : [ ][ ] : [ ][ ] . [ ]

* Current MET + 10 min

BURN ATT
24 R [ ][ ][ ]
25 P [ ][ ][ ]
26 Y [ ][ ][ ]
ΔVTOT [ ][ ][ ] . [ ]
TGO [ ][ ] : [ ][ ]
VGO X ( ) [ ][ ][ ] . [ ][ ]
Y ( ) [ ][ ][ ] . [ ][ ]
Z ( ) [ ][ ][ ] . [ ][ ]

TGT PEG 7

	OUT-OF-PLANE	RETROGRADE
19 ΔVX	( ) [ ][ ] 0 . 0	(-) [ ][ ][ ] . [ ]
20 ΔVY	( ) 5 0 0 . 0	( ) [ ][ ] 0 . 0
21 ΔVZ	( ) [ ] 0 . 0	( ) [ ][ ] 0 . 0

TGT HA [ ][ ][ ] HP ( ) [ ][ ]

√MM202•• (302)••
√ENG SEL

√CNTLR PWR (two) – ON
√ADI – REF/HI (LVLH/HI)

√ATT
√DAP – AUTO•• (AUTO/DISC)••

If retrograde burn: √TGT HP = 95±1; adjust ΔVX as reqd
Enter TGO + 10 sec

TIG-2 Selected OMS ENG – ARM/PRESS

> WARNING
> Do not burn if: OMS He TK P < 640
> FU ENG IN P < 216
> OX ENG IN P < 151
> Payload/RMS not berthed or stowed

-:15 EXEC, and if PRPLT LEAK, THC + X
:00 TIG•• (√Pc, ΔVTOT, ENG VLV)
+:01 Release THC
If PRPLT LEAK, when CUR HP = 95±1 or Pc < 80:
OMS ENG – OFF; secure aff OMS
If He LEAK, when CUR HP = 95±1 or OMS He TK P < 640 or OMS QTY < 39 OMS ENG – OFF
If reqd, repeat proc to burn OUT-OF-PLANE; start in step 6 (if ENT PKT, start in step 5)

* On MCC call: *
* If PER ADJ TIG < four orbits from Deorb TIG, FRCS *
* QTY > 6%, and ΔVTOT > 10 fps at OMS fail, mnvr to *
* -X ATT (pitch up at 3°/sec to VGOz = 1/4 ΔVTOT): *
* THC -X to CUR HP = 95 or FRCS PRPLT deplete *

CUTOFF••
+:02 OMS ENG – OFF•• (if < three IMU, at [ ]:[ ][ ])

OPCL-1a/O/G

(reduced copy)

TOP
BACK OF ‘LEAKING OMS PRPLT/He BURN’

HOOK VELCRO

HOOK VELCRO

OPCL-1b/O/B

(reduced copy)

FAB USE ONLY CC 12-3 OPCL/ALL/GEN M

TOP

HOOK
VELCRO

HAZARDOUS SPILL RESPONSE – ORBITER

LEVEL 4 (RED) MOST HAZARDOUS SPILL (NONCONTAINABLE)

1. Inform other crew, MCC – "Level 4 spill in cabin"
2. All crew don/activate QDMs
3. QDM Regulator mode – EMERGENCY (red knob cw)

If Booster Fan active:

MO13Q 4. AIRLK FAN A(B) – OFF, then:

If hatches to ISS open:

5. Simo, perform JOINT EMERGENCY EGRESS (Cue Card), continue with this proc

L1 6. CAB TEMP sel – COOL

WCS 7. MODE – COMMODE/MANUAL/EMU

8. COMMODE CNTL – PULL UP (wait 15 sec), PUSH FWD

OCAC 9. √OCAC PWR – ON

10. √MCC

RED

LEVEL 3 (ORANGE) HAZARDOUS SPILL (CONTAINABLE)

1. Inform other crew, MCC – "Level 3 spill in cabin"
2. All crew don/activate QDMs
3. QDM Regulator mode – EMERGENCY (red knob cw)

If Booster Fan active:

MO13Q 4. AIRLK FAN A(B) – OFF, then:

If hatches to ISS open:

5. Simo, perform JOINT EMERGENCY EGRESS (Cue Card), continue with this proc

L1 6. CAB FAN A(B) – OFF (max 30 min)

7. IMU FAN B(A,C) – OFF (max 90 min)

OCAC 8. OCAC PWR – OFF

CCK 9. Cleanup crew don Silver Shield Gloves, clean up spill w/Dry Wipes. Bag, label, stow in Wet Trash

If cleanup fails, perform steps 13 and 14, then go to Level 4 step 6 >>

10. QDM Regulator mode – NORM (red knob ccw)
11. Doff Quick Don Masks, gloves. Stow gloves in Wet Trash
12. Inform other crew, MCC – "Spill in cabin cleaned up"

L1 13. CAB FAN A(B) – ON

14. IMU FAN B(A,C) – ON

OCAC 15. OCAC PWR – ON

If Booster Fan in bypass config >>

MO13Q 16. AIRLK FAN A(B) – ON

ORANGE

HOOK
VELCRO

OPCL-2a/O/L

(reduced copy)

TOP
BACK OF 'HAZARDOUS SPILL RESPONSE – ORBITER'

HOOK VELCRO

HAZARDOUS SPILL RESPONSE – ORBITER

LEVEL 2 (YELLOW) HAZARDOUS SPILL
LEVEL 1 (BLUE) LEAST HAZARDOUS SPILL
LEVEL 0 (GREEN) NONHAZARDOUS SPILL

	1. Inform other crew, MCC – "Level 2(1,0) spill in cabin"
	If Level 2 spill:
CCK	2. Cleanup crew in vicinity don goggles, masks, and gloves (√MCC for Silver Shield or latex)
	If Level 1 spill:
CCK	3. Cleanup crew in vicinity don goggles, masks, latex gloves
	If Level 0 controlled spill, >>
	If Booster Fan active:
MO13Q	4. AIRLK FAN A(B) – OFF, then:
L1	5. CAB FAN A(B) – OFF (max 30 min)
	6. IMU FAN B(A,C) – OFF (max 90 min)
OCAC	7. OCAC PWR – OFF
CCK	8. Clean up spill w/Dry Wipes. Bag, label, stow in Wet Trash
	If Level 2(1,0) cleanup fails, perform steps 11 and 12, then go to Level 4 step 5 >>
	9. As reqd, doff goggles, masks, gloves. Stow gloves in Wet Trash
	10. Inform other crew, MCC – "Spill in cabin cleaned up"
L1	11. CAB FAN A(B) – ON
	12. IMU FAN B(A,C) – ON
OCAC	13. OCAC PWR – ON
	If Booster Fan in bypass config >>
MO13Q	14. AIRLK FAN A(B) – ON

YELLOW

HOOK VELCRO

OPCL-2b/O/J

(reduced copy)

FAB USE ONLY CC 12-5 OPCL/ALL/GEN M

FIRE/SMOKE (ASCENT/ENTRY) (AESP-7a), front of FIRE/SMOKE (ORBIT) appears in the ASCENT/ENTRY SYSTEMS PROCEDURES

TOP
BACK OF 'FIRE/SMOKE'

HOOK VELCRO

FIRE/SMOKE (ORBIT)

SM SYS SUMM 1

If **VISUAL SMOKE/FIRE**, or
- two SMOKE DETN lt on, or
- two CONC > 2, or
- one SMOKE DETN lt on and other CONC > 2:
  1. Go to step 6

If single Av Bay SMOKE DETN A(B) lt and assoc CONC > 2:
  2. SMOKE DETN CKT TEST – B(A) (25 sec)

  If SMOKE DETN B(A) test good (lt on):
    3. SMOKE DETN CKT TEST – OFF
    4. SMOKE DETN SNSR – RESET >>

  If SMOKE DETN B(A) test bad (no lt):
    5. Go to step 6

If none of above >>

6. AIRLK FAN A(B) – OFF
7. If DOCKED: Perform JOINT EMERGENCY EGRESS (Cue Card)
   Spacehab: Don SEBs, perform SH EMERGENCY EGRESS (Cue Card)
8. Don Quick Don Masks
   LEH O2 vlvs – OP
   √SUPPLY vlv – OP

If **AV BAY FIRE**:
  9. FIRE SUPPR – ARM
     pb – DISCH (push until lit)
  10. AV BAY FAN (two) – OFF
  11. Simo, go to POST-FIRE CABIN CLEANUP (ORB PKT, ECLS) and AV BAY FIRE (ORB PKT, PWRDN)

If **CABIN FIRE**:
  12. CAB FAN A,B (two) – OFF (max 20 min)
  13. Locate source
  14. Unpwr source of smoke

  If smoke persists or source cannot be unpwrd:

  WARNING
  Discharge is propulsive

  15. Discharge handheld FIRE EXTGHR
16. Go to POST-FIRE CABIN CLEANUP (ORB PKT, ECLS)

replace side tab with clear tape and Hook Velcro

ALARM SEQUENCE	SOURCE AREA
L(R) FLT DK or L(R) FLT DK → CABIN	PS(MS), L(R) CONSOLE
L FLT DK ↔ R FLT DK	AFT FLT DK, MIDDECK
CABIN or CABIN → L FLT DK, CABIN → R FLT DK, L FLT DK ↔ R FLT DK	FWD FLT DK, WCS, LEB

HOOK VELCRO

OPCL-7b(AESP-7b)/A,O,E/K

BOTTOM
MATE TOP-TO-BOTTOM;
FLIP VERTICALLY TO TURN

(reduced copy)

TOP

ODS VOLUME FIRE/SMOKE

ODS

MO13Q 1. AIRLK FAN A(B) – OFF

If hatches open to ISS, perform JOINT EMERGENCY EGRESS (Cue Card), then:

A7L 2. APDS PWR (three) – OFF

3. √A,B,C lts (three) – OFF

4. HTRS/DCU PWR (three) – OFF

5. CNTL PNL PWR (three) – OFF

A6L 6. PSU PWR (two) – OFF

7. SYS PWR MNA,MNB (two) – OFF (hold 5 sec)

√SYS PWR SYS1,SYS2 tb (two) – OFF

If SH HATCH flown:

SH Hatch 8. Close SH HATCH per decal

√Equal vlvs (two) – OFF, caps installed

Tnl Adp 9. PL ISOL vlv – CL, install cap in flex duct

Inner Hatch 10. Close INNER HATCH per decal

√Equal vlvs (two) – OFF, caps installed

11. On MCC call, go to ODS POST-FIRE ACTIONS (ECLS)

OPCL-3a/ODS/O/I

TOP

BACK OF 'ODS VOLUME FIRE/SMOKE'

HOOK VELCRO

ODS

OPCL-3b/ODS/O/E

(reduced copy)

This Page Intentionally Blank

Space Shuttle Program
FLIGHT DATA FILE

JSC-48033
GENERIC, REV M

AESP:	MM101
APCL:	MM104
OPCL:	MM106
EPCL:	MM301
AESP:	MM304

ORBIT POCKET CHECKLIST

OV
ALL

Flight Cover (trim bottom to expose tabs)