Space Shuttle Program
FLIGHT DATA FILE

JSC-48023

EVA Checklist

Mission Operations Directorate
EVA, Robotics, and Crew Systems Operations Division

Generic, Rev H
March 4, 2005

NOTE
For STS-114 and subsequent (chronological) flights per current schedule.

National Aeronautics and
Space Administration

Lyndon B. Johnson Space Center
Houston, Texas

Verify this is the correct version for the pending operation (training, simulation or flight).
Electronic copies of FDF books are available. URL: http://mod.jsc.nasa.gov/do3/FDF/index.html

EVA CHECKLIST	GENERIC, REV H (Mar 4, 2005)

PCN-11 (Sept 28, 2007) Sheet 1 of 1

List of Implemented Change Requests (482s):

EVA-1754 MULTI-1806

NOTE
For STS-120 and subsequent flights

Incorporate the following:

1. Replace iii thru vi
2. Replace 3-3 and 3-4, 3-7 and 3-8
3. Replace 4-5 and 4-6, 4-9 and 4-10
4. Replace 10-1 and 10-2, 10-11 and 10-12
   After 10-12, add 10-13 and 10-14
5. Replace 12-7 and 12-8, 12-19 thru 12-22

Prepared by: Pat S Bohn
Book Manager

Approved by: Tricia K. Mack
Lead, EVA Systems Group

Dina Cabellero
Lead, EVA Task Group

Accepted by: Tricia K. Mack
for Angela Prince, Chief, EVA and Crew Systems Operations Branch

Encl: 24 pages

File this PCN immediately behind the front cover as a permanent record

EVA CHECKLIST	GENERIC, REV H (Mar 4, 2005)

PCN-10 (July 18, 2007) Sheet 1 of 1

List of Implemented Change Requests (482s):

EVA-1753

NOTE
For STS-118 and subsequent flights

Incorporate the following:

1. Replace iii and iv
2. Replace 4-5 and 4-6, 4-9 and 4-10
3. Replace 12-7 and 12-8, 12-19 thru 12-22

Prepared by: _____
Book Manager

Approved by: _____
Lead, EVA Systems Group

_____
Lead, EVA Task Group

Accepted by: _____
Chief, EVA and Crew Systems Operations Branch

Encl: 12 pages

File this PCN immediately behind the front cover as a permanent record

EVA CHECKLIST	GENERIC, REV H (Mar 4, 2005)

PCN-9 (June 15, 2007) Sheet 1 of 1

List of Implemented Change Requests (482s):

EVA-1749 MULTI-1787
EVA-1750
EVA-1751
EVA-1752

NOTE
For STS-118 and subsequent flights

Incorporate the following:

1. Replace iii thru vi
2. Replace 1-3 thru 1-10
3. Replace 4-5 and 4-6
4. Replace 8-1 and 8-2
   After 8-6, add 8-7 and 8-8
5. Replace 10-7 and 10-8

Prepared by: _____
Book Manager

Approved by: _____ FOR TRICIA MAEK
Lead, EVA Systems Group

_____ for Randy McDaniel
Lead, EVA Task Group

Accepted by: _____
Chief, EVA and Crew Systems
Operations Branch

Encl: 20 pages

File this PCN immediately behind the front cover as a permanent record

EVA CHECKLIST	GENERIC, REV H (Mar 4, 2005)

PCN-8 (May 22, 2007) Sheet 1 of 1

List of Implemented Change Requests (482s):

EVA-1747
EVA-1748

NOTE
For STS-117 and subsequent flights

Incorporate the following:

1. Replace iii and iv
2. Replace 9-3 thru 9-6
3. Replace 10-7 thru 10-10

Prepared by: _____
Book Manager

Approved by: _____
Lead, EVA Systems Group

_____ for Randal McDaniel
Lead, EVA Task Group

Accepted by: _____
Chief, EVA and Crew Systems Operations Branch

Encl: 10 pages

File this PCN immediately behind the front cover as a permanent record

EVA CHECKLIST	GENERIC, REV H (Mar 4, 2005)

PCN-7 (Feb 20, 2007) Sheet 1 of 1

List of Implemented Change Requests (482s):

EVA-1742
EVA-1743
EVA-1744
EVA-1745
EVA-1746

NOTE
For STS-117 and subsequent flights

Incorporate the following:

1. Replace iii thru vi
2. Replace 3-1 and 3-2, 3-7 thru CC 3-10
3. Replace 4-7 thru 4-10
4. Replace section 8 (6 pages)
5. Replace section 9 (6 pages)
6. Replace 10-1 and 10-2
   After 10-4, add 10-4a and 10-4b
   Replace 10-11 and 10-12

Prepared by: Paul S Bohn
Book Manager

Approved by: Tricia K. Mack
Lead, EVA Systems Group

Karina Shook
Lead, EVA Task Group
for Randall McDaniel

Accepted by: [illegible]
Chief, EVA and Crew Systems
Operations Branch

Encl: 32 pages

File this PCN immediately behind the front cover as a permanent record

EVA CHECKLIST	GENERIC, REV H (Mar 4, 2005)

PCN-6 (Nov 10, 2006) Sheet 1 of 1

List of Implemented Change Requests (482s):

EVA-1722
EVA-1723
EVA-1724
EVA-1735
EVA-1736

NOTE
For STS-116 and subsequent flights

Incorporate the following:

1. Replace iii and iv
2. Replace 3-3 thru 3-8
3. Replace 4-5 and 4-6
4. Replace 10-9 and 10-10
5. Replace 11-1 thru 11-4
6. Replace 15-9 and 15-10, 15-13 and 15-14

Prepared by: Book Manager

Approved by: Lead, EVA Systems Group

Lead, EVA Task Group

Accepted by: Chief, EVA and Crew Systems Operations Branch

Encl: 20 pages

File this PCN immediately behind the front cover as a permanent record

EVA CHECKLIST	GENERIC, REV H (Mar 4, 2005)

PCN-5 (Aug 17, 2006) Sheet 1 of 1

List of Implemented Change Requests (482s):

EVA-1686
EVA-1688
EVA-1689
EVA-1690
EVA-1716

NOTE
For STS-115 and subsequent flights

Incorporate the following:

1. Replace iii and iv
2. Replace 1-3 thru 1-8
3. Replace 3-3 thru 3-8
4. Replace 4-5 thru 4-8
5. Replace 12-3 and 12-4
6. Replace 19-9 and 19-10

Prepared by: 8-7-06
Book Manager

Approved by: 8/7/06
Lead, EVA Systems Group

8/8/06
Lead, EVA Task Group

Accepted by: 8/8/06
Chief, EVA and Crew Systems
Operations Branch

Encl: 22 pages

File this PCN immediately behind the front cover as a permanent record

EVA CHECKLIST	GENERIC, REV H (Mar 4, 2005)

PCN-4 (June 12, 2006) Sheet 1 of 1

List of Implemented Change Requests (482s):

EVA-1654
EVA-1655
EVA-1656
EVA-1667
EVA-1680

NOTE
For STS-121 and subsequent flights

Incorporate the following:

1. Replace iii thru viii
2. Replace 1-3 thru 1-8
3. Replace section 3 (12 pages)
4. Replace 4-1 thru 4-10
   After 4-10, add 4-11 and 4-12
5. Replace 5-1 and 5-2
6. Replace A6-1 and CC A6-2, B6-1 and CC B6-2
7. Replace 12-1 thru 12-4, 12-19 thru 12-22
8. Replace 14-3 thru 14-10, 14-13 and 14-14, 14-17 thru 14-22
9. Replace section 15 (14 pages)
10. Replace 19-9 and 19-10
11. Replace 20-1 and 20-2

Prepared by: _____
Book Manager

Approved by: _____
Lead, EVA Systems Group

_____
Lead, EVA Task Group

Accepted by: _____
Chief, EVA and Crew Systems
Operations Branch

Encl: 84 pages

File this PCN immediately behind the front cover as a permanent record

PAGE CHANGE NOTICE

EVA CHECKLIST	GENERIC, REV H (Mar 4, 2005)

PCN-3 (Aug 1, 2005) Sheet 1 of 1

List of Implemented Change Requests (482s):

EVA-1633
EVA-1652

NOTE
For STS-121 and subsequent flights

Incorporate the following:

1. Replace iii thru viii
2. Replace 15-1 thru 15-4

Prepared by: Book Manager

Approved by: Acting Lead, EVA Systems Group

Lead, EVA Task Group

Accepted by: Chief, EVA and Crew Systems Operations Branch

Encl: 10 pages

File this PCN immediately behind the front cover as a permanent record

EVA CHECKLIST	GENERIC, REV H (Mar 4, 2005)

PCN-2 (June 10, 2005) Sheet 1 of 1

List of Implemented Change Requests (482s):

EVA-1608

NOTE
For STS-114 and subsequent flights

Incorporate the following:

1. Replace iii and iv
2. Replace 12-15 and 12-16

Prepared by: Pat S Sabo
Book Manager

Approved by: Tricia K Mack
Acting Lead, EVA Systems Group

Scott A Bleisath for Randy McDaniel
Lead, EVA Task Group

Accepted by: Angela Prince
Chief, EVA and Crew Systems Operations Branch

Encl: 4 pages

File this PCN immediately behind the front cover as a permanent record

EVA CHECKLIST	GENERIC, REV H (Mar 4, 2005)

PCN-1 (Apr 8, 2005) Sheet 1 of 1

List of Implemented Change Requests (482s):

EVA-1563	EVA-1574	MULTI-1694
EVA-1566	EVA-1575	
EVA-1570 (R)	EVA-1576	
EVA-1573		

(R) Remainder of a previous partial implementation is in this publication

Incorporate the following:

1. Replace iii and iv
2. Replace 1-3 thru 1-10
3. Replace 2-1 and 2-2
4. Replace 4-5 thru 4-8
5. Replace 9-3 and 9-4
6. Replace 12-9 thru 12-14
7. Replace 15-3 and 15-4
8. Replace 19-5 and 19-6

Prepared by: _____
Book Manager

Approved by: _____
Lead, EVA Systems Group

_____
Lead, EVA Task Group

Accepted by: _____
Chief, EVA and Crew Systems
Operations Branch

Encl: 28 pages

File this PCN immediately behind the front cover as a permanent record

MISSION OPERATIONS DIRECTORATE

EVA CHECKLIST

GENERIC, REV H
March 4, 2005

PREPARED BY:

Paul G. Boehm
Book Manager

APPROVED BY:

Randall S. McDaniel
Lead, EVA Task Group

Randall S. McDaniel
Acting Lead, EVA Systems Group

FOR

Angela R. Prince
Chief, EVA and Crew Systems Operations Branch

This document is under the configuration control of the Crew Procedures Control Board (CPCB). All proposed changes must be submitted on FDF Workflow Crew Procedure Change Request (CR) to DO3/FDF Manager.

Additional distribution of this book, for official use only, may be requested in writing to DO3/FDF Manager. The request must include justification and requester's name, organization, position, and phone number. Contractor requests are made through the NASA or DOD organization supported. Deletions, reduction in quantity, or change of address may be submitted to DO3/FDF Management Office, 281-244-1184.

Incorporates the following:				
482#:	EVA-1529	EVA-1555	EVA-1564	MULTI-1693
	EVA-1530	EVA-1556	EVA-1565	MULTI-1694
	EVA-1543	EVA-1557	EVA-1566	
	EVA-1544A	EVA-1558	EVA-1567	
	EVA-1546	EVA-1559	EVA-1568	
	EVA-1551	EVA-1560	EVA-1569	
	EVA-1552	EVA-1561	EVA-1570(P)	
	EVA-1553	EVA-1562		
	EVA-1554	EVA-1563		

(P) – Partially implemented in this publication

AREAS OF TECHNICAL RESPONSIBILITY

Book Manager	DX35/P. Boehm	281-483-5447
Task Procedures	DX32/K. Shook	281-483-4474

LIST OF EFFECTIVE PAGES

GENERIC	12/07/87	PCN-4	06/12/06	PCN-9	06/15/07
REV H	03/04/05	PCN-5	08/17/06	PCN-10	07/18/07
PCN-1	04/08/05	PCN-6	11/10/06	PCN-11	09/28/07
PCN-2	06/10/05	PCN-7	02/20/07		
PCN-3	08/01/05	PCN-8	05/22/07		

Sign Off	*	ALL/GEN H	4-11	ALL/GEN H,4
ii	*	ALL/GEN H	4-12	ALL/GEN H,4
iii	*	ALL/GEN H,11	5-1	ALL/GEN H
iv	*	ALL/GEN H,11	5-2	ALL/GEN H,4
v		ALL/GEN H,4	5-3	ALL/GEN H
vi		ALL/GEN H,11	5-4	ALL/GEN H
vii		ALL/GEN H,4	A6-1	NOM/GEN H
viii		ALL/GEN H,4	CC A6-2	NOM/GEN H,4
1-1		ALL/GEN H	B6-1	TNL/GEN H
1-2		ALL/GEN H	CC B6-2	TNL/GEN H,4
1-3		ALL/GEN H,9	6-3	ALL/GEN H
1-4		ALL/GEN H	CC 6-4	ALL/GEN H
1-5		ALL/GEN H	7-1	Δ ALL/GEN H
1-6		ALL/GEN H,9	7-2	Δ ALL/GEN H
1-7		ALL/GEN H	8-1	ALL/GEN H,9
1-8		ALL/GEN H,9	8-2	ALL/GEN H,9
1-9		ALL/GEN H,9	8-3	ALL/GEN H
1-10		ALL/GEN H	8-4	ALL/GEN H,7
2-1		ALL/GEN H,1	8-5	ALL/GEN H,7
2-2		ALL/GEN H,1	8-6	ALL/GEN H
2-3		ALL/GEN H	8-7	ALL/GEN H,9
2-4		ALL/GEN H	8-8	ALL/GEN H,9
2-5		ALL/GEN H	9-1	ALL/GEN H
2-6		ALL/GEN H	9-2	ALL/GEN H,7
3-1		ALL/GEN H,4	9-3	ALL/GEN H,7
3-2		ALL/GEN H,7	9-4	ALL/GEN H,8
3-3		ALL/GEN H,11	9-5	ALL/GEN H,8
3-4		ALL/GEN H,6	9-6	ALL/GEN H
3-5		ALL/GEN H,6	10-1	ALL/GEN H,11
3-6		ALL/GEN H,6	10-2	ALL/GEN H
3-7		ALL/GEN H,11	10-3	ALL/GEN H
3-8		ALL/GEN H,7	10-4	ALL/GEN H
3-9		ALL/GEN H,7	10-4a	ALL/GEN H,7
CC 3-10		ALL/GEN H,4	10-4b	ALL/GEN H,7
CC 3-11		ALL/GEN H,4	10-5	ALL/GEN H
3-12		ALL/GEN H,4	10-6	ALL/GEN H
4-1		ALL/GEN H,4	10-7	ALL/GEN H
4-2		ALL/GEN H,4	10-8	ALL/GEN H,9
4-3		ALL/GEN H,4	10-9	ALL/GEN H,8
4-4		ALL/GEN H	10-10	ALL/GEN H
4-5		ALL/GEN H,11	10-11	ALL/GEN H,7
4-6		ALL/GEN H,4	10-12	ALL/GEN H,11
4-7		ALL/GEN H,5	10-13	ALL/GEN H,11
4-8		ALL/GEN H,7	10-14	ALL/GEN H,11
4-9		ALL/GEN H,7	11-1	ALL/GEN H
4-10		ALL/GEN H,11	11-2	ALL/GEN H,6

* – Omit from flight book

Δ – Replace with page from Flight Supplement, if applicable. Otherwise, not flown

11-3 ..... ALL/GEN H,6
11-4 ..... ALL/GEN H
12-i ..... ALL/GEN H
12-ii ..... ALL/GEN H
12-1 ..... ALL/GEN H
12-2 ..... ALL/GEN H,4
12-3 ..... ALL/GEN H
12-4 ..... ALL/GEN H,5
12-5 ..... ALL/GEN H
12-6 ..... ALL/GEN H
12-7 ..... ALL/GEN H,11
12-8 ..... ALL/GEN H
12-9 ..... ALL/GEN H
12-10 ..... ALL/GEN H,1
12-11 ..... ALL/GEN H,1
12-12 ..... ALL/GEN H,1
12-13 ..... ALL/GEN H
12-14 ..... ALL/GEN H,1
12-15 ..... ALL/GEN H,2
12-16 ..... ALL/GEN H,2
12-17 ..... ALL/GEN H
12-18 ..... ALL/GEN H
12-19 ..... ALL/GEN H,11
12-20 ..... ALL/GEN H,4
12-21 ..... ALL/GEN H
12-22 ..... ALL/GEN H,11
12-23 ..... ALL/GEN H
12-24 ..... ALL/GEN H
12-25 ..... ALL/GEN H
12-26 ..... ALL/GEN H
13-1 ..... Δ ALL/GEN H
13-2 ..... Δ ALL/GEN H
14-1 ..... ALL/GEN H
14-2 ..... ALL/GEN H
14-3 ..... ALL/GEN H
14-4 ..... ALL/GEN H,4
14-5 ..... ALL/GEN H
14-6 ..... ALL/GEN H,4
14-7 ..... ALL/GEN H,4
14-8 ..... ALL/GEN H
14-9 ..... ALL/GEN H
14-10 ..... ALL/GEN H,4
14-11 ..... ALL/GEN H
14-12 ..... ALL/GEN H
14-13 ..... ALL/GEN H
14-14 ..... ALL/GEN H,4
14-15 ..... ALL/GEN H
14-16 ..... ALL/GEN H
14-17 ..... ALL/GEN H
14-18 ..... ALL/GEN H,4
14-19 ..... ALL/GEN H
14-20 ..... ALL/GEN H,4
14-21 ..... ALL/GEN H
14-22 ..... ALL/GEN H,4
15-1 ..... ALL/GEN H,4
15-2 ..... ALL/GEN H,4
15-3 ..... ALL/GEN H,4
15-4 ..... ALL/GEN H,4
15-5 ..... ALL/GEN H,4
15-6 ..... ALL/GEN H,4
15-7 ..... ALL/GEN H,4
15-8 ..... ALL/GEN H,4
15-9 ..... ALL/GEN H,6
15-10 ..... ALL/GEN H,4
15-11 ..... ALL/GEN H,4
15-12 ..... ALL/GEN H,4
15-13 ..... ALL/GEN H,6
15-14 ..... ALL/GEN H,4
16-i..... ALL/GEN H
16-ii..... ALL/GEN H
16-1 ..... ALL/GEN H
16-2 ..... ALL/GEN H
17-1 ..... Δ ALL/GEN H
17-2 ..... Δ ALL/GEN H
18-1 ..... Δ ALL/GEN H
18-2 ..... Δ ALL/GEN H
19-i..... ALL/GEN H
19-ii..... ALL/GEN H
19-1 ..... ALL/GEN H
19-2 ..... ALL/GEN H
19-3 ..... ALL/GEN H
19-4 ..... ALL/GEN H
19-5 ..... ALL/GEN H
19-6 ..... ALL/GEN H,1
19-7 ..... ALL/GEN H
19-8 ..... ALL/GEN H
19-9 ..... ALL/GEN H
19-10 ..... ALL/GEN H,5
19-11 ..... ALL/GEN H
19-12 ..... ALL/GEN H
20-1 ..... * ALL/GEN H
20-2 ..... * ALL/GEN H,4

EVA CUE CARDS

Title	Ref. Page	Card No.
SAFER CHECKOUT RESULTS (Front).....	CC 3-10	EVA-3a/O/C
SAFER STATUS TROUBLESHOOTING (Back)	CC 3-11	EVA-3b/O/D
DEPRESS/REPRESS		
(Nominal Configuration) (Front).....	CC A6-2	EVA-1a/NOM/O/J
(Tunnel Adapter Configuration) (Front)	CC B6-2	EVA-2a/TNL/O/V
FAILED LEAK CHECK		
(Back of DEPRESS/REPRESS).....	CC 6-4	EVA-1b/O/J EVA-2b/O/J

Δ – Replace with pages from Flight Supplement, if applicable. Otherwise, not flown

* – Omit from flight book

CONTENTS PAGE

10.2 PSI CABIN 1-1
MASK PREBREATHE INITIATE 1-2
PREP FOR 10.2 PSI CABIN 1-3
CABIN DEPRESS TO 10.2 PSI 1-4
10.2 PSIA DEPRESS CHART 1-5
10.2 PSI CABIN CONFIG 1-6
MASK PREBREATHE TERMINATE 1-6
10.2 PSI MAINTENANCE 1-7
CABIN REPRESS TO 14.7 PSI 1-8
14.7 PSI CABIN CONFIG 1-9

AIRLOCK CONFIG 2-1
AIRLOCK PREP 2-2
EMU SWAP 2-3
BOOSTER FAN DEACTIVATION/REMOVAL 2-4
BOOSTER FAN INSTALLATION/ACTIVATION 2-4
EMU REMOVAL 2-4
EMU INSTALLATION 2-4
EMU CHECKOUT PREP 2-5
LTA RESTRAINT STRAP REMOVAL 2-6
LTA RESTRAINT STRAP INSTALLATION 2-6

CHECKOUTS 3-1
EMU CHECKOUT 3-2
EMU POWERUP AND COMM CHECK ..... 3-2 I
PRIMARY REGULATOR/FAN/PUMP CHECK 3-4
SOP CHECK 3-5
BATTERY CHARGE CHECK INIT 3-6
BATTERY CHARGE CHECK TERM 3-6
EMU SWAP DURING CHECKOUT 3-7
POST EMU C/O RECONFIG 3-7
SAFER CHECKOUT 3-8
SELF TEST SEQUENCE 3-9
SAFER CHECKOUT RESULTS ..... CC 3-10
SAFER STATUS TROUBLESHOOTING ..... CC 3-11
REBA POWERED HARDWARE CHECKOUT 3-12

EVA PREP 4-1
MIDDECK PREP 4-2
EVA PREP 4-3
PREP FOR DONNING 4-3
EMU DONNING 4-5
EMU CHECK 4-7
EMU PURGE 4-7
EMU PREBREATHE 4-8
SAFER DONNING 4-8
EVA COMM CONFIG 4-10
EVA COMM DECONFIG 4-10
APPROVED NON-EMU HARDWARE MATRIX 4-11

EMU STATUS 5-1
EMU STATUS 5-2

DEPRESS/REPRESS 6-1
DEPRESS/REPRESS (NOM A/L) ..... CC A6-2
DEPRESS/REPRESS (TNL) ..... CC B6-2
FAILED LEAK CHECK 6-3
FAILED LEAK CHECK (5 PSI) ..... CC 6-4
FAILED LEAK CHECK (14.7/10.2 PSI) ..... CC 6-4

FLIGHT SPECIFIC TIMELINES 7-1

TOOLS AND STOWAGE 8-1
PORT LIGHTWEIGHT TOOL STOWAGE ASSEMBLY (TSA) 8-2
PGT CHECKOUT 8-3
PGSC-PGT CONNECTION (A31P AND 760XD) 8-4
PROGRAM PGT SETTINGS 8-5
DOWNLOAD/ERASE EVENT LOG 8-5
PGT CONTINGENCIES 8-6
PGT STANDARD SETTINGS 8-7

POST EVA 9-1
POST EVA 9-2
SUIT DOFFING 9-2
SAFER DOFFING 9-2
EMU WATER RECHARGE 9-3
SAFER STOW 9-3
SUIT DRYING/SEAL WIPE 9-4
OXYGEN RECHARGE VERIFICATION 9-4
WATER FILL VERIFICATION 9-4
EMU POWERDOWN/OVERNIGHT STOW 9-5

EMU MAINT/RECHARGE 10-1
WATER RECHARGE 10-2
EMU POWERUP 10-2
WATER FILL 10-2
WATER FILL VERIFICATION 10-2
EMU LiOH CHANGEOUT 10-4
MIDDECK EMU BATTERY RECHARGE (STAND-ALONE) 10-4a
MIDDECK EMU BATTERY RECHARGE/LiOH REPLACEMENT 10-5
INITIATE 10-5
TERMINATE 10-6
IN-SUIT EMU BATTERY RECHARGE/CHARGE VERIFICATION 10-7
INITIATE 10-7
TERMINATE 10-7
EMU POWERDOWN 10-7
HELMET LIGHT/PGT BATTERY RECHARGE 10-8
INITIATE 10-8
TERMINATE 10-9
REBA BATTERY INSTALLATION 10-9
EMU BATTERY REMOVAL/INSTALL 10-10
HELMET LIGHT BULB CHANGEOUT 10-11
REBA BATTERY RECHARGE 10-12
INITIATE 10-12
TERMINATE 10-13

POST EVA ENTRY PREP 11-1
POST EVA ENTRY PREP 11-2
SAFER ENTRY STOW 11-2
POST ISS EVA ENTRY PREP 11-3
SAFER ENTRY STOW 11-3

OFF-NOMINAL PROCEDURES 12-i
EMU CONTINGENCY PROCS 12-1
DISPLAY LOSS DURING POWER TRANSFER (WARM RESTART) 12-2
VACUUM H2O RECHARGE (MANNED) 12-2
LiOH REPLACEMENT (MANNED) 12-3
BATTERY REPLACEMENT (MANNED) 12-4
WATER DUMP 12-6
SCU SWAP (UNMANNED) 12-7
SCU SWAP (MANNED) 12-7
EMU COLD RESTART (MANNED) 12-7
12.1 STS EVA DECONTAMINATION 12-8
CONTAMINATION TEST 12-15
SAFER BATTERY CHANGEOUT 12-18
BENDS TREATMENT ADAPTER (BTA) INSTALLATION (IN-SUIT) 12-19
BTA PREP 12-19
BTA TREATMENT 12-19
BENDS TREATMENT ADAPTER (BTA) INSTALLATION (POST SUIT DOFFING) 12-21
BTA PREP 12-21
BTA TREATMENT 12-21
EMU RESIZE 12-24

TPS REPAIR 13-1

ORBITER CONTINGENCY EVA 14-1
PAYLOAD BAY EVA NOMENCLATURE 14-2
RMS/PRLA CONTINGENCY EVA 14-3
96 BOLT PRE-EVA TOOL CONFIG 14-13
96 BOLT EVA TIMELINE 14-14
CAPTURE LATCH MANUAL RELEASE (ODS/PMA) 14-19
96 BOLT EVA LAYOUT 14-21
PLBD LATCH TOOL PLACEMENT WITH DUAL LATCH GANG FAILURES 14-22

EVA CUFF CHECKLIST (CIL) 15-1
NORMAL EVA STATUS 15-2
DCM CONFIGURATION 15-2
EMU MALFUNCTION INDEX 15-2
DECOMPRESSION SICKNESS (DCS) 15-3
DECOMPRESSION SICKNESS (DCS) (CONT) 15-3
ABORT EVA 15-3
TERMINATE EVA 15-3
SUIT P EMERG 15-4
SOP O2 ON 15-4
BATT AMPS HIGH 15-4
BATT V DECAY OR BATT VDC LOW 15-4
SUIT P LOW 15-5
SUIT P HIGH 15-5
SOP P LOW 15-5
O2 USE HIGH 15-5
SUBLM PRESS 15-6
H2O GP LOW 15-6
RESRV H2O ON 15-6
H2O WP HIGH 15-6
NO VENT FLOW 15-7
CO2 HIGH OR MONITOR CO2 15-7
CO2 SNSR BAD 15-7

COMM FAILURE 15-7
AIR FLOW CONTAMINATION 15-8
LOSS OF COOLING 15-8
RLF V FAIL 15-8
MISC MSGS 1 15-8
MISC MSGS (CONT)/TIME LF 15-9
AIRLOCK LATCH DISCONNECT 15-9
AIRLOCK INGRESS 15-9

FOLLOWING PAGES NOT IN EV CUFF

RADIATOR ACTUATOR DISCONNECT 15-9
PLBD DRIVE CUT 15-10
DOOR DRIVE RESTRAINT 15-10
DOOR DRIVE DISCONNECT 15-10
WINCH OPERATIONS 15-10
WINCH OPERATIONS (CONT) 15-11
3-PT TOOL INSTALLATION 15-11
CL LATCH TOOL 15-11
RMS JOINT ALIGN 15-11
MPM STOW/DEPLOY 15-12
RMS TIEDOWN 15-12
RMS FLIGHT RELEASABLE GRAPPLE FIXTURE RELEASE 15-12
PRLA OPEN/CLOSE 15-12
PRLA OPEN/CLOSE (CONT) 15-13
KU ANTENNA STOW 15-13
KU ANTENNA STOW (CONT) 15-13
AIRLOCK EGRESS 15-13

FLIGHT SPECIFIC REFERENCE 16-i
UNSCHEDULED/CONTINGENCY EVA TASKS 16-1

EVA REFERENCE 17-1

FLIGHT SPECIFIC 18-1

EVA EMERGENCY 19-i
EMERGENCY PROCEDURES 19-1
EMERGENCY AIRLOCK REPRESS 19-3
EMERGENCY AIRLOCK REPRESS 19-4
POST EMERGENCY AIRLOCK REPRESS 19-4
SAFER RESCUE 19-5
SAFER RESCUE 19-6
DAP/EVA RESCUE/RETRIEVE 19-7
EVA ORBITER CONFIG 19-7
EVA RESCUE/RETRIEVE 19-9
19.1 DCS TREATMENT 19-10

CUE CARD CONFIGURATION 20-1

10.2 PSI CABIN

MASK PREBREATHE INITIATE..... 1-2
PREP FOR 10.2 PSI CABIN..... 1-3
CABIN DEPRESS TO 10.2 PSI..... 1-4
10.2 PSIA DEPRESS CHART..... 1-5
PSI CABIN CONFIG..... 1-6
MASK PREBREATHE TERMINATE..... 1-6
10.2 PSI MAINTENANCE..... 1-7
CABIN REPRESS TO 14.7 PSI..... 1-8
14.7 PSI CABIN CONFIG..... 1-9

MASK PREBREATHE INITIATE

1. Take one aspirin tablet (325 mg) if not taken previously
2. Configure quick don mask, HIU, and 14 ft comm/O2 umbilicals (two)

C7 L2
3. √LEH O2 SPLY 1,2 vlv (two) – OP
4. O2 XOVR SYS 2 – CL

C6, MO32M, MO69M
5. LEH O2 4(5,6,7) outlet – connect O2 hose

MO39M
6. MIDDECK COMM CCU PWR – OFF
   outlet – connect comm cable
   CCU PWR – ON
7. Decrease HIU volume control

C6, MO32M, MO69M
8. LEH O2 4(5,6,7) vlv – OP

> WARNING
> Positive mask O2 pressure and fit are necessary to ensure adequate prebreathe

9. Verify black plates in top of mask are seated in silicon
10. Don mask
11. Set mask O2 control to EMERGENCY
12. Momentarily pull mask away from face and verify O2 flow

    * If no positive O2 flow, contact MCC *

13. √Comm
14. Configure ATU for PTT/PTT as reqd to alleviate comm noise

> WARNING
> Do not terminate prebreathe until cabin pressure at 10.2 psia and 1 hr prebreathe completed

15. Note time and continue mask prebreathe at least 1 hr

PREP FOR 10.2 PSI CABIN

PRESS/CRYO SYS CONFIG

L2 1. √O2 SYS 1,2 SPLY (two) – ctr (tb-OP)
√XOVR SYS 1 – OP
2 – CL

2. √N2 SYS 1,2 SPLY (two) – ctr (tb-OP)
√REG INLET (two) – ctr (tb-OP)

3. O2/N2 CNTLR VLV SYS 1 – OP (N2)
2 – CL (O2)

SM 88 APU/ENVIRON THERM

4. If FLASH EVAP CNTLR PRI A,B – OFF:
If FREON LOOP 1,2 EVAP OUT T between
41-47 degF:
L1 RAD CNTLR OUT TEMP – HI
When FREON EVAP OUT TEMP > 50 degF,
RAD CNTLR OUT TEMP – NORM (then immediately)
FLASH EVAP CNTLR PRI A(B) – ON
After ~1 min
√FREON EVAP OUT TEMP ~39 degF
If FREON LOOP 1,2 EVAP OUT T not between
41-47 degF:
FLASH EVAP CNTLR PRI A(B) – ON

L1 If FLASH EVAP CNTLR PRI A(B) – ON, continue:

AIRLOCK/MIDDECK PREP

MO10W 5. O2 REG INLET SYS 1 vlv – CL
2 vlv – OP

6. √N2 XOVER vlv – CL

AW18A 7. LTG FLOOD (four) – ON

DCM 8. √PURGE vlv – op (up)

9. Remove LTA Restraint Bag (1 ea EMU)

AW82B 10. AIRLK DEPRESS vlv cap – vent, remove

RESET FDA & C/W LIMITS

X: SM 60 SM TABLE MAINT

11. Contact MCC for uplink of B/U C/W and SM ALERT TMBU (if desired)

Changes enclosed in [ ]

PARAMETER NAME	C/W CHL	H/W C/W		H/W & B/U ENA/INH	PARA ID	B/U C/W	
		LO V	HI V			LO EU	HI EU
CABIN PRESS (OV103)	4	2.50	3.85	ENA	0612405	10.0	15.2
(OV104)	4	2.50	3.85	ENA	0612405	10.0	15.2
(OV105)	4	2.45	3.80	ENA	0612405	10.0	15.2
O2 FLOW 1	14		4.90	INH	0612105		4.9
2	24		4.90	INH	0612205		4.9
PPO2 A	34	2.55	3.60	ENA	0612511	2.55	3.6
B	44	2.55	3.60	ENA	0612513	2.55	3.6
N2 FLOW 1	54		4.90	INH	0612553		4.9
2	64		4.90	INH	0612554		4.9
FAN ΔP	74	1.75	4.25	ENA	0612556	2.8	6.8

PARAMETER NAME	ENA/ INH	PARA ID	SM ALERT	
			LOW	HIGH
OV-103				
AV BAY 1 FAN ΔP	ENA	0612642	2.29	4.90
AV BAY 2 FAN ΔP	ENA	0612647	1.91	4.50
AV BAY 3 FAN ΔP	ENA	0612658	2.21	5.10
OV-104				
AV BAY 1 FAN ΔP	ENA	0612642	1.91	4.50
AV BAY 2 FAN ΔP	ENA	0612647	1.91	4.50
AV BAY 3 FAN ΔP	ENA	0612658	2.21	5.10
OV-105				
AV BAY 1 FAN ΔP	ENA	0612642	2.04	4.90
AV BAY 2 FAN ΔP	ENA	0612647	1.70	4.50
AV BAY 3 FAN ΔP	ENA	0612658	1.97	5.10
IMU FAN ΔP	ENA	0612869	2.7	4.95
CABIN O2 CONCENTRATION	ENA	0922104		28.5
AIRLK P	INH	0640101	13.8	15.7
EXT AIRLK P	INH	0640126	13.8	15.7

CABIN DEPRESS TO 10.2 PSI

> **WARNING**
> Do not initiate depress until EV1 and EV2 have completed 45 min of mask prebreathe
> Do not terminate prebreathe until cabin pressure at 10.2 psia and 1 hr mask prebreathe completed

EV

1. Momentarily pull mask away from face and verify O2 flow

   * If no positive O2 flow, contact MCC *

2. Plot initial CABIN P vs PPO2 on 10.2 PSIA DEPRESS CHART using SM SYS SUMM 1

> **WARNING**
> Cabin O2 concentration (SM SYS SUMM 1) must be maintained below 28.5% to protect against increased flammability risk
> Terminate all WCS activity while flowing N2 thru 14.7 CAB REG INLET SYS 1

NOTE
Expect klaxon each time airlock depress valve opened

AW82B, MO10W

3. START DEPRESS
   Config vlvs per DEPRESS CHART

4. Continue plotting CABIN P vs PPO2 every 60 sec using SM SYS SUMM 1. Reconfig vlvs when plot transitions into different zone

5. STOP DEPRESS
   When CABIN P and PPO2 are in CONTROL ZONE (TARGET ZONE preferred), stop depress by configuring as listed at lower left of 10.2 PSIA DEPRESS CHART

10.2 PSIA DEPRESS CHART

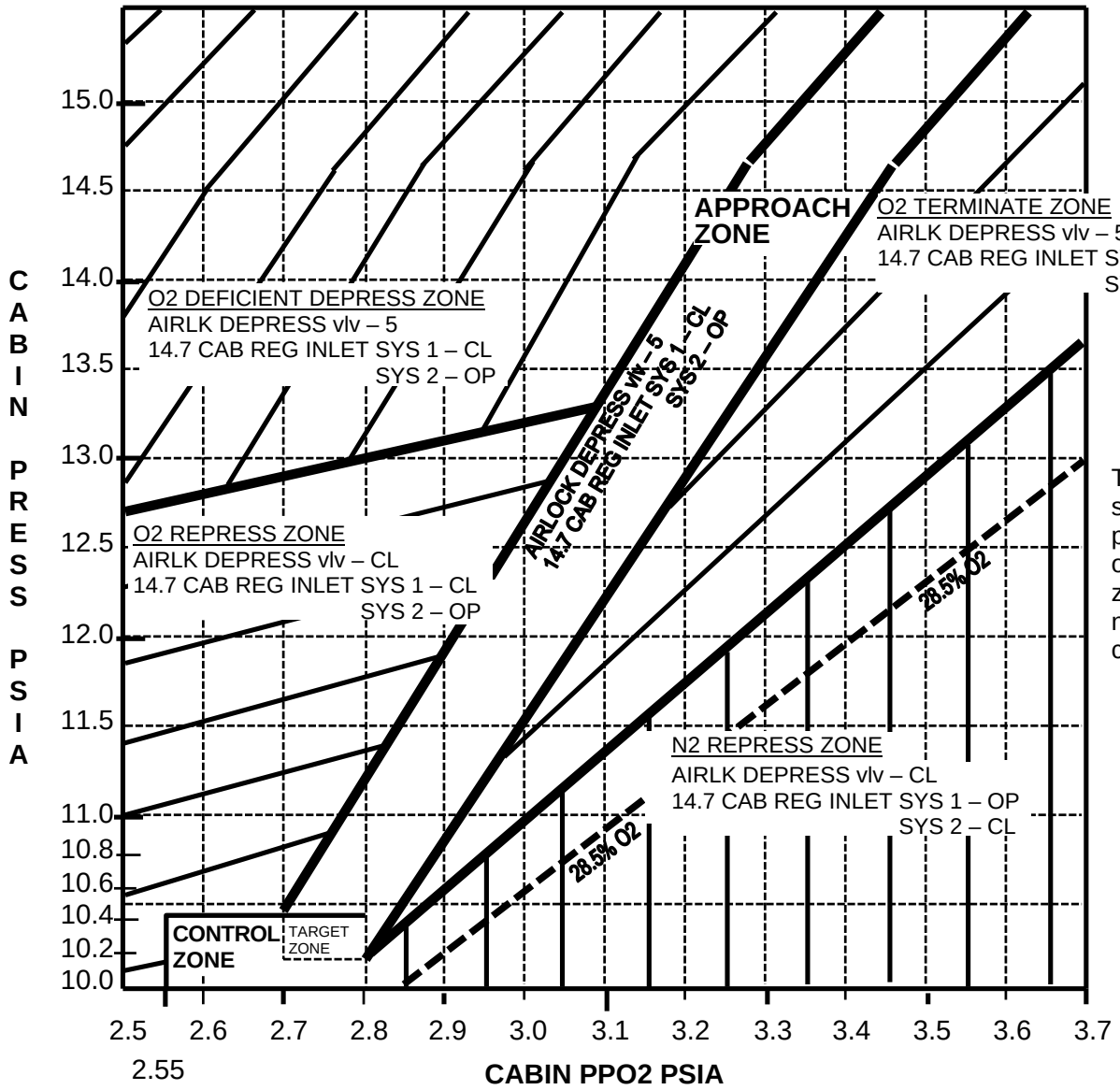

NOTE
Trend of plot should closely parallel slope of lines in each zone. If it does not, verify valve config

When in **CONTROL ZONE** (**TARGET ZONE** preferred):

STOP DEPRESS
AIRLK DEPRESS vlv – CL
Install AIRLK DEPRESS vlv Cap
14.7 CAB REG INLET SYS 1 – CL
SYS 2 – CL

10.2 PSI CABIN CONFIG

X: SM 60 SM TABLE MAINT

R13 1. Reset FDA & C/W limits
Changes enclosed in [ ]
2. Contact MCC for uplink of B/U C/W and SM ALERT TMBU (if desired)

PARAMETER NAME	C/W CHL	H/W C/W		H/W & B/U ENA/INH	PARA ID	B/U C/W	
		LO V	HI V			LO EU	HI EU
CABIN PRESS (OV103)	4	2.50	2.70	ENA	0612405	10.0	10.6
(OV104)	4	2.50	2.70	ENA	0612405	10.0	10.6
(OV105)	4	2.45	2.65	ENA	0612405	10.0	10.6
PPO2 A	34	2.55	2.90	ENA	0612511	2.55	2.9
B	44	2.55	2.90	ENA	0612513	2.55	2.9
FAN ΔP	74	1.75	3.05	ENA	0612556	2.8	4.88

PARAMETER NAME	ENA/ INH	PARA ID	SM ALERT	
			LOW	HIGH
OV-103				
AV BAY 1 FAN ΔP	ENA	0612642	2.29	3.82
AV BAY 2 FAN ΔP	ENA	0612647	1.91	3.51
AV BAY 3 FAN ΔP	ENA	0612658	2.21	3.98
OV-104				
AV BAY 1 FAN ΔP	ENA	0612642	1.91	3.51
AV BAY 2 FAN ΔP	ENA	0612647	1.91	3.51
AV BAY 3 FAN ΔP	ENA	0612658	2.21	3.98
OV-105				
AV BAY 1 FAN ΔP	ENA	0612642	2.04	3.33
AV BAY 2 FAN ΔP	ENA	0612647	1.70	3.06
AV BAY 3 FAN ΔP	ENA	0612658	1.97	3.47
IMU FAN ΔP	ENA	0612869	2.7	3.8

3. Perform SM CHECKPOINT INITIATE (ORB OPS, DPS)

L2 4. O2 XOVR SYS 2 – OP

5. If O2 bleed orifice not installed:

MO69M √LEH O2 vlv 8 – CL
Unstow and insert O2 bleed orifice in O2 QD
LEH O2 vlv 8 – OP

MASK PREBREATHE TERMINATE

> **WARNING**
> Do not terminate prebreathe until cabin pressure at 10.2 psia and 1 hr prebreathe completed

When mask prebreathe complete:

EV 1. Momentarily pull mask away from face to verify O2 flow

* If no positive O2 flow, contact MCC *

2. Set mask O2 control to NORMAL
3. Doff mask

C6, MO32M, MO69M 4. LEH O2 4(5,6,7) vlv – CL

MO39M 5. MIDDECK COMM CCU PWR – OFF
outlet – Disconnect comm cable
CCU PWR – ON

6. Depress Mask O2 control

C6, MO32M, MO69M 7. LEH O2 4(5,6,7) outlet – Disconnect hose

8. Stow mask, HIU, and 14 ft comm/O2 umbilical

I

10.2 PSI MAINTENANCE

WARNING

Cabin O2 concentration (SM SYS SUMM 1) must be maintained below 28.5%. See chart this page

Terminate all WCS activity while flowing N2 thru 14.7 CAB REG INLET SYS 1

CAUTION

Do not perform 10.2 PSI MAINTENANCE in parallel with EMU purge

X: SM SYS SUMM 1

NOTE

Perform 10.2 PSI MAINTENANCE procedure post airlock repress and post sleep while 10.2 psi operations desired. Perform pre-sleep maintenance, if reqd, using target area in control zone

1. If PPO2 < 2.70 psia:
   If pre-sleep:
OCAC Perform OCAC filter cleaning as reqd
      OCAC PWR – OFF
C5 DIRECT O2 – OP
2. When PPO2 ~2.70 psia or when CABIN PRESS ~10.4 psia:
   DIRECT O2 – CL
   If pre-sleep:
OCAC OCAC PWR – ON
3. If CABIN PRESS < 10.40 psia:
MO10W 14.7 CAB REG INLET SYS 1 vlv – OP (N2)
   When CABIN PRESS ~10.40 psia:
      14.7 CAB REG INLET SYS 1 vlv – CL

CABIN LEAK MONITORING

4. Log 10.2 PSI MAINTENANCE times (MET)

1._____	5. _____
2._____	6. _____
3._____	7. _____
4._____	8. _____

NOTE

If MCC requests maintenance, then log time and use that time to compare to next maintenance

5. If successive maintenance reqd because CABIN PRESS decreased from 10.40 to 10.00 psia:
   For Δt < 40 min, go to O2(N2) FLOW HIGH/CAB P LOW/dP/dT (ORB PKT, ECLS)
   For 40 min < Δt < 10 hr, go to MAL, ECLS SSR-8, SMALL CABIN-LEAK ISOL

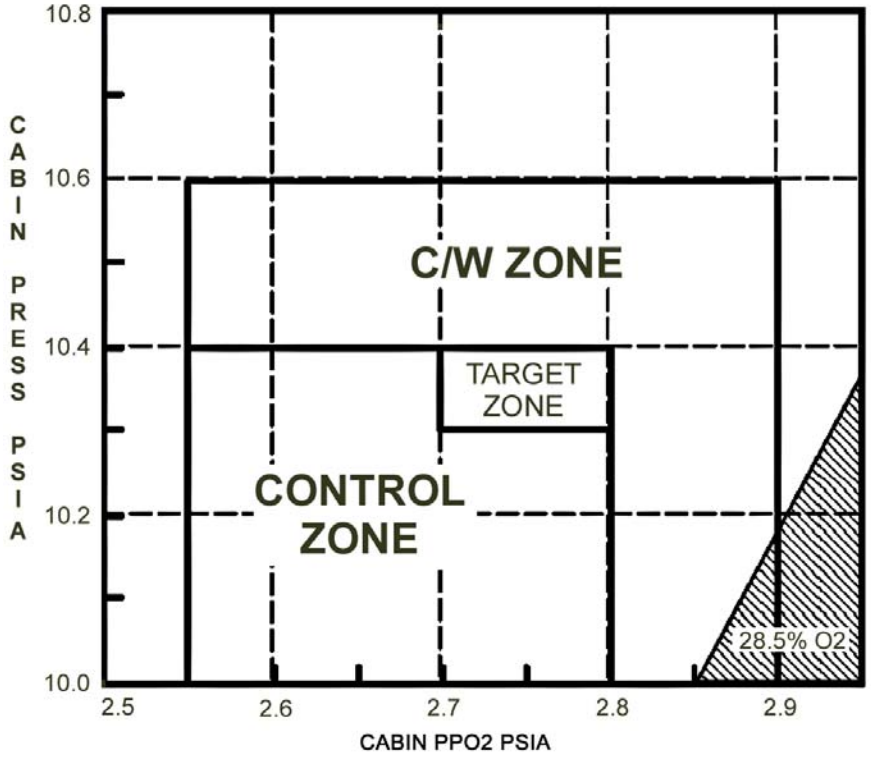

CABIN REPRESS TO 14.7 PSI

WARNING
Terminate all WCS activity during repress to 14.7 psia

SETUP

X: SM 60 SM TABLE MAINT

R13
1. Reset C/W and FDA limits
2. Contact MCC for uplink of B/U C/W and SM ALERT TMBU (if desired)

Changes enclosed in [ ]

PARAMETER NAME	C/W CHL	H/W C/W		H/W & B/U ENA/INH	PARA ID	B/U C/W	
		LO V	HI V			LO EU	HI EU
CABIN PRESS (OV103)	4	2.50	3.85	ENA	0612405	10.0	15.2
(OV104)	4	2.50	3.85	ENA	0612405	10.0	15.2
(OV105)	4	2.45	3.80	ENA	0612405	10.0	15.2
PPO2 A	34	2.55	3.60	ENA	0612511	2.55	3.6
B	44	2.55	3.60	ENA	0612513	2.55	3.6
FAN ΔP	74	1.75	4.25	ENA	0612556	2.8	6.8

PARAMETER NAME	ENA/INH	PARA ID	SM ALERT	
			LOW	HIGH
OV-103				
AV BAY 1 FAN ΔP	ENA	0612642	2.29	4.90
AV BAY 2 FAN ΔP	ENA	0612647	1.91	4.50
AV BAY 3 FAN ΔP	ENA	0612658	2.21	5.10
OV-104				
AV BAY 1 FAN ΔP	ENA	0612642	1.91	4.50
AV BAY 2 FAN ΔP	ENA	0612647	1.91	4.50
AV BAY 3 FAN ΔP	ENA	0612658	2.21	5.10
OV-105				
AV BAY 1 FAN ΔP	ENA	0612642	2.04	4.90
AV BAY 2 FAN ΔP	ENA	0612647	1.70	4.50
AV BAY 3 FAN ΔP	ENA	0612658	1.97	5.10
IMU FAN ΔP	ENA	0612869	2.7	4.95
H2O LOOP ICH OUT T1	ENA	0612744	33.0	
T2	ENA	0612724	33.0	

REPRESS

X: SM 66 ENVIRONMENT

MO10W
3. 14.7 CAB REG INLET SYS 1,2 vlv (two) – OP

L2
4. √O2/N2 CNTLR VLV SYS 1 – OP
   2 – AUTO
5. Contact MCC to determine if FES should remain ON
6. If FES operation not reqd:

L1
   FLASH EVAP CNTLR PRI A(B) – OFF

14.7 PSI CABIN CONFIG

ORBITER PCS 1(2) CONFIG

MO10W 1. O2 REG INLET SYS 1(2) vlv – OP
2(1) vlv – CL
2. H2O TK N2 REG INLET SYS 1(2) vlv – OP
2(1) vlv – CL
3. √H2O TK N2 ISOL SYS 1,2 vlv (two) – OP
4. If prior to shuttle airlock repress:
14.7 CAB REG INLET SYS 1,2 vlv (two) – CL
If after shuttle airlock repress:
14.7 CAB REG INLET SYS 1(2) vlv – OP
2(1) vlv – CL

L2 5. O2/N2 CNTLR VLV SYS 1(2) – AUTO
2(1) – CL(O2)

RESET C/W AND FDA LIMITS

R13U 6. Contact MCC for uplink of B/U C/W and SM ALERT TMBU (if desired)
Changes enclosed in [ ]

PARAMETER NAME	C/W CHL	H/W C/W		H/W & B/U ENA/INH	PARA ID	B/U C/W	
		LO V	HI V			LO EU	HI EU
CABIN PRESS (OV103)	4	3.45	3.85	ENA	0612405	13.8	15.2
(OV104)	4	3.45	3.85	ENA	0612405	13.8	15.2
(OV105)	4	3.40	3.80	ENA	0612405	13.8	15.2
O2 FLOW 1	14		4.90	ENA	0612105		4.9
2	24		4.90	ENA	0612205		4.9
PPO2 A	34	2.7	3.60	ENA	0612511	2.7	3.6
B	44	2.7	3.60	ENA	0612513	2.7	3.6
N2 FLOW 1	54		4.90	ENA	0612553		4.9
2	64		4.90	ENA	0612554		4.9
FAN ΔP	74	2.60	4.25	ENA	0612556	4.2	6.8

PARAMETER NAME	ENA/INH	PARA ID	SM ALERT	
			LOW	HIGH
OV-103				
AV BAY 1 FAN ΔP	ENA	0612642	3.00	4.90
AV BAY 2 FAN ΔP	ENA	0612647	2.50	4.50
AV BAY 3 FAN ΔP	ENA	0612658	2.90	5.10
OV-104				
AV BAY 1 FAN ΔP	ENA	0612642	2.50	4.50
AV BAY 2 FAN ΔP	ENA	0612647	2.50	4.50
AV BAY 3 FAN ΔP	ENA	0612658	2.90	5.10
OV-105				
AV BAY 1 FAN ΔP	ENA	0612642	3.00	4.90
AV BAY 2 FAN ΔP	ENA	0612647	2.50	4.50
AV BAY 3 FAN ΔP	ENA	0612658	2.90	5.10
IMU FAN ΔP	ENA	0612869	3.7	4.95
CABIN O2 CONCENTRATION	ENA	0922104		25.9
AIRLK P	ENA	0640101	13.8	15.7
EXT AIRLK P	ENA	0640126	13.8	15.7
H2O LOOP ICH OUT T1	ENA	0612744	35.0	
T2	ENA	0612724	35.0	

7. Go to SM CHECKPOINT INITIATE (ORB OPS, DPS)

This Page Intentionally Blank

AIRLOCK CONFIG

AIRLOCK PREP 2-2
EMU SWAP 2-3
BOOSTER FAN DEACTIVATION/REMOVAL 2-4
INSTALLATION/ACTIVATION 2-4
EMU REMOVAL 2-4
INSTALLATION 2-4
CHECKOUT PREP 2-5
LTA RESTRAINT STRAP REMOVAL 2-6
INSTALLATION 2-6

AIRLOCK PREP (50 min)

	Retrieve or unstow following equipment:
MF28G	3/8-in breaker bar, 4-in ext w/3/8-in drive
IFM Tool Kit	1/2-in socket w/3/8-in drive
Vol H	EMU Equipment Bag – attach to middeck wall
	Helmet Lights
	EVA Bag
	Contamination Detection Kit (location flight specific)
FDF Locker	Cuff Checklists (2) – stow in EMU Equipment Bag
	DEPRESS/REPRESS Cue Card

AIRLOCK CONFIG

1. √Inner hatch Equal vlv (two) – OFF

AW18A

2. LTG FLOOD (four) – ON
3. Remove from airlock, as reqd:
   - Airlock Stowage Bag
   - Airlock Floor Pallet using 3/8-in breaker bar, 4-in ext w/3/8-in drive, and 1/2-in socket w/3/8-in drive
4. Stow Vol H Bags in Vol H
5. Transfer to airlock:
   - EVA Bag – install on airlock wall
   - DEPRESS/REPRESS Cue Card
   - Helmet Lights
   - Contamination Detection Kit – install on airlock wall
6. Install IVA foot restraint, as reqd
7. Unbuckle SCU straps, Velcro SCU to wall
8. Install EMU lights on helmets (EMU 1,EMU 2)
9. Disconnect helmets from Airlock EMUs, temp stow
10. Remove comm caps from LTA Restraint Bags and connect to electrical harnesses
11. Install helmets (not reqd if proceeding directly to EMU Checkout)
12. Remove LTA Restraint Bags
13. Disconnect waist rings; remove and stow any equipment stowed in HUT/LTA
14. Stow LTA Restraint Bags on AAPs
15. √Thermal cover clear of waist ring
16. Waist ring – engage posn
17. Connect LTA to HUT, lock
18. Remove 20-g Crash Bag from middeck EMU, as reqd

EMU SWAP (30 min)

NOTE

EMU X is to be removed and EMU Y is to be installed

EMU X	1.	Install gloves
AW18H	2.	√PWR/BATT CHGR EMU 1,2 BUS SEL (two) – OFF √MODE (two) – OFF
DCM	3.	Disconnect SCU, install DCM cover
	4.	Stow SCU on AAP, Velcro to wall
	5.	Connect LTA to HUT, lock (if reqd)
	6.	Disconnect helmet with sunshades down and helmet cover installed; stow
	7.	Release EMU from AAP, transfer EMU to middeck
	8.	Install helmet
	9.	Remove 20-g Crash Bag on middeck EMUs (if flown)
EMU Y	10.	Disconnect helmet, temp stow
	11.	Remove comm cap from LTA Restraint Bag and connect to electrical harness (if reqd)
	12.	Remove LTA Restraint Bag
	13.	Release EMU from middeck AAP, transfer to airlock
	14.	Mount EMU on AAP
	15.	Install helmets (not reqd if proceeding directly to EMU Checkout)
	16.	Disconnect waist ring; remove and stow any equipment stowed in HUT/LTA
	17.	Waist ring – engage posn
	18.	Connect LTA to HUT, lock

NOTE

O2 vlv for SCU connected to EMU Y must be closed prior to checkout of EMU Y

AW82B	19.	If performing EMU CHECKOUT of EMU Y: EV-1(EV-2) O2 vlv – CL
EMU X	20.	Attach EMU to middeck AAP
	21.	Attach LTA Restraint Bag

BOOSTER FAN DEACTIVATION/REMOVAL (15 min)

MO13Q 1. ARLK FAN A,B (two) – OFF
MA73C:G 2. cb AC1,2 ARLK TNL FAN A,B (six) – op
EXT A/L 3. Disconnect flex duct from booster fan muffler inlet, direct airflow into airlock, temp secure
4. Disconnect vent duct from booster fan outlet and external airlock duct inlet; temp stow in middeck

If booster fan to be removed:

5. Disconnect flex duct from booster fan inlet; rotate and stow in launch bracket
6. Demate booster fan electrical connectors from J1,J2 (two) on tunnel extension wall; loosen cable harnesses (two) from Velcro strips (four)
7. Stow electrical connectors (two) on booster fan dummy fittings, secure cable harnesses with Velcro strips
8. Loosen booster fan fasteners (four)
9. Remove booster fan assy, temp stow in middeck

BOOSTER FAN INSTALLATION/ACTIVATION (15 min)

If booster fan to be installed:

MA73C:G 1. √cb AC1,2 ARLK TNL FAN A,B (six) – op
MO13Q 2. √ARLK FAN A,B (two) – OFF
EXT A/L 3. Install booster fan assy, secure fasteners (four)
4. Demate electrical connectors (two) from booster fan dummy fittings and Velcro strips
5. Mate booster fan electrical connectors J1,J2 (two) on tunnel extension wall; secure cable harnesses (two) with Velcro strips (four)
6. Unstow/connect flex duct from launch bracket to booster fan inlet
7. Unstow/connect vent duct to external airlock duct inlet and booster fan outlet
8. Unstow/connect flex duct from middeck to fan muffler inlet
MA73C:G 9. cb AC1,2 ARLK TNL FAN A,B (six) – cl
MO13Q 10. ARLK FAN A(B) – ON
11. Check for airflow at top of external airlock halo

EMU REMOVAL (15 min)

1. As reqd, install gloves
2. As reqd, perform LTA RESTRAINT STRAP INSTALLATION (AIRLOCK CONFIG)
3. As reqd, relocate LTA spring hooks (four) from AAP rings to SAFER mount brackets
4. Disconnect EMUs from AAPs, stow in middeck

EMU INSTALLATION (15 min)

1. Transfer EMUs to A/L, connect to AAPs
2. As reqd for EVA, perform LTA RESTRAINT STRAP REMOVAL (AIRLOCK CONFIG)
3. As reqd, relocate LTA spring hooks (four) from SAFER mount brackets to AAP rings

EMU CHECKOUT PREP (30 min)

AW18A
1. LTG FLOOD (four) – ON
2. Remove Airlock Stowage Bag from airlock (if flown)

Vol H
3. Unstow:
   EMU Equipment Bag – attach to middeck wall
   EMU Servicing Kit – mark with Gray Tape; label “Shuttle”; temp stow
   Drink Bags for later use (stow on top of Vol H Bags)
4. Stow Vol H Bags in Vol H
5. Unbuckle SCU straps, Velcro SCU to wall
6. Remove 20-g Crash Bag from middeck EMU (if flown)
7. Disconnect helmets from airlock EMUs, temp stow
8. Remove comm caps from LTA Restraint Bags and connect to electrical harnesses in EMU
9. Remove LTA Restraint Bags
10. Disconnect waist rings; remove and temp stow any equipment stowed in HUT/LTA
11. Stow LTA Restraint Bags on AAP
12. √Thermal cover clear of waist rings
13. Waist ring – engage position
14. Connect LTA to HUT, lock
15. Install helmet with sunshades down and helmet cover installed; lock (not reqd if proceeding directly to EMU Checkout)

LTA RESTRAINT STRAP REMOVAL (15 min)

NOTE

May be performed on EMU 1 and 2 simultaneously.
Perform steps as reqd for current EMU config

1. As reqd, remove comm cap from LTA Restraint Bag; temp stow
2. Remove EMU from AAP
3. Disconnect all restraint attachments from SAFER mount brackets (two)
4. Loosen cinch strap mechanism, remove SAFER mount brackets
5. Remove strap from PLSS
6. Stow strap in LTA Restraint Bag Pouch with D-rings (three) connected
7. Engage EMU in AAP
8. Stow LTA Restraint Bag/strap

LTA RESTRAINT STRAP INSTALLATION (15 min)

NOTE

May be performed on EMU 1 and 2 simultaneously. Perform steps as reqd for current EMU config. Procedure written to install in Launch/Landing config shown below

1. Unstow LTA Restraint Bag/strap
2. Remove EMU from AAP
3. Install SAFER mount brackets (two)
4. Install elastic band of strap around SOP
5. Tighten cinch strap mechanism
6. Attach strap French hooks (two) to SAFER mount brackets
7. Engage EMU in AAP
8. Stow LTA, suit arms inside LTA Restraint Bag
9. Connect upper spring hooks (two) over suit shoulders to upper AAP attachment rings (two)
10. Connect lower spring hooks (two) around suit arms to SAFER mount brackets (two)
11. Tighten all LTA bag straps with bag as high as possible on EMU

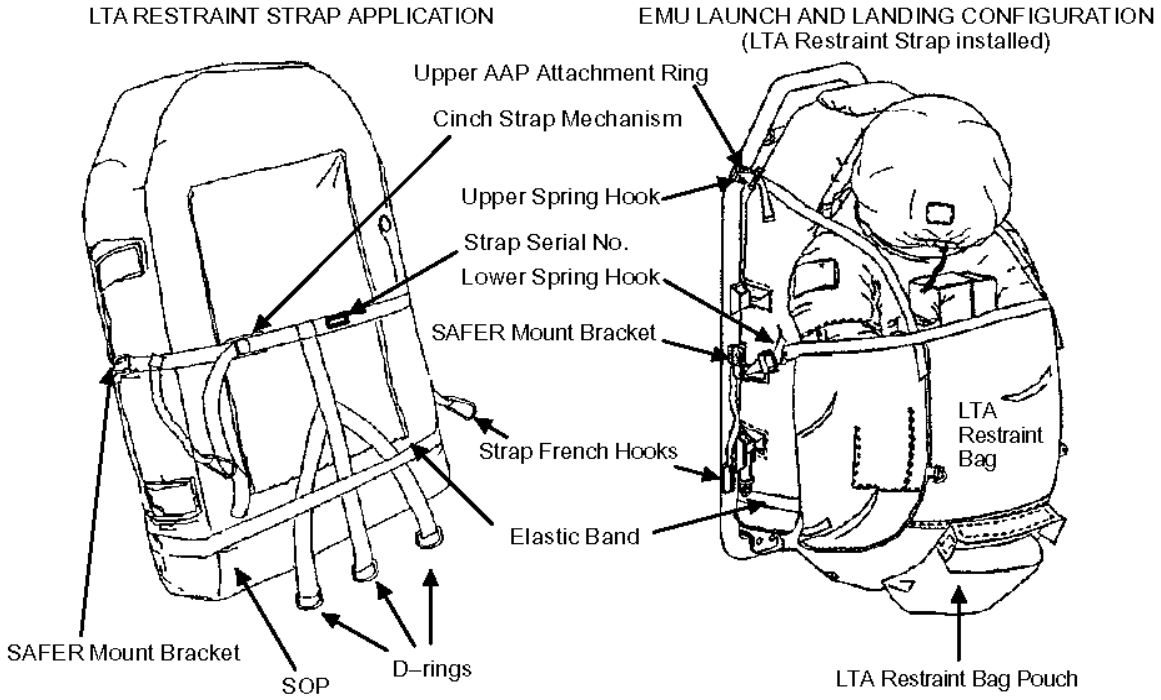

NOTE

French hooks should be attached to SAFER mount brackets for launch and landing

CHECKOUTS

EMU CHECKOUT 3-2
EMU POWERUP AND COMM CHECK 3-2
PRIMARY REGULATOR/FAN/PUMP CHECK 3-4
SOP CHECK 3-5
BATTERY CHARGE CHECK INIT 3-6
BATTERY CHARGE CHECK TERM 3-6
EMU SWAP DURING CHECKOUT 3-7
POST EMU C/O RECONFIG 3-7
SAFER CHECKOUT 3-8
SELF TEST SEQUENCE 3-9
SAFER CHECKOUT RESULTS ..... CC 3-10
SAFER STATUS TROUBLESHOOTING ..... CC 3-11
REBA POWERED HARDWARE CHECKOUT 3-12

EMU CHECKOUT

NOTE
Procedures are written for simultaneous C/O of EMUs #_____ (stbd) and #_____ (port) in airlock. An additional C/O of EMU(s) #_____ uses same procedure after performing EMU SWAP during C/O

X: SM 60 SM TABLE MAINT

☐ 1. Contact MCC for uplink of SM ALERT TMBU (if desired)
Changes enclosed in [ ]

Param Name	Param ID	Lower Limit	Upper Limit
EXT A/L H2O LINE T			
EXT A/L H2O SPLY ZN 1 T	0640181	43	100
EXT A/L LCG 2 SPLY ZN 1 T	0640182	36	85
EXT A/L H2O LINE T 2			
EXT A/L H2O SPLY ZN 2 T	0640184	48	100
EXT A/L LCG 2 SPLY ZN 2 T	0640185	36	82
EXT A/L O2 LN T			
EXT A/L O2 SPLY ZN 2 T	0640186	OSL	80
EXT A/L BATT CHARGER			
VOLTS EMU 1	0640210	OSL	OSH
VOLTS EMU 2	0640213	OSL	OSH

EMU POWERUP AND COMM CHECK (15 min)

NOTE
If procedure is being repeated for 3rd EMU #_____ only, other previously checked EMU #_____ is reqd in airlock to perform EMU POWERUP and COMM CHECK procedures to verify EMU-to-EMU comm.

PWR RESTART msg and BITE light should be illuminated whenever EMU power is cycled. Display and tone tests only occur during cold restarts

BOTH DCM ☐☐ 2. Retrieve, position SCUs; remove DCM covers
☐☐ 3. Connect SCUs to DCM, √locked
☐☐ 4. PWR – BATT

CAUTION
EMU must be on BATT pwr when airlock power supply is turned on

AW18H ☐☐ 5. PWR/BATT CHGR EMU 1,2 MODE (two) – PWR
BUS SEL (two) – MNA(MNB)
☐☐ 6. √EMU INPUT 1,2 volts = 18.0-20.0
EV AW18D ☐☐ 7. √AIRLK AUD PWR – OFF
BOTH DCM ☐☐ 8. COMM mode – ALT
☐☐ 9. √Comm FREQ – LOW
IV A1R ☐☐ 10. √AUD CTR UHF A/G 1,2 (two) – OFF
A/A – T/R
R14:C ☐☐ 11. √cb MNA UHF EVA – cl
√MNC UHF EVA – cl

R10 ☐☐ 12. BIOMED CH 1 – EVA 1
CH 2 – EVA 2

IVA ATU ☐☐ 13. √AUD PWR – AUD/TONE
A/G 1,2 (two) – OFF
A/A – T/R
ICOM A,B (two) – OFF (as reqd)

O6 ☐☐ 14. UHF SPLX/EVA PWR AMP – OFF
MODE – EVA

BOTH ☐☐ 15. √Helmets disconnected

☐☐ 16. Don comm caps

NOTE

After the next step, be prepared to verify no missing segments on display and that all tones are audible

☐☐ 17. PWR – SCU

☐☐ 18. Verify no missing segments during display test
Verify BITE light extinguishes
Verify status (continuous) tone and warble tone are audible

Report any anomalies to MCC

☐☐ 19. Perform onboard A/A comm check per table

EMUs		IV O6:	
MODE	FREQ	EVA STRING	UHF SPLX/EVA XMIT FREQ
ALT	LOW	2	259.7/414.2
ALT	HIGH	2	296.8/417.1
PRI	HIGH	1	296.8/417.1
PRI	LOW	1	259.7/414.2

IV IVA ATU ☐☐ 20. AUD A/G 1(2) – T/R

A1R ☐☐ 21. AUD CTR UHF A/G 1(2) – T/R
√A/G 2(1) – OFF
A/A – OFF

BOTH ☐☐ 22. Verify RF comm with MCC

IV A1R ☐☐ 23. AUD CTR UHF A/G 1(2) – OFF

☐☐ 24. Doff comm caps

If procedure is being repeated for 3rd EMU #_____ only, then on other previously checked EMU #_____:

☐ 25. Install helmet, lock

DCM ☐ 26. COMM mode – OFF

AW18H ☐ 27. PWR/BATT CHGR EMU 1(2) BUS SEL – OFF
MODE – OFF

DCM ☐☐ 28. DISP – STATUS, until DATA?COMBO displayed
– YES (hold for 2 sec)
– STATUS, until DATA EMU? displayed
– YES (hold for 2 sec)
Verify DATA?EMU displayed

PRIMARY REGULATOR/FAN/PUMP CHECK (40 min)

MD(flr) ☐☐ 29. EMU O2 ISOL VLV – OP

DCM ☐☐ 30. √STATUS: O2 P = 850-950

EMU	1	2	3	4
30. O2 P				

AW82B ☐☐ 31. EV-1,EV-2 O2 vlv (two) – OP

☐☐ 32. Install helmet, lock

☐☐ 33. √Suit arms aligned

☐☐ 34. √Gloves locked

☐☐ 35. √Helmet purge vlv – cl, locked

DCM ☐☐ 36. PURGE vlv – cl (dn)

☐☐ 37. O2 ACT – IV

☐☐ 38. √STATUS: SUIT P = 0.4-1.4 and stable (compare w/gauge)

EMU	1	2	3	4
38. SUIT P (IV)				

☐☐ 39. O2 ACT – PRESS

☐☐ 40. √STATUS: SUIT P = 4.2-4.4 and stable (compare w/gauge)
H2O TEMP = ambient
H2O GP = 14.0-16.0
H2O WP = 14.0-16.0

EMU	1	2	3	4
40. SUIT P (PRESS)				
H2O TEMP				
H2O GP				
H2O WP				

☐☐ 41. DISP – STATUS, until LEAK CHECK? displayed
DISP – YES (hold for 2 sec)
Follow displayed instructions

EMU	1	2	3	4
41. ΔP				

* If LEAKAGE HI/ SUIT P msg occurs (ΔP > 0.3 psi), *
* go to FAILED LEAK CHECK (14.7/10.2 PSI) Cue *
* Card, CC 6-4 *

☐☐ 42. O2 ACT – OFF

DCM ☐☐ 43. PURGE vlv – op (up)

☐☐ 44. √STATUS: SUIT P < 0.4 (compare w/gauge)

☐☐ 45. Disconnect glove

☐☐ 46. Reconnect glove

☐☐ 47. Disconnect helmet, temp stow

☐☐ 48. Disconnect waist ring – secure LTA to outer hatch handrail

☐☐ 49. Remove Multiple Water Connector cover, temp stow

☐☐ 50. Connect LCVG, √locked

DCM ☐☐ 51. √Temp control vlv – Max C

CAUTION
Minimize fan operation with O2 ACT – OFF (~2 min)

☐☐ 52. FAN – ON (PWR RESTART may occur)
Verify flow at neck ring vent port

AW18H ☐☐ 53. √EMU INPUT amps = 1.5-4.7 (1.5-5.0 at 14.7)

EMU	1	2	3	4
53. INPUT AMPS				

☐☐ 54. Install SCOF, lock

DCM ☐☐ 55. O2 ACT – IV, NO VENT FLOW msg, DISP – PRO
√Cooling flow in LCVG

☐☐ 56. √STATUS: H2O TEMP decrease from step 40

EMU	1	2	3	4
56. H2O TEMP				

* If no temp decrease, depress and hold pump priming *
* valve on back of EMU, while slowly cycling TCV *
* between 7 and Max C (30 sec minimum) *

AW18H ☐☐ 57. √EMU INPUT amps = 1.5-3.6 (1.5-4.0 at 14.7)
√EMU INPUT amps decrease from step 53

EMU	1	2	3	4
57. INPUT AMPS				

DCM ☐☐ 58. PWR – BATT, NO VENT FLOW message, DISP – PRO

☐☐ 59. √STATUS: BAT VDC ≥ 16.5
BAT AMPS = 2.3-3.7 (2.4-4.0 at 14.7)
RPM = 18.0-20.0 K

EMU	1	2	3	4
59. BAT VDC				
BAT AMPS				
RPM				

☐☐ 60. √Fan noise steady

☐☐ 61. O2 ACT – OFF

☐☐ 62. FAN – OFF

☐☐ 63. PWR – SCU

SOP CHECK (5 min)

☐☐ 64. Perform step 28 to reset data to EMU mode

DCM ☐☐ 65. √STATUS: SOP P = 5410-6800

EMU	1	2	3	4
65. SOP P				

SOP ☐☐ 66. √SOP gauge 5400-6800, note SOP interstage gauge

EMU	1	2	3	4
66. SOP GAUGE				
INT GAUGE				

DCM ☐☐ 67. DISP – STATUS until SUIT P displayed
– YES (hold for 2 sec) to lock parameter

☐☐ 68. Depress SOP manual override (50 sec max):
√SOP interstage gauge < 600
DCM √STATUS: SUIT P = 3.4-3.9

EMU	1	2	3	4
68. SUIT P				
INT GAUGE				

☐☐ 69. √STATUS: SOP P = 5410-6800

EMU	1	2	3	4
69. SOP P				

☐☐ 70. Remove SCOF, stow
☐☐ 71. Disconnect LCVG, stow (as reqd if transferring to ISS)
☐☐ 72. Install Multiple Water Connector cover
☐☐ 73. Install helmet, LTA
DCM ☐☐ 74. COMM mode – OFF

<u>BATTERY CHARGE CHECK INIT</u> (15 min)
AW18H ☐☐ 75. PWR/BATT CHGR EMU 1,2 BUS SEL (two) – OFF
MODE (two) – CHARGE
BUS SEL (two) – MNA(MNB)

☐☐ 76. Continue charge 15 min, minimum

<u>BATTERY CHARGE CHECK TERM</u>
When PWR/BATT CHGR EMU INPUT AMPS < 1 and 15 min minimum charge complete:
☐☐ 77. PWR/BATT CHGR EMU 1,2 BUS SEL (two) – OFF
MODE (two) – OFF

Cont next page

EMU SWAP DURING CHECKOUT (30 min) (If reqd)

NOTE
EMU(s) #_____ to be removed from airlock.
EMU(s) #_____ to be installed in airlock.
Procedure written for swap of one or two EMUs

EMU ___ ☐ 78. √Gloves installed
DCM ☐ 79. Disconnect SCU, install DCM cover
☐ 80. Stow SCU on AAP, Velcro to wall
☐ 81. Release EMU from AAP, transfer EMU to middeck
EMU ___ ☐ 82. Disconnect helmet, stow
☐ 83. Remove comm cap from LTA Restraint Bag and connect to electrical harness
☐ 84. Remove LTA Restraint Bag
☐ 85. Release EMU from middeck AAP, transfer to airlock
☐ 86. Install EMU on AAP
☐ 87. Disconnect waist ring; remove and stow any equipment stowed in HUT/LTA
☐ 88. Waist ring – engage posn
☐ 89. Connect LTA to HUT, lock

NOTE
O2 vlv for SCU connected to EMU(s) #_____
must be closed prior to checkout of EMU

AW82B ☐ 90. EV-_____ O2 vlv – CL
EMU ___ ☐ 91. Install EMU on middeck AAP
☐ 92. Attach LTA Restraint Bag, as reqd
☐ 93. Go to EMU POWERUP AND COMM CHECK, 3-2

POST EMU C/O RECONFIG (5 min)

When EMU C/O for all EMUs complete:

IV O6 ☐ 94. UHF MODE – OFF
√SPLX/EVA XMIT FREQ – 259.7/414.2
√PWR AMP – OFF
√SPLX SQUELCH – ON
R10 ☐ 95. √BIOMED CH 1 – EVA 1
√CH 2 – EVA 2
AW82B ☐ 96. EV-1,EV-2 O2 vlv (two) – CL
BOTH DCM ☐ 97. Remove SCUs, install DCM covers
☐ 98. Stow SCU on AAP, Velcro to wall
IV ML86B:C ☐ 99. cb MNC EXT ARLK HTR LINE ZN 1,2 (two) – cl
(heaters will be deactivated on MCC call)

X: SM 60 SM TABLE MAINT

☐100. Contact MCC for uplink of SM ALERT TMBU (if desired)
Changes enclosed in [ ]

Param Name	Param ID	Lower Limit	Upper Limit
EXT A/L H2O LINE T			
EXT A/L H2O SPLY ZN 1 T	0640181	43	145
EXT A/L LCG 2 SPLY ZN 1 T	0640182	49	145
EXT A/L H2O LINE T 2			
EXT A/L H2O SPLY ZN 2 T	0640184	48	145
EXT A/L LCG 2 SPLY ZN 2 T	0640185	45	145
EXT A/L O2 LN T			
EXT A/L O2 SPLY ZN 2 T	0640186	OSL	OSH

SAFER CHECKOUT (30 min if first checkout of SAFER unit,
20 min for subsequent checks)

NOTE
Procedures written for simultaneous C/O of two SAFERs

BOTH 1. Remove SAFER and SAFER CHECKOUT RESULTS Cue Card from Stowage Bag/FDF Locker

PM 2. √Inhibitor installed, properly engaged

If first SAFER CHECKOUT:

HCM 3. Remove power switch guard
4. Stow HCM

5. Remove stowage straps from thruster towers, unfold towers
6. Remove SAFER latch guards from latches (leave lanyard straps attached to towers)
7. Inspect:
Thruster tower hinges
Tower latches
√TMG not blocking thrusters
√SAFER latch guard lanyard strap attached to SAFER towers above tower hinges
8. Peel back SAFER tower TMG on both towers and install SAFER latch guards over SAFER latches
√Latch guard lanyards routed under tower TMG
Re-attach tower TMG to secure latch guards in place
9. Fold thruster towers
10. Install stowage straps

PM 11. MAN ISOL vlv – OP (dn)
12. Deploy HCM; √proper deployment

CAUTION
Minimize time with SAFER powered (~1 min)

NOTE
Have SAFER CHECKOUT RESULTS Cue Card w/proper serial number ready to record status.

From power on to entry into Test Mode, the SAFER will be in Automatic Attitude Hold (AAH) (Green LED on). Try to hold SAFER steady against a wall. Changes in SAFER attitude may result in AAH-induced thruster firings

13. As reqd, review SELF TEST SEQUENCE (refer to box next page)
14. Perform Self Test:
Start timer

HCM PWR – TST/ON
Wait until GN2 XX% PWR XX% displayed
√AAH LED (green) on
PWR – ON

Cont next page

NOTE

Be prepared to count thruster clicks (24) after PWR – TST/ON

PWR – TST/ON

Follow displayed instructions on HCM:

√ SELF TEST – WAIT displayed; if able, count thruster clicks (twenty four)

```
* If NSI CIRCUIT OPEN or FAIL: ... msg  *
* | displayed or non-responsive display:  *
* |    Note failure msg                   *
* |    Press DISP sw to resume test       *
* If HC TO DETENT msg displayed:          *
*    Note msg                             *
*    √HC grip springs to center position  *
```

When RATE CHECK displayed, rotate SAFER at least + and - 3 deg/sec sequentially in each rotational axis

15. √ GO FOR EVA or FAILED TEST displayed
16. PWR – ON
17. DISP: Record GN2%, PWR%, BATT V (SAFER CHECKOUT RESULTS Cue Card)
18. PWR – OFF
19. Stop timer, record 'ON Time' (~1 min desired)
20. √GN2% ≥ 87
    √PWR% ≥ 45
    √BATT V ≥ 35
21. Report GN2%, PWR%, BATT V, and SAFER serial number to MCC

HCM 22. MODE – ROT

CAUTION

Do not stow HCM to be used for EVA with power switch guard installed

NOTE

When stowing HCM, verify that umbilical will not snag during deployment

23. Stow HCM
24. Stow SAFER and Cue Card in Stowage Bag
25. √Inhibitor installed
26. MAN ISOL vlv – CL (up)

SELF TEST SEQUENCE (for reference only; do not perform)

HCM
1. NSI circuit test
2. SELF TEST – WAIT; √Twenty-four thruster clicks and THR LED (red) flashing
3. DEPRESS AAH
4. MODE – ROT (if in TRAN)
   MODE – TRAN
5. HC grip detent test
6. HC +X (fwd), (-X, +Y (rt), -Y, +Z (dn), -Z, +P (twist up), -P)
7. RATE CHECK; rotate SAFER at least + and - 3 deg/sec sequentially in each rotational axis

TOP

HOOK VELCRO

HOOK VELCRO

SAFER CHECKOUT RESULTS

SAFER SERIAL #_____

	GMT	ON Time	GN2%	PWR%	BATT V		GMT	ON Time	GN2%	PWR%	BATT V
1						27					
2						28					
3						29					
4						30					
5						31					
6						32					
7						33					
8						34					
9						35					
10						36					
11						37					
12						38					
13						39					
14						40					
15						41					
16						42					
17						43					
18						44					
19						45					
20						46					
21						47					
22						48					
23						49					
24						50					
25						51					
26						52					

NOTE

SAFER battery expected to last for 52 1-min checkouts and have at least 45% PWR remaining

BATTERY CHANGEOUT

GMT	OLD BATT SERIAL #	NEW BATT SERIAL #

EVA-3a/O/C

(reduced copy)

TOP
(Back of 'SAFER CHECKOUT RESULTS')

HOOK VELCRO

HOOK VELCRO

SAFER STATUS TROUBLESHOOTING

GMT					
Failure Message					NOMINAL STATUS
GN2%					87-99%
PWR%					45-99%
TANK P					> 6575 psia
TANK T					-40 to 140 degF
RATE R					± 30 deg/s
RATE P					± 30 deg/s
RATE Y					± 30 deg/s
DISPL R					± 99.9 deg
DISPL P					± 99.9 deg
DISPL Y					± 99.9 deg
BATT V					≥ 35.0 V
BATT T					50 to 90 degF
Leak					NO LEAK

GMT					
Failure Message					NOMINAL STATUS
GN2%					87-99%
PWR%					45-99%
TANK P					> 6575 psia
TANK T					-40 to 140 degF
RATE R					± 30 deg/s
RATE P					± 30 deg/s
RATE Y					± 30 deg/s
DISPL R					± 99.9 deg
DISPL P					± 99.9 deg
DISPL Y					± 99.9 deg
BATT V					≥ 35.0 V
BATT T					50 to 90 degF
Leak					NO LEAK

SAFER JET NOMENCLATURE

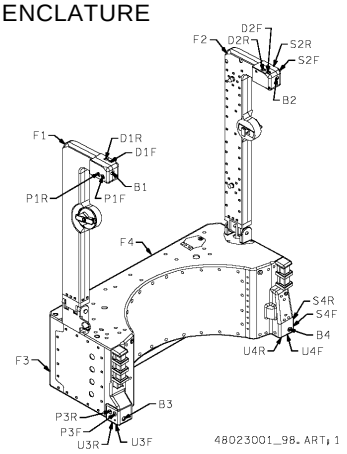

EVA-3b/O/D

(reduced copy)

REBA POWERED HARDWARE CHECKOUT (15 min)

NOTE

Procedure written for simultaneous C/O of 12 volt HDW on all EMUs

☐☐ 1. Perform REBA BATTERY INSTALL (EMU MAINT/RECHARGE), as reqd

All EMUs ☐☐ 2. √REBA sw (1 per EMU) – OFF (toward left arm of suit)

If EMU TV:

☐☐ 3. Install EMU TV on helmets 1,2; note camera addresses EV1 ___, EV2 ___ (see figure below)

PLSS ☐☐ 4. Unstow EMU TV power cable, disconnect from ground plug

☐☐ 5. Mate EMU TV power cable to EMU TV

If no EMU TV:

PLSS ☐☐ 6. √EMU TV power cable mated to ground plug

☐☐ 7. √Upper arm connections mated

☐☐ 8. √Glove heater sw (one per glove) – OFF

☐☐ 9. Connect lower arm pwr harness to gloves

NOTE

To avoid excessive battery consumption and heat buildup, deactivate heaters once heat detected at fingertips

☐☐ 10. REBA sw (1 per EMU) – ON, pull tab toward right arm of suit

☐☐ 11. Glove heater sw (one per glove) – ON

When heat detected on all outside fingertips:

☐☐ 12. Glove heater sw (one per glove) – OFF

If EMU TV:

☐☐ 13. EMU TV power pb – press, √Green LED illuminated

☐☐ 14. EMU TV power pb – press, √Green LED not illuminated

☐☐ 15. REBA sw (1 per EMU) – OFF, pull tab toward left arm of suit

☐☐ 16. Disconnect lower arm pwr harness from gloves

☐☐ 17. Stow lower arm and glove pwr harness connectors under TMG

☐☐ 18. Disconnect EMU TV power cable from EMU TV

PLSS ☐☐ 19. Connect EMU TV power cable to ground plug

☐☐ 20. Attach LTA Restraint Bag, as reqd

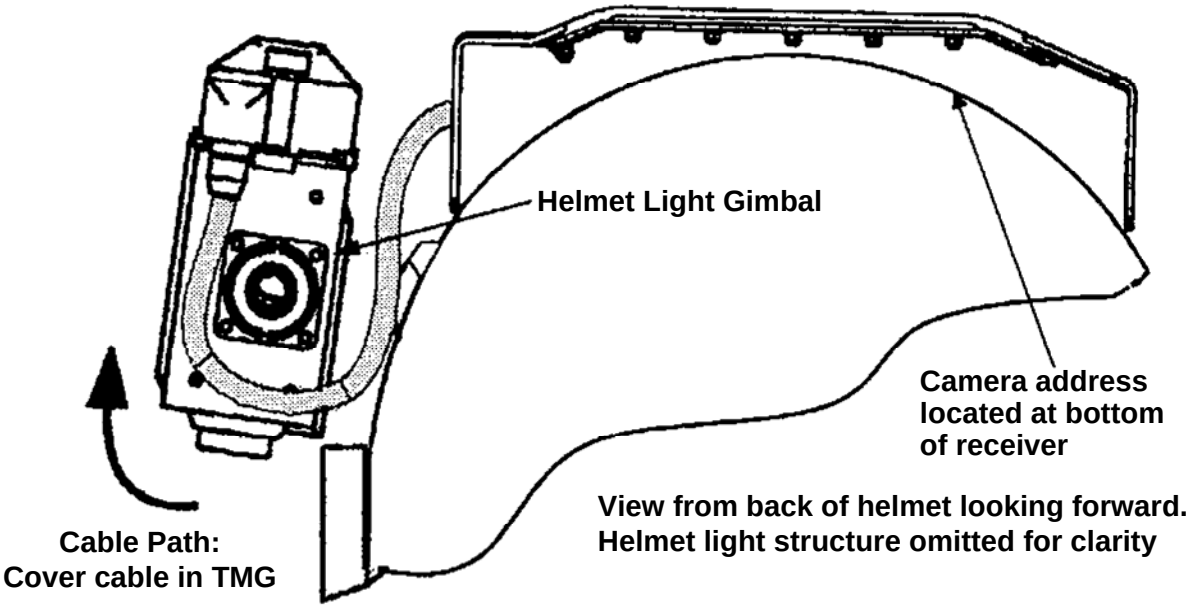

EVA PREP

MIDDECK PREP 4-2
EVA PREP 4-3
PREP FOR DONNING 4-3
EMU DONNING 4-5
EMU CHECK 4-7
EMU PURGE 4-7
EMU PREBREATHE 4-8
SAFER DONNING 4-8
EVA COMM CONFIG 4-10
EVA COMM DECONFIG 4-10
APPROVED NON-EMU HARDWARE MATRIX 4-11

WARNING

Payload bay floods exceed EMU thermal limits during operation. If EVA crew will be operating in vicinity of PLB floods, floods must be turned off now. Cooldown time may be as long as 6 hr

NOTE

Wireless Video Heater pwr should be activated at least 4 hr before EVA to ensure quality video

MIDDECK PREP (30 min)

A7 1. WIRELESS VID HTR – ON
Vol H 2. Unstow EMU Servicing Kit
AW18A 3. LTG FLOOD (four) – ON
4. √EVA Bag installed in airlock
5. √Contamination Detection Kit installed in airlock
6. √REBA sw – OFF (toward left arm of suit)
7. √Helmet lights, helmet light batteries, and EMU TVs installed on helmets
If EMU TV:
PLSS 8. √EMU TV power cable demated, connected to ground plug
9. Disconnect helmets, temp stow
HUT 10. Remove Drink Bag Restraint Bag

NOTE

Drink bag should be used within 24 hr if filled with non-iodinated water

11. Fill drink bag from galley, remove gas and insert drink bag in Restraint Bag
12. Install Drink Bag Restraint Bag in HUT and dispose of fill tool in wet trash
13. Unstow comm cap and inspect moisture barrier earphone diaphragms (MBEDs) (two) for damage. Replace if reqd (EMU Servicing Kit)
14. Apply anti-fog (EMU Servicing Kit), wipe off:
Helmets (not Fresnel lens)
EV glasses, attach to comm cap
15. Stow EMU Servicing Kit
16. Install helmets, lock
17. Attach Cuff C/L to EMUs
18. √Wrist mirrors installed
19. Stage crew preference items in EMU Equipment Bag as reqd

CAUTION

EV crewmembers should minimize application of hygiene and hydrocarbon-based products prior to EVA day to avoid introduction of irritants into EMU. Reference APPROVED NON-EMU HARDWARE MATRIX, 4-11, for acceptable items in EMU

EVA PREP (90 min)

MET _____/___:___ ____	MET _____/___:___ ____	MET _____/___:___ ____

X: SM 60 SM TABLE MAINT

1. Contact MCC for uplink of SM ALERT TMBU (if desired)
   Changes enclosed in [ ]

Param Name	Param ID	Lower Limit	Upper Limit
EXT A/L H2O LINE T			
SPLY ZN 1 T	0640181	43	100
LCG 2 SPLY ZN 1 T	0640182	36	85
H2O LINE T 2			
SPLY ZN 2 T	0640184	48	100
LCG 2 SPLY ZN 2 T	0640185	36	82
O2 LN T			
SPLY ZN 2 T	0640186	OSL	80

PREP FOR DONNING (30 min)

BOTH	DCM	☐☐☐	2. Retrieve, position SCU; remove DCM cover
		☐☐☐	3. Connect SCU to DCM, √locked
	AW82B	☐☐☐	4. EV-1,EV-2 O2 vlv (two) – op
	MO13Q	☐☐☐	5. √ARLK H2O S/O VLV – OPEN (tb-OP)
	MD(flr)	☐☐☐	6. √EMU O2 ISOL VLV – OP
	ML86B:C	☐☐☐	7. √cb MNC EXT ARLK HTR ZN 1,2 (two) – op
	L2	☐☐☐	8. √O2 XOVR SYS 1,2 (two) – OP
BOTH	DCM	☐☐☐	9. PWR – BATT

CAUTION
EMU must be on BATT pwr when airlock power supply turned on

AW18H	☐☐☐	10. PWR/BATT CHGR EMU 1,2 MODE (two) – PWR BUS SEL (two) – MNA(MNB)
DCM	☐☐☐	11. PWR – SCU
	☐☐☐	12. √STATUS: [BATT VDC] ≥ 20.3
	☐☐☐	13. Verify panels as shown next page

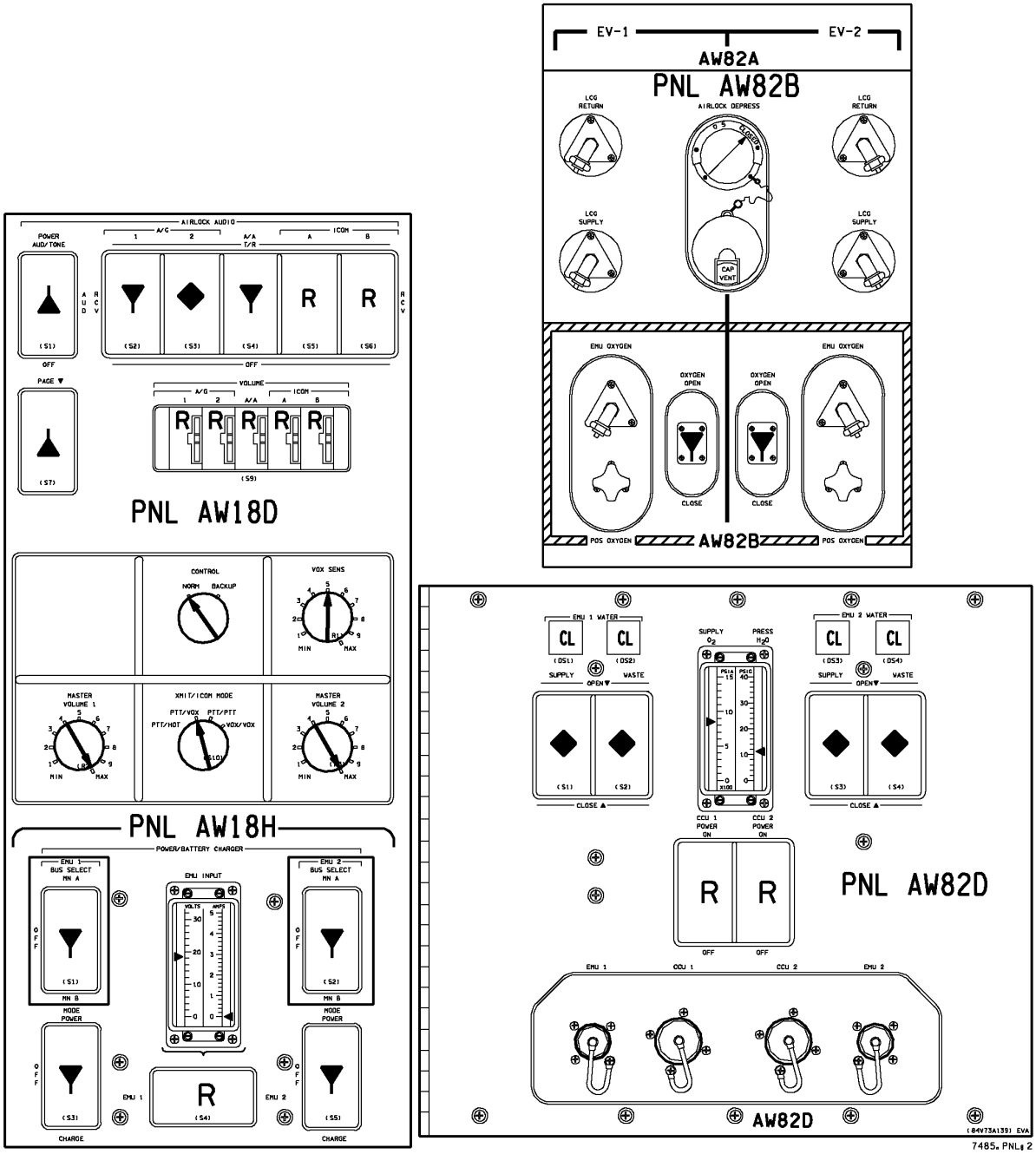
EV-1
EV-2
AW82A
PNL AW82B
LCG RETURN
AIRLOCK DEPRESS
LCG SUPPLY
CAP VENT
EMU OXYGEN
OXYGEN OPEN
CLOSE
POS OXYGEN
AW82B
AIRLOCK AUDIO
POWER AUD/TONE
A/C
A/A T/R
ICOM
OFF
PAGE
VOLUME
PNL AW18D
CONTROL
NORM
BACKUP
VOX SENS
MASTER VOLUME 1
XMIT/ICOM MODE
PTT/VOX
PTT/PTT
PTT/HOT
VOX/VOX
MASTER VOLUME 2
MIN
MAX
PNL AW18H
POWER/BATTERY CHARGER
EMU 1 BUS SELECT
MN A
MN B
EMU INPUT
VOLTS
AMPS
MODE POWER
CHARGE
EMU 1
EMU 2
EMU 1 WATER
EMU 2 WATER
CL
SUPPLY
WASTE
OPEN
CLOSE
SUPPLY
PRESS
CCU 1 POWER ON
CCU 2 POWER ON
PNL AW82D
EMU 1
CCU 1
CCU 2
EMU 2
AW82D
(84V73A139) EVA
7485. PNL: 2

IV ☐☐☐ 14. Perform EVA COMM CONFIG, steps 1-4
BOTH DCM ☐☐☐ 15. Comm FREQ – LOW
☐☐☐ 16. COMM mode – PRI (EMU data only, no audio)
☐☐☐ 17. Disconnect, transfer, temp stow LTAs, helmets, additional EMU(s) to middeck
☐☐☐ 18. Remove Dosimeter from inflight garments; insert in LCVG
☐☐☐ 19. Unstow biomed OBS/EVA cable (EMU Servicing Kit), connect to elec harness
☐☐☐ 20. Don MAG, TCU, LCVG
☐☐☐ 21. Don biomed per figure; shave 3-in patch using shave gel and razor (as reqd) (EMU Servicing Kit), clean skin using shave gel and damp towel, dry skin, install stoma seals and apply paste to electrodes, adhere to chest and secure with overtapes

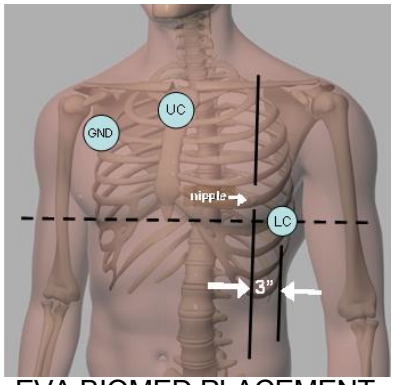

EVA BIOMED PLACEMENT

☐☐☐ 22. Don comm caps
☐☐☐ 23. Connect biomed to elec harness
IV ☐☐☐ 24. Perform EVA COMM CONFIG, steps 5 and 6 (EMU hot mic)
☐☐☐ 25. Verify biomed signal, EMU data, and RF comm with MCC
BOTH DCM ☐☐☐ 26. COMM mode – HL

NOTE
Be prepared to verify a nominal powerup sequence after the next step and verify no missing segments on display and that all tones are audible

27. PWR – BATT
Verify no missing segments during display test
Verify status (continuous) tone and warble tone audible
Verify BITE light extinguishes. Report anomalies to MCC
28. PWR – SCU

☐☐☐ 29. Doff comm caps
☐☐☐ 30. Disconnect biomed
AW18D ☐☐☐ 31. AIRLK AUD PWR – AUD/TONE

EMU DONNING (55 min)

NOTE
May be performed by EV1 and EV2 simultaneously

BOTH ☐☐☐ 32. Take one aspirin tablet (325 mg)
☐☐☐ 33. √STATUS: SOP P = 5410-6800 (compare w/gauge)
EV1 ☐☐☐ 34. √Waist ring – op
☐☐☐ 35. Don LTA, attach donning handles as reqd
If boot bladder manipulation reqd:
36. Disconnect boot from leg (sizing ring)
37. Pull up excess boot bladder around full circumference of boot disconnect
38. Connect boot to leg (sizing ring)
39. Engage Lock 1
40. √All locks (three per boot) engaged

☐☐☐ 41. Ingress airlock
☐☐☐ 42. √Suit arms aligned
☐☐☐ 43. Disconnect gloves; √wrist disconnects – op
☐☐☐ 44. Stow IV glasses
☐☐☐ 45. Don thumb loops
☐☐☐ 46. √Drink valve posn before HUT donning
☐☐☐ 47. √Biomed elec harness outside of HUT
PLSS ☐☐☐ 48. √REBA sw – OFF
☐☐☐ 49. Don HUT
☐☐☐ 50. Release thumb loops
☐☐☐ 51. √Suit arms aligned
☐☐☐ 52. Don EV glasses as reqd
☐☐☐ 53. Don comm cap
DCM ☐☐☐ 54. √COMM mode – HL, vol as reqd
☐☐☐ 55. √Comm with IV
☐☐☐ 56. Connect biomed to elec harness
☐☐☐ 57. Connect LCVG to multiple water connector, √locked
☐☐☐ 58. √Thermal cover clear of waist ring
☐☐☐ 59. Waist ring – engage posn
☐☐☐ 60. Connect waist ring to HUT, √locked
☐☐☐ 61. Remove donning handles, stow in EMU Equipment Bag; cover waist ring

CAUTION
Pulling on drink bag blue bite vlv to adjust posn can cause vlv to release from stem

☐☐☐ 62. √Drink vlv posn after HUT donning
☐☐☐ 63. √Mike boom posn
☐☐☐ 64. Don comfort gloves, wristlets
☐☐☐ 65. Wrist rings – engage posn
☐☐☐ 66. Don EV gloves, √locked
☐☐☐ 67. Tighten palm restraint straps
If REBA battery:
IV ☐☐☐ 68. √Glove heater sw (two) – OFF
☐☐☐ 69. Connect lower arm pwr harness to gloves
☐☐☐ 70. Stow slack under arm TMG
☐☐☐ 71. √Cuff C/L posn

CAUTION
Minimize fan operation with O2 ACT – OFF (~2 min)

EV1 DCM ☐☐☐ 72. FAN – ON (PWR RESTART may occur)
☐☐☐ 73. √Elec harness clear of neck ring
☐☐☐ 74. Don helmet, √locked
DCM ☐☐☐ 75. O2 ACT – IV
☐☐☐ 76. √Helmet purge vlv – cl, locked
DCM ☐☐☐ 77. PURGE vlv – cl (dn)
If EMU TV:
PLSS ☐☐☐ 78. Unstow EMU TV power cable; disconnect from ground plug
☐☐☐ 79. Mate EMU TV power cable to EMU TV
EV2 ☐☐☐ 80. Repeat steps 33-79 if done serially

EMU CHECK (5 min)

BOTH ☐☐☐ 81. √Cooling

* If cooling insufficient slowly cycle temp control vlv *
* between 7 and Max C while IV depresses and holds *
* pump priming vlv on back of EMU (30 sec min) *

☐☐☐ 82. Temp control vlv – as reqd
☐☐☐ 83. √Wrist rings – covered
☐☐☐ 84. √Waist rings – covered
DCM ☐☐☐ 85. √COMM mode – HL
☐☐☐ 86. √WATER – OFF
☐☐☐ 87. √PWR – SCU
☐☐☐ 88. √FAN – ON
☐☐☐ 89. √Comm FREQ – LOW
☐☐☐ 90. √Helmet Light ops
☐☐☐ 91. √Helmet purge vlv – cl, locked
DCM ☐☐☐ 92. √PURGE vlv – cl (dn)
☐☐☐ 93. DISP – STATUS: until LEAK CHECK? msg displayed
DISP –YES (hold for 2 sec), follow displayed instructions

* If PRESS FAIL/SUIT P X.X or LEAKAGE HI | SUIT P X.X, *
* go to FAILED LEAK CHECK (14.7/10.2 PSI), CC 6-4 *
* (Cue Card) *

EMU PURGE

MET _____/____:___ _____	MET _____/____:___ _____	MET _____/____:___ _____

NOTE
Flex arms and legs periodically and avoid overcooling during purge/prebreathe

CABIN P	PURGE DURATION (min)
10.2	8
14.7	12

BOTH DCM ☐☐☐ 1. O2 ACT – PRESS
☐☐☐ 2. Verify no EMU fit issues
☐☐☐ 3. PURGE vlv – op (up), begin purge clock
☐☐☐ 4. When N2 purge complete (per table):
PURGE vlv – cl (dn)
O2 ACT – IV

EMU PREBREATHE

MET _____/___:___ ____	MET _____/___:___ ____	MET _____/___:___ ____

CABIN P		PREBREATHE DURATION
10.2	12 hr	01:15
	24 hr	00:40
14.7		04:00

		☐☐☐	1. Begin prebreathe clock
IV	R1	☐☐☐	2. O2 TK3 HTR A(B) – as reqd
		☐☐☐	3. Egress AAP, stow handles
IV	AW82B	☐☐☐	4. AIRLK DEPRESS vlv cap – vent, remove, stow
		☐☐☐	5. Remove loose equipment
		☐☐☐	6. If reqd, stow REBA jumper cable

SAFER DONNING (If reqd)

IV		☐☐☐	7. Remove SAFER from Stowage Bag
		☐☐☐	8. Remove stowage straps from thruster towers, stow in EMU Equipment Bag; unfold thruster towers
		☐☐☐	9. Remove SAFER latch guard from SAFER latch (leave lanyard strap attached to thruster tower)
		☐☐☐	10. Inspect: Thruster tower hinges Tower latches √TMG not blocking thrusters √SAFER latch guard lanyard strap attached to SAFER towers above tower hinges
		☐☐☐	11. √TMG clear from SAFER striker plate on EMU PLSS
	PM	☐☐☐	12. Remove Inhibitor; close, fasten port cover
		☐☐☐	13. MAN ISOL vlv – OP (dn)
		☐☐☐	14. Latch – PRELOAD
		☐☐☐	15. Rotate latch ccw to recess butterfly in housing

> CAUTION
> Rotating ccw past soft stop can bind latch

		☐☐☐	16. Rotate latch ccw to soft stop
		☐☐☐	If reqd: 17. Rotate latch cw to align latch collar with square bolt head
		☐☐☐	18. Latch – ENG
		☐☐☐	19. Mate PLSS to thruster towers
		☐☐☐	20. Push latch in and rotate cw until stop (~90°)

> * If latch will not engage: *
> * Latch – PRELOAD *
> * Rotate latch ccw until soft stop *
> * Return to step 17 *

		☐☐☐	21. Latch – PRELOAD
		☐☐☐	22. Rotate latch cw until ratcheting

> CAUTION
> Rotating ccw may disengage SAFER

		☐☐☐	23. Continue ratcheting until lock marking on latch, tower aligned
		☐☐☐	24. Latch – LCK
		☐☐☐	25. Peel back SAFER tower TMG on both towers and install SAFER latch guards over SAFER latches √Latch guard lanyards routed under tower TMG Re-attach tower TMG to secure latch guards in place
		☐☐☐	26. √Latch butterfly is perpendicular to slot on PLSS
		☐☐☐	27. √Access to HCM deploy lever
		☐☐☐	28. √TMG not blocking thruster
		☐☐☐	29. Repeat for SAFER 2

As reqd per MCC,

EV1, EV2 — Set battery amp-hours:

DCM
- ☐☐☐ 30. DISP – STATUS until BATT? 32.0AH displayed
- ☐☐☐ 31. DISP – YES (hold for 2 sec)
- ☐☐☐ 32. Use DISP to status to desired value
- ☐☐☐ 33. When desired value selected, DISP – YES (hold for 2 sec)

IV
- ☐☐☐ 34. Install MWS and BRTs (as reqd)

If DCS 760 EVA camera used:

Charger
- ☐☐☐ 35. SW2 CAMERA PWR – OFF (LED off)

DCS 760
- ☐☐☐ 36. Disconnect DCS 760 pwr cable from DC PWR ADAPTER port
- ☐☐☐ 37. Close thermal cover on DC PWR ADAPTER port or connect Ext Camera pwr cable to DC PWR ADAPTER port (as reqd)

EVA Flash
- ☐☐☐ 38. Install flash batteries (two) (as reqd)
- ☐☐☐ 39. √EVA tools installed in airlock
- ☐☐☐ 40. As reqd, perform BOOSTER FAN DEACTIVATION/REMOVAL (AIRLOCK CONFIG)

A/L
- ☐☐☐ 41. Remove, stow appropriate vent ducts to allow hatch closure

MD(flr)
- ☐☐☐ 42. As reqd, disconnect vent duct from middeck floor fitting; stow
- ☐☐☐ 43. As reqd, unstow, install diffuser cap on middeck floor fitting
- ☐☐☐ 44. √Loose middeck-stowed items clear of inner hatch and middeck diffuser cap air flow

DCM
- ☐☐☐ 45. Remove WATER switch guard (two), stow in EMU Equipment Bag
- ☐☐☐ 46. REBA sw – ON (toward right arm of suit)

If EMU TV:
- ☐☐☐ 47. EMU TV power pb – press, √Green LED illuminated

If airlock with aft hatch:

A/L(flr)
- ☐☐☐ 48. Deploy floor EVA hatch supports
- ☐☐☐ 49. Egress airlock
- ☐☐☐ 50. Inner hatch – close, lock
- ☐☐☐ 51. √Inner hatch Equal vlv caps (two) – removed
- ☐☐☐ 52. Inner hatch Equal vlv (two) – OFF
- ☐☐☐ 53. When prebreathe time complete, √MCC for GO to DEPRESS/REPRESS (Cue Card)

EVA COMM CONFIG

R14:C 1. √cb MNA UHF EVA – cl
√MNC UHF EVA – cl
O6 2. √UHF SPLX/EVA XMIT FREQ – 259.7/414.2
√PWR AMP – OFF
√EVA STRING – 1
UHF MODE – EVA
IVA ATU 3. √AUD A/G 1(2) – T/R
R10 4. BIOMED CH 1 – EVA 1
2 – EVA 2

If docked with ISS and EVA comm on A/G 1:

NOTE
In step 5, A/G 1 docked hardline disabled.
UHF will become A/G 1 Shuttle-to-ISS link

5. √MCC and ISS that UHF configured and in Public Call
A1R AUD CTR SPACELAB A/G 1 – OFF

A1R 6. AUD CTR UHF A/G 1(2) – T/R
√2(1) – OFF
√A/A – OFF

EVA COMM DECONFIG

O6 1. UHF MODE – OFF
√SPLX/EVA XMIT FREQ – 259.7/414.2
√PWR AMP – OFF
√SPLX SQUELCH – ON
If docked with ISS and EVA comm on A/G 1:
A1R 2. AUD CTR SPACELAB A/G 1 – ON
3. AUD CTR UHF A/G 1(2) – OFF
√2(1) – OFF
√A/A – OFF

APPROVED NON-EMU HARDWARE MATRIX

Item	Part Number	Item	Part Number	Item	Part Number
Passive Dosimeter	SED11100212	Band-Aids	8137004444	Genoptic Ophthalmic Ointment	17478-284-35
Panty Shield	S019BY2033	Band-Aids	8137004431	Kerlix Dressing	6715
Sock	528-40802	Band-Aids	8137004430	Kerlix Dressing	K6715
Sock	ST11C802	Band-Aids	09681	Kling Dressing	6923
Sock Liner	ST17C3309	Band-Aids	555-3036	Lidocaine Jelly	186033036
Ponytail Holder	528-41572	Band-Aid Sheer Dot	4930	Lotrimin Cream	0085-0963-17
Croakie - Modified	528-21224	Band-Aid Strips	NON256602	Moleskin	528-4304-1
GRD Croakie	CP-3-XX-XX1-XX	Band-Aid Sheer Spot	555-8243	Neosporin Plus Cream	0501-3712-05
Croakie	528-41822	Benzoin Swabs	26-06-09	Polysporin Ointment	81079887
Eye Glasses	CP-3-XX-XX-XX	Benzoin Swabs	26-06-19	Polytrim	23782410
OBS Cable	SED42100961	Bioclusive	2461	Povidone Iodine Swabs	26-02-86
OBS Signal Cond	16843	Blistex	1015798221	Pred Forte	1198018001
OBS Sternal Harness	SH42100149	Blistex	10157-9920-2	Proparacaine	998001615
OBS Sternal Harness	SH46115992	Ciloxan 0.3%	0065-0654-35	Providone-Iodine Swabs	4335260286
OBS Sternal Harness	13726	Ciloxan Ointment	65065625	Silvadene Cream	88105020
MBED	528-21260	Ciprofloxacin Ointment	0065-0654-35	Silvadene Cream	61570-131-20
Russian Dosimeter	IBMP-CPD-001	Clotrimazole Cream	5167212751	Steri-Strip	R1547
3" Ace Bandage	23593-130	Cortisporin Ophthalmic	615003675	Steri-Strip	R1546
4" Ace Bandage	54251A7	Coverlets	01306	Tears Naturale	65041830
6" Ace Bandage	54252A7	Cyclogyl	65039715		
4" x 4" Gauze	555-6284	Dermabond	DB12	Tegaderm	1624W
4" x 4" Vaseline Gauze	8884-414600	Dermabond	301128243	Tegaderm Dressing	1626
Adaptec Dressing	K6112	Dermicel Tape	5143	Telfa Pads	890-2865
Adaptec Non-adhering Dressing	2012	Dermicel Tape	5144	Tobrex Solution	65064305
Afrin Nasal Spray	8575608	Elastoplast Tape	23631-040X	Topicort	99207-011-15
Auralgan	46100010	Eye Pads	J8773	Triamcinolone Acetonide Dental Paste	5167212675
Bacitracin	2438506003	Famciclovir	0007-4117-13	Triamcinolone Cream	4580206435
Bactroban Ointment	0029-1527-22	Gauze Pads	2337	VIROPTIC	61570-037-75
Bactroban Ointment	29152544	Gauze Pads	555-6284	Zovirax Ointment	73099394

This Page Intentionally Blank

EMU STATUS

EMU STATUS

PARAMETER	NORMAL STATUS	EV1	EV2	EV1	EV2	EV1	EV2
O2 POS	EVA						
SUBLM P	2.0 to 4.2 psia						
TIME EV	HR:MIN since PWR-BATT						
TIME LF	HR:MIN remaining at present use rate						
%PWR (O2) LF	Limiting consumable displayed						
%O2 (PWR) LF	Nonlimiting consumable displayed						
SUIT P	4.2 to 4.4 psid						
	(4.2 to 5.5 psid post depress)						
O2 P	150 to 950 psia						
O2 RATE	0 to 4.0 psi/min						
SOP P	5410 to 6800 psia						
BAT VDC	≥ 16.7						
BAT AMP	3.0 to 4.0						
RPM	18.0 to 20.0 K						
CO2	0.2 to 4.0 mmHg						
H2O TEMP	32 to 75 degF						
H2O GP	14.0 to 16.0 psid						
H2O WP	14.0 to 16.0 psid						
DATA?	COMBO						
BATT	32.0 AH (or as directed)						
GAUGE	4.2 to 4.4 psid						
	(4.2 to 5.5 psid post depress)						

EMU Status Short Stack: Used to periodically (every hour for the first 6.5 hr, then every 10 min) report to MCC-H if the EMU data downlink is not available

PARAMETER	EV	EV	EV	EV	EV	EV	EV	EV
TIME EV								
TIME LF								
%PWR (O2) LF								
%O2 (PWR) LF								

IF O2 LIMITING CONSUMABLE

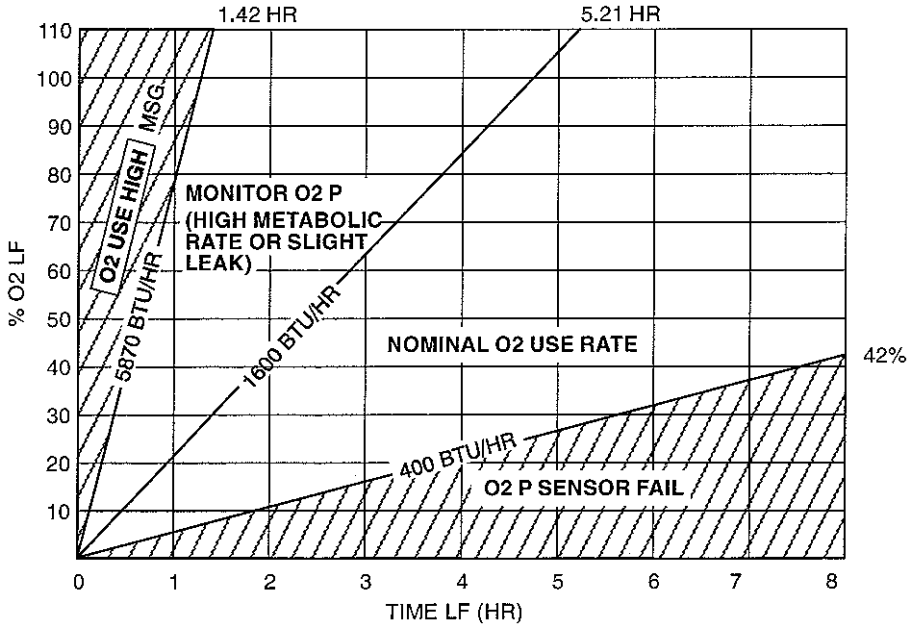

IF POWER LIMITING CONSUMABLE

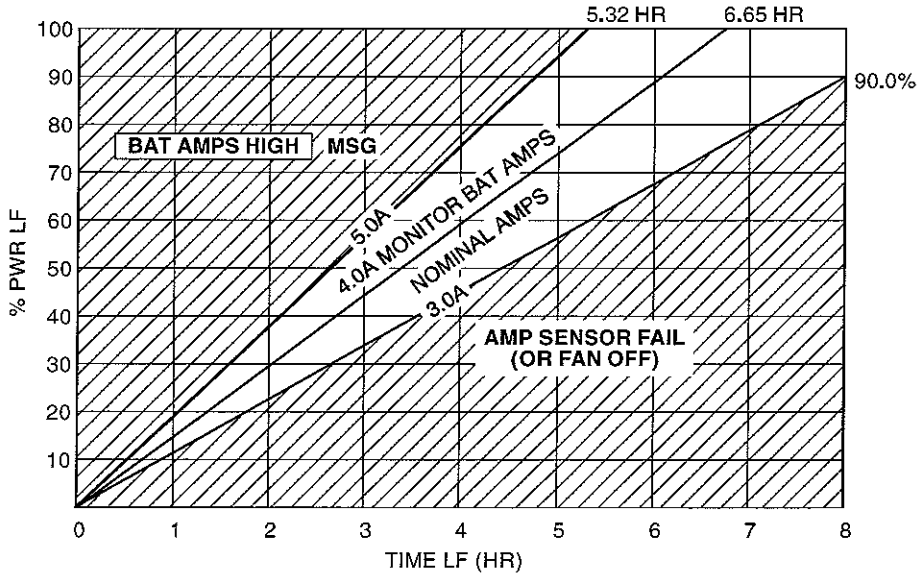

This Page Intentionally Blank

DEPRESS/REPRESS

TOP

HOOK VELCRO

HOOK VELCRO

DEPRESS/REPRESS

DEPRESS (10 min)

When prebreathe complete

DCM
1. √Comm FREQ – LOW
2. COMM mode – PRI

AW82B
3. AIRLK DEPRESS vlv – 5, EV ALERT TONE, monitor suit P gauge < 5.5
   * If gauge > 5.5, stop depress, √MCC *
4. Airlock at 6.0, EV ALERT TONE
5. When airlock at 5.0, AIRLK DEPRESS vlv – CL, EV ALERT TONE

BOTH DCM
6. DISP – STATUS: until LEAK CHECK ? displayed, DISP – YES (hold for 2 sec), follow displayed instructions
   * If LEAKAGE HI | SUIT P X.X, go to FAILED *
   * LEAK CHECK (5 PSI), reverse side *
7. √O2 ACT – EVA

AW82B
8. AIRLK DEPRESS vlv – 0, EV ALERT TONE, monitor suit P gauge < 5.5
   * If gauge > 5.5, stop depress, √MCC *

9. Attach waist tether(s) to A/L D-ring for egress

BOTH
10. Airlock dP/dT ~0, EV ALERT TONE
11. When outer hatch ΔP < 0.5, outer hatch – open, stow

AW82B
12. AIRLK DEPRESS vlv – CL

POST DEPRESS (5 min)

BOTH DCM
1. PWR – BATT, EV WARN TONE (IV record MET _ _:_ _) PET = 00:00

AW18H
2. PWR/BATT CHGR EMU 1,2 BUS SEL (two) – OFF
3. Disc SCU; install DCM cover
4. Stow SCU on AAP, Velcro to wall

DCM
5. Temp control vlv – Max H
6. WATER – ON
7. √DCM blank, BITE off
8. Temp control vlv – 3 to MAX C
9. √STATUS, compare to Cuff C/L, 1 (IV record)
10. Visors as reqd
11. Perform AIRLOCK EGRESS, Cuff C/L, 47, or Flight Specific Timeline

IV ML86B:C
12. cb MNC EXT ARLK HTR LINE ZN 1,2 (two) – cl

PRE REPRESS (5 min)

IV ML86B:C
1. √cb MNC EXT ARLK HTR LINE ZN 1,2 (two) – op

MD(flr)
2. √EMU O2 ISOL vlv – OP

DCM
3. √SCUs connected to DCM
4. √WATER – OFF for 2 min

BOTH
5. √Outer hatch closed and locked
6. Disc waist tethers, attach to EMU

AW82B
7. √EV-1,EV-2 O2 vlv (two) – OP

AW18H
8. PWR/BATT CHGR EMU 1,2 BUS SEL (two) – MNA(MNB)

DCM
9. PWR – SCU, EV WARN TONE (IV record MET _ _:_ _)

REPRESS (10 min)

> WARNING
> If on SOP, leave O2 ACT – EVA thru airlock repress

BOTH DCM
1. O2 ACT – PRESS
2. COMM mode – HL

NOTE
IV expect dP/dT alarm during repress

AW82B
3. √AIRLK DEPRESS vlv – CL
4. Inner hatch Equal vlv (one) – throttle OFF to NORM (as reqd), EV ALERT TONE
5. Airlock at 4.0, EV ALERT TONE
6. When airlock at 5.0, Equal vlv – OFF, EV ALERT TONE

DCM
7. √Airlock pressure integrity (2 min, ΔP ≤ 0.1 psi)
8. √EV Glove heaters – OFF, gloves clean

> WARNING
> If Cuff 1 symp resolve upon repress, report as Cuff 2
> If any DCS, leave O2 ACT – PRESS

DCM
9. O2 ACT – IV
10. Inner hatch Equal vlv (one) – NORM, EV ALERT TONE
11. Airlock dP/dT ~0, EV ALERT TONE
12. Go to POST EVA

EVA-1a/NOM/O/J

HOOK VELCRO

HOOK VELCRO

DEPRESS/REPRESS

TOP

HOOK VELCRO

DEPRESS/REPRESS

DEPRESS (25 min)

When prebreathe complete

DCM
1. √Comm FREQ – LOW
2. COMM mode – PRI

AW82B
3. AIRLK DEPRESS vlv – 5, EV ALERT TONE, monitor suit P gauge < 5.5
   * If gauge > 5.5, stop depress, √MCC *
4. Airlock at 6.0, EV ALERT TONE
5. When airlock at 5.0, AIRLK DEPRESS vlv – CL, EV ALERT TONE

BOTH DCM
6. DISP – STATUS: until LEAK CHECK ? displayed, DISP – YES (hold for 2 sec), follow displayed instructions
   * If LEAKAGE HI | SUIT P X.X, go to FAILED *
   * LEAK CHECK (5 PSI), reverse side *
7. √O2 ACT – EVA
8. √MCC for aft module pressure integrity

AW82B
9. AIRLK DEPRESS vlv – 0, EV ALERT TONE, monitor suit P gauge < 5.5
   * If gauge > 5.5, stop depress, √MCC *
10. Airlock dP/dT ~0, EV ALERT TONE

POST DEPRESS (15 min)

BOTH DCM
1. PWR – BATT, EV WARN TONE (IV record MET _ _:_ _) PET = 00:00

AW18H
2. PWR/BATT CHGR EMU 1,2 BUS SEL (two) – OFF
3. Disc SCUs; install DCM covers
4. Stow SCUs on AAP, Velcro to wall
5. When EVA hatch ΔP < 0.5, EVA hatch – part op

AW82B
6. AIRLK DEPRESS vlv – CL
7. Attach waist tether(s) to A/L D-ring for egress
8. EVA hatch – open, stow

DCM
9. Temp control vlv – Max H
10. WATER – ON
11. √DCM blank, BITE off
12. Temp control vlv – 3 to MAX C
13. √STATUS, compare to Cuff C/L, 1 (IV record)
14. Visors as reqd
15. Perform AIRLOCK EGRESS, Cuff C/L, 47, or Flight Specific Timeline

IV ML86B:C
16. cb MNC EXT ARLK HTR LINE ZN 1,2 (two) – cl

PRE REPRESS (5 min)

IV ML86B:C
1. √cb MNC EXT ARLK HTR LINE ZN 1,2 (two) – op

MD(flr)
2. √EMU O2 ISOL vlv – OP

BOTH DCM
3. √WATER – OFF
4. √EVA hatch closed, locked
5. Unstow SCU, remove DCM cover, connect SCU, √locked
6. Disc waist tethers, attach to EMU

AW82B
7. √EV-1,EV-2 O2 vlv (two) – OP

AW18H
8. PWR/BATT CHGR EMU 1,2 BUS SEL (two) – MNA(MNB)

DCM
9. PWR – SCU, EV WARN TONE (IV record MET _ _:_ _)

REPRESS (20 min)

> WARNING
> If on SOP, leave O2 ACT – EVA thru airlock repress

BOTH DCM
1. O2 ACT – PRESS
2. COMM mode – HL

> NOTE
> IV1 expect dP/dT alarm during repress

AW82B
3. √AIRLK DEPRESS vlv – CL
4. Inner hatch Equal vlv (one) – throttle OFF to NORM (as reqd), EV ALERT TONE
5. Airlock at 4.0, EV ALERT TONE
6. When airlock at 5.0, Equal vlv (two) – OFF, EV ALERT TONE

DCM
7. √Airlock pressure integrity (4 min, ΔP ≤ 0.1 psi)
8. √EV Glove heaters – OFF, gloves clean

> WARNING
> If Cuff 1 symp resolve upon repress, report as Cuff 2
> If any DCS, leave O2 ACT – PRESS

DCM
9. O2 ACT – IV
10. Inner hatch Equal vlv (one) – NORM, EV ALERT TONE
11. Airlock dP/dT ~0, EV ALERT TONE
12. Go to POST EVA

EVA-2a/TNL/O/V

HOOK VELCRO

FAILED LEAK CHECK

HOOK VELCRO

FAILED LEAK CHECK (5 PSI)

1. Leaking EMU: Repeat leak check on watch and gauge as follows:
   O2 ACT – PRESS until SUIT P = 4.2 to 4.4 and stable, compare with gauge then
   O2 ACT – IV, start timing
   (1 min, Max ΔP = 0.3 psi)
2. If leak check passed:
   Return to DEPRESS/REPRESS Cue Card, DEPRESS, step 7 (suit pressure sensor unreliable) >>

BOTH IV — Inner Hatch

3. O2 ACT – IV
4. Equal vlv (one) – NORM
   When ΔP < 0.5, open inner hatch
   Equal vlv (one) – OFF

DCM

5. Repeat leak check as follows:
   √PURGE vlv – cl (dn)
   O2 ACT – PRESS, until SUIT P = 4.2 to 4.4 and stable, compare with gauge then
   O2 ACT – IV, start timing
   (1 min, Max ΔP = 0.3 psi)
6. Contact MCC

EVA-1b/O/J
EVA-2b/O/J

HOOK VELCRO

FAILED LEAK CHECK (14.7/10.2 PSI)

NOTE
The following steps are performed on the leaking EMU only

IV

1. Leaking EMU: O2 ACT – PRESS
2. Rotate lower arm assemblies 180 degrees cw and 360 degrees ccw
3. Align suit arms
4. √Sizing rings locked
5. Swivel hips from side to side
6. Repeat leak check as follows:
   √Helmet purge vlv – cl, locked

DCM

   √PURGE vlv – cl (dn)
   √O2 ACT – PRESS until SUIT P = 4.2–4.4 and stable (compare w/gauge)
   O2 ACT – IV, start timing, 1 min (during EMU CHECKOUT, 2 min)
   (Max ΔP = 0.3 psi)
7. If leak check passed, go to step 11
   If leak check failed:

DCM

   PURGE vlv – op (up), O2 ACT – OFF
   FAN – OFF (if EVA PREP)
   Cycle/inspect suit disconnects as follows:
   Gloves, helmet (leave off), LTA, boots (if removed in EVA PREP)
   FAN – ON (if EVA PREP)
8. Install helmet, repeat leak check step 6, then:
9. If leak check passed, go to step 11
   If leak check failed:

DCM

   PURGE vlv – op (up), O2 ACT – OFF
   FAN – OFF (if EVA PREP)
   Cycle/inspect suit disconnects as follows:
   Gloves, helmet (leave off)
   Helmet purge vlv, Sizing rings
   LiOH cartridge (O-rings)
   FAN – ON (if EVA PREP)
10. Install helmet, repeat leak check step 6, then:
11. If leak check passed:
    √Waist ring, wrist rings covered
    Continue EMU CHECKOUT or EVA PREP >>
12. If leak check failed (EMU lost):
    Contact MCC

HOOK VELCRO

HOOK VELCRO

FLIGHT SPECIFIC TIMELINES

This Page Intentionally Blank

TOOLS AND STOWAGE

PORT LIGHTWEIGHT TOOL STOWAGE ASSEMBLY (TSA) 8-2
PGT CHECKOUT 8-3
PGSC-PGT CONNECTION (A31P AND 760XD) 8-4
PROGRAM PGT SETTINGS 8-5
DOWNLOAD/ERASE EVENT LOG 8-5
PGT CONTINGENCIES 8-6
PGT STANDARD SETTINGS 8-7

PORT LIGHTWEIGHT TOOL STOWAGE ASSEMBLY (TSA) I

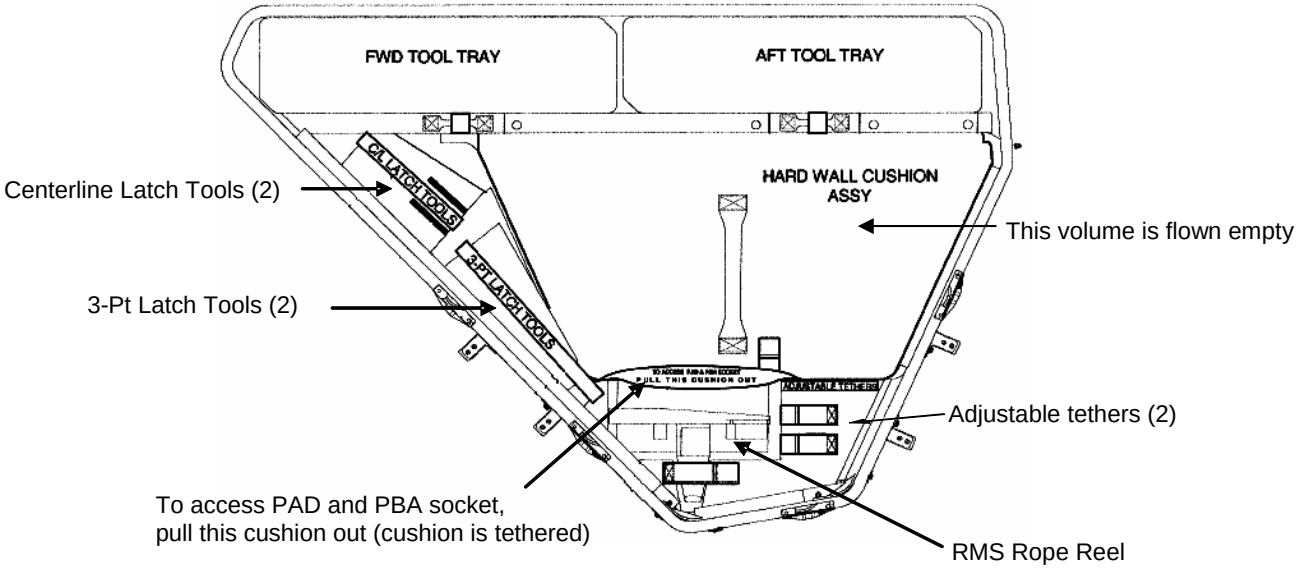

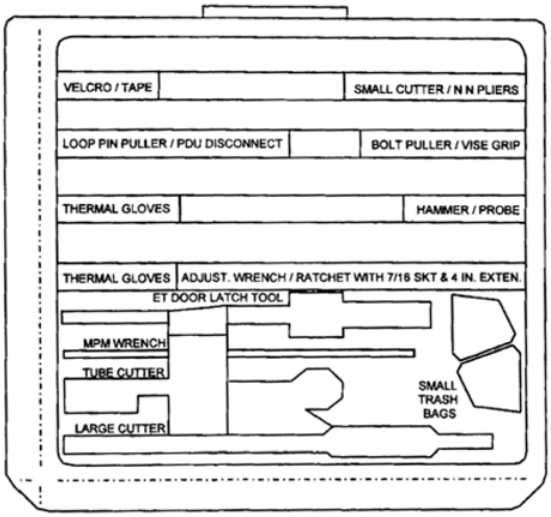

Forward Tray layout and Labels

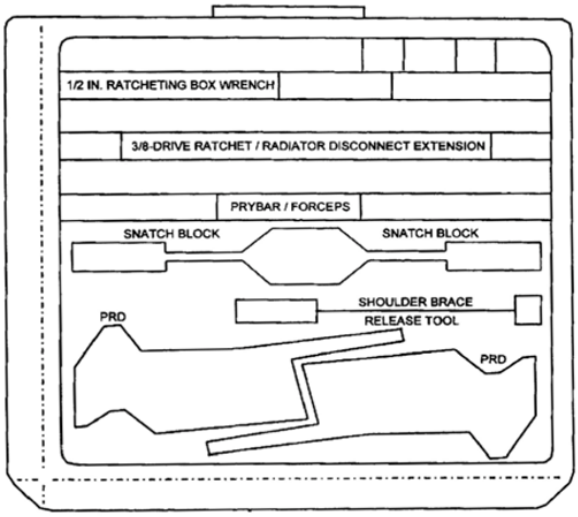

Aft Tray Layout and Labels

PGT CHECKOUT

1. Unstow PGT
2. √PWR – OFF
3. √Battery connector covering removed
4. Install battery
5. Ratchet collar – not MTR
6. Cycle MTL settings
7. Cycle bayonette fittings
8. Speed collar – CAL
9. PWR – ON
10. √'TRIG TO CAL' on display
11. Press, release trigger to calibrate
12. √'CAL PASSED' on display
13. Ratchet collar – MTR
14. √Illumination of all LEDs and 'LED TEST' displayed
15. Press trigger and hold
    √BATT VDC ≥ 36.0
16. Speed collar – cw
17. Press trigger and √drive rotates cw
18. Speed collar – ccw
19. Press trigger and √drive rotates ccw
20. To verify programmed settings, cycle MODE/torque collar/speed collar and compare with PGT SETTINGS TABLE
21. PWR – OFF

PGSC-PGT CONNECTION (A31P AND 760XD)

PGSC 1. √PGSC equipped with RS422 PCMCIA Card and adapters (two)
PGT 2. √PWR – OFF
√PGT Battery installed
3. Ratchet collar – not MTR

CAUTION
Do not over-torque serial port cover screw

4. Open PGT serial port cover using 3/32" Allen Wrench attached to the PGT-RS422 Cable
5. Connect PGT-RS422 Cable to PGT Remote Programming Port
PGSC 6. Connect PGT-RS422 Cable to COM 2 or COM 4 adapter box, as desired
PGT 7. PWR – ON
PGSC If PGSC not powered:
8. PGSC PWR – ON
9. Select SHUTTLE APPS icon on PGSC Windows desktop, then select either 'PGT (COM 2)' or 'PGT (COM 4)' icon
(Use PGT icon corresponding to COM port selected in step 6)
10. √Tool Communication Check dialog box appears
√Serial Connection verified
√Intool software version 2.2

* If dialog box in previous step indicates failure to read software version or reports a communication error, verify electrical connections are fully mated at identified locations below (1-5), then clear dialog box, close application, and repeat steps 9 and 10 *

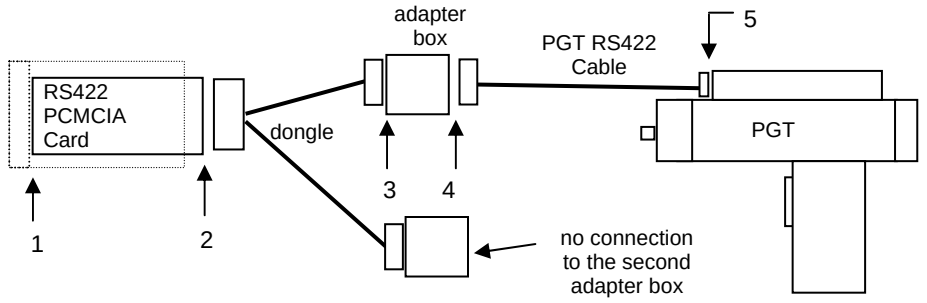

1 = RS422 PCMCIA Card to PGSC (check PC card is fully engaged)
2 = RS422 PCMCIA Card to dongle
3 = dongle to adapter box
4 = adapter box to PGT RS422 Cable
5 = PGT RS422 cable to PGT Remote Programming Port

11. Select CONTINUE

PROGRAM PGT SETTINGS

1. Perform PGSC-PGT CONNECTION (A31P AND 760XD)

If loading settings from a set file in C:\SPOCAPPS\PGT32\SETTINGS:

2. Select FILE, OPEN ...
3. Select desired settings file, OPEN
4. Select TORQUE/REVOLUTIONS SETTINGS tab in Pistol Grip Tool Remote Software window
5. Enter changes to table as necessary
6. Select SPEED & POWER MANAGEMENT SETTINGS tab
7. Enter changes to table as necessary
8. √Ratchet collar – not MTR
9. Select TOOL, SEND DATA TO TOOL
10. Select desired tables for upload
11. √All sent settings – black on gray (programmed successfully)

If saving new settings to a file:

12. Select FILE, SAVE AS ...
13. Type in new file name, SAVE
14. Verify programmed settings on PGT by cycling MODE/torque collar/speed collar; compare displayed values to expected values

DOWNLOAD/ERASE EVENT LOG

1. Perform PGSC-PGT CONNECTION (A31P AND 760XD)
2. √Ratchet collar – not MTR
3. Select EVENT LOG tab
4. Select TOOL, GET DATA FROM TOOL...
5. Select TOOL EVENT LOG DATA (READ-ONLY)
6. √DOWNLOAD PGT EVENT LOG dialog box appears
7. Select YES to download data
8. √SAVE EVENT LOG DATA TO FILE dialog box appears
9. Enter name for file
10. Select SAVE
11. √Event Log data displayed in viewer
12. If erasing Event Log data from PGT, select OK in ERASE EVENT LOG dialog box

PGT CONTINGENCIES

MESSAGE	CORRECTIVE ACTIONS
BATTRY HITEMP	If alternate battery avail: power off, change battery. Otherwise, power off, switch to Ratchet mode.
BATTRY LOTEMP (blinking)	Drive tool with no load to increase battery temperature. If no joy and alternate battery avail: power off, change battery. Otherwise, power off, switch to Ratchet mode.
BATTRY LOVOLT (blinking)	Continue using until tool is unable to deliver sufficient torque. If no joy and alternate battery avail: Power off, change battery. Otherwise, power off, switch to Ratchet mode.
CAL FAILED	Press, release trigger to repeat calibration. If no joy, power cycle, calibrate. If no joy, power off, switch to Ratchet mode.
COLLAR ERROR	Cycle Torque and Speed collars to clear error. If no joy, power cycle, calibrate. If no joy, power off, switch to Ratchet mode.
COMPAR ERROR	Cycle Torque collar and A/B mode switch. If no joy, power cycle, calibrate. If no joy, power off, switch to Ratchet mode.
EEPROM WR ERR (blinking)	Power cycle, calibrate. If no joy, power off, switch to Ratchet mode.
HI TORQ	If fault occurs during engagement and MTL did not slip, ignore message. Otherwise: power cycle, calibrate. If no joy, power off, switch to Ratchet mode.
HICURR	Reattempt operation. If no joy, power cycle, calibrate. If no joy, power off, switch to Ratchet mode.
HYBRID HITEMP	Power cycle, calibrate. If no joy, power off, switch to Ratchet mode.
LO TORQ	Reattempt operation until desired torque is reached. If no joy, power cycle, calibrate. If no joy, power off, switch to Ratchet mode.
LOCURR	Reattempt operation. If no joy, power cycle, calibrate. If no joy, power off, switch to Ratchet mode.
LOG IS FULL (blinking)	Continue operation.
MOTOR HITEMP	Power off, switch to Ratchet mode.
OVER CURR	Power cycle, calibrate. If no joy, power off, switch to Ratchet mode.
SLFTST FAIL X	Power cycle, calibrate. If no joy, power off, switch to Ratchet mode.

PGT STANDARD SETTINGS

SETTINGS	TORQUE SETPOINT (FT-LB)	TORQUE WINDOW (FT-LB)	TORQUE THRESHOLD (FT-LB)	TURNS
A1	2.5	± 1.0	1.0	--
A2	3.8	± 1.0	1.0	--
A3	4.8	± 1.0	1.0	--
A4	6.3	± 1.0	1.0	--
A5	7.0	± 1.0	1.0	--
A6	8.3	± 1.0	1.0	--
A7	9.2	± 1.0	1.0	--
B1	12.0	± 1.0	1.0	--
B2	16.0	± 1.2	1.0	--
B3	18.4	± 1.7	1.0	--
B4	19.4	± 1.9	1.0	--
B5	22.0	± 2.0	1.0	--
B6	24.0	± 2.0	1.0	--
B7	25.5	± 2.0	1.0	--

SETTINGS	CCW1	CCW2	CCW3	CW3	CW2	CW1
SPEED (RPM)	10	30	60	60	30	10

SLEEP TIME	15 min
AUTO – OFF TIME	30 min

MULTI-SETTING TORQUE LIMITER (MTL) SETTINGS
2.5
5.5
10.5
15.5
23.5
30.5

This Page Intentionally Blank

POST EVA

POST EVA 9-2
SUIT DOFFING 9-2
SAFER DOFFING 9-2
EMU WATER RECHARGE 9-3
SAFER STOW 9-3
SUIT DRYING/SEAL WIPE 9-4
OXYGEN RECHARGE VERIFICATION 9-4
WATER FILL VERIFICATION 9-4
EMU POWERDOWN/OVERNIGHT STOW 9-5

POST EVA (00:45 if NOT performing 'If reqd' proc blocks)
(01:25 if performing all 'If reqd' proc blocks)

SUIT DOFFING

> WARNING
> Do not doff EMU if DCS symptoms resolved during REPRESS. √MCC via PMC

IV		☐☐☐	1. When $\Delta P < 0.5$, open hatch
	MD(flr)	☐☐☐	2. As reqd, remove diffuser cap at middeck floor, stow
		☐☐☐	3. As reqd, unstow airlock vent duct, connect end to middeck floor fitting
	A/L	☐☐☐	4. Configure appropriate vent ducts for airflow into airlock
		☐☐☐	5. As reqd, perform BOOSTER FAN INSTALLATION/ACTIVATION (AIRLOCK CONFIG)
EV		☐☐☐	6. √Gloves clean

* If reqd, IV use damp towel to clean gloves *

BOTH	DCM	☐☐☐	7. O2 ACT – OFF
		☐☐☐	8. PURGE vlv – op (up)
IV	DCM	☐☐☐	9. Install WATER sw guards (two)
		If EMU TV:	
		☐☐☐	10. EMU TV power pb – press; √Green LED not illuminated
		If REBA battery:	
		☐☐☐	11. √Glove heaters sw (one per glove) – OFF
	PLSS	☐☐☐	12. REBA sw – OFF (toward left arm of suit)
		☐☐☐	13. Disconnect lower arm pwr harness from gloves
		☐☐☐	14. Stow lower arm and glove pwr harness connectors under TMG
		If EMU TV:	
	PLSS	☐☐☐	15. Demate EMU TV power cable, mate to ground plug
	DCM	☐☐☐	16. √STATUS: SUIT P < 0.4 (compare w/gauge); disconnect gloves, stow in EMU Equipment Bag
		☐☐☐	17. Disconnect helmet, stow
	AW82B	☐☐☐	18. AIRLK DEPRESS vlv – install cap

SAFER DOFFING (10 min) (If reqd)

IV		☐☐☐	19. Remove SAFER latch guard from SAFER latch (leave lanyard strap attached to thruster tower)
		☐☐☐	20. Latch – ENG
		☐☐☐	21. Rotate latch ccw until release (~90 deg)
		☐☐☐	22. Demate PLSS from thruster towers
		☐☐☐	23. Fold thruster towers
		☐☐☐	24. Transfer to middeck
	PM	☐☐☐	25. Install inhibitor (not reqd if SAFER has been used)
		☐☐☐	26. Temp stow SAFER
		☐☐☐	27. Repeat for SAFER 2

Cont next page

	PLSS	☐☐☐	28. If reqd, unstow REBA jumper cable
		☐☐☐	29. AAP release handles to 90°
BOTH		☐☐☐	30. Engage HUT in AAP (IV assist as reqd)
		☐☐☐	31. AAP release handles to lock
	DCM	☐☐☐	32. FAN – OFF (fwd)
		☐☐☐	33. COMM mode – OFF
		☐☐☐	34. Doff comm cap
		☐☐☐	35. Disconnect waist ring, LCVG, biomed
		☐☐☐	36. √Wrist disconnects – op
		☐☐☐	37. Doff EV glasses
		☐☐☐	38. Doff HUT
		☐☐☐	39. Doff LTA, secure to handrail
		☐☐☐	40. Remove dosimeter from LCVG; insert in inflight garment
		☐☐☐	41. Doff: Biomed (disc OBS/EVA cable, stow in EMU Servicing Kit) LCVG (secure to HUT) TCU (allow to dry, as reqd) MAG, stow in wet trash
	HUT	☐☐☐	42. Install Multiple Water Connector cover
IV		☐☐☐	43. Perform EVA COMM DECONFIG (<u>EVA PREP</u>)
	R1	☐☐☐	44. O2 TK3 HTR A(B) – as reqd
	ML86B:C	☐☐☐	45. cb MNC EXT ARLK HTR LINE ZN 1,2 (two) – cl

<u>EMU WATER RECHARGE</u> (5 min) (If reqd)

	R11L	☐☐☐	46. SPLY H2O TKA OUTLET – CL (tb-CL) SM 60 TABLE MAINT
	CRT	☐☐☐	47. Use TKB quantity: PARAM ID – ITEM 1 +<u>0</u> <u>6</u> <u>2</u> <u>0</u> <u>4</u> <u>2</u> <u>0</u> EXEC
		☐☐☐	48. Log value before recharge

Recharge #	H2O TKB %
1	
2	
3	
4	
5	

	AW82D	☐☐☐	49. √EMU 1,2 H2O WASTE tb (two) – CL SPLY (two) – OP (tb-OP)
	CRT	☐☐☐	50. √H2O TKB quantity decreasing

<u>SAFER STOW</u> (10 min) (If reqd)

	PM	☐☐☐	51. √Inhibitor installed
		☐☐☐	52. Latch – PRELOAD
		☐☐☐	53. Rotate latch cw until lock markings on latch and tower recess aligned
		☐☐☐	54. Push in latch, latch – LCK
		☐☐☐	55. Install latch guards over latches under TMG, and reattach TMG
		☐☐☐	56. Fold thruster towers
		☐☐☐	57. Unstow stowage straps from EMU Equipment Bag; install
	PM	☐☐☐	58. MAN ISOL vlv – CL (up)
		☐☐☐	59. Stow SAFER in Stowage Bag
		☐☐☐	60. Repeat for SAFER 2

Cont next page

SUIT DRYING/SEAL WIPE

☐☐☐ 61. Wipe with drying towel:
LTA, legs, boots
HUT, suit arms
Gloves

☐☐☐ 62. Inspect Gloves for damage
Report damage to MCC

> WARNING
> Avoid stericide contact with eyes. Wash hands thoroughly after application

☐☐☐ 63. Wipe LTA crotch and HUT armpit areas with stericide (in EMU Servicing Kit)

☐☐☐ 64. Lightly wipe seals on LTA waist ring, arm wrist rings, HUT neck ring with lint-free wipe (in EMU Servicing Kit)

☐☐☐ 65. Clean, refurbish biomed

☐☐☐ 66. Remove drink bag from HUT and dispose in wet trash

☐☐☐ 67. √Drink Bag Restraint Bag installed in HUT

OXYGEN RECHARGE VERIFICATION

DCM ☐☐☐ 68. √STATUS: O2 P ~850 (recharge complete)

WATER FILL VERIFICATION (10 min) (If reqd)

DCM ☐☐☐ 69. √STATUS: H2O WP 8-15 psi and stable for ~30 sec (indicates charging complete)

SM 60 TABLE MAINT

CRT ☐☐☐ 70. Use TKB quantity:
PARAM ID – ITEM 1 +0 6 2 0 4 2 0 EXEC

R11L ☐☐☐ 71. Log value after recharge

Recharge #	H2O TKB %
1	
2	
3	
4	
5	

NOTE
Full charge = ~6%/EMU

R11L ☐☐☐ 72. SPLY H2O TKA OUTLET – OP (tb-OP)

WCS ☐☐☐ 73. √FAN SEP same as HOSE BLOCK

☐☐☐ 74. MODE – COMMODE/MANUAL/EMU, posn guard over sw (√airflow, WCS ON lt on)

AW82D ☐☐☐ 75. EMU 1,2 H2O SPLY (two) – CL (tb-CL)

☐☐☐ 76. Install SCOFs, lock

DCM ☐☐☐ 77. O2 ACT – IV

AW82H ☐☐☐ 78. EMU 1,2 H2O WASTE reg (two) – MAN OP

NOTE
Step 79 will be performed serially for EMU 1 and EMU 2

AW82D ☐☐☐ 79. EMU 1(2) H2O WASTE (one) – OP (tb-OP) (1 min), then
– CL (tb-CL)
– Repeat for other EMU

AW82H ☐☐☐ 80. EMU 1,2 H2O WASTE reg (two) – REGULATING

DCM ☐☐☐ 81. O2 ACT – OFF

☐☐☐ 82. Remove SCOFs, stow

WCS ☐☐☐ 83. MODE – AUTO (√WCS ON lt off)

EMU POWERDOWN/OVERNIGHT STOW

☐☐☐ 84. Stow comm cap in right arm of EMU
☐☐☐ 85. Install helmets and covers
AW18D ☐☐☐ 86. AIRLK AUD PWR – OFF
AW18H ☐☐☐ 87. PWR/BATT CHGR EMU 1,2 BUS SEL (two) – OFF
PWR/BATT CHGR EMU 1,2 MODE (two) – OFF
AW82D ☐☐☐ 88. √EMU 1,2 H2O WASTE,SPLY tb (four) – CL
AW82B ☐☐☐ 89. EV-1,EV-2 O2 vlv (two) – CL

If not performing in-suit EMU battery recharge:

BOTH DCM ☐☐☐ 90. Remove SCU; install DCM cover
☐☐☐ 91. Stow SCU on AAP, Velcro to wall
☐☐☐ 92. Tether LTA to airlock handrail
☐☐☐ 93. Hang LCVGs, TCUs, and other EMU accessories for drying

If last EVA completed:

X: SM 60 SM TABLE MAINT

☐☐☐ 94. Contact MCC for uplink of SM ALERT TMBU (if desired)
Changes enclosed in ☐

Param Name	Param ID	Lower Limit	Upper Limit
EXT A/L H2O LINE T 1			
EXT A/L H2O SPLY ZN 1 T	0640181	43	145
EXT A/L LCG 2 SPLY ZN 1 T	0640182	49	145
EXT A/L H2O LINE T 2			
EXT A/L H2O SPLY ZN 2 T	0640184	48	145
EXT A/L LCG 2 SPLY ZN 2 T	0640185	45	145
EXT A/L O2 LN T			
EXT A/L O2 SPLY ZN 2 T	0640186	OSL	OSH

This Page Intentionally Blank

EMU MAINT/RECHARGE

WATER RECHARGE 10-2
EMU POWERUP 10-2
WATER FILL 10-2
WATER FILL VERIFICATION 10-2
EMU LiOH CHANGEOUT 10-4
MIDDECK EMU BATTERY RECHARGE (STAND-ALONE) 10-4a
MIDDECK EMU BATTERY RECHARGE/LiOH REPLACEMENT 10-5
INITIATE 10-5
TERMINATE 10-6
IN-SUIT EMU BATTERY RECHARGE/CHARGE VERIFICATION 10-7
INITIATE 10-7
TERMINATE 10-7
EMU POWERDOWN 10-7
HELMET LIGHT/PGT BATTERY RECHARGE 10-8
INITIATE 10-8
TERMINATE 10-9
REBA BATTERY INSTALLATION 10-9
EMU BATTERY REMOVAL/INSTALL 10-10
HELMET LIGHT BULB CHANGEOUT 10-11
REBA BATTERY RECHARGE 10-12
INITIATE 10-12
TERMINATE 10-13

WATER RECHARGE

IF EMU NOT ALREADY POWERED UP:

EMU POWERUP

BOTH DCM
1. Retrieve, position SCUs; remove DCM covers
2. Connect SCUs to DCM, √locked
3. PWR – BATT

> CAUTION
> EMU must be on BATT pwr when airlock pwr supply is turned on

AW18H 4. PWR/BATT CHGR EMU 1,2 MODE (two) – PWR
BUS SEL (two) – MNA(MNB)

MD(flr) 5. √EMU O2 ISOL VLV – OP

AW82B 6. EV1,2 O2 vlv (two) – OP

DCM 7. PWR – SCU

WATER FILL

MO13Q 8. √ARLK H2O S/O VLV – OPEN (tb-OP)

R11L 9. √SPLY H2O TKA OUTLET – CL (tb-CL)

SM 60 TABLE MAINT

CRT 10. Use TKB quantity:
PARAM ID – ITEM 1 +0 6 2 0 4 2 0 EXEC

11. Log value before recharge

Recharge #	H2O TKB %
1	
2	
3	
4	
5	

AW82D 12. √EMU 1,2 H2O WASTE tb (two) – CL
SPLY (two) – OP (tb-OP)

13. √H2O TKB quantity decreasing

> NOTE
> Full charge requires ~15 min

WATER FILL VERIFICATION

DCM 14. √STATUS: H2O WP 8-15 psi and stable for ~30 sec (indicates charging complete)

SM 60 TABLE MAINT

CRT 15. Use TKB quantity:
PARAM ID – ITEM 1 +0 6 2 0 4 2 0 EXEC

16. Log value after recharge

Recharge #	H2O TKB %
1	
2	
3	
4	
5	

Cont next page

NOTE

Full charge = ~6%/EMU

R11L	17.	SPLY H2O TKA OUTLET – OP (tb-OP)
WCS	18.	√FAN SEP same as HOSE BLOCK
	19.	MODE – COMMODE/MANUAL/EMU, posn guard over sw (√airflow, WCS ON lt on)
AW82D	20.	EMU 1,2 H2O SPLY (two) – CL (tb-CL)
	21.	Install SCOFs, lock
DCM	22.	O2 ACT – IV
AW82H	23.	EMU 1,2 H2O WASTE reg (two) – MAN OP

NOTE

Step 24 will be performed serially for EMU 1 and EMU 2

AW82D	24.	EMU 1(2) H2O WASTE (one) – OP (tb-OP) (1 min), then – CL (tb-CL) – Repeat for other EMU
AW82H	25.	EMU 1,2 H2O WASTE reg (two) – REGULATING
DCM	26.	O2 ACT – OFF
	27.	Remove SCOFs, stow
WCS	28.	MODE – AUTO (√WCS ON lt off)
	29.	If EMU powerup performed, go to EMU POWERDOWN

EMU LiOH CHANGEOUT (20 min)

1. Transfer new cartridges to airlock
2. Transfer new batteries, as reqd, to airlock
3. Release EMU from AAP, posn as reqd
4. Unzip thermal cover, Velcro to top of EMU
5. Record used LiOH serial numbers

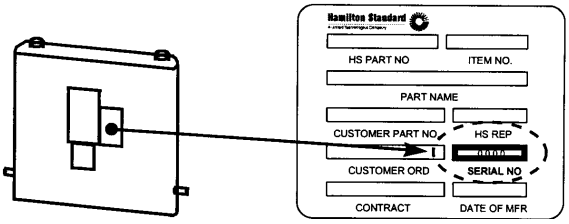

EVA #	EV1	EV2
1		
2		
3		
4		
5		

6. Remove, mark used LiOH cartridge

IF EMU BATTERY TO BE REPLACED:

AW18H 7. PWR/BATT CHGR EMU 1,2 BUS SEL (two) – OFF

DCM 8. √PWR – SCU

> CAUTION
> Do not allow battery to impact airlock wall and use care when handling/stowing battery to avoid damaging aluminum cover

9. Remove used battery
10. Install new battery (√connector alignment), latch

> CAUTION
> If 10.2 cabin used, possible ΔP across LiOH cartridge caps. Direct ports away from face
>
> Limit exposure time of uncapped canister ports and avoid contact with seals

11. Holding new LiOH cartridge with aluminum plate serial number facing self, remove caps (left first), √O-ring seals for damage, install LiOH (attach Velcro retainer strap)
12. Close thermal cover zipper
13. Reinstall EMU in AAP
14. Place caps on used LiOH cartridge
15. Stow used batteries, LiOH in middeck lockers

INITIATE (20 min)

1. Unstow middeck battery charger

ML85E (MUP)

2. √DC UTIL PWR – OFF on specified utility outlet
3. Affix batteries to charger using Velcro straps on charger
4. Connect charger cables to batteries
5. Stow batteries/charger for charge
6. Connect charger power cable to specified MUP utility outlet
7. √CB closed for specified utility outlet
8. DC UTIL PWR – ON

Charger

9. √ON LEDs (red) – ON
   √READY LEDs (green) – ON (for 10 sec at startup)
   √READY LEDs (green) – blinking

NOTE

EMU batteries may experience a false charge completion due to passivation within the battery. The passivation is removed with repeated attempts (two to three times) at charging the battery

After 15 min charging, verify charging is continuing:

Charger

10. √ON LEDs (red) – ON
    √READY LEDs (green) – blinking

* If ON LED (red) is OFF and READY LED (green) is ON *
* (non-blinking): *
* 1. DC UTIL PWR – OFF (3 sec) *
* 2. DC UTIL PWR – ON *
* 3. √ON LEDs (red) – ON *
* √READY LEDs (green) – ON 10 sec at startup *
* √READY LEDs (green) – blinking *
* 4. Report anomaly to MCC *

NOTE

The absence of any active LEDs represents an over-current or overvoltage condition that has caused the charger to shut down, or the charger has not been properly powered from the DC Utility Outlet. All protective conditions are resettable by taking the DC UTILITY POWER to OFF.

During the charge, the red ON LED will be illuminated and the green READY LED will continue to blink, giving positive indication that the charger is still charging

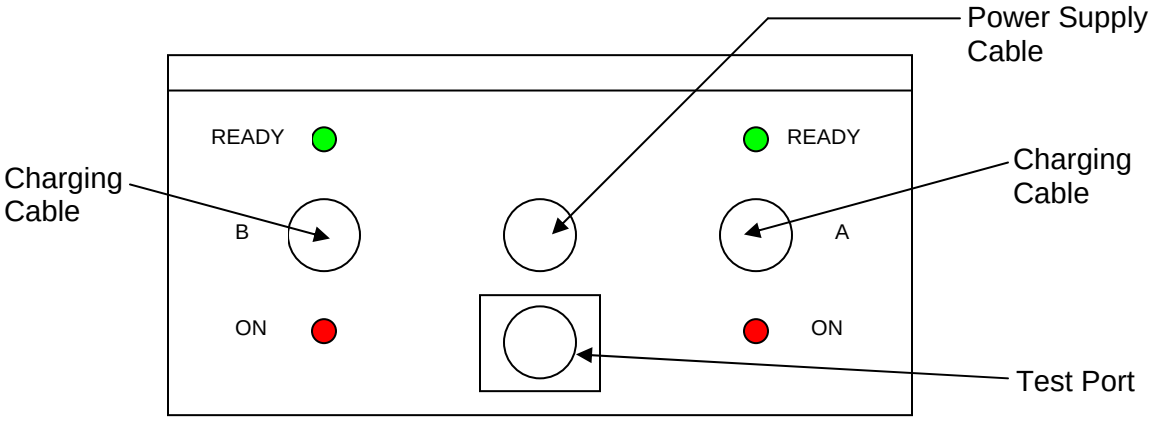

TERMINATE (10 min)

NOTE

When a nominal charge is complete, the red ON LED will extinguish and the green READY LED will illuminate without blinking. The red ON LED will be illuminated only when the positive current flow into the battery is greater than 0.6A

11. When charge complete:

Charger √ON LEDs (red) – OFF
√READY LEDs (green) – ON

ML85E (MUP) DC UTIL PWR – OFF
Disconnect cables from batteries

12. Disconnect charger power cable from utility outlet
13. Stow charger and batteries

MIDDECK EMU BATTERY RECHARGE/LiOH REPLACEMENT

INITIATE (30 min)

NOTE
Refer to REF DATA for specific plug-in location

1. Unstow new LiOH cartridges
2. Unzip thermal cover, Velcro to top of EMU
3. Record used LiOH serial numbers

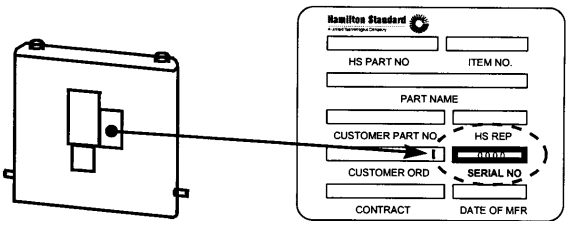

EVA #	EV1	EV2
1		
2		
3		
4		
5		

4. Remove, mark, stow used LiOH cartridge

DCM 5. √PWR – SCU

> CAUTION
> Do not allow battery to impact airlock wall and use care when handling/stowing battery to avoid damaging aluminum cover

6. Remove, stow used battery

> CAUTION
> If 10.2 cabin used, possible ΔP across LiOH cartridge caps. Direct ports away from face
>
> Limit exposure time of uncapped canister ports and avoid contact with seals

7. Holding new LiOH cartridge with aluminum plate serial number facing self, remove caps (left first), √O-ring seals for damage, install LiOH (attach Velcro retainer strap)
8. Close thermal cover zipper, stow EMU in middeck
9. Unstow middeck battery charger

_____ 10. √DC UTIL PWR – OFF

11. Configure battery(s), charger, and straps for charge
12. Connect charger cable(s) to battery(s)
13. Stow battery(s)/charger for charge
14. Connect power cable to utility outlet

_____ 15. DC UTIL PWR – ON

Charger 16. √ON LEDs (red) – ON
√READY LEDs (green) – ON (for 10 sec at startup)
√READY LEDs (green) – blinking

NOTE
EMU batteries may experience a false charge completion due to passivation within the battery. The passivation is removed with repeated attempts (two to three times) at charging the battery

After 15 min charging, verify charging is continuing:

Charger 17. √ON LEDs (red) – ON
√READY LEDs (green) – blinking

```
*  If ON LED (red) is OFF and READY LED (green) is ON  *
*    (non-blinking):                                    *
*                    18.  DC UTIL PWR – OFF (3 sec)     *
*                    19.  DC UTIL PWR – ON              *
*          Charger   20. √ON LEDs (red) – ON            *
*                        √READY LEDs (green) – ON 10 sec*
*                          at startup                   *
*                        √READY LEDs (green) – blinking *
*                    21.  Report anomaly to MCC         *
```

NOTE

The absence of any active LEDs represents an over-current or overvoltage condition that has caused the charger to shut down, or the charger has not been properly powered from the DC Utility Outlet. All protective conditions are resettable by taking the DC UTILITY POWER to OFF.

During the charge, the red ON LED will be illuminated and the green READY LED will continue to blink, giving positive indication that the charger is still charging

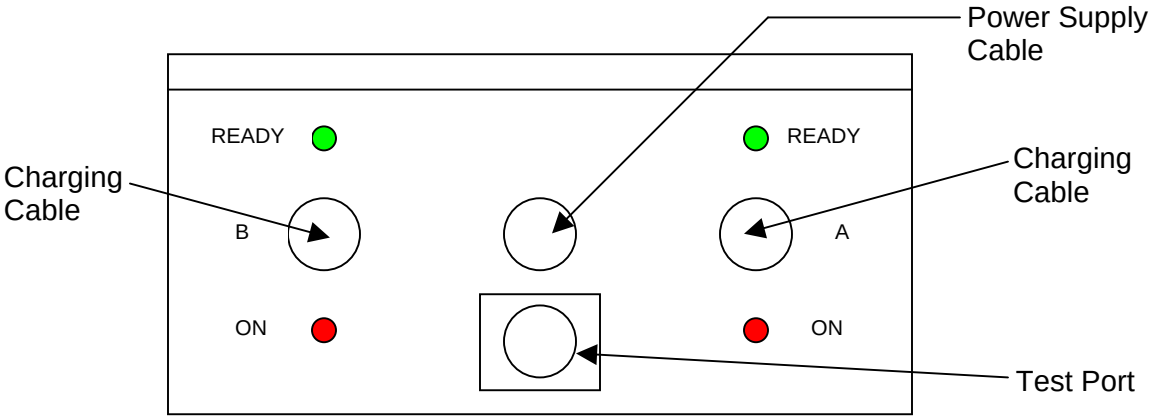

TERMINATE (15 min)

NOTE

When a nominal charge is complete, the red ON LED will extinguish and the green READY LED will illuminate without blinking. The red ON LED will be illuminated only when the positive current flow into the battery is greater than 0.6A

22. When charge complete:

Charger
√ON LEDs (red) – OFF
√READY LEDs (green) – ON
DC UTIL PWR – OFF
Disconnect cable(s) from battery(s)

23. Unzip thermal cover, Velcro to top of EMU
24. Remove LiOH cartridge
25. Open battery latch
26. Install charged battery (√connector alignment); latch
27. Reinstall LiOH (attach Velcro retainer strap)
28. Close thermal cover zipper

IN-SUIT EMU BATTERY RECHARGE/CHARGE VERIFICATION

INITIATE

1. Retrieve, position SCUs; remove DCM covers

2. Connect SCUs to DCM, √locked

AW18H 3. PWR/BATT CHGR EMU 1,2 BUS SEL (two) – OFF
MODE (two) – CHARGE
BUS SEL (two) – MNA(MNB)

4. Continue charge as reqd:
Verification: 15 min, minimum
Full Charge: Up to 20 hr

TERMINATE

AW18H 5. √PWR/BATT CHGR EMU INPUT AMPS < 1 for both EMUs

6. PWR/BATT CHGR EMU 1,2 BUS SEL (two) – OFF
MODE (two) – OFF

7. Remove SCU, install DCM cover

8. Stow SCU on AAP, Velcro to wall

EMU POWERDOWN

AW18H 1. PWR/BATT CHGR EMU 1,2 BUS SEL (two) – OFF
MODE (two) – OFF

AW82D 2. √EMU 1,2 H2O WASTE,SPLY tb (four) – CL

3. Remove SCU, install DCM cover

4. Stow SCU on AAP, Velcro to wall

HELMET LIGHT/PGT BATTERY RECHARGE

INITIATE (10 min)

NOTE

Refer to REF DATA for specific plug-in location

1. Unstow, as reqd: EHIP Light Battery Charger
   EHIP DC PWR/REBA DC EXT Y-Cable
   EHIP-PGT Adapter cable (charger to battery) (2)
   PGT Batteries (2)
   Helmet Light Batteries (4)

_____ 2. √DC UTIL PWR – OFF

3. Plug EHIP DC PWR/REBA DC EXT Y-Cable into charger, then into orbiter pwr supply

_____ 4. DC UTIL PWR – ON

√Blue LEDs illuminated

IFM Pin Kit

```
* If blue LEDs not illuminated:                  *
*    √DC UTIL PWR – ON                            *
* If blue LEDs still not illuminated:             *
*      DC UTIL PWR – OFF                          *
*      Unplug EHIP DC PWR/REBA DC EXT Y-Cable     *
*        from charger                             *
*      Change fuse (7.5A)                         *
*      Plug EHIP DC PWR/REBA DC EXT Y-Cable       *
*        into charger                             *
*      DC UTIL PWR – ON                           *
```

If charging helmet light batteries:

5. Install batteries (four) into charger

If charging PGT batteries, for EACH battery:

6. Release captive screw on PGT battery door using screwdriver
7. Pry open PGT battery door, rotate away from cavity
8. Remove cap from EHIP PGT Adapter cable into charger
9. Remove battery jumper, temp stow on EHIP-PGT Adapter cable cap
   Plug EHIP-PGT Adapter cable into battery
10. Install EHIP-PGT Adapter cable into charger
11. √Yellow LED illuminated; start timer (MET ____/____:____:____); temp stow charger

* If yellow LED not illuminated, see chart below *

Indicator	Problem	Solution
Green and red LED illuminated	Cold batt (≤ 50 degF)	Leave batt installed in charger (batt will warm up and automatically change LED to yellow)
Red LED illuminated	Hot batt (≥ 113 degF)	DC UTIL PWR – OFF Remove batt or EHIP-PGT adapter if PGT batt DC UTIL PWR – ON

12. Wait 15 min and check LEDs

If yellow LEDs illuminated:

13. Continue charging

If green LED(s) illuminated:

14. DC UTIL PWR – OFF
15. Remove battery or EHIP-PGT Adapter cable from affected station(s)
16. DC UTIL PWR – ON
17. Wait for blue LED(s) to illuminate
18. Re-install battery or EHIP-PGT Adapter cable
19. √Yellow LED(s) illuminated
20. Continue charging

Cont next page

TERMINATE (10 min)

NOTE
Refer to REF DATA for specific plug-in location

1. √Green LED illuminated

WARNING
Ensure charger is unpowered before disconnecting batteries

CAUTION
Do not leave batteries installed after unpowering charger to prevent possible charger damage and battery discharge

2. DC UTIL PWR – OFF

If helmet light batteries charged:
3. Remove batteries from charger
4. Install batteries in lights
5. √EMU light ops

CAUTION
Do not stow EMU lights in locker with batteries installed

If PGT batteries charged, for each battery:
6. Remove EHIP-PGT Adapter cable from charger
7. Unplug battery from EHIP-PGT Adapter cable; reinstall cap on cable

NOTE
PGT battery will not function if jumper is not installed

8. Re-install battery jumper
9. Rotate battery door into place, tighten screw using screwdriver
10. Mark batteries “charged”, stow in locker
11. Stow as reqd:
    EHIP Light Battery Charger(s)
    EHIP DC PWR/REBA DC EXT Y-Cable
    EHIP-PGT Adapter cables (2)
    PGT Batteries (2)

REBA BATTERY INSTALLATION

1. Unstow REBA from locker or charger
2. Remove EMU from AAP, unzip TMG to access REBA pouch and EMU power harness
3. √Glove heater sw (two) – OFF
4. Remove REBA J1 fabric cover
5. Install REBA on EMU
6. Route REBA sw pull tabs thru TMG loops
7. √REBA sw (one per EMU) – OFF (toward left arm of suit)
8. Connect EMU power harness (P1) to REBA (J1); verify locked by gently pulling on EMU power harness cable
9. Zip TMG closed, install EMU on AAP

EMU BATTERY REMOVAL/INSTALL (5 min)

> CAUTION
> Do not allow battery to impact airlock wall and use care when handling/stowing battery to avoid damaging aluminum cover

> WARNING
> EMU pwr switch must be in SCU position with airlock pwr OFF during battery changeout

DCM
1. √PWR – SCU

If SCU connected to DCM:

AW18H
2. √PWR/BATT CHGR EMU 1,2 BUS SEL (two) – OFF

PLSS
3. Release EMU from AAP as reqd
4. Unzip thermal cover, Velcro to top of EMU
5. Open LiOH(Metox) latches
6. Rotate LiOH(Metox) canister outward until softstop or remove canister
7. Open battery latches
8. Remove/install EMU battery as reqd (√connector alignment)
9. Close battery latches
10. Reinstall LiOH(Metox), latch
11. Close thermal cover
12. Reinstall EMU in AAP as reqd
13. Stow or charge batteries as reqd

HELMET LIGHT BULB CHANGEOUT (15 min)

NOTE

Light assembly has several loose pieces which may be spring loaded. Be prepared to capture them during changeout

CAUTION

Handle bulbs with care. Do not touch bulbs with bare hands (could degrade bulb life span)

1. Remove battery from affected side of lights
2. If EMU TV installed, remove camera from affected side of lights
3. Obtain, don comfort glove
4. Depress faceplate; open faceplate sliders (two) on affected side of lights
5. Remove faceplate
6. Remove reflector housing by pulling straight out
7. Remove affected bulbs as reqd, replace
8. Mark, stow used bulbs

NOTE

Contacts on spot bulb may be difficult to reseat fully into socket

9. Install reflector housing and flood bulb reflector, seat spot bulb
10. Install faceplate, lock sliders (two)
11. Install battery; √EMU light ops
12. If EMU TV installed, attach camera back to affected side of lights
13. Remove, stow comfort glove

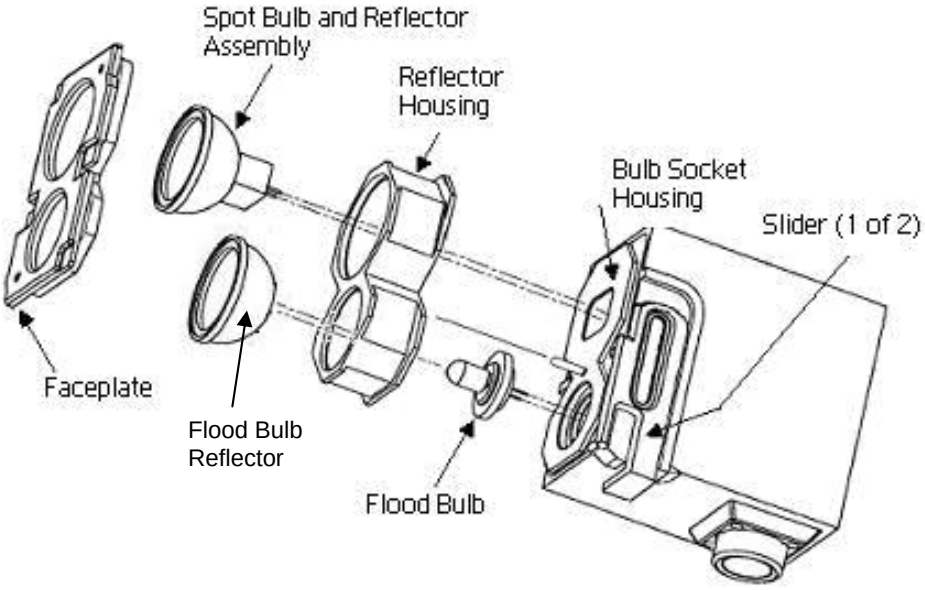

REBA BATTERY RECHARGE

INITIATE (10 min)

NOTE

Refer to REF DATA for specific plug-in plan location

1. Unstow: REBA Charger
   EHIP DC PWR/REBA DC EXT Y-Cable
   25' REBA/EHIP Ext Pwr cable (if reqd)

_____ 2. √DC UTIL PWR – OFF

If in-suit recharge:

3. Plug EHIP DC PWR/REBA DC EXT Y-Cable into charger, 25' REBA/EHIP Ext Pwr cable into EHIP DC PWR/REBA DC EXT Y-Cable, 25' REBA/EHIP Ext Pwr cable into orbiter power supply

Else:

4. Plug EHIP DC PWR/REBA DC EXT Y-Cable into charger and orbiter power supply

_____ 5. DC UTIL PWR – ON

√Blue LEDs (two) illuminated

```
* If blue LED not illuminated:                                  *
*    √DC UTIL PWR – ON                                          *
*    √cb – cl                                                   *
*    √Cable connections mated                                   *
* If blue LED still not illuminated:                            *
*      DC UTIL PWR – OFF                                        *
*      Unplug EHIP DC PWR/REBA DC EXT Y-Cable from charger      *
*      Change fuse (4.0 Amps)                                   *
*      Plug EHIP DC PWR/REBA DC EXT Y-Cable into charger        *
*      DC UTIL PWR – ON                                         *
```

REBA Charger

REBA 6. √REBA sw (two) – OFF

7. Demate REBA jumper cables (two)

8. Mate charger cables (two) to REBA jumper cables

REBA Charger 9. √Yellow LEDs (two) illuminated; temp stow charger on wall

* If yellow LED not illuminated, see chart below *

Indicator	Problem	Solution
Green and red LED illuminated	Cold batt (≤ 50 degF)	Leave REBA connected to charger (REBA will warm up and automatically change LED to yellow)
Red LED illuminated	Hot batt (≥ 113 degF)	DC UTIL PWR – OFF Disconnect REBA from charger. Allow REBA to cool DC UTIL PWR – ON Mate charger cable to REBA jumper cable

When 15 min of charge complete:

10. √READY LEDs (green) – Off

```
* If READY LED (green) – On:                                    *
*      DC UTIL PWR – OFF                                        *
*      Disconnect REBA from charger                             *
*      DC UTIL PWR – ON                                         *
*                                                               *
* When NO BATTERY LED (blue) – On:                              *
*      Mate charger cable to REBA jumper cable                  *
*    √CHARGING LED (yellow) – On                                *
```

TERMINATE (10 min)

NOTE
Refer to REF DATA for specific plug-in plan location

1. √Green LED illuminated

WARNING
Ensure charger is unpowered before disconnecting batteries

CAUTION
Do not leave batteries installed after unpowering charger to prevent possible charger damage and battery discharge

_____ 2. DC UTIL PWR – OFF
3. Disconnect REBA from charger
4. Mate REBA jumper cables
5. Stow: REBA Charger
EHIP DC PWR/REBA DC EXT Y-Cable
25' REBA/EHIP Ext Pwr cable (if reqd)

This Page Intentionally Blank

POST EVA ENTRY PREP

POST EVA ENTRY PREP (45 min if SAFER not flown)
(55 min if SAFER flown)

AW18D 1. AIRLK AUD PWR – OFF
AW18H 2. PWR/BATT CHGR EMU 1,2 BUS SEL (two) – OFF
MODE (two) – OFF
MD(flr) 3. EMU O2 ISOL VLV – CL
AW82B 4. EV-1,EV-2 O2 vlv (two) – CL
AW82D 5. √EMU 1,2 H2O WASTE,SPLY tb (four) – CL
6. Stow in FDF locker: DEPRESS/REPRESS (Cue Card)
Cuff C/L (two)
7. Disconnect comm caps (two) from elec harness, temp stow
8. Remove LTA, √Multiple Water Connector cover installed
9. Stow LCVG and EV Crew Options Kit (ECOK) in HUT
10. Connect LTA to HUT
11. Install gloves
12. √Any wrist tethers attached to glove tether loop with only one hook (other hook on D-ring or first hook) and cinched down around wrist

If REBA:
13. Remove REBA batteries from all EMUs, stow

CAUTION
EMU TV and helmet lights must be removed prior to landing

If EMU TV:
14. Remove EMU TVs from helmet lights, stow
15. Transfer EMU lights to middeck
16. Install helmets and covers, lock
17. Remove SCU, install DCM cover
DCM 18. Stow SCU on AAP, rebuckle straps
19. √PURGE vlvs – op (up)
20. Perform LTA RESTRAINT STRAP INSTALLATION (AIRLOCK CONFIG) as reqd for landing configuration
21. Attach LTA Restraint Bags over LTA, suit arms; tighten straps
22. Stow comm caps in LTA Restraint Bag pouch
23. Install and loosely secure airlock floor pallet using 1/4-in drive ratchet, 4-in ext w/1/4-in drive, and 1/2-in socket w/1/4-in drive. Torque to 200 in-lb using torque wrench

SAFER ENTRY STOW (10 min) (if reqd)
24. Deploy HCM
25. Install pwr sw guard
26. Stow HCM in foam outside of SAFER
27. Stow SAFER in stowage bag

28. Install additional EMU(s)/Airlock Stowage Bag(s) in airlock; √bag, strap installed
29. Install 20-g Crash Bag on middeck EMUs (if flown)
30. Remove batteries from lights, stow in lockers

CAUTION
To prevent possible equipment damage, do not stow EMU lights in locker with batts installed

Vol H 31. Stow EMU lights, EMU Equipment Bag, EVA Bag in middeck

Inner Hatch 32. Equal vlv (two) – NORM, install caps

* If outer hatch leaking or integrity suspect: *
* Equal vlv (two) – OFF, install caps *

33. Inform MCC, Post EVA Entry Prep complete

POST ISS EVA ENTRY PREP (45 min if SAFER not flown)
(55 min if SAFER flown)

MD(flr) 1. EMU O2 ISOL VLV – CL
AW18D 2. AIRLK AUD PWR – OFF
AW18H 3. √PWR/BATT CHGR EMU 1,2 BUS SEL (two) – OFF
MODE (two) – OFF
AW82B 4. √EV-1,EV-2 O2 vlv (two) – CL
AW82D 5. √EMU 1,2 H2O WASTE,SPLY tb (four) – CL
6. √No helmet lights or EMU TV installed on helmets
7. Remove helmets, temp stow
8. Disconnect comm caps from EMU electrical harness, temp stow
9. Remove LTA, √Multiple Water Connector cover installed
10. √Only LCVG and EV Crew Options Kit (ECOK) in HUT
11. Connect LTA to HUT
12. √Gloves installed, locked
13. √Any wrist tethers attached to glove tether loop with only one hook (other hook on D-ring or first hook) and cinched down around wrist
14. Install helmets, lock
15. Install helmet covers if not already installed
16. √SCU stowed on AAP, straps buckled
DCM 17. √PURGE vlvs – op (up)
Vol H 18. √No loose items temp stowed in Vol H (waist tethers, etc). Install as reqd
19. Attach LTA Restraint Bags over LTA, suit arms, tethers; tighten straps
20. Stow comm caps in LTA Restraint Bag pocket
If airlock floor pallet removed:
21. Install and loosely secure airlock floor pallet using 1/4–in drive ratchet, 4–in ext w/1/4–in drive, and 1/2–in socket w/1/4–in drive. Torque to 200 in–lb using torque wrench
22. Install floor Airlock Stowage Bag in airlock; √bag, strap installed
23. Install 20-g Crash Bag on middeck EMUs (if flown)

<u>SAFER ENTRY STOW</u> (10 min) (If SAFER returning)
24. Deploy HCM
25. Install power switch guard ('PWR' over PWR switch)
26. Stow HCM in foam outside of SAFER
27. Stow SAFER in stowage bag

Inner Hatch 28. Equal vlv (two) – NORM, install caps

* If outer hatch leaking or integrity suspect: *
* Equal vlv (two) – OFF, install caps *

29. Inform MCC, Post ISS EVA Entry Prep complete
30. Stow in FDF/ODF locker (if reqd):
FDF EVA Checklist
Used EVA Prebreathe Cue Card
ISS EVA Systems Checklist

This Page Intentionally Blank

OFF-NOMINAL PROCEDURES

This Page Intentionally Blank

EMU CONTINGENCY PROCS

DISPLAY LOSS DURING POWER TRANSFER (WARM RESTART) 12-2
VACUUM H2O RECHARGE (MANNED) 12-2
LiOH REPLACEMENT (MANNED) 12-3
BATTERY REPLACEMENT (MANNED) 12-4
WATER DUMP 12-6
SCU SWAP (UNMANNED) 12-7
(MANNED) 12-7
EMU COLD RESTART (MANNED) 12-7
12.1 STS EVA DECONTAMINATION 12-8
CONTAMINATION TEST 12-15
SAFER BATTERY CHANGEOUT 12-18
BENDS TREATMENT ADAPTER (BTA) INSTALLATION (IN-SUIT) 12-19
BTA PREP 12-19
TREATMENT 12-19
BENDS TREATMENT ADAPTER (BTA) INSTALLATION (POST SUIT DOFFING) 12-21
BTA PREP 12-21
TREATMENT 12-21
EMU RESIZE 12-24

DISPLAY LOSS DURING POWER TRANSFER (WARM RESTART)

DCM If PWR – BATT and SCU connected:
AW18H 1. √PWR/BATT CHGR EMU 1(2) BUS SEL – OFF
DCM If PWR – SCU:
2. PWR – BATT
AW18H 3. PWR/BATT CHGR EMU 1(2) BUS SEL – OFF

> WARNING
> Fan will be off from steps 4 to 9 during which time CO2 buildup is a concern

> NOTE
> Affected EMU will be without comm after step 6. Steps 6 and 7 should be read together before step 6 is performed

DCM 4. FAN – OFF (expect FAN SW OFF msg, DISP – PRO)
IV 5. Inform affected EV crewmember of impending comm loss
DCM 6. PWR – SCU (7 sec)
7. PWR – BATT
When power restart complete:
8. √Display – O2 POS XX, expect FAN SW OFF msg, DISP – PRO
9. As reqd, FAN – ON
If display blank or locked up:
10. Contact MCC
If SCU power desired:
11. √SCU connected to DCM
AW18H 12. PWR/BATT CHGR EMU 1(2) MODE – PWR
BUS SEL – MNA(MNB)
13. √EMU INPUT 1(2) Volts = 18.0 – 20.0
DCM 14. PWR – SCU
DCM 15. √Display – O2 POS XX

VACUUM H2O RECHARGE (MANNED)

> WARNING
> Procedure should be used only if performing a contingency EVA

EV 1. Perform AIRLOCK INGRESS, Cuff C/L, 30 (Close hatch, partially engage latches)
2. √Helmet purge vlv – cl, locked
DCM 3. √PURGE vlv – cl (dn)
4. √WATER – OFF
IV MO13Q 5. √ARLK H2O S/O VLV – OPEN (tb-OP)
MD(flr) 6. √EMU O2 ISOL VLV – OP
ML86B:C 7. √cb MNC EXT ARLK HTR LINE ZN 1,2 (two) – op
AW82B 8. √EV-1(EV-2) O2 vlv – OP
EV AW18H 9. PWR/BATT CHGR EMU 1(2) BUS SEL – MNA(MNB)
DCM 10. PWR – SCU (fwd), WARN TONE
IV R11L If SPLY H2O XOVR VLV closed (tb-CL or bp) (water transfer config):
11. SPLY H2O TKA OUTLET – CL (tb-CL)
If SPLY H2O XOVR VLV open (tb-OP) (nominal config):
L1 12. √RAD CNTLR OUT TEMP – NORM
13. √FLASH EVAP CNTLR PRI A,B (two) – OFF
ML31C 14. SPLY H2O TKD OUTLET – CL (tb-CL)
R11L 15. SPLY H2O TKB OUTLET – CL (tb-CL)
√TKA OUTLET – CL (tb-CL)
TKC INLET – CL (tb-CL)
TKC OUTLET – OP (tb-OP)

EV AW82D 16. √EMU 1(2) H2O WASTE – CL (tb-CL)
SPLY – OP (tb-OP)

> WARNING
> O2 will be off. IV stand by inner hatch
> Equal vlvs for emergency repress

EV DCM 17. O2 ACT – OFF, monitor SUIT P (√SUIT P > 3.6)

* When SUIT P ≤ 3.6: *
* O2 ACT – PRESS until SUIT P = 4.2-4.4 *
* – OFF *

18. √STATUS: H2O WP ~8-15 psi and stable for ~30 sec (indicates charging complete), then:
O2 ACT – PRESS until SUIT P = 4.2-4.4
– EVA

IV R11L If SPLY H2O XOVR VLV closed (tb-CL or bp) (water transfer config):
19. SPLY H2O TKA OUTLET – OP (tb-OP)
If SPLY H2O XOVR VLV open (tb-OP) (nominal config):
20. SPLY H2O TKC INLET – OP (tb-OP)
TKB OUTLET – OP (tb-OP)
ML31C 21. SPLY H2O TKD OUTLET – OP (tb-OP)
22. If FES reqd, perform TOPPING FES STARTUP (ORB OPS, ECLS)

EV AW82D 23. EMU 1(2) H2O SPLY – CL (tb-CL)

> NOTE
> Disregard fault msgs until CWS updated with: O2 ACT – EVA, WATER – ON, and H2O TEMP < 60

24. Go to DEPRESS/REPRESS Cue Card, DEPRESS, step 11 (POST DEPRESS, step 1, if tunnel adapter)

LiOH REPLACEMENT (MANNED)

> CAUTION
> If 10.2 cabin used, possible ΔP across LiOH cartridge caps. Direct ports away from face
> Limit exposure time of uncapped canister ports and avoid contact with seals

IV 1. Unstow new LiOH cartridge with aluminum plate serial number facing self, remove caps (left first)
IV 2. Unzip EMU thermal cover, fold back, Velcro to top of EMU

> WARNING
> Fan will be off during changeout. Perform changeout as quickly as possible

> CAUTION
> Vent loop is pressurized. Restrain LiOH cartridge

DCM 3. √O2 ACT – IV
4. Helmet purge vlv – op
5. FAN – OFF
IV EMU 6. Remove used cartridge
7. Holding new LiOH cartridge with aluminum plate serial number facing self, √O-ring seals for damage, install LiOH (attach Velcro retainer strap)

NOTE

EMU may issue CO2 HIGH or MONITOR CO2 message

DCM 8. FAN – ON (PWR RESTART may occur)
9. Helmet purge vlv – cl, locked
DCM 10. O2 ACT – PRESS
11. PURGE vlv – op (up)
12. Begin timing 2-min purge
IV EMU 13. Close EMU thermal cover zipper
14. Place caps on used LiOH cartridge
IV 15. Mark used cartridge, stow in middeck

When purge time = 2 min:

DCM 16. √STATUS: CO2 < 8.0 mmHg, then PURGE vlv – cl (dn)
17. O2 ACT – IV

NOTE

A minimum of 40 min of prebreathe reqd to condition LiOH cartridge

18. Continue EVA PREP or EMU PREBREATHE with minimum of 40 min prebreathe

BATTERY REPLACEMENT (MANNED)

IV 1. Unstow new battery

CAUTION

Do not allow battery to impact airlock wall and use care when handling/stowing battery to avoid damaging aluminum cover

PLSS 2. Unzip EMU thermal cover, fold back, Velcro to top of EMU

WARNING

Power switch must be in SCU during battery changeout

Fan will be off during changeout. Perform changeout as quickly as possible

If no SCU power available:

DCM 3. √O2 ACT – IV
4. Helmet purge vlv – op
5. FAN – OFF

NOTE

EMU will be without comm after step 6 until battery power is restored at step 18

DCM 6. PWR – SCU

If degraded/dead battery:

DCM 7. √PWR – SCU
8. √O2 ACT – IV
9. Helmet purge vlv – op
DCM 10. FAN – OFF (fwd)
PLSS 11. Open battery latch
12. Open LiOH cartridge latches

WARNING

Vent loop is pressurized. Restrain LiOH canister during battery changeout to avoid injury and breaking seal

13. Rotate LiOH cartridge outward until limited by Velcro retainer strap
14. Remove used battery
15. Install new battery (√connector alignment); engage latch
16. √LiOH cartridge seated in vent ports, rotate downward until latch pins engage
17. Close LiOH cartridge latches

If no SCU power available:

DCM 18. PWR – BATT
19. FAN – ON (aft) (PWR RESTART may occur)
20. Helmet purge vlv – cl, locked

* If LiOH cartridge seal broken: *
*DCM 21. O2 ACT – PRESS *
* 22. PURGE vlv – op (up) *
* 23. Begin 2 min purge *
* When 2 min complete: *
*DCM 24. PURGE vlv – cl (dn) *
* 25. O2 ACT – IV *

DCM 26. √STATUS: BATT VDC
27. Report following to MCC as comm permits:
    Old battery barcode/serial number and stowage location
    New battery barcode/serial number and BATT VDC reading
28. Close EMU thermal cover zipper

NOTE

EMU-calculated TIME EV and TIME LF do not reset despite battery changeout. A cold restart is reqd to reset those parameters

29. If reqd per MCC, perform EMU COLD RESTART (EMU CONT PROCS)
30. Continue EVA PREP

WATER DUMP

BOTH 1. Connect SCUs to DCM, √locked

DCM 2. PWR – BATT

> CAUTION
> EMU must be on BATT pwr when airlock pwr supply turned on

AW18H 3. PWR/BATT CHGR EMU 1,2 MODE (two) – PWR
BUS SEL (two) – MNA(MNB)

DCM 4. PWR – SCU

WCS 5. √FAN SEP same as HOSE BLOCK

6. MODE – COMMODE/MANUAL/EMU; posn guard over sw (√airflow, WCS ON lt on)

AW82D 7. √EMU 1,2 H2O SPLY (two) – CL (tb-CL)

8. Remove helmets with sunshades down and helmet covers installed; stow

9. Install SCOFs, lock

DCM 10. O2 ACT – IV

AW82D 11. EMU 1,2 H2O WASTE reg (two) – MAN OP

NOTE
EMU will be dumped serially in step 12

12. EMU 1(2) H2O WASTE (one) – OP (tb-OP) (until H2O WP < 7 and stable for ~1 min)
– CL (tb-CL)
– Repeat for other EMU

AW82H 13. EMU 1,2 H2O WASTE reg (two) – REGULATING

DCM 14. O2 ACT – OFF

15. Remove SCOFs, stow

16. Install helmets with covers, lock

WCS 17. MODE – AUTO (√WCS ON lt off)

SCU SWAP (UNMANNED)

BOTH	DCM	1. √FAN – OFF
		2. √O2 ACT – OFF
		3. √COMM mode – OFF
	AW18H	4. PWR/BATT CHGR EMU 1,2 BUS SEL (two) – OFF
	DCM	5. Swap SCUs
		6. PWR – BATT
	AW18H	7. √PWR/BATT CHGR EMU 1,2 MODE (two) – PWR
		8. PWR/BATT CHGR EMU 1,2 BUS SEL (two) – MNA(MNB)
		9. √EMU INPUT 1,2 volts = 18.0-20.0
	DCM	10. PWR – SCU

SCU SWAP (MANNED)

BOTH	DCM	1. Temp control vlv – Max C
	O6:A1R	2. Perform EVA COMM CONFIG (EVA PREP), steps 2, 3, and 6
	DCM	3. COMM mode – PRI
		4. √Comm FREQ – LOW
		5. PWR – BATT
	AW18H	6. PWR/BATT CHGR EMU 1,2 BUS SEL (two) – OFF
	DCM	7. Swap SCUs
	AW18H	8. √PWR/BATT CHGR EMU 1,2 MODE (two) – PWR
		9. PWR/BATT CHGR EMU 1,2 BUS SEL (two) – MNA(MNB)
		10. √EMU INPUT 1,2 volts = 18.0-20.0
	DCM	11. PWR – SCU
		12. COMM mode – HL
		13. Temp control vlv – as reqd

EMU COLD RESTART (MANNED)

> WARNING
> This procedure should only be used at airlock pressures of 8.0 psi and higher. Fan and O2 will be off during restart. Perform restart as quickly as possible

DCM
1. FAN – OFF
2. O2 ACT – OFF

If PWR – SCU:
3. PWR – BATT (2 sec)
4. PWR – SCU

If PWR – BATT:
5. PWR – SCU (2 sec)
6. PWR – BATT

7. O2 ACT – IV
8. FAN – ON

12.1 STS EVA DECONTAMINATION

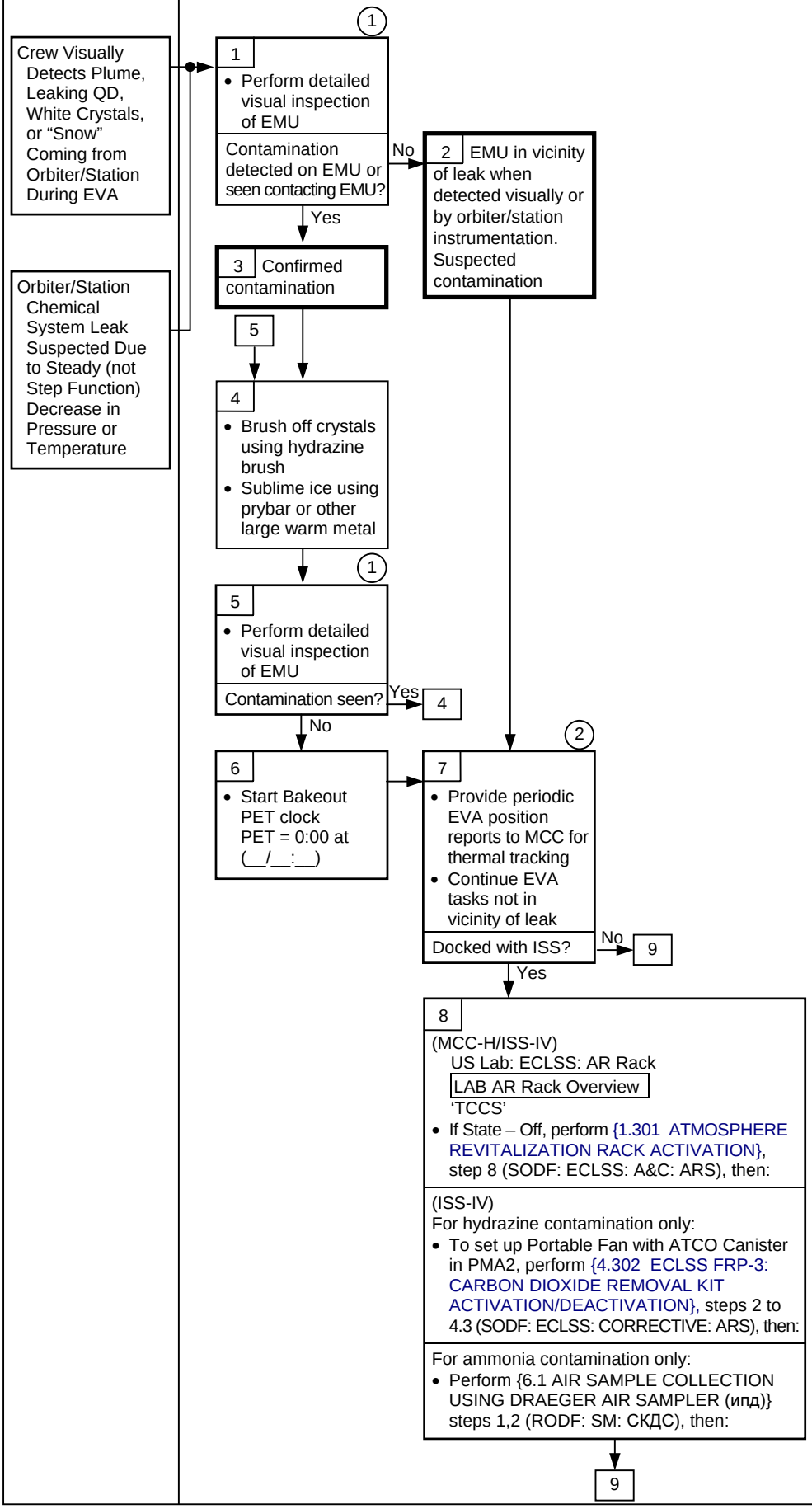

(1) Ammonia visual inspection should be performed in night or shaded ambient light with helmet spot lights used to illuminate TMG. Use of sunvisor during inspection should be avoided. View TMG from an oblique angle. Following are indications of ice on EMU:

a. Loss of TMG thread pattern
b. Waxy gloss or hard pack snow appearance
c. Unusual contours

(2) For confirmed contamination 1:55 (2:10 if from ISS thruster) of EMU consumables must be available to support activities from ingress through EMU doffing. For suspected contamination 0:55 (1:10 if from ISS thruster) of consumables reqd. EVA tasks must be deferred to protect these consumables. Bakeout on SCU does not consume Metox/LiOH if helmet purge valve is open

12.1 (Cont)

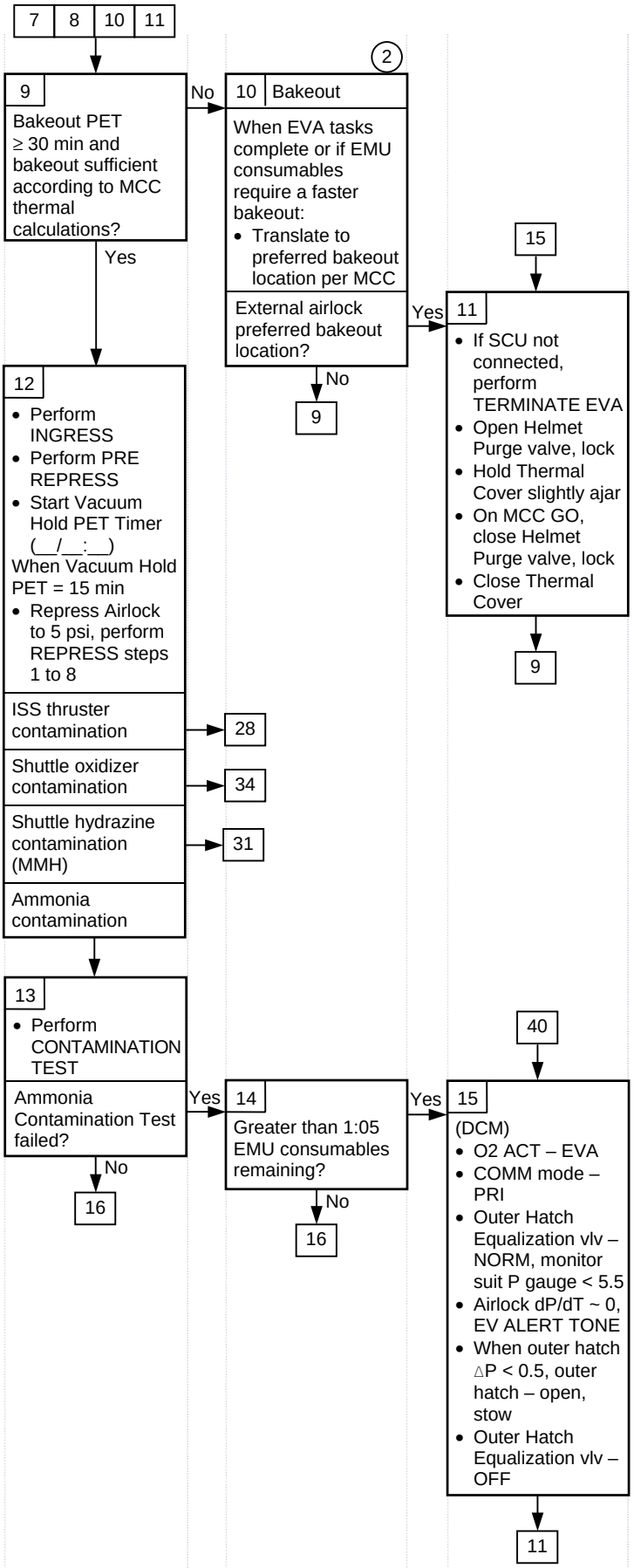

(2)
For confirmed contamination 1:55 (2:10 if from ISS thruster) of EMU consumables must be available to support activities from ingress through EMU doffing. For suspected contamination 0:55 (1:10 if from ISS thruster) of consumables reqd. EVA tasks must be deferred to protect these consumables. Bakeout on SCU does not consume Metox/LiOH if helmet purge valve is open

12.1 (Cont)

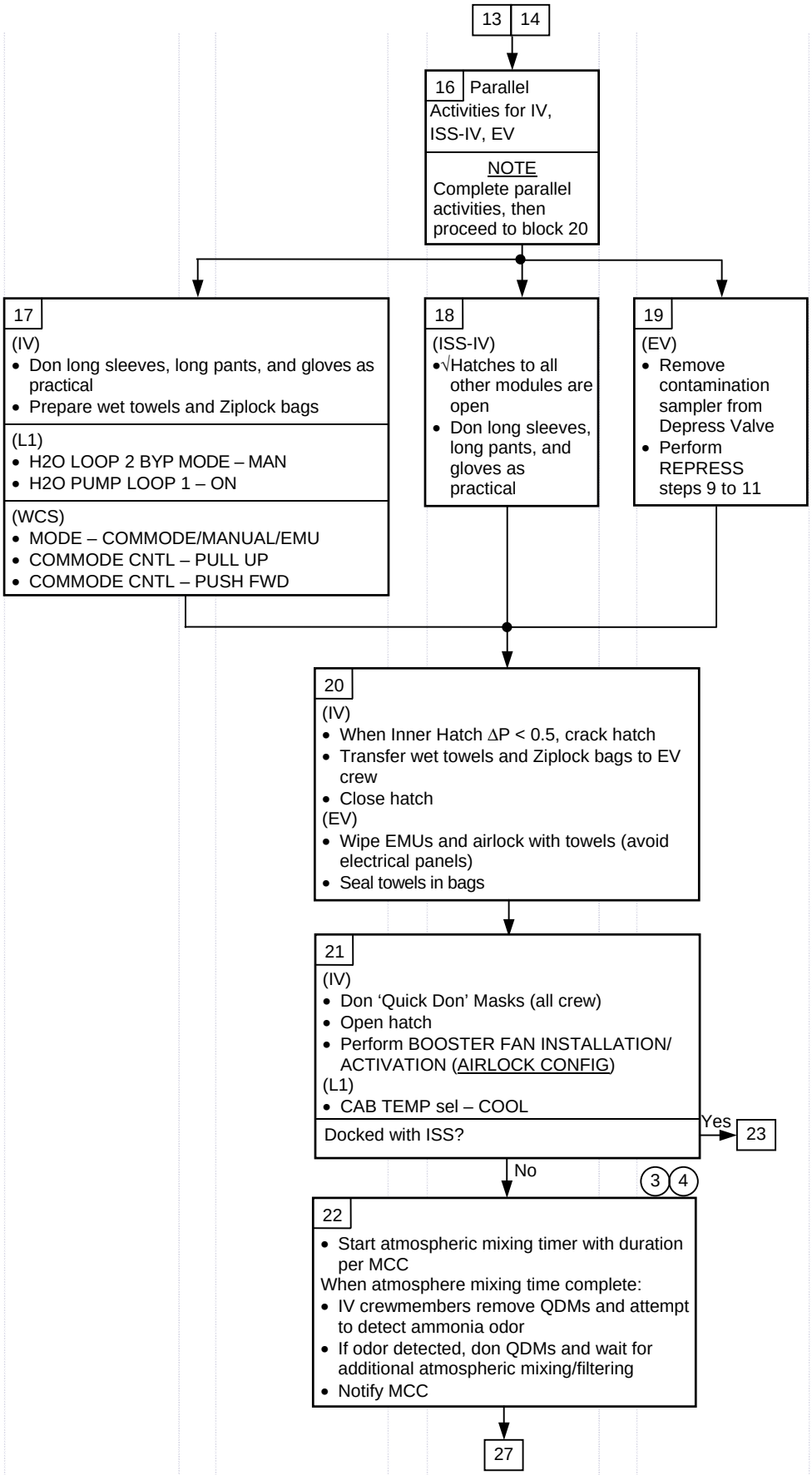

(3)
For ammonia or oxidizer only, if the contamination test passed at 5 psia, no further mixing is required. If the test failed and EMU consumables would not support an additional depress/repress cycle, atmospheric mixing with Booster Fan should be performed for 10 min to completely mix the airlock and crew module. Maximum dilution is approximately 12:1 (airlock only) or 7:1 (tunnel adapter). Dilution with ISS will further reduce concentration by 6:1 over 2 hr

(4)
The WCS filter will reduce ammonia concentration by 63% every 60 min for a shuttle equivalent volume

12.1 (Cont)

21

23

(MCC-H)
- Inhibit ISS Rapid Depress Response and Alarm
- Verify Russian Segment Rapid Depress Response inhibited

(EV)
- ODS Upper Hatch Equal vlv – NORM
- When ODS Upper Hatch $\Delta P < 0.5$, open hatch
- ODS Upper Hatch Equal vlv – OFF

(ISS IV)
- Don PBA (all crew)
- Perform {2.104 HATCH OPEN AND SHUTTLE/ISS DUCT INSTALLATION} step 13 to end of procedure (SODF: JNT OPS: INGRESS STATION), then:

25

24

(ISS IV)
- In airlock, perform {6.1 AIR SAMPLE COLLECTION USING DRAEGER AIR SAMPLER (ипд)} step 3 (RODF: SM: СКДС), then:

Draeger reading > 10 ppm?

Yes → **25**

(ISS IV)
- Egress Airlock
- Discard used Draeger tube
- Wait 10 min for atmospheric mixing and dilution

24

No ↓

26
- Doff PBA and QDMs
- Discard used Draeger tube and tips
- Stow unused Draeger tubes and pump

22

27

On MCC call:
- Perform POST EVA

(L1)
- H2O PUMP LOOP 1 – GPC
- H2O LOOP 2 BYP MODE – AUTO
- CAB TEMP sel – adj rotary as desired

(WCS)
- COMMODE CNTL – OFF (BACK/DOWN)
- MODE – AUTO

12.1 (Cont)

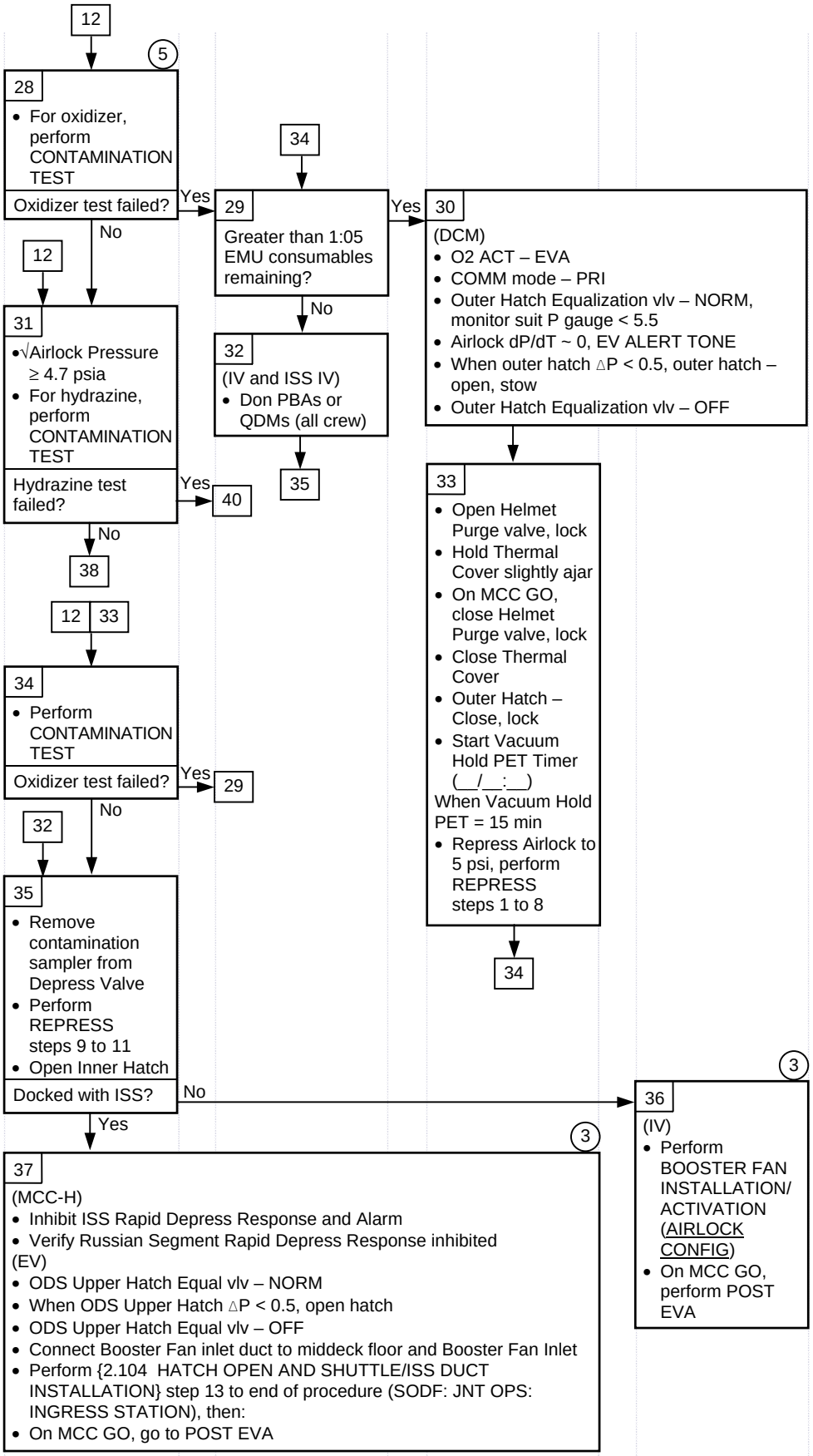

(3)
For ammonia or oxidizer only, if the contamination test passed at 5 psia, no further mixing is required. If the test failed and EMU consumables would not support an additional depress/repress cycle, atmospheric mixing with Booster Fan should be performed for 10 min to completely mix the airlock and crew module. Maximum dilution is approximately 12:1 (airlock only) or 7:1 (tunnel adapter). Dilution with ISS will further reduce concentration by 6:1 over 2 hr

(5)
On ISS, it is impossible to determine if a propulsion leak was fuel or oxidizer. Therefore, tests must be performed for both oxidizer and UDMH

12.1 (Cont)

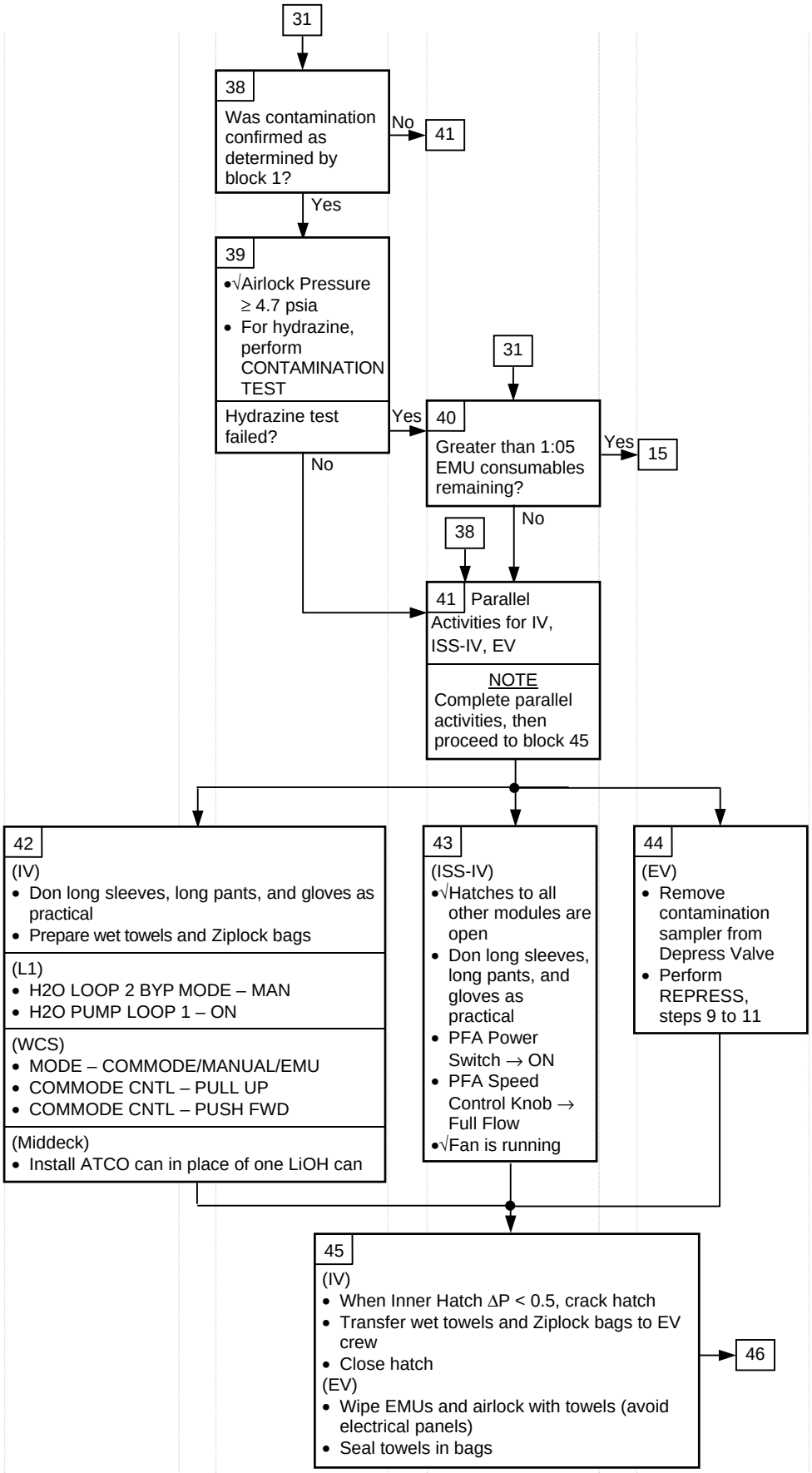
31
38
Was contamination confirmed as determined by block 1?
No
41
Yes
39
•√Airlock Pressure ≥ 4.7 psia
• For hydrazine, perform CONTAMINATION TEST
Hydrazine test failed?
Yes
No
31
40
Greater than 1:05 EMU consumables remaining?
Yes
15
No
38
41 Parallel Activities for IV, ISS-IV, EV
NOTE
Complete parallel activities, then proceed to block 45
42
(IV)
• Don long sleeves, long pants, and gloves as practical
• Prepare wet towels and Ziplock bags
(L1)
• H2O LOOP 2 BYP MODE – MAN
• H2O PUMP LOOP 1 – ON
(WCS)
• MODE – COMMODE/MANUAL/EMU
• COMMODE CNTL – PULL UP
• COMMODE CNTL – PUSH FWD
(Middeck)
• Install ATCO can in place of one LiOH can
43
(ISS-IV)
•√Hatches to all other modules are open
• Don long sleeves, long pants, and gloves as practical
• PFA Power Switch → ON
• PFA Speed Control Knob → Full Flow
•√Fan is running
44
(EV)
• Remove contamination sampler from Depress Valve
• Perform REPRESS, steps 9 to 11
45
(IV)
• When Inner Hatch ΔP < 0.5, crack hatch
• Transfer wet towels and Ziplock bags to EV crew
• Close hatch
(EV)
• Wipe EMUs and airlock with towels (avoid electrical panels)
• Seal towels in bags
46

12.1 (Cont)

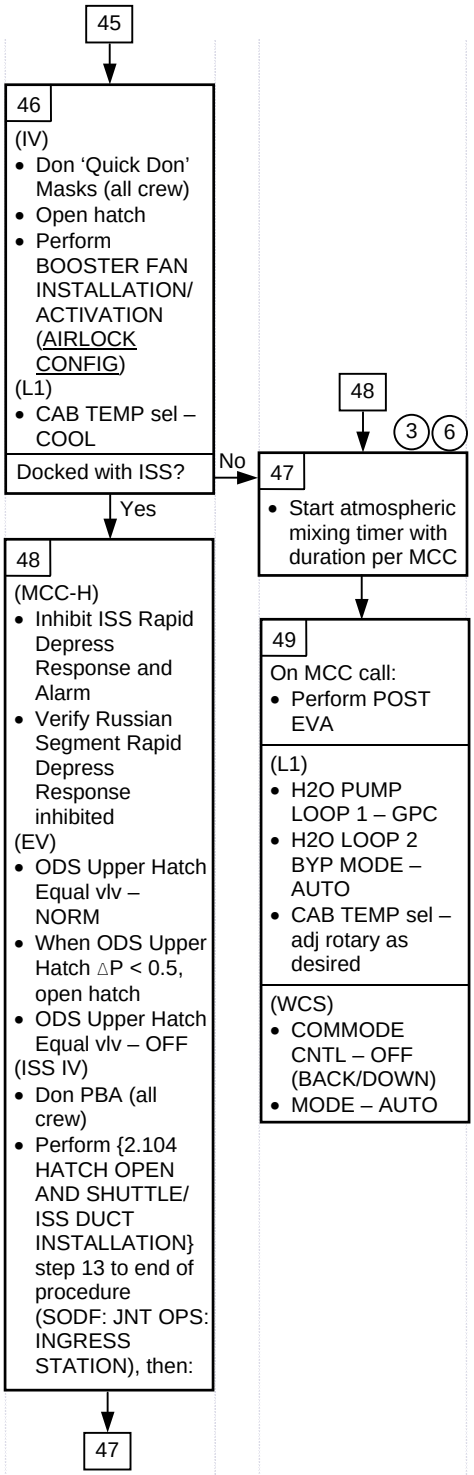

(3)
For ammonia or oxidizer only, if the contamination test passed at 5 psia, no further mixing is required. If the test failed and EMU consumables would not support an additional depress/repress cycle, atmospheric mixing with Booster Fan should be performed for 10 min to completely mix the airlock and crew module. Maximum dilution is approximately 12:1 (airlock only) or 7:1 (tunnel adapter). Dilution with ISS will further reduce concentration by 6:1 over 2 hr

(6)
Each ATCO canister will reduce the hydrazine concentration by 63% every 90 min for a shuttle equivalent volume

CONTAMINATION TEST

To be performed in conjuction with 12.1 STS EVA DECONTAMINATION. It is performed with the external airlock at 5 psia following suspected hydrazine or oxidizer contamination

EV 1. √Inner hatch Equal vlv (two) – OFF

IV 2. Wait 30 sec for pressure stabilization
Record AIRLK P from EV DCM

	1	2	3
2. AIRLK P			

EV AW82B 3. Attach STS Contamination Sampler to depress valve

AW18A 4. √LTG FLOOD (four) – ON

5. Go to appropriate chemical test steps below

AMMONIA CONTAMINATION TEST

6. Using RET, retrieve ammonia detector from Contamination Detection Kit
7. Verify Draeger tube color – yellow

* Use new tube if not proper color *

> CAUTION
> Minimize contact with fracture regions of Draeger tube. Minor glove RTV damage is possible, but protective pressure bladders and restraints unaffected

8. Using equipment hook of RET as a lever, break off both tether points on ammonia detector

AW82B 9. Insert ammonia detector into STS Contamination Sampler with orientation that allows number scale to be read

> WARNING
> Precise sampling times are critical for accurate testing. IV should coordinate start of timer with opening of AIRLK DEPRESS valve

10. AIRLK DEPRESS vlv – 5
11. Start timer (3:30 sampling time)

When timer expired:

12. AIRLK DEPRESS vlv – CL

NOTE
If ammonia is present, Draeger tube will turn deep blue

DCM 13. Compare AIRLK P to pressure in step 2

If $\Delta P \geq 0.1$ psi (indicates leak in sampling hardware):

14. To repress airlock to 5.0 psi, Inner hatch Equal vlv (one) – throttle NORM to OFF
15. Go to step 1 to repeat test with new Draeger tube

16. Determine test results based on table 1 and report to MCC

TABLE 1.- AMMONIA TEST PASS/FAIL CRITERIA

Reaction Line	Report Status	Assumed Concentration with 2x Factor of Safety
None seen	Passed	10 ppm
0 < X < 2	Passed	30 ppm
2 < X < 5	Failed	60 ppm
5 < X < 25	Failed	180 ppm

17. Continue 12.1 STS EVA DECONTAMINATION

OXIDIZER CONTAMINATION TEST

18. Using RET, retrieve nitrous fumes detector from Contamination Detection Kit
19. Verify Draeger tube color pale gray

* Use new tube if not proper color *

CAUTION
Minimize contact with fracture regions of Draeger tube. Minor glove RTV damage is possible, but protective pressure bladders and restraints unaffected

AW82B 20. Using equipment hook of RET as a lever, break off both tether points on nitrous fumes detector

WARNING
Precise sampling times are critical for accurate testing. IV should coordinate start of timer with opening of AIRLK DEPRESS valve

21. AIRLK DEPRESS vlv – 5
22. Start timer (15:00 sampling time)

When timer expired:

23. AIRLK DEPRESS vlv – CL

NOTE
If oxidizer present, Draeger tube will turn blue gray

DCM 24. Compare AIRLK P to pressure in step 2

If $\Delta P \geq 0.1$ psi (indicates leak in sampling hardware)

25. To repress airlock to 5.0 psi, Inner hatch Equal vlv (one) – throttle NORM to OFF
26. Go to step 1 to repeat test with new Draeger tube
27. Determine test results based on table 2 and report to MCC

TABLE 2.- OXIDIZER TEST PASS/FAIL CRITERIA

Reaction Line	Report Status	Assumed Concentration with 2x Factor of Safety
X < 0.5	Passed	1.5 ppm
0.5 < X < 1	Failed	3 ppm
1 < X < 2	Failed	6 ppm

28. Continue 12.1 STS EVA DECONTAMINATION

HYDRAZINE CONTAMINATION TEST

29. Retrieve hydrazine detector from Contamination Detection Kit

NOTE

Hydrazine detector is double bagged. Inner bag is not captive and should be constrained to prevent FOD

30. Tear open hydrazine detector packaging
    Stow packaging in small trash bag
31. √Initial coupon color – white

AW82B 32. Insert hydrazine detector into STS Contamination Sampler

33. Helmet Lights – OFF

WARNING

Precise sampling times are critical for accurate testing. IV should coordinate start of timer with opening of AIRLK DEPRESS valve

34. AIRLK DEPRESS vlv – 5
35. Start timer (10:00 sampling time)

When timer expired:

36. AIRLK DEPRESS vlv – CL

DCM 37. Compare AIRLCK P to pressure in step 2

If $\Delta P \geq 0.2$ psi (indicates leak in sampling hardware)

38. To repress airlock to 5.0 psi, Inner hatch Equal vlv (one) – throttle NORM to OFF
39. Go to step 1 to repeat test with new hydrazine detector

NOTE

Hue and intensity of test coupon color change is proportional to hydrazine concentration. For shuttle thruster leaks, compare coupon to US Propellant (MMH) color scale. For ISS thruster leaks, compare coupon to Russian Propellant (UDMH) color scale

40. Determine test results based on table 3 and report to MCC

TABLE 3.- HYDRAZINE TEST PASS/FAIL CRITERIA

MMH	**Report Status**	**Assumed Concentration with 2x Factor of Safety**
No color change seen	Passed	28 ppb
Unexposed < X < 25 ppb	Passed	50 ppb
25 ppb < X < 50 ppb	Failed	100 ppb
50 ppb < X < 100 ppb	Failed	200 ppb
UDMH		
No color change seen	Passed	54 ppb
Unexposed < X < 50 ppb	Passed	100 ppb
50 ppb < X < 100 ppb	Failed	200 ppb
100 ppb < X < 300 ppb	Failed	600 ppb

41. Continue 12.1 STS EVA DECONTAMINATION

SAFER BATTERY CHANGEOUT (15 min)

	1. Unstow new battery
PM	2. Install Inhibitor
	3. √MAN ISOL vlv – CL (up)
HCM	4. √PWR – OFF
PM	5. Remove T-Handle tool from lanyard while keeping Inhibitor installed on SAFER
	6. Separate TMG Velcro on bottom of prop module to access battery
	7. Loosen captive screws (eight) using 9/64-in Hex Wrench on T-Handle tool
	8. Remove battery; disconnect battery umbilical connector
	9. Stow used battery
	10. Record new battery serial number (<u>SAFER CHECKOUT RESULTS</u> Cue Card) Report old battery serial number and new stowage location to MCC as comm permits
	11. Connect new battery umbilical connector; install battery
	12. Tighten captive screws (eight)
	13. Reattach TMG Velcro
	14. Attach T-Handle tool to lanyard
	15. Go to SAFER CHECKOUT

BENDS TREATMENT ADAPTER (BTA) INSTALLATION (IN-SUIT)

BTA PREP

1. Unstow BTA with 3/8-in Wrench

EMU
2. Cut/break TMG tacks (see 12-23)
3. Unzip PLSS TMG (avoid pulling on antenna cable)
4. Remove impact shield
5. Disconnect hatch marked cable P3 (see 12-23); cut cable if reqd

NOTE
It may be necessary to extend the legs forward to access the test port in a pressurized EMU

6. Remove test port F plug on SOP using 3/8-in end of BTA Wrench (4-6 turns ccw) (see SECONDARY OXYGEN PACKAGE below)

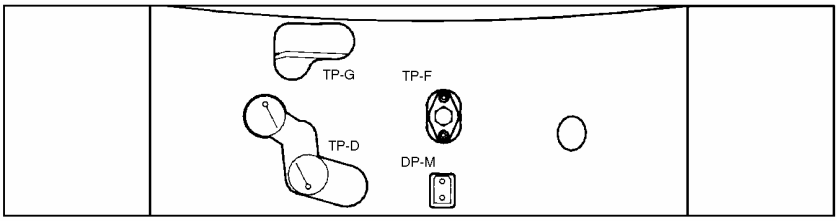

SECONDARY OXYGEN PACKAGE

BTA
7. Stow test port F plug (see 12-23) on BTA
8. Unstow poppet keeper screw from BTA, temp stow in EMU Servicing Kit

BTA TREATMENT

9. √SCU connected to DCM
10. Align BTA engage mark with PPRV mark
    Connect BTA to PPRV (rotate BTA cw to hard stop to lock), √locked

AW82B
11. √EV-1(EV-2) O2 vlv – OP

MD(flr)
12. √EMU O2 ISOL vlv – OP

DCM
13. √PWR – SCU
14. √FAN – ON
15. √COMM mode – HL, vol as reqd
16. DISP – PRO until BTA?OFF displayed
    – YES (hold for 2 sec), verify ENABLE BTA? displayed
    – YES (hold for 2 sec), verify BTA ENABLED displayed

If biomed reqd:

17. Perform EVA COMM CONFIG (EVA PREP), steps 1-6

DCM
18. Comm FREQ – LOW
    COMM mode – PRI

WCS
19. √FAN SEP same as HOSE BLOCK
20. MODE – COMMODE/MANUAL/EMU, posn guard over sw (√airflow, WCS ON lt on)

AW82D
21. √EMU 1(2) H2O SPLY – CL (tb-CL)

AW82H
22. EMU 1(2) H2O SPLY WASTE reg – MAN OP

AW82D
23. EMU 1(2) H2O WASTE – OP (tb-OP) (until H2O WP < 7 and stable for ~1 min)
24. EMU 1(2) H2O WASTE – CL (tb-CL)

AW82H
25. EMU 1(2) H2O SPLY WASTE reg – REGULATING

WCS
26. MODE – AUTO (√WCS ON lt off)

DCM
27. √STATUS: SUIT P = 4.2-4.4
28. O2 ACT – OFF (until SUIT P stabilizes)

NOTE

Suit pressure will nominally increase when O2 actuator taken to OFF. Suit P = H2O GP when O2 ACT – OFF. For actual suit P > 5.9 psi, suit P can only be directly read as H2O GP; actual suit P = 4.7 to 5.5 psi above BTA gauge pressure

CAUTION

If BTA gauge pressure increases while O2 ACT – PRESS, immediately set O2 ACT – OFF to prevent a hazardous condition; contact MCC

29. O2 ACT – PRESS (for 15 sec), √BTA gauge not increasing when O2 ACT – PRESS
30. O2 ACT – OFF (until H2O GP stable)
31. √STATUS: H2O GP
    DISP – YES (hold for 2 sec) to lock parameter; re-lock every 5 min
32. Repeat steps 29,30 until H2O GP = 6.0 psid and stable on DCM display with O2 ACT – OFF

As reqd to maintain H2O GP = 6.0 psid:

33. Repeat steps 29,30

NOTE

Initial treatment will be at 6 psid for Cuffs 2 and 3 and will be increased to 8 psid if symptoms do not resolve. Initial treatment for Cuff 4 will be 8 psid

34. Contact Surgeon for treatment length and changes in treatment pressure

BENDS TREATMENT ADAPTER (BTA) INSTALLATION (POST SUIT DOFFING)

BTA PREP

1. Unstow BTA with 3/8-in Wrench

EMU
2. Cut/break TMG tacks (see 12-23)
3. Unzip PLSS TMG (avoid pulling on antenna cable)
4. Remove impact shield
5. Disconnect hatch marked cable P3, cut cable if reqd (see 12-23)
6. Remove test port F plug on SOP using 3/8-in end of BTA Wrench (4-6 turns ccw) (see SECONDARY OXYGEN PACKAGE below)

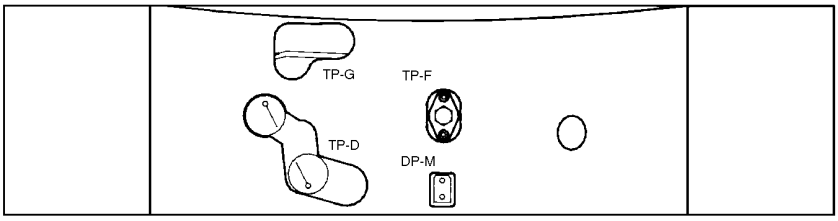

SECONDARY OXYGEN PACKAGE

BTA
7. Stow test port F plug (see 12-23) on BTA

If LiOH replacement reqd by MCC:

8. Unstow new LiOH cartridge
9. Remove used LiOH cartridge
10. Holding new LiOH cartridge w/aluminum plate serial number facing self, remove caps (left first), √O-ring seals for damage, install LiOH (attach Velcro retainer strap)
11. Install caps on used LiOH cartridge
    Tape an X on used LiOH cartridge and stow

BTA TREATMENT

12. √SCU connected to DCM

BTA
13. Unstow Poppet Keeper Screw from BTA

EMU
14. Open Positive Pressure Relief Valve (PPRV) using BTA poppet keeper (thread cw to hard stop, pull, tighten nut) (see 12-23)
15. Align BTA engage mark with PPRV mark
    Connect BTA to PPRV (rotate BTA cw to hard stop to lock); √locked
16. Don MAG, LCVG, biomed
17. Fill drink bag from galley, remove gas and insert drink bag in restraint bag
18. Install Drink Bag Restraint Bag in HUT and dispose of fill tool in wet trash

AW82B
19. √EV-1(EV-2) O2 vlv – OP

MD(flr)
20. √EMU O2 ISOL vlv – OP

DCM
21. PWR – BATT

> CAUTION
> EMU must be on BATT pwr when airlock pwr supply turned on

AW18H
22. PWR/BATT CHGR EMU 1(2) MODE – PWR
    BUS SEL – MNA(MNB)

DCM
23. PWR – SCU
24. √Waist ring – op
25. Don LTA (attach donning handles as reqd)
26. √Suit arms aligned
27. √Wrist disconnects – op
28. Don thumb loops
29. √Biomed connector outside of HUT
30. Don HUT

31. Release thumb loops
32. √Suit arms aligned
33. Don comm cap

DCM 34. √COMM mode – HL, vol as reqd

If biomed reqd:

35. Perform EVA COMM CONFIG (EVA PREP), steps 1-6

DCM 36. Comm FREQ – LOW
COMM mode – PRI

37. Connect biomed to elec harness
38. Connect LCVG to multiple water connector, √locked
39. √Thermal cover clear of waist ring
40. Waist ring – engage posn
41. Connect waist ring to HUT, √locked
42. Wrist rings – engage posn
43. Don EV gloves, √locked
44. √Mike boom posn

DCM 45. FAN – ON

46. √Elec harness clear of neck ring
47. Don helmet, √locked
48. √Helmet purge vlv – cl, locked
49. √PURGE vlv – op
50. O2 ACT – PRESS, begin purge clock (12 min)

WCS 51. √FAN SEP same as HOSE BLOCK

52. MODE – COMMODE/MANUAL/EMU, posn guard over sw (√airflow, WCS ON lt on)

AW82D 53. √EMU 1(2) H2O SPLY – CL (tb-CL)

AW82H 54. EMU 1(2) H2O SPLY WASTE reg – MAN OP

AW82D 55. EMU 1(2) H2O WASTE – OP (tb-OP)

When N2 purge time = 12 min:

56. EMU 1(2) H2O WASTE – CL (tb-CL)

AW82H 57. EMU 1(2) H2O SPLY WASTE reg – REGULATING

WCS 58. MODE – AUTO (√WCS ON lt off)

DCM 59. PURGE vlv – cl (dn)

60. √STATUS: SUIT P = 4.2-4.4
61. DISP – PRO until BTA?OFF displayed
– YES (hold for 2 sec), verify ENABLE BTA? displayed
– YES (hold for 2 sec), verify BTA ENABLED displayed

NOTE

Suit P will increase about ~.5 psi each time O2 ACT – OFF

62. O2 ACT – OFF (until Suit P incr stabilizes)
63. O2 ACT – PRESS (for 15 sec)
64. Repeat steps 62,63 until Suit P = 6.0 psig on BTA gauge

NOTE

BTA relief valve relieves at 7.95-8.45 psig

As reqd to maintain Suit P = 6.0 psig:

65. Repeat steps 62,63

NOTE

Initial treatment will be at 6 psid for Cuffs 2 and 3 and will be increased to 8 psid if symptoms do not resolve. Initial treatment for Cuff 4 will be 8 psid

66. Contact Surgeon for treatment length and changes in treatment pressure

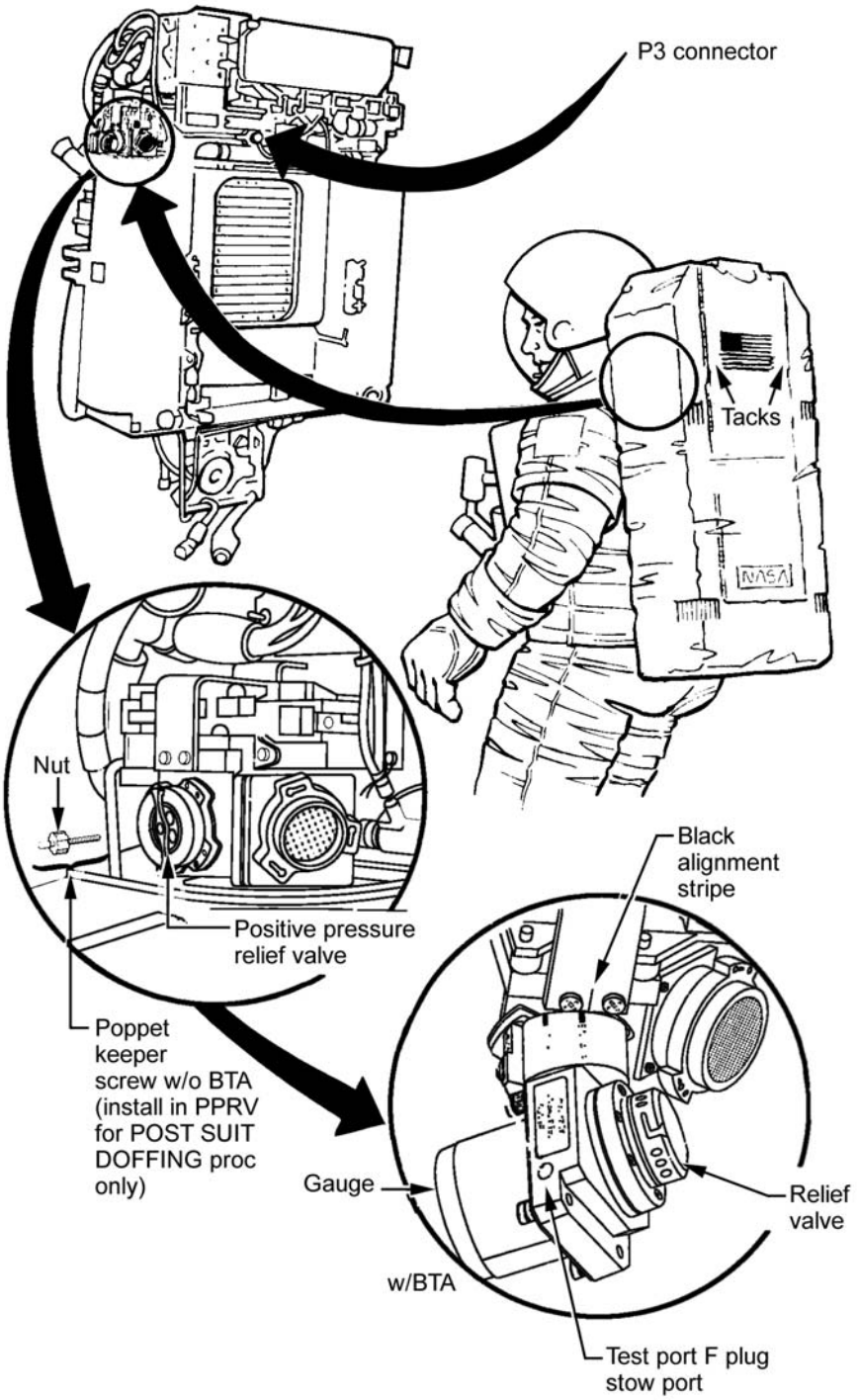

BTA LOCATION ON EMU

EMU RESIZE (30 min)

NOTE

Procedures written for arm, thigh, and boot disconnects. Arm, thigh, and boot sizing rings are not interchangeable and cannot be stacked. See figures below and next page as reference during procedure

1. Identify component(s) to be installed per appropriate resize matrix

Old component(s)/ EMU

2. Peel back TMG from disconnect

If replacing arm components:

3. √REBA sw – OFF (toward left arm of suit)
4. Disconnect lower arm power harness from gloves and upper arm

> WARNING
> Threads on sizing rings and arm/leg/boot segments have sharp edges. Avoid contact with skin and suit bladder

5. Lock 1 – OPEN (on arm, lock may reengage due to bladder)
6. Lock 2 – hold OPEN while turning ring to engage lock 2 OPEN against disconnect
7. Lock 3 – hold OPEN while turning ring in OPEN direction
8. Demate segment/ring
9. Install protective caps on ends of components; place rings in protective pouches
10. Repeat steps 2-9 as reqd

New component(s)/ EMU

11. √Proper size located on bladder by disconnect
12. √All seals, threads and wipe with lint-free wipe (EMU Servicing Kit)
13. Lock 1 – OPEN (lock may reengage due to bladder on arm)
14. Align new component yellow hash marks with yellow bar on disconnect
15. Turn rings in LOCK direction
16. √Lock 2,3 – locked
17. Lock 1 – LOCK
18. √Cam adjustments (4 per segment) per appropriate resize matrix
19. If lower arm replaced, connect lower arm power harness to upper arm
20. Remate TMG covering disconnect
21. Repeat steps 11-20 as reqd

Old component(s)/ EMU

22. Stow replaced component(s)

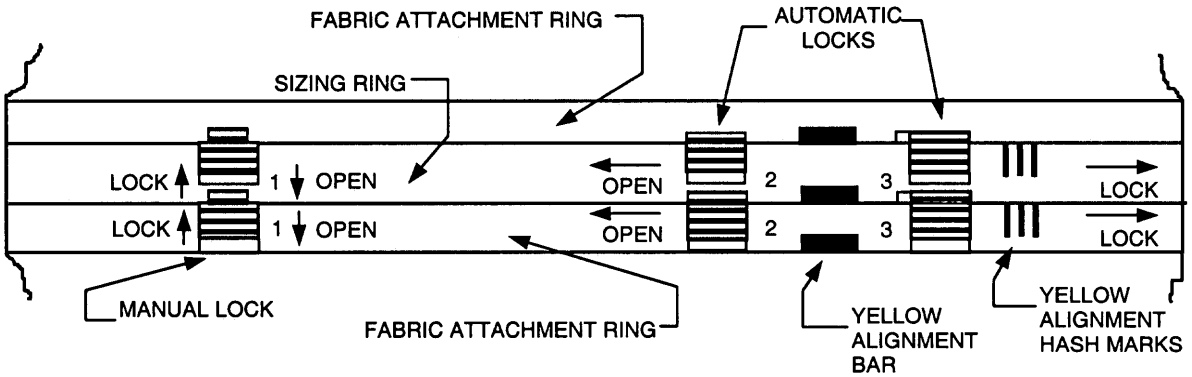

DISCONNECT IN LOCKED POSITION

ARM CAM ADJUSTMENT
(0.25-in per cam)

NOTES

Cam Adjuster only rotates in one direction.

Cam Adjuster should click and lock in the full SHORT and full LONG positions.

Cam positions/arms must be symmetric; likely minimum of four (4) cams to be adjusted

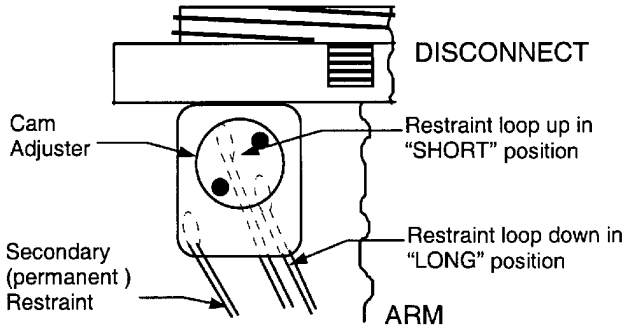

WAIST CAM ADJUSTMENT
(1.0-in per cam)

NOTES

After adjusting, verify that restraint is routed around proper pin; that material is not damaged, twisted or pinched; and that movable pin is fully inserted.

With restraint in LONG position, the darkened area on Resizing Pull Tab should NOT be easily visible.

With restraint in SHORT position, the darkened area on Resizing Pull Tab should be easily visible.

Cam positions must be symmetric; minimum of two (2) cams to be adjusted

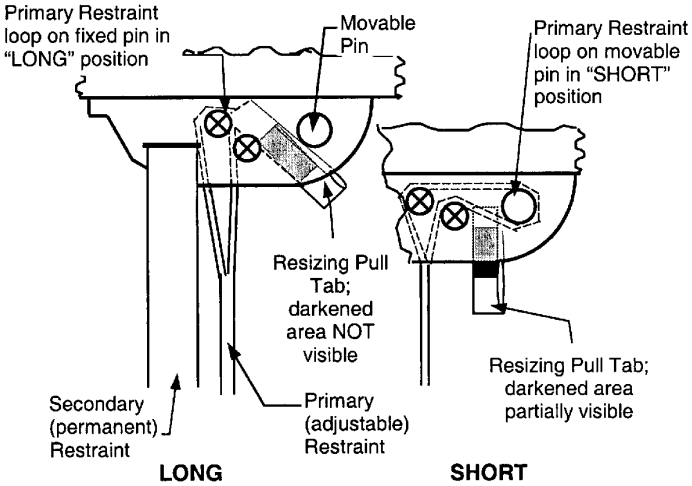

LEG CAM ADJUSTMENT
(0.5-in per cam)

NOTE

After adjusting, verify that restraint is routed around the oval cam; that material is not damaged, twisted or pinched; and that Movable Pin is fully inserted.

Cam positions/legs must be symmetric; likely minimum of four (4) cams to be adjusted

CAUTION
In SHORT position, the Movable Pin must be inserted thru oval cam, not just thru the restraint loop
In LONG position, the restraint must NOT be around the Movable Pin; verify that oval cam and restraint are down

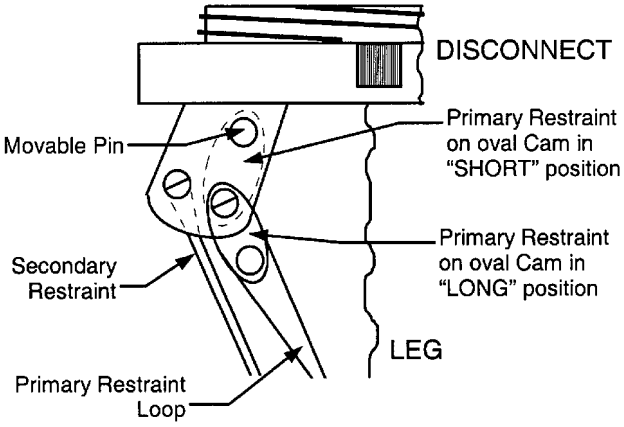

This Page Intentionally Blank

Replace this page with page(s) from Flight Supplement

Replace this page with page(s) from Flight Supplement

ORBITER CONTINGENCY EVA

PAYLOAD BAY EVA NOMENCLATURE 14-2
RMS/PRLA CONTINGENCY EVA..... 14-3
96 BOLT PRE-EVA TOOL CONFIG 14-13
EVA TIMELINE..... 14-14
CAPTURE LATCH MANUAL RELEASE (ODS/PMA) 14-19
96 BOLT EVA LAYOUT 14-21
PLBD LATCH TOOL PLACEMENT WITH DUAL LATCH GANG FAILURES 14-22

PAYLOAD BAY EVA NOMENCLATURE

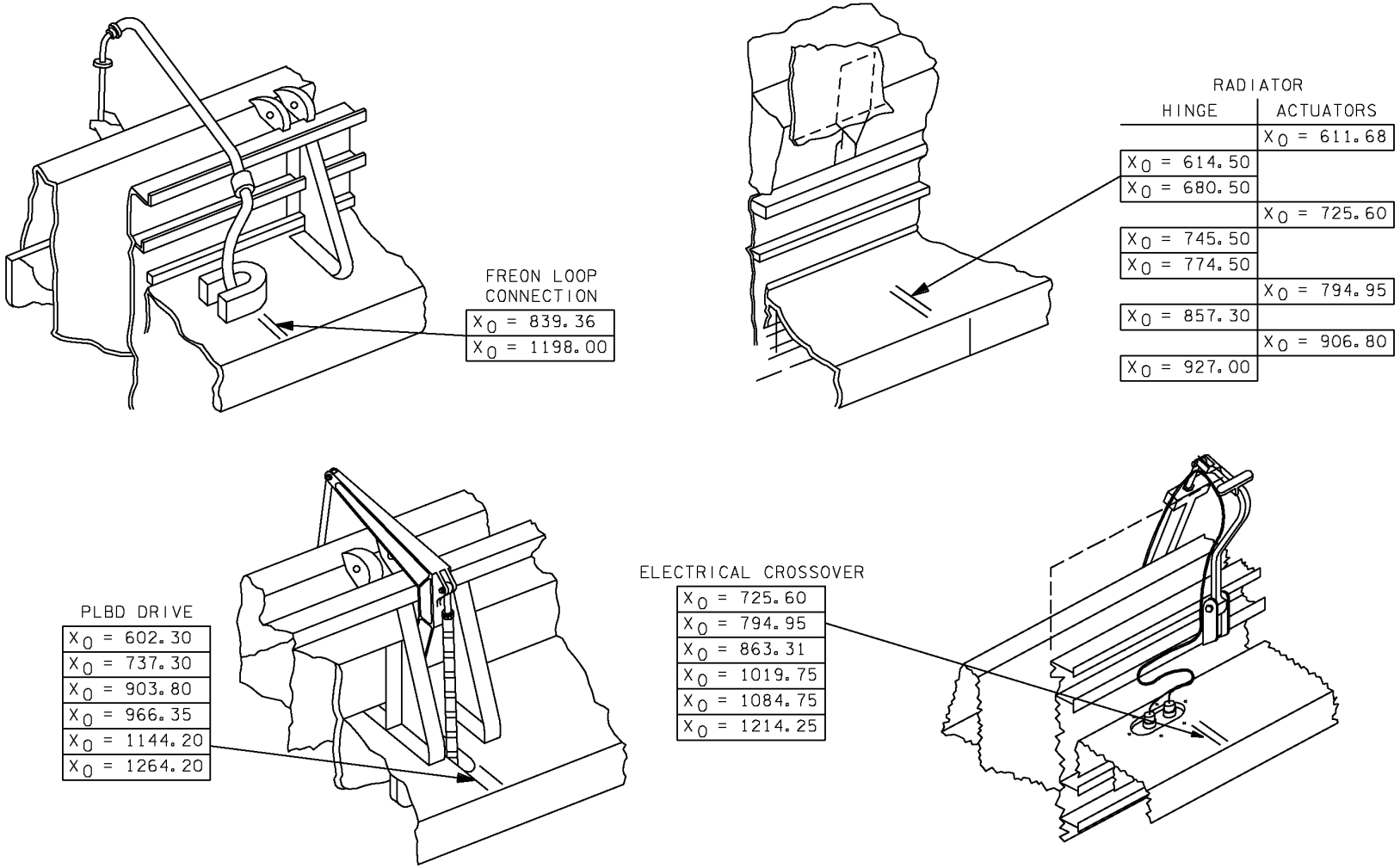

RMS/PRLA CONTINGENCY EVA

FOR RMS/PRLA FAILURES:

	PRE EVA RMS CONFIG [1]	
IV		If MRL fails to latch:
	A8L	√RMS R-F-L tb (three) – gray
		√RMS tb – STO
		Go to RMS TIEDOWN [4]
		If MPM fails to stow(deploy):
	A8L	√RMS RETEN LAT – LAT (tb-LAT)
		√MPMs stowed(deployed) as far as possible
		Go to MPM STOW/DEPLOY [5]
		If Joint fails:
		Position RMS for easy striker bar access
		Go to RMS JOINT ALIGN [6]

	PRE EVA EE/GF CONFIG [2]	
IV	A8U	BRAKES – ON (tb-ON)
		EE MODE – OFF
	A8L	RMS SEL – OFF
		Go to RMS FLIGHT RELEASABLE GRAPPLE FIXTURE RELEASE [8]

	PRE EVA PRLA CONFIG [3]	
IV	MA73C:C	cb MCA PWR AC1 3Φ MID 1 – op
	:D	AC2 3Φ MID 3 – op
	R13L	PL BAY MECH PWR 1,2 (two) – OFF
	A6U	PL RETEN LOGIC PWR SYS 1,2 (two) – OFF
		LAT (five) – OFF
		Go to PRLA OPEN/CLOSE [9]

FOR RMS/PRLA FAILURES (Cont):

RMS TIEDOWN 4

IV If MRL fail to latch – monitor EV1 and EV2

Refer to RMS TIEDOWN figure, following page, as reqd

RMS TIEDOWN

TOOL BOX – PRDs (2), EVA TRASH BAG
IFM – 9/64-in ALLEN WRENCH (AW)
ELBOW – PRD aft of MPM, peel blanket (fwd of MPM) toward EE; feed hook under cable harness (if reqd, remove cable harness clamp bolt with AW, bend clamp out of way), adjust strap as far fwd as possible
WRIST – PRD aft of MPM, strap rests just fwd of pitch joint opening
END EFFECTOR – PRD fwd of MPM, peel blankets aft and fwd, strap rests aft-most on yaw joint (at roll/yaw I/F), adjust strap under bolt studs

1. Figure eight the strap
2. Pull minimum 6-in slack in strap
3. Ratchet PRD snug, (14 full strokes reqd)
4. √Strap in correct arm location, ratchet tight
5. Reattach blankets

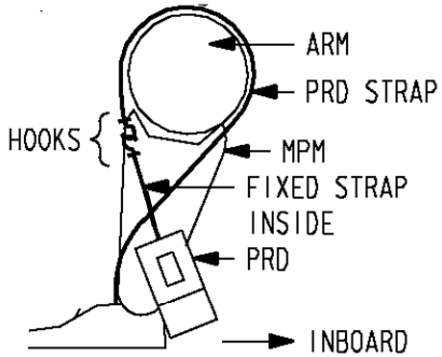

NOT IN EV CUFF 41 03/20/06

MPM STOW/DEPLOY 5

IV1 If MPM fail to stow/deploy, monitor EV1 and EV2, then:

MPM STOW/DEPLOY

TOOL BOX – MPM WRENCH

1. Rotate torque shaft (8 revs) until MPMs are stowed/deployed, X_o=693

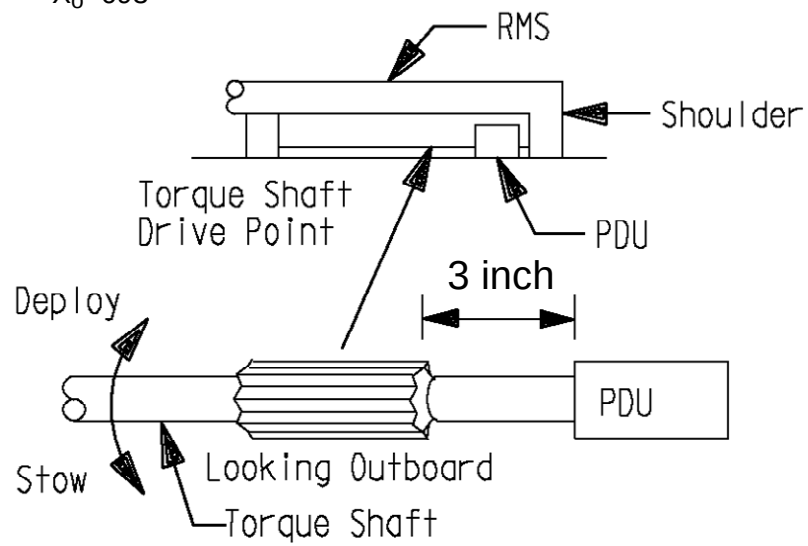

NOT IN EV CUFF 40 03/20/06

IV When MPMs in stow(deploy) position:

A8L √RMS tb – STO(DPY)

or

4: SM 94 PDRS CONTROL

√RMS STO/DPY

11 00 (00 11)

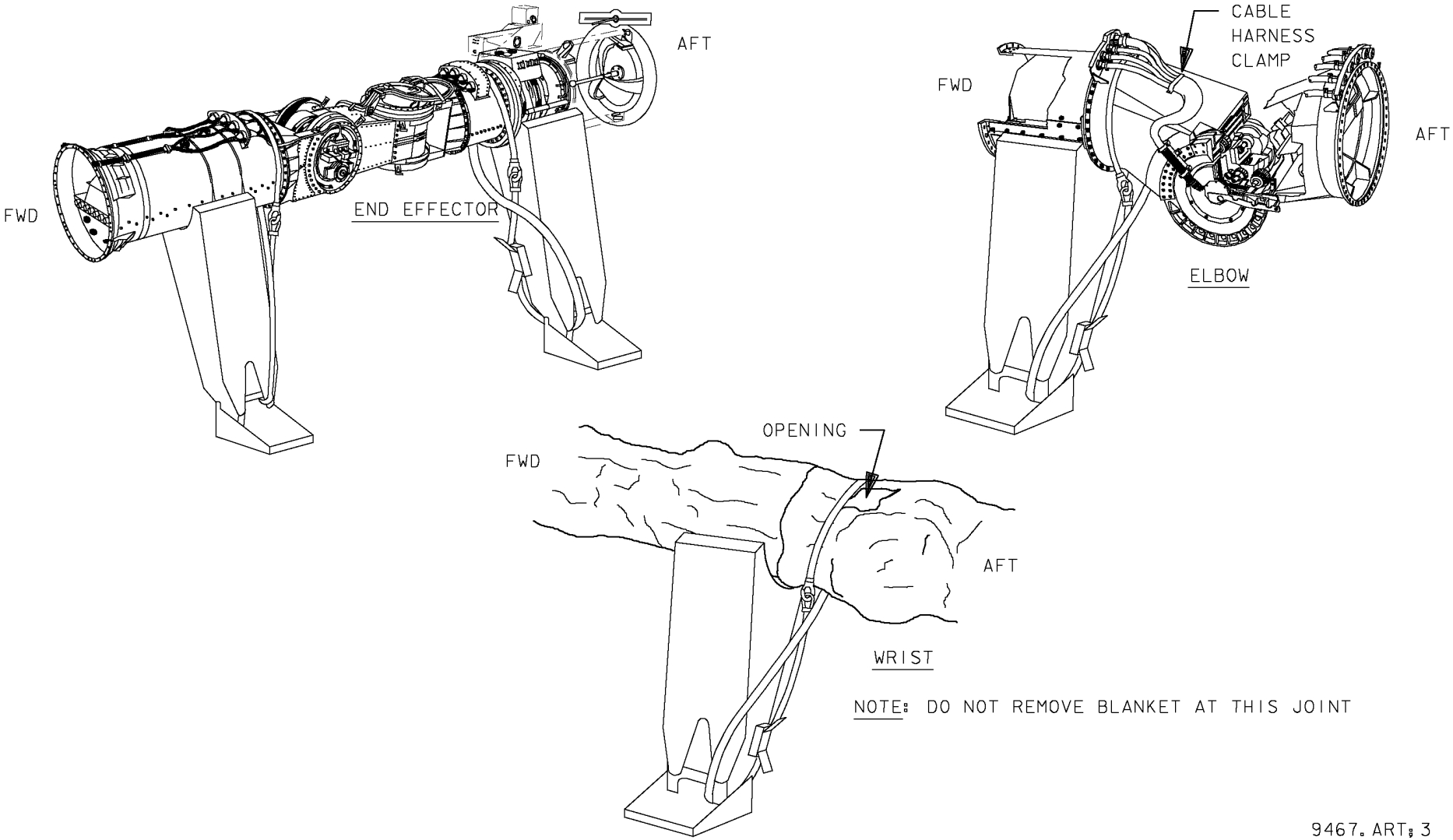
AFT
FWD
END EFFECTOR
CABLE
HARNESS
CLAMP
FWD
AFT
ELBOW
OPENING
FWD
AFT
WRIST
NOTE: DO NOT REMOVE BLANKET AT THIS JOINT
9467.ART:3

RMS TIEDOWN

FOR RMS/PRLA FAILURES (Cont):

RMS JOINT ALIGN [6]

IV If Joint Fail – reposition RMS as reqd for RMS rope attachment
– monitor EV1 and EV2

RMS JOINT ALIGN

TOOL BOX – ADJ TETHERS, SNATCH BLOCKS (2), RMS ROPE REEL

1. Attach RMS rope around end effector under handrail. Translate to avoid wrapping rope around RMS
2. Attach snatch block(s) to handrail(s) and route rope as reqd
3. Reposition RMS as required for cradling (**IV**)
4. Pull RMS down into MPMs
5. Perform final positioning by hand to allow MRLs to latch

NOT IN EV CUFF 39 03/20/06

IV When RMS ready to latch:

R13L PL BAY MECH PWR SYS (two) – ON

A8L RMS RETEN LAT – LAT (tb-LAT 18 sec max)
– OFF

If MPMs deployed:
√Elbow Camr in aligned posn:
Pan 90° from X-AXIS
Tilt per DECAL

A8L RMS – STO (tb-STO, 68 sec max)
– OFF

A8U BRAKES – ON (tb-ON)

R13L PL BAY MECH PWR SYS (two) – OFF

RMS SHOULDER BRACE RELEASE [7]

IV A8 √RMS SELECT – OFF

RMS SHOULDER BRACE RELEASE

TOOL BOX – RMS SHOULDER BRACE RELEASE TOOL

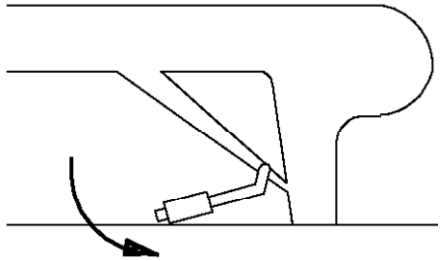

1. Fold aside rub strip and thermal blankets
2. Insert tool and move handle down
3. Remove tool and reconfigure blankets

NOT IN EV CUFF 39 03/20/06

FOR RMS/PRLA FAILURES (Cont):

RMS FLIGHT RELEASABLE GRAPPLE FIXTURE RELEASE 8

RMS FLIGHT RELEASABLE GRAPPLE FIXTURE RELEASE

AIRLOCK – JETTISON STOWAGE BAG
TOOL BOX – 1/2-in BOX RATCHET, VELCRO/TAPE

EV
1. Rotate white release rod ccw to hard stop (32 strokes of 90 deg)
2. Rotate black release rod cw to hard stop (32 strokes of 90 deg – shaft will release from grapple fixture)
3. Clear worksite for RMS powerdown
4. Tape end of shaft to restrain slug within shaft
5. Cover end effector with jettison stowage bag to restrain grapple shaft

NOT IN EV CUFF 42 03/20/06

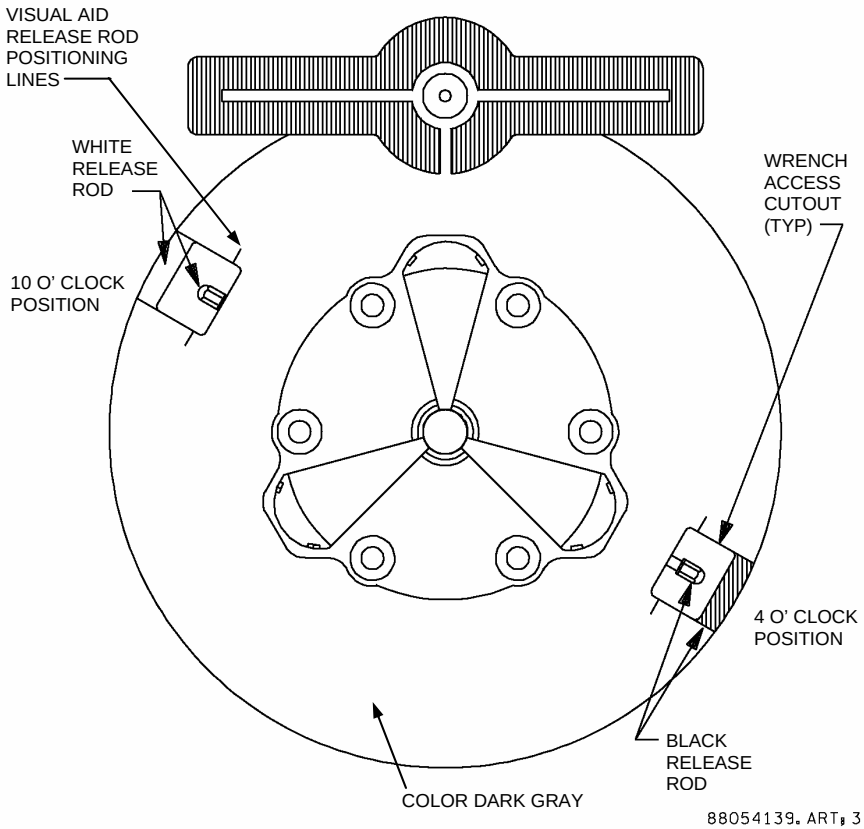

EFGF GRAPPLE SHAFT RELEASE

Tools Reqd:
1/2-in Box Ratchet, EVA Probe (PSA), Jettison Stowage Bag (Airlock), Spare Grapple Shaft w/Transfer Bag (if reqd, Airlock)

EV 1. Perform visual inspection of EE/GF interface to determine possible cause of failure

2. Remove tee pull (~10 lb)

3. Rotate release rod cw (break out < 20 ft-lb, running < 11 ft-lb) to hard stop (~90 strokes of 70 deg)

WARNING
If payload not restrained, rotation of release rod after grapple shaft release may impart movements to payload

IV 4. √Electrical connector disconnected

EV 5. If electrical connector not disconnected, insert probe into connector release port ~5.25 in for full release

6. Clear worksite for RMS cradle

IV 7. Perform RMS POWERDOWN (PDRS OPS)

EV 8. Cover end effector with jettison stowage bag to restrain grapple shaft

SPARE SHAFT REPLACEMENT (If reqd)

EV 9. Rotate release rod cw to hardstop then rotate ccw five strokes of ~70 deg (at least one full rev reqd). This will insure that grapple shaft can be released for future failures

10. Insert spare shaft (~5 lb to overcome ball detent) using alignment pin and guide

11. Rotate release rod ccw to hardstop (~90 strokes of ~70 deg), apply slight axial pressure to grapple shaft for initial rotations. This is required to aid in engagement of Acme threads

If grapple shaft not engaged after four revs of release rod, repeat steps 9-11

12. Verify no gap between grapple shaft shoulder and grapple fixture cone. If gap is visible, release shaft and repeat insertion procedures

13. Replace tee pull

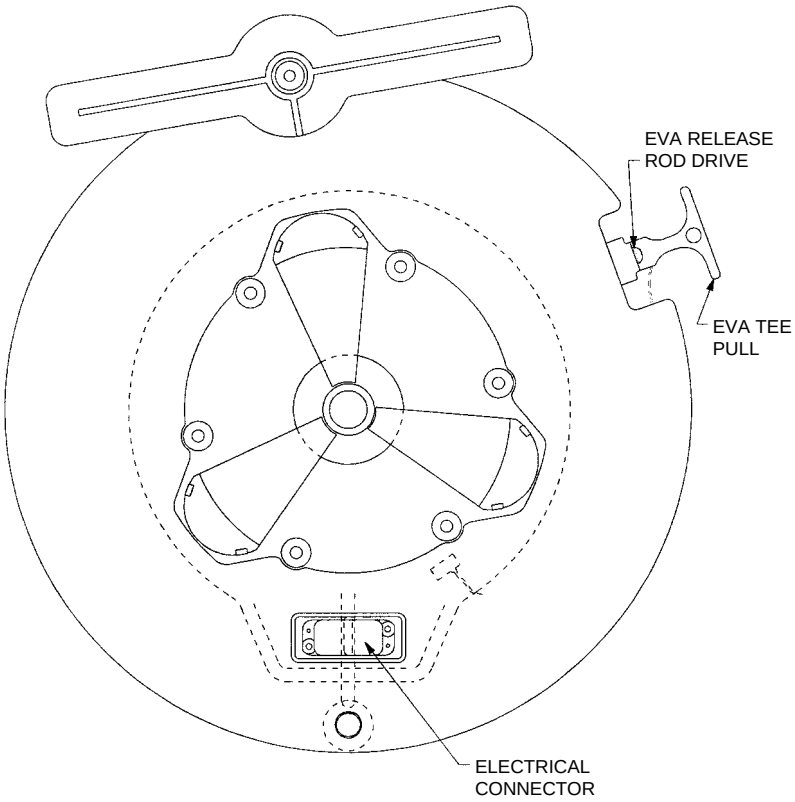

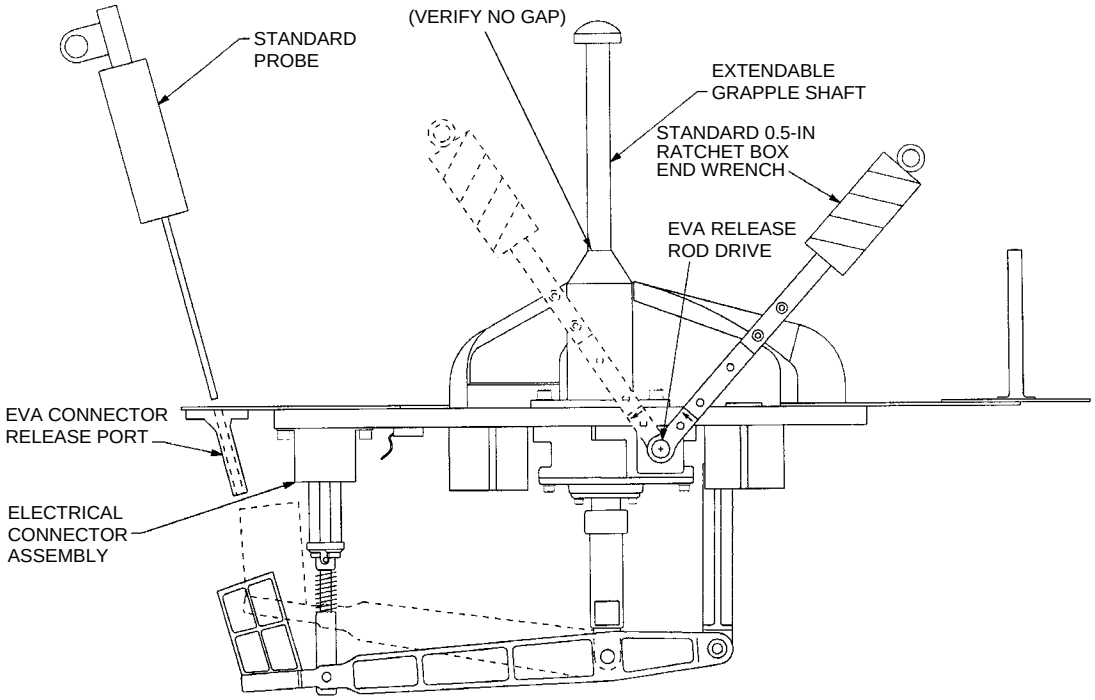

ELECTRICAL FLIGHT GRAPPLE FIXTURE

FOR RMS/PRLA FAILURES (Cont):

PRLA OPEN/CLOSE 9

Refer to EVA RELEASABLE PAYLOAD RETENTION LATCHES figures, 14-11, 14-12, as reqd

PRLA OPEN/CLOSE

AIRLOCK – RATCHET WITH 7/16 SOCKET

IV √PRLA PWR OFF

EV
1. Rotate ratchet in release direction (as marked above EVA drive) to shear pin
2. View yellow indicator as applicable
3. Continue to rotate drive 4-1/2 revs to disc gear train from drive shaft

To open latch:

4. Continue rotation in release direction (as marked above EVA drive) until latch open against stop

To close latch:

5. Rotate EVA drive in opposite direction of release (as marked above EVA drive) until latch closed against hardstop and over center

IV √PRLA tb LAT

Cont next page

NOT IN EV CUFF 43 03/20/06

PRLA OPEN/CLOSE (CONT)

EV
6. Apply PRLA locking feature if applicable

To lock:

7. Rotate each bolt (two) cw 1/2 turn

For subsequent PRLA ops, release locking feature before operating EVA drive (two bolts ccw 1/2 turn); relock after operation

NOT IN EV CUFF 44 03/20/06

IV MA73C:C cb MCA PWR AC1 3Φ MID 1 – cl
:D AC2 3Φ MID 3 – cl

To verify PL Latches op/cl:

A6U √PL RETEN LAT 1(2,3,4,5) tb – LAT(REL)

POST EVA RMS CONFIG 10

IV A8U √BRAKES – ON (tb-ON)

Complete RMS POWERDOWN (PDRS OPS)

RMS/PRLA CONTINGENCY EVA (Cont)

In-board end of shaft has yellow marks.
Not aligned indicates motor disengaged

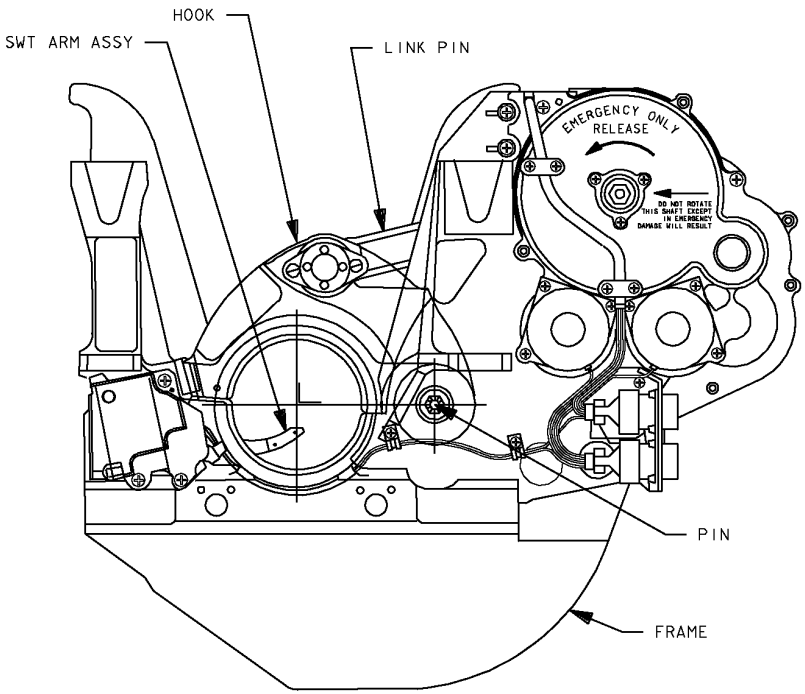

LWLL/MWLL/SMWLL

LIGHTWEIGHT LONGERON LATCH/
MIDDLEWEIGHT LONGERON LATCH/
SUPER MIDDLEWEIGHT LONGERON LATCH

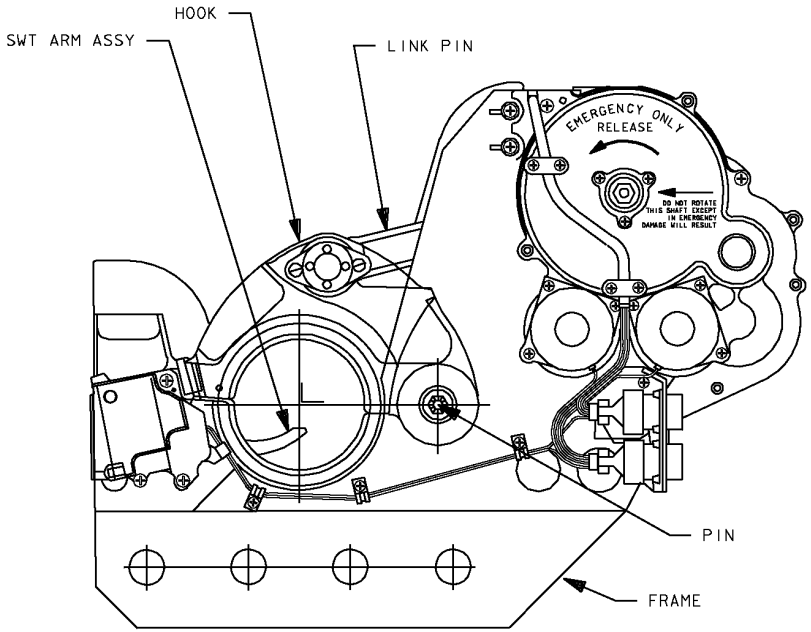

173253111.ART; 1

MMWL

MODIFIED MIDDLEWEIGHT LATCH

EVA RELEASABLE PAYLOAD RETENTION LATCHES

In-board end of shaft extends to show
yellow stripe when motor disengaged

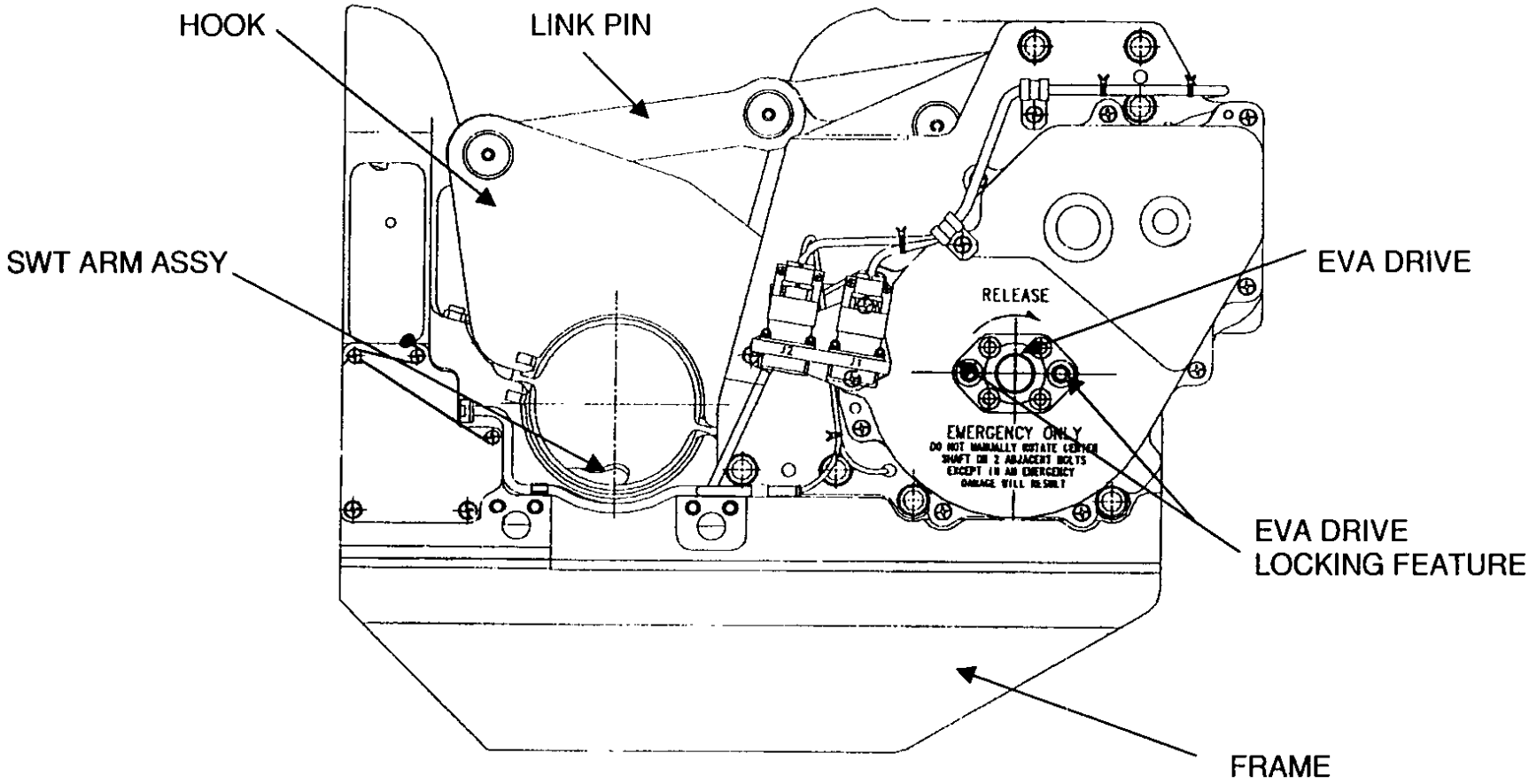

STANDARD WEIGHT LATCH

EVA RELEASABLE PAYLOAD RETENTION LATCHES (Cont)

96 BOLT PRE-EVA TOOL CONFIG

STOWAGE LOCATIONS AT LAUNCH
Flight specific Middeck stowage and PFR configuration will be uplinked

EMUs:
- MWS Baseplates (2)
- Retractable Tethers (2)
- Adj Equip Tethers (2)
- Waist Tethers (4)

Middeck:
- MWS T-bars (2)
- MWS Swing Arms (3)
- BRT (2)
- Waist Tethers Ext (2) (If flown)
- General Purpose (GP) Caddies (2)
- Adj Equip Tethers (2)
- Retractable Tethers (2)
- Crewlock Bag
- Right Angle Drive (RAD)
- Socket Caddy
- 6-in Exts (2)
- PGTs (2)
- PGT Batteries (3)
- Adj Fuse Tether
- Jettison Stowage Bag

Node Bag:
96 Bolt Bag:
- 7/16-in Box End Wrenches (2)
- ODS Clamps (2)
- ODS Clamp Handles (2)
- PB Articulating Socket
- Bridge Rail Clamp
- RAD w/7/16-in Sockets (2)

TSA (Port):
- Large Cutter
- PRDs (2)
- Sm EVA Trash Bags (2)

Fwd Bulkhead:
- PFR

Port PLB (Bay 2):
- Bridge Rail Clamp
- PB Articulating Socket

Configure Crewlock EVA Bag:
- PGT Spare Battery
- Socket Caddies w/6-in Exts (2), RAD (Spare)

Configure Adj Fuse Tether with one of following:
- GP Caddies (2)
- PGTs w/Batteries (2)

Stow Adj Fuse Tether, Crewlock Bag, Jettison Stowage Bag in Airlock pre-EVA

Remove ODS Centerline Camera pre-EVA

96 BOLT EVA TIMELINE

PET	IV/RMS	EV1	EV2
-40:00	√DOCKING MECHANISM POWERDOWN (RNDZ, APDS) before start of DEPRESS ML86B:D 1. cb MNA MMU GN2 SPLY ISOL VLV A – cl R13L 2. MMU GN2 SPLY ISOL VLV A – CL (tb-CL) ML86B:D 3. cb MNA MMU GN2 SPLY ISOL VLV A – op		
-00:25		1. Perform DEPRESS (DEPRESS/REPRESS)	2. Perform DEPRESS (DEPRESS/REPRESS)
-00:20	Confirm TCS powerdown		
00:00	MET at PWR – BATT _____/_____:_____	3. Perform POST DEPRESS (DEPRESS/REPRESS)	4. Perform POST DEPRESS (DEPRESS/REPRESS)
00:15		5. Perform AIRLOCK EGRESS (CUFF C/L, 47) Add the following steps to AIRLOCK EGRESS:	6. Perform AIRLOCK EGRESS (CUFF C/L, 47) Add the following steps to AIRLOCK EGRESS:
00:30	AW64L(E) GN2 XFER PANEL GO2 XFER PANEL	6a. Translate to GO2 ISOLATION VALVE on outside of airlock (aft port side) 6b. Open thermal cover; remove PIP pin 6c. GO2 XFER ISO VLV – CL AW64L(E) 6d. Re-install PIP pin; close thermal cover	6e. √ODS hatch ΔP < 0.5 6f. Open ODS Hatch per decal 6g. Remove docking lights (two): Release elec connector (one) at each light PIP pin (one) on each light boom; stow in bag 6h. Remove Cross-Hair assembly; stow in bag 6i. VENT – OP; FLOW – OP GN2 XFER PANEL 6j. VENT – OP; FLOW – OP GO2 XFER PANEL 6k. √Pressure gauges (two) – zero 6l. Close ODS hatch per decal 6m. √ODS Equal vlvs (two) capped

96 BOLT EVA TIMELINE (Cont)

PET	IV/RMS	EV1	EV2
01:00		PAYLOAD BAY SETUP 1. Retrieve 96 Bolt Bag from Node Bag 2. Attach 96 Bolt Bag to Ext A/L Truss near port TSA 3. Remove thermal blanket covering ODS bolts; temp stow in A/L with Adj Equip Tether 4. Retrieve GP Caddy from Adj Fuse Tether; attach to MWS	PAYLOAD BAY SETUP 1. Retrieve following items from port TSA: PRDs (2) Large Cutter 2. Close and latch TSA door 3. Temp stow PRDs (two) on Truss 4. Temp stow Large Cutter on stbd ODS using Adj Equip Tether 5. Retrieve Adj Fuse Tether from A/L; temp stow on Truss 6. Remove thermal blanket covering ODS bolts; temp stow in A/L with Adj Equip Tether 7. Retrieve GP Caddy from Adj Fuse Tether; attach to MWS
		TOOL CONFIG 1. Retrieve Right Angle Drives from 96 Bolt Bag and meet EV2 at Adj Fuse Tether 2. Retrieve ODS Clamp and Handle from 96 Bolt Bag; install handle in clamp, √locked; hand off to EV2	TOOL CONFIG 1. Translate to Adj Fuse Tether, wait for EV1 2. Configure PGTs (two) with Right Angle Drives using RET w/pip pin or pip pin in 96 Bolt Bag
01:20		3. Retrieve ODS Clamp and Handle from 96 Bolt Bag; install handle in clamp; √locked; attach Waist Tether from EMU to ODS Clamp 4. Retrieve 7/16-in Box End Wrench from 96 Bolt Bag; attach to GP Caddy CAUTION During clamp installation, do not apply any sideload on ODS gusset (may puncture A/L)	3. Retrieve ODS Clamp from EV1, attach Waist Tether from EMU to ODS Clamp 4. Retrieve 7/16-in Box End Wrench from 96 Bolt Bag; attach to GP Caddy CAUTION During clamp installation, do not apply any sideload on ODS gusset (may puncture A/L)
	PGT: 25.5 ft-lb, CCW2, 30.5	INSTALL CLAMP – STBD 1. Tether ODS Clamp to handrail at worksite 2. Release bolts 35 to 38 (four); pull to lock up 3. Retract Clamp pip pin 4. Install clamp between bolts 36,37 5. Set clamp Turn bolt at top of clamp until upper jaws contact vestibule ring, then add'l 3/4 turn; insert pip pin	INSTALL CLAMP – PORT 1. Tether ODS Clamp to handrail at worksite 2. Release bolts 83 to 86 (four); pull to lock up 3. Retract Clamp pip pin 4. Install clamp between bolts 84,85 5. Set clamp Turn bolt at top of clamp until upper jaws contact vestibule ring, then add'l 3/4 turn; insert pip pin
01:45		6. √Clamp Handle locked	6. √Clamp Handle locked

96 BOLT EVA TIMELINE (Cont)

PET	IV/RMS	EV1	EV2
		IF PFR REQUIRED: 1. Retrieve Art Socket and Bridge Rail Clamp from 96 Bolt Bag 2. Install bridge rail clamp and art socket on stbd bridge rail in aft-most available half-hole, knob inboard 3. Retrieve PFR from port side PFR SETUP FOR CLAMP INSTALL 1. Art Socket: P = 2, Y = 6 2. PFR: P = 10, R = A, Y = 8	IF PFR REQUIRED: Port Bridge Rail Clamp and Art Socket launched in second to fwd-most available half-hole 1. Move clamp assy to fwd-most available half-hole, knob inboard 2. Retrieve fwd bulkhead PFR and install PFR SETUP FOR CLAMP INSTALL 1. Art Socket: P = 1, Y = 6 2. PFR: P = 10.5, R = A, Y = 3
02:05	Record Cables cut at following locations: Bolt 32 – 1 cable _____ Bolt 24 – 7 cables _____ Bolt 21 – 1 cable _____ Bolt 19 – 1 cable _____ Bolt 1 – 1 cable _____ Bolt 95 – 2 cables _____ Bolt 74 – 2 cables _____ Bolt 69 – 3 cables _____ Line 69 – 1 line N2 _____ Line 66 – 1 line O2 _____ Bolt 51 – 1 cable _____ Bolt 47 – 2 cables _____	WARNING Cut ends of O2 and N2 lines present sharp edge hazard	WARNING Cut ends of O2 and N2 lines present sharp edge hazard CUT CABLES AND LINES 1. Use Large Cutter to cut all cables at 96 bolt interface 2. Bend cables w/cutter to verify cables separated 3. Cut O2 and N2 lines 4. Stow Large Cutter on available handrail
	PGT: 25.5 ft-lb, CCW2, 30.5	USE BRT FOR BOLT RELEASE 1. Release bolts 1-33, 40-48 and grounding strap between bolts 9 and 10	USE BRT FOR BOLT RELEASE 1. Release bolts 49-81, 88-96
03:15		SURVEY VESTIBULE 1. √All bolts except 34,39,82,87 locked up 2. √All cables cut (21), all gas lines cut (two), and ground strap removed 3. √All tools, tethers removed from vestibule 4. √Separation plane clear of all cables and lines	SURVEY VESTIBULE 1. √All bolts except 34,39,82,87 locked up 2. √All cables cut (21), all gas lines cut (two), and ground strap removed 3. √All tools, tethers removed from vestibule 4. √Separation plane clear of all cables and lines

96 BOLT EVA TIMELINE (Cont)

PET	IV/RMS	EV1	EV2
03:25	√FREE DRIFT PGT: 25.5 ft-lb, CCW2, 30.5	PREP FOR RELEASE 1. Receive PRD from temp stow on Truss 2. Attach PRD fixed end to handrail, retractable end to Clamp Handle 3. Before releasing last two bolts, √FREE DRIFT 4. Release bolts 34,39; pull to lock up 5. Notify IV, GO for Clamp Release	PREP FOR RELEASE 1. Receive PRD from temp stow on Truss 2. Attach PRD fixed end to handrail, retractable end to Clamp Handle 3. Before releasing last two bolts, √FREE DRIFT 4. Release bolts 82,87; pull to lock up 5. Notify IV, GO for Clamp Release
03:50	Give EV GO for Clamp Release	CLAMP RELEASE 1. Retract Clamp Handle pip pin; √green stripe visible CAUTION Posn body below separation plane for clamp release During clamp release, do not apply any sideload on ODS gusset (may puncture A/L)	CLAMP RELEASE 1. Retract Clamp Handle pip pin; √green stripe visible CAUTION Posn body below separation plane for clamp release During clamp release, do not apply any sideload on ODS gusset (may puncture A/L)
04:00		2. Coordinate with IV and give EV2 short count for simo release 3. Simo with EV2, pull on PRD strap to open clamp 4. After clamp open, inform IV, “Clamp open and EV1 clear”	2. Simo with EV1, pull on PRD strap to open clamp 3. After clamp open, inform IV, “Clamp open and EV2 clear”
04:05	SEPARATION BURN	CLEANUP 1. Translate to TSA w/96 Bolt Bag Remove Right Angle Drives (two) from PGTs (two) using pip pin on 96 Bolt Bag; stow in 96 Bolt Bag 2. Remove ODS Clamp and Handle from ODS gusset; stow Clamp, Handle, 7/16-in Box End Wrench in 96 Bolt Bag 3. Stow Waist Tether on EMU 4. Remove and stow 96 Bolt Bag in airlock 5. Stow PRD, Trash Bag in Port TSA IF USED: 6. Configure stbd PFR assy for landing: Bridge Rail Clamp: second to aft-most available half-hole; √knob locked 7. Art Socket: P = 11.5, Y = 3; √locked 8. PFR to EV2 port side	CLEANUP 1. Translate to TSA 2. Stow PGTs (two) on Adj Fuse Tether 3. Stow Adj Fuse Tethers in airlock 4. Remove ODS Clamp and Handle from ODS gusset; stow Clamp, Handle, 7/16-in Box End Wrench in 96 Bolt Bag 5. Stow Waist Tether on EMU 6. Stow Large Cutter, Trash Bag, PRD in Port TSA 7. Close TSA door, close all latches IF USED: 8. Configure port PFR socket assy for landing: Bridge Rail Clamp: second to fwd-most available half-hole; √knob locked 9. Art Socket: P = 11.5, Y = 3; √locked 10. PFR: P = 10, R = A, Y = 6; √locked

96 BOLT EVA TIMELINE (Cont)

PET	IV/RMS	EV1	EV2
04:40		VERIFY 96 BOLT BAG STOWAGE ODS Clamps (2) ODS Clamp Handles (2) Right Angle Drives with 7/16-in Socket (2) 7/16-in Box End Wrenches (2)	VERIFY AIRLOCK STOWAGE Adj Fuse Tethers PGTs w/batteries (2) GP Caddies (2) ODS Thermal Blankets with Adj Equip Tethers (2) 96 Bolt Bag Crewlock Bag: PGT spare battery Socket Caddy w/6-in Exts (2), RAD
05:15		PERFORM AIRLOCK INGRESS, CUFF C/L, 30 √EMU equipment: MWS w/swing arm BRT Retractable Tethers (2) Adj Equip Tethers (2) Waist Tethers (2)	PERFORM AIRLOCK INGRESS, CUFF C/L, 30 √EMU equipment: MWS w/swing arm BRT Retractable Tethers (2) Adj Equip Tethers (2) Waist Tethers (2)
05:30			

CAPTURE LATCH MANUAL RELEASE (ODS/PMA)

IV	EV
If APDS powered: A7 pb PWR OFF – push √STATUS It (eighteen) – off Perform DOCKING MECHANISM POWERDOWN (RNDZ, APDS)	TOOLS REQD Jettison Stowage Bag Russian Capture Latch Tool (if reqd, in Node Bag)
	BOTH 1. Configure Waist Tethers as safety line inside ODS
	EV1 Attach at ODS Hatch D-ring nearest capture latches
	EV2 Attach at A/L D-ring behind EV1
	EV2 2. Open outer hatch to improve EMU sublimator performance
	EV1 3. ODS/PMA interface: Open ODS hatch Remove docking lights (two): Release elec connector (one) at each light pip pin (one) on each light boom Stow lights and booms in bag
	NOTE EV2 restrain/aid EV1 as reqd
	EV1 4. Remove Cross-Hair assembly Stow in bag
	5. √IV GO for release
	6. Release capture latch
Cont next page	Cont next page

CAPTURE LATCH MANUAL RELEASE (ODS/PMA) (Cont)

IV	EV
	NOTE If reqd, EV2 retrieve Russian Capture Latch Tool from Node Bag (requires safety tether reel ops)
	7. Notify IV when capture latch released
	8. Close hatch at capture latch interface
	EV2 9. If used, temp stow Russian Capture Tool in A/L and perform AIRLOCK INGRESS (CUFF C/L, 30)
	10. Close outer hatch
	BOTH 11. Go to A/L REPRESS

I

96 BOLT EVA LAYOUT

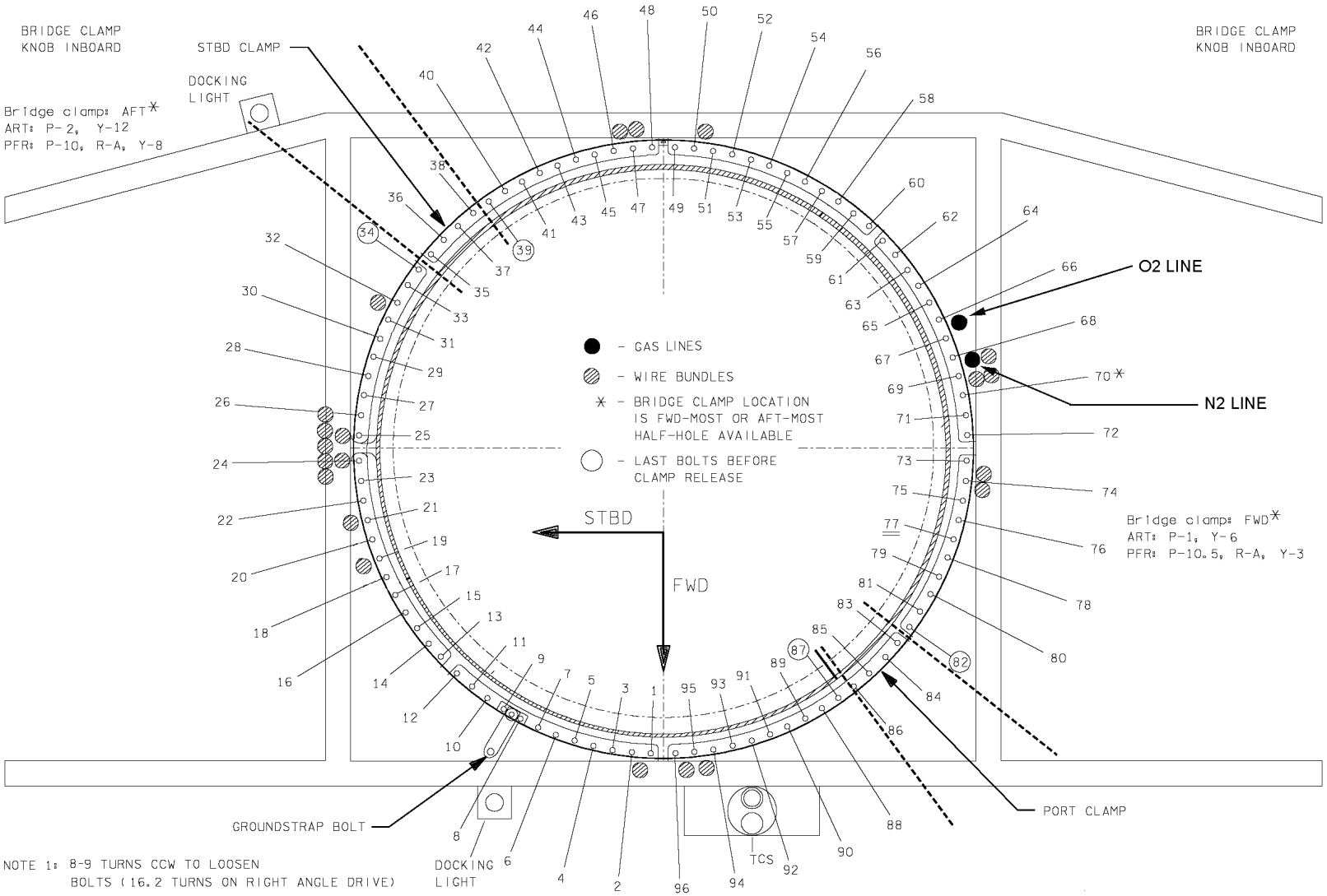

PLBD LATCH TOOL PLACEMENT WITH DUAL LATCH GANG FAILURES

CASE*	FAILED GANG 1	FAILED GANG 2	Three Point Latch Tool Positions Cuff C/L, 37		Centerline Latch Tool Positions Cuff C/L, 38	
A	Fwd Bulkhead Port	Fwd Bulkhead Stbd	FWD #2**	FWD #4**	-	-
B	Fwd Bulkhead Port	Centerline Fwd	FWD #2	FWD #4	CL #1	CL #2
C	Fwd Bulkhead Stbd	Centerline Fwd	FWD #2	FWD #4	CL #1	CL #2
D	Centerline Fwd	Centerline Mid Fwd	-	-	CL #5	CL #6
E	Centerline Mid Fwd	Centerline Mid Aft	-	-	CL #7	CL #8

*Other combinations of Two-Gangs Out involve doors in the crush pressure zone (latches in compression) or have at least one closed gang between failed gangs (no tension loads bleeding between gangs, giving load distributions identical to single latch gang failures)

**Install both 3-pt tools on same side (Port or Stbd)

EVA CUFF CHECKLIST

NORMAL EVA STATUS 15-2
DCM CONFIGURATION 15-2
EMU MALFUNCTION INDEX 15-2
DECOMPRESSION SICKNESS (DCS) 15-3
DECOMPRESSION SICKNESS (DCS) (CONT) 15-3
ABORT EVA 15-3
TERMINATE EVA 15-3
SUIT P EMERG 15-4
SOP O2 ON 15-4
BATT AMPS HIGH 15-4
BATT V DECAY OR BATT VDC LOW 15-4
SUIT P LOW 15-5
SUIT P HIGH 15-5
SOP P LOW 15-5
O2 USE HIGH 15-5
SUBLM PRESS 15-6
H2O GP LOW 15-6
RESRV H2O ON 15-6
H2O WP HIGH 15-6
NO VENT FLOW 15-7
CO2 HIGH OR MONITOR CO2 15-7
CO2 SNSR BAD 15-7
COMM FAILURE 15-7
AIR FLOW CONTAMINATION 15-8
LOSS OF COOLING 15-8
RLF V FAIL 15-8
MISC MSGS 1 15-8
MISC MSGS (CONT)/TIME LF 15-9
AIRLOCK LATCH DISCONNECT 15-9
AIRLOCK INGRESS 15-9

FOLLOWING PAGES NOT IN EV CUFF

RADIATOR ACTUATOR DISCONNECT 15-9
PLBD DRIVE CUT 15-10
DOOR DRIVE RESTRAINT 15-10
DOOR DRIVE DISCONNECT 15-10
WINCH OPERATIONS 15-10
WINCH OPERATIONS (CONT) 15-11
3-PT TOOL INSTALLATION 15-11
CL LATCH TOOL 15-11
RMS JOINT ALIGN 15-11
MPM STOW/DEPLOY 15-12
RMS TIEDOWN 15-12
RMS FLIGHT RELEASABLE GRAPPLE FIXTURE RELEASE 15-12
PRLA OPEN/CLOSE 15-12
PRLA OPEN/CLOSE (CONT) 15-13
KU ANTENNA STOW 15-13
KU ANTENNA STOW (CONT) 15-13
AIRLOCK EGRESS 15-13

NORMAL EVA STATUS

DCM CONFG INDEX

O2 POS	EVA
SUBLM P	2.0-4.2 psia
TIME EV	HR:MIN since PWR-BATT
TIME LF/ limit consum	HR:MIN remaining at present use rate
% O2 (PWR) LF	Non-limiting consumable will be displayed
SUIT P	4.2-4.4 (4.7 during/after depress) psid
O2 P	150-900 psia
O2 RATE	0-4.0 psi/minute
SOP P	5410-6800 psia
BAT VDC	≥ 16.7
BAT AMP	3.0-4.0
RPM	18.0-20.0 K
CO2	0.2-4.0 mm
H2O TEMP	32-75 degF
H2O GP	14.0-16.0 psid
H2O WP	14.0-16.0 psid
DATA?	COMBO
BATT	32.0 AH (as directed by MCC-H)
GAUGE	4.2-4.4 psid (4.7 during/after depress) psid

1 03/10/06

DCM CONFIGURATION

DCM CONFG INDEX

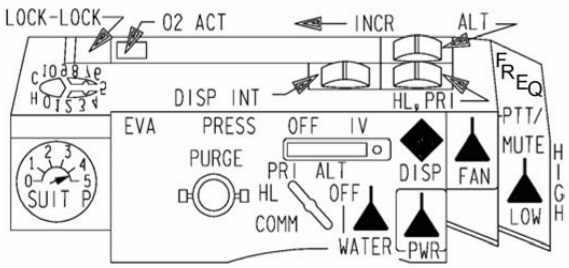

EVA COMM FREQUENCIES

LOW=414.2 MHz HIGH=417.1 MHz

2 08/01/05

EMU MALFUNCTION INDEX

DCS

14V SUP FAIL	27	O2 ACT FAULT	28
5V REF FAIL	27	O2 IS OFF	28
ABORT EVA	6	O2 LF (%)	28
AIR FLOW CONT	24	**O2 USE HIGH**	15
BATT AMPS HIGH	10	PWR LF (%)	28
BATT V DECAY OR BATT VDC LOW	11	**RESRV H2O ON**	18
BITE light	27	**RLF V FAIL**	26
BUS CK FAIL	27	SCU PWR AVAL	28
COMM FAIL	23	SET H2O OFF	28
CO2 HIGH	21	SET O2 EVA	28
CO2 SNSR BAD	22	SET O2 PRESS	28
DCS	4	**SOP O2 ON**	9
DRAM FAIL	27	**SOP P LOW**	14
EE CSUM FAIL	27	**SUBLM P**	16
FAN SW OFF	28	**SUIT P EMERG**	8
FW ANOMALY	27	**SUIT P HIGH**	13
H2O GP LOW	17	**SUIT P LOW**	12
H2O IS OFF	28	SW/FAN FAIL	27
H2O WP HIGH	19	**TERMINATE EVA**	7
LOSS OF COOLING	25	TIME LF: XX	28
MONITOR CO2	21	VENT SW FAIL	27
NO VENT FLOW	20	**WAT DOG FAIL**	27

NOTE: **BOLDFACE** ind detailed proc

3 05/11/06

DECOMPRESSION SICKNESS (DCS)

Class 1

Symptoms: Mild pain (single/multiple sites) and/or single extremity numbness/tingling. Difficult to discern from suit pressure points. Symptoms do not interfere with performance

Action: Report in POST EVA PMC

DCS

Class 2

Symptoms: Moderate Class 1 symptoms that interfere with performance or symptoms that resolve upon repress

Action: Perform worksite cleanup, minimize activity of affected crewmember. TERM EVA; REPRESS

4 01/18/05

DECOMPRESSION SICKNESS (DCS) (CONT)

Class 3

Symptoms: Severe Class 1 symptoms or migratory, trunkal/multiple site numbness/tingling; unusual headache

Action: Assist affected crewmember to A/L, safe PLB, TERM EVA; REPRESS

Class 4

Symptoms: Serious symptoms – central neurological, cardiopulmonary

Action: ABORT EVA. Assisted return of affected crewmember to A/L, repress affected crewmember solo. Unaffected crewmember safe PLB, TERM EVA; REPRESS

ABORT EVA
TERM EVA

5 01/18/05

ABORT EVA

BOTH: Ingress airlock.
Unhook from reel
Outer (EVA) hatch – close and lock
Go to EMER REPRESS decal (airlock hatches)

ABORT EVA
TERM EVA

6 07/20/97

TERMINATE EVA

1. Ingress airlock
2. Connect SCU

WARNING
If terminating due to BATT AMPS HIGH (system short), do not perform step 3

AW18H 3. PWR/BATT CHGR EMU 1(2) BUS SEL – MNA(MNB)
IV 4. √EMU O2 ISOL vlv – OP
AW82B 5. √EV-1(EV-2) O2 vlv – OP

NOTE
If fan stops during power transfer:
Cycle FAN sw – OFF,ON

DCM 6. PWR – SCU (fwd)
7. WATER – OFF (fwd)
8. Verify SUIT P ≥ 3.3 and stable
If SUIT P < 3.3:
9. Go to ABORT EVA, 6
10. Monitor EMU status
11. Coordinate ingress with EV1(2)

SUIT P EMERG
SOP ON

7 04/28/06

SUIT P EMERG

SUIT P EMERG	CLOSE PURG V	SUIT P X.X

If Suit P gauge ≤ 4.0
1. √DCM PURGE vlv – closed
   √Helmet purge vlv – closed and locked
   √O2 ACT – EVA
2. Go to ABORT EVA, 6 >>

If Suit P gauge > 4.0 (sensor failed)
3. Continue EVA, monitor Suit P gauge

NOTE
Message triggered when SUIT P < 3.1

SUIT P EMERG / SOP ON

8 04/28/06

SOP O2 ON

SOP O2 ON	TIME LF XX:XX

1. Go to ABORT EVA, 6

NOTE
Msg triggered when:
SUIT P < 4.05 and
SOP RATE > 36.0 psi/min

BATT AMPS / BATT VOLTS

9 05/11/06

BATT AMPS HIGH

BATT AMPS / BATT VOLTS

BAT AMPS HI	BAT AMPS X.X

1. Helmet purge vlv – op
2. FAN – OFF

If BAT AMP w/o fan > 1.3 (system short):
3. WATER – OFF
4. Notify IV/EV of impending comm loss
5. PWR – SCU, do not activate airlock power
6. Go to TERM EVA, 7 >>

If BAT AMP w/o fan 0.7-1.3 (fan short):
7. Go to TERM EVA, 7

NOTE
Msg triggered when BATT AMPS > 5.0
Normal BAT AMP = 3.0-4.0
Normal BAT AMP w/o fan = 0.7-1.3

10 05/11/06

BATT V DECAY OR BATT VDC LOW

BAT VDC DECAY	BAT VDC XX.X

Or

BAT VDC LOW	BAT VDC XX.X

If BAT VDC < 13.0 and fan and communications still working:
1. Continue EVA (sensor failure) >>

Otherwise (battery failure)

WARNING
Impending fan and comm loss

2. Begin translating to Airlock for Terminate EVA
3. When vent flow lost, helmet purge vlv → op
4. Go to TERM EVA, 7

NOTE
BATT V DECAY message triggered when BATT VDC < 17.5
BATT VDC LOW message triggered when BATT VDC < 16.5
Normal Lithium Ion BATT VDC ≥ 18.0
Normal ICB BATT VDC ≥ 16.7
Normal Fan RPM: 19.0 to 20.0K

SUIT P LOW / SUIT P HIGH

11 05/11/06

SUIT P LOW

SUIT P LOW	SUIT P X.X

If O2 USE HIGH msg present:
1. Go to ABORT EVA, 6 >>

If O2 USE HIGH msg not present:
2. Continue EVA, monitor SUIT P, SOP P, and gauge
   If gauge < 4.0 and SOP P decreasing:
   3. Go to TERM EVA, 7

NOTE
Msg triggered when SUIT P < 4.05

SUIT P LO / **SUIT P HI**

12 05/11/06

SUIT P HIGH

SUIT P HIGH	O2 RATE XX.X	SOP RATE XXX

If O2 RATE > 7.0 or SOP RATE > 8:
1. Go to TERM EVA, 7 >>

If O2 RATE < 7.0 and SOP RATE ≤ 8:
2. Monitor SUIT P, SOP P, and gauge
3. Continue EVA

NOTE
Msg triggered when SUIT P > 4.55
Normal O2 RATE ≈1.7 psi/min

SOP LOW / **O2 USE**

13 05/11/06

SOP P LOW

SOP P LOW	SOP P XXX0	SOP RATE XXX

1. Go to TERM EVA, 7

NOTE
Msg triggered when SOP P < 4500, or SOP P < init SOP P – 600 (SOP P initialized at EMU powerup)

SOP LOW / **O2 USE**

14 05/11/06

O2 USE HIGH

O2 USE HIGH	O2 RATE XX.X

If SUIT P LOW msg present:
1. Go to ABORT EVA, 6 >>

If O2 P erratic or ~0:
2. Continue EVA
3. Recharge O2 periodically >>

If O2 RATE > 7.0:
4. Go to TERM EVA, 7 >>

Otherwise:
5. Recharge O2 as reqd
6. Continue EVA

NOTE
Msg triggered when:
O2 RATE > 10.2 psi/min <u>or</u>
O2 P < 150 and TIME EV < 5 hr
Normal O2 RATE ≈1.7 psi/min

SUBLM PRESS / **H2O GP**

15 05/11/06

SUBLM PRESS

SUBLM P XX.X | **SET H2O OFF**

1. √WATER – OFF (fwd)
   If SUBLM P < 1.0 and stable:
   - When cooling desired, then:
   - 2. Temp control vlv – Max H
   - 3. WATER – ON (aft)
   - 4. Temp control vlv – as reqd
     - If cooling insufficient:
       - 5. Go to LOSS OF COOLING, 25, step 2 >>
     - If cooling sufficient:
       - 6. Continue EVA, monitor SUBLM P and cooling >>

   If SUBLM P ≥ 1.0 and stable (sensor fail):
   7. Perform steps 2-4, continue EVA, monitor cooling

NOTE
Msg triggered when SUBLIM P < 1.5 or > 5.3
Normal SUBLM P = 2.0-4.2

SUBLM PRESS / **H2O GP**

16 05/11/06

H2O GP LOW

RSRV H2O / **H2O WP**

H2O GP LOW

If H2O WP < 13.5:
- If cooling insufficient (H2O reg fail):
  - 1. Go to LOSS OF COOLING, 25, step 2
- If cooling sufficient (H2O reg shifted):
  - 2. Monitor cooling
  - 3. Continue EVA >>

If H2O WP ≥ 13.5 (sensor fail):
4. Monitor H2O WP (RESRV H2O ON msg may be inhibited)
   If H2O WP drops to < 12.0:
   5. Go to TERM EVA, 7

NOTE
Msg triggered when H2O GP < 13.5
Normal H2O TEMP = 32-75 degF
WP = 14.0-16.0

17 05/11/06

RESRV H2O ON

RSRV H2O / **H2O WP**

RESRV H2O ON | **TIME LF :XX**

H2O GP	H2O WP	ACTION
~15	~0	1. Monitor SUBLM P and H2O TEMP (WP xdcr fail)
> 17.0	~15	2. Monitor H2O WP and H2O TEMP (GP xdcr fail) If H2O WP drops to < 12.0: 3. Go to TERM EVA, 7
~15	< 12.0	4. Go to TERM EVA, 7 (reserve H2O on)

NOTE
Msg triggered when GP minus WP > 2.1 psi
Normal SUBLM P = 2.0-4.2 psia
H2O TEMP = 32-75 degF
GP/WP = 14.0-16.0

18 05/11/06

H2O WP HIGH

H2O WP HIGH | **H2O WP XX.X**

If H2O GP < 16.0 (H2O WP sensor failed):
- 1. Monitor cooling (RESRV H2O ON msg inhibited)
- 2. Continue EVA >>

If O2 RATE > 7.0 (H2O reg failed open):
- 3. Go to TERM EVA, 7 >>

If O2 RATE ≤ 7.0 (H2O reg shifted):
- 4. Monitor Suit P gauge and cooling
- 5. Continue EVA

NO VENT / **CO2**

NOTE
Message triggered when H2O WP > 17.0
Normal H2O WP and H2O GP: 14.0-16.0
Normal H2O TEMP: 32 to 75 degF
Normal O2 RATE ~ 1.7 psi/min
Normal Suit P: 4.2-4.4 psi

19 05/11/06

NO VENT FLOW

NO VENT FLOW

If fan is not running:
1. Cycle FAN sw – OFF,ON
   If fan restarts:
   2. Continue EVA >>
   If fan does not start:
   3. Helmet purge vlv – op
   4. Go to TERM EVA, 7 >>

If fan is running:
If RPM < 18.0 K:
5. Helmet purge vlv – op
6. Go to TERM EVA, 7 >>

If RPM ≥ 18.0 K:
7. Assess helmet CO2 level
8. Go to CO2 HIGH, 21, step 3

NOTE
Msg triggered when flow < 3.7 cfm
Normal vent flow = 6-8 cfm

NO VENT / CO2

20 05/11/06

CO2 HIGH OR MONITOR CO2

CO2 XX.X MM | **MONITOR CO2** – PPCO2 > 8.0 MM
1. Minimize physical activity
2. Assess physical condition then go to step 3 below

CO2 HIGH | **OPEN PURGE V** – PPCO2 > 12.4 MM
1. √DCM PURGE vlv – cl, √Helmet purge vlv – op

If symptoms noted prior to opening purge vlv:
2. Go to TERM EVA, 7 >>

If no symptoms noted (or inconclusive):
3. Close/open helmet purge vlv as reqd to assess physical condition for high CO2
   If symptoms noted:
   4. Helmet purge vlv – op
   5. Go to TERM EVA, 7 >>
   If no symptoms noted:
   6. Helmet purge vlv – cl, locked
   7. Monitor physical condition and PPCO2
   8. Continue EVA

NOTE
Normal PPCO2 = 0.2-4.0 MM
If Suit P sensor failed: MONITOR CO2: 3.0 MM, CO2 HIGH: 8.0 MM

CO2 SNSR / COMM FAIL

21 05/11/06

CO2 SNSR BAD

CO2 SNSR BAD
1. Periodically monitor physical condition (CO2 sensor failed)

If CO2 symptoms noted:
2. Helmet purge vlv – op
3. Go to TERM EVA, 7 >>
4. Continue EVA

NOTE
Message triggered when PPCO2 increases from nominal value to ≥ 40 MM in < 2 min.
Normal PPCO2: 0.2-4.0 MM

CO2 SNSR / COMM FAIL

22 05/11/06

COMM FAILURE

ALL 1. √Proper config, EMU and orbiter (Mode, Vol, Freq)
Perform following sequence until comm restored:
BOTH If EV cm hears intermittent sidetones/comm or no sidetones:
2. Clear structure to recover comm (signal blockage)
If unresolved:
3. Aff cm select ALT(PRI) (notify MCC)
IV If IV no comm with EV1 and EV2:
O6 4. IV select STRING 2(1)
ALL If unresolved:
5. Perform coordinated freq change
If unable to restore minimum of relay comm:
6. Go to TERM EVA, 7

AIR FLOW / LOSS COOL

23 05/11/06

AIR FLOW CONTAMINATION

AIR FLOW
LOSS COOL

If flow exiting helmet vent contaminated by caustic water or LiOH dust:

1. Helmet purge vlv – op
2. FAN – OFF
3. WATER – OFF

   If contamination still present:

   4. Go to ABORT EVA, 6 >>

   Otherwise:

   5. Go to TERM EVA, 7 >>

If excessive water in vent loop or helmet:

6. Contact MCC

NOTE
EMU water tanks hold ≈1 gal H2O

24 05/11/06

LOSS OF COOLING

1. Temp Control vlv – cycle 3 to Max C; leave in Max C

If cooling restored, continue EVA >>

2. Begin translation to airlock for TERM EVA

If SCU cannot be connected prior to overheating:

3. Helmet purge vlv – op, lock
4. If vent flow excessively hot:

DCM FAN – OFF

If helmet purge flow insufficient for cooling:

5. Helmet purge vlv – cl, lock
6. DCM purge vlv – op
7. Connect SCU to DCM
8. √FAN – ON

IV √EMU O2 ISOL vlv – OP

AW82B 9. √EV-1(2) O2 vlv – OP

If cooling sufficient:

10. √Helmet purge vlv – cl, locked
11. √DCM purge vlv – cl, locked

If cooling insufficient:

12. Perform steps 3-6
13. Go to TERM EVA, 7

RLF VLV
MISC 1

25 05/11/06

RLF V FAIL

RLF V FAIL	STOP DEPRESS	SUIT P X.X

AW82B 1. AIRLK DEPRESS vlv – CL
2. √Suit P gauge
3. Contact MCC

RLF VLV
MISC 1

NOTE
Message triggered when SUIT P > 5.7

26 05/11/06

MISC MSGS 1

FW ANOMALY	– Feedwater discretes in disagreement
SW/FAN FAIL	– Verify RPMs nominal
VENT SW FAIL	– Vent flow sensor unreliable

Built-In Tests

⊠ (BITE light illuminated) – may be accompanied by one of following messages:

14V SUP FAIL
5V REF FAIL
BUS CK FAIL
DRAM FAIL
EE CSUM FAIL
WAT DOG FAIL

For all cases, perform following sequence:

1. √STATUS, IV record

If status list nominal:

2. Continue EVA, inform MCC >>

If status list unreadible or erroneous

3. Go to TERM EVA, 7
4. Inform MCC

MISC 2
A/L DISC

27 05/11/06

MISC MSGS (CONT) / TIME LF

MISC 2

A/L DISC

FAN SW OFF
H2O IS OFF
O2 ACT FAULT
O2 IS OFF
SET H2O OFF
SET O2 EVA
SET O2 PRESS
SCU PWR AVAL

Verify proper config

Consumables

XX% O2 LF	TIME LF 'MM
XX% PWR LF	TIME LF 'MM

Triggered with 30 min of calculated time remaining for for limiting consumable

1. Contact MCC to confirm calculation

* If no comm with MCC: *
* Go to TERM EVA, 7 *

28 05/11/06

AIRLOCK LATCH DISCONNECT

TOOL BOX/A/L – ADJ WRENCH, RATCHET WITH 7/16 SOCKET
TOOL BOX – EVA TRASH BAG, ADJ TETHERS

1. Remove bolt A, stow in trash bag
2. Rotate actuator handle

If no rotation – jammed actuator:

3. Force latches open
4. Seal hatch w/repress and secure for ldg (IV)

If free rotation – jammed latch:

5. Locate and remove jam
6. Reconnect actuator

HINGE DISCONNECT

TOOL BOX – ADJ TETHERS, VELCRO/TAPE

1. Remove hinge PIP pins, as reqd
2. Restrain hinge arm(s) and PIP pins clear of opening, ingress airlock, posn hatch for closing
3. Close, lock hatch

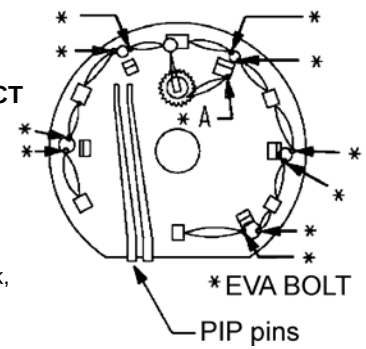

A/L INGR

29 05/11/06

AIRLOCK INGRESS

1. √TOOL BOX – closed, latched
EV2 2. Ingress airlock
3. Attach waist tether to A/L internal D-ring; lock hook
EV1 4. Attach EV2's safety tether, retracting end to waist tether; lock hooks
5. Disconnect EV1 safety tether, retracting end – attach to self
6. Ingress airlock
BOTH 7. Unstow SCU, remove DCM cover, connect SCU to DCM (not reqd for tunnel adapter)
8. DCM WATER – OFF (fwd)
9. Thermal cover – close

> CAUTION
> Do not close hatch until EMU WATER is OFF for 2 min

10. EVA hatch handle – pre close posn
11. √EVA hatch seal clear, outer (EVA) hatch – close, lock
12. Go to PRE REPRESS (DEPRESS/REPRESS Cue Card)

30 11/03/06

RADIATOR ACTUATOR DISCONNECT

IFM – 1/4-in ALLEN HEAD DRIVER
TOOL BOX – RADIATOR DISCONNECT/ 3/8 DRIVE RATCHET

IV √Pwr off
Actuator disc sequence – aft to fwd
1. Yellow shear pins (4) – retract to stop (6 revs ccw)
When all actuators are disengaged:
2. Manually close radiator panels and hold

IV √Pwr on
IV Latches – close

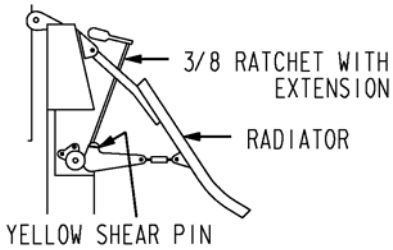

NOT IN EV CUFF 31 03/20/06

PLBD DRIVE CUT

TOOL BOX – TUBE CUTTER, VELCRO/TAPE

IV √Pwr off

Cut #1, stow antenna if stbd side, perform WINCH OPS, 35, steps 1,2, then cut #6 thru #2 and perform WINCH OPS, 36, steps 3-7

BANDS VISIBLE	CORRECTIVE ACTION
1-6	Cut upper rod in middle and restrain (27)
7-10	Cut lower rod between 2nd and 3rd bands from top and restrain (27)

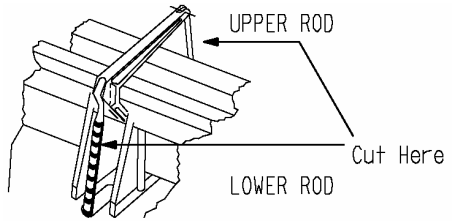

NOT IN EV CUFF 32 05/11/06

DOOR DRIVE RESTRAINT

TOOL BOX – TAPE

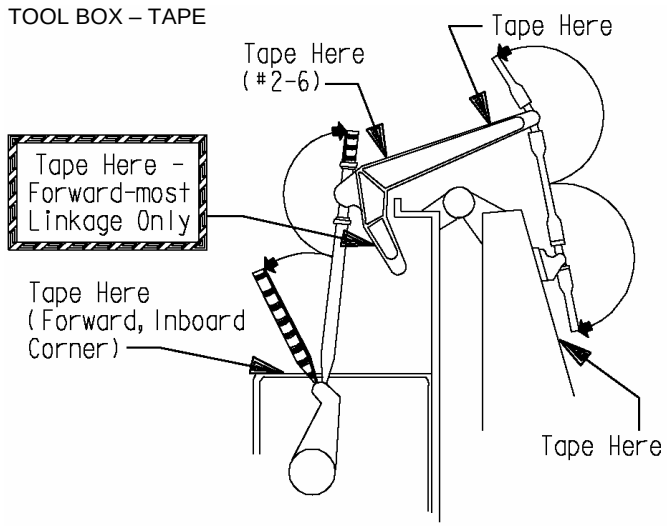

NOT IN EV CUFF 33 03/20/06

DOOR DRIVE DISCONNECT

TOOL BOX – PDU DISC TOOL, TRASH BAG

IV √Pwr off

1. Perform WINCH OPS, 35, steps 1,2
2. Remove fabric cover(s)
3. Insert Disc Tool in Door Drive PDU
   Xo – 798, port OR stbd
4. Rotate tool cw to stop (60 deg) and leave tool in PDU
5. Rotate torque shaft at least 3 turns (see below)
6. Perform WINCH OPS, 36, steps 3-7
7. If reqd for other door, rotate tool ccw 60 deg and remove from PDU

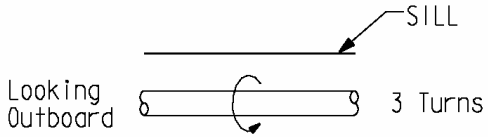

NOT IN EV CUFF 34 05/11/06

WINCH OPERATIONS

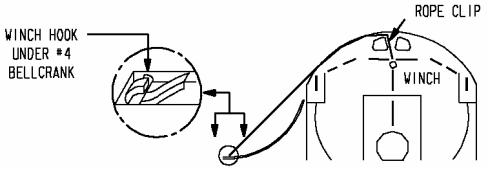

IV Radiators – stow and latch

1. Winch
   - CONTROL – REEL OUT
   - Handle ratchet – blue (center)
   - Attach rope to wrist tether
   - Rope: Fwd – in clip and over rollers
     - Aft – rope guide, under handrail, and over rollers
   - Winch hook – under #4 latch bellcrank
   - CONTROL – IN
   - Handle ratchet – green (cw)
2. Ratchet in rope <u>slack only</u>

Cont next pg

NOT IN EV CUFF 35 03/20/06

WINCH OPERATIONS (CONT)

IV √Pwr off
3. PLBD(s) – close with winch

If aft not READY TO LATCH, repeat steps 1 and 3 at aft winch

IV √Pwr on

IV Latches – close
4. Winch hook – remove from PLBD
5. Rope – reel in excess
6. Handle – stow
7. Repeat steps 5-7 for aft winch, if reqd

NOT IN EV CUFF 36 03/20/06

3-PT TOOL INSTALLATION

TOOL BOX – 3-PT TOOLS, ADJUSTABLE TETHERS

IV √Pwr off
1. Position installation handles as reqd
2. Tools – install in sequence per IV table
3. Ratchet select lever – green
4. Handle – ratchet to hard stop
   – stow handle or restrain with Adj tether

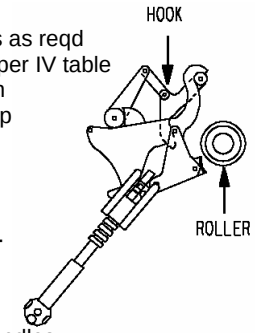

TOOL RESET

1. Ratchet – red
2. Handle – ratchet to stop
3. Tool – compress to latch handles

NOT IN EV CUFF 37 03/20/06

CL LATCH TOOL

TOOL BOX – CL LATCH TOOLS

IV √Pwr off
1. Tools – install per IV table
2. Trigger – safety off
   – depress
3. Ratchet select lever – green
4. Handle – ratchet to hard stop
   – stow

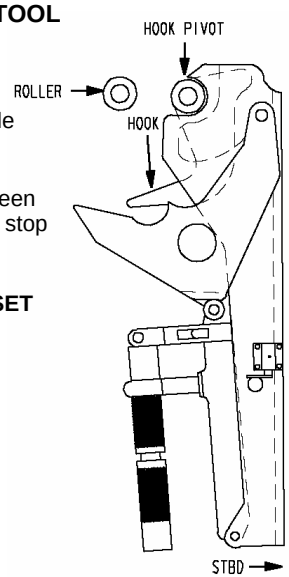

TOOL RESET

1. Ratchet – red
2. Handle – ratchet to stop
   – stow
3. Tool – compress to latch

NOT IN EV CUFF 38 03/20/06

RMS JOINT ALIGN

TOOL BOX – ADJ TETHERS, SNATCH BLOCKS (2), RMS ROPE REEL

1. Attach RMS rope around end effector under handrail. Translate to avoid wrapping rope around RMS
2. Attach snatch block(s) to handrail(s) and route rope as reqd

IV
3. Reposition RMS as required for cradling
4. Pull RMS down into MPMs
5. Perform final positioning by hand to allow MRLs to latch

RMS SHOULDER BRACE RELEASE

TOOL BOX – RMS SHOULDER BRACE RELEASE TOOL

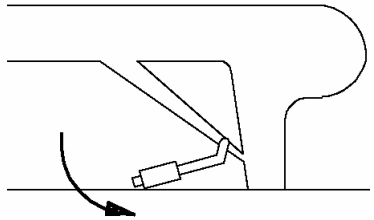

1. Fold aside rub strip and thermal blankets
2. Insert tool and move handle down
3. Remove tool and reconfigure blankets

NOT IN EV CUFF 39 03/20/06

MPM STOW/DEPLOY

TOOL BOX – MPM WRENCH

1. Rotate torque shaft (8 revs) until MPMs are stowed/deployed, X_o=693

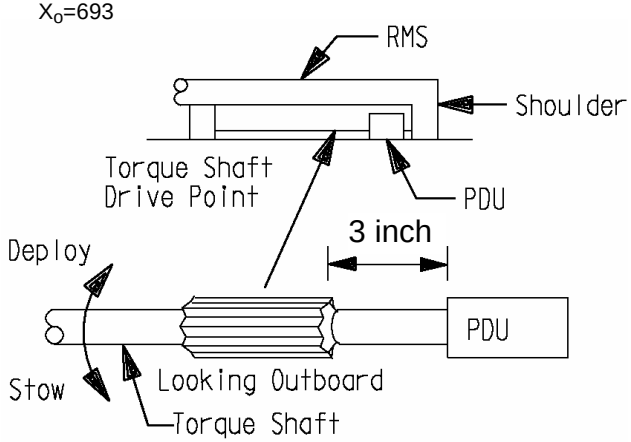

NOT IN EV CUFF 40 03/20/06

RMS TIEDOWN

TOOL BOX – PRDs (2), EVA TRASH BAG
IFM – 9/64-in ALLEN WRENCH (AW)
ELBOW – PRD aft of MPM, peel blanket (fwd of MPM) toward EE; feed hook under cable harness (if reqd, remove cable harness clamp bolt with AW, bend clamp out of way), adjust strap as far fwd as possible
WRIST – PRD aft of MPM, strap rests just fwd of pitch joint opening
END EFFECTOR – PRD fwd of MPM, peel blankets aft and fwd, strap rests aft-most on yaw joint (at roll/yaw I/F), adjust strap under bolt studs

1. Figure eight the strap
2. Pull minimum 6-in slack in strap
3. Ratchet PRD snug, (14 full strokes reqd)
4. √Strap in correct arm location, ratchet tight
5. Reattach blankets

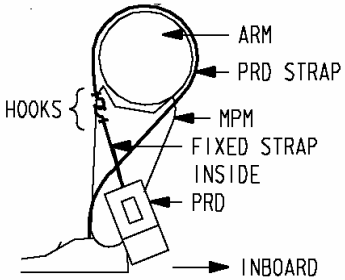

NOT IN EV CUFF 41 03/20/06

RMS FLIGHT RELEASABLE GRAPPLE FIXTURE RELEASE

AIRLOCK – JETTISON STOWAGE BAG
TOOL BOX – 1/2-in BOX RATCHET, VELCRO/TAPE

EV
1. Rotate white release rod ccw to hard stop (32 strokes of 90 deg)
2. Rotate black release rod cw to hard stop (32 strokes of 90 deg – shaft will release from grapple fixture)
3. Clear worksite for RMS powerdown
4. Tape end of shaft to restrain slug within shaft
5. Cover end effector with jettison stowage bag to restrain grapple shaft

NOT IN EV CUFF 42 03/20/06

PRLA OPEN/CLOSE

AIRLOCK – RATCHET WITH 7/16 SOCKET

IV √PRLA PWR OFF

EV
1. Rotate ratchet in release direction (as marked above EVA drive) to shear pin
2. View yellow indicator as applicable
3. Continue to rotate drive 4-1/2 revs to disc gear train from drive shaft

To open latch:
4. Continue rotation in release direction (as marked above EVA drive) until latch open against stop

To close latch:
5. Rotate EVA drive in opposite direction of release (as marked above EVA drive) until latch closed against hardstop and over center

IV √PRLA tb LAT

Cont next pg

NOT IN EV CUFF 43 03/20/06

PRLA OPEN/CLOSE (CONT)

EV 6. Apply PRLA locking feature if applicable
To lock:
7. Rotate each bolt (two) cw 1/2 turn

For subsequent PRLA ops, release locking feature before operating EVA drive (two bolts ccw 1/2 turn); relock after operation

NOT IN EV CUFF 44 03/20/06

KU ANTENNA STOW

1. Secure tether reel clear of antenna dish with wrist tether

> CAUTION
> Antenna dish is very fragile. Avoid contact with gold thermal blankets and black painted surfaces

2. Align α (dish roll) and β (dish pitch) gimbals for pin engagement
3. Give IV GO to drive pins in short pulses

> NOTE
> Top lockarm (by wide beam horn and gold foil) drives fully before bottom lockarm (by silver gyro box)

NOT IN EV CUFF 45 03/20/06

KU ANTENNA STOW (CONT)

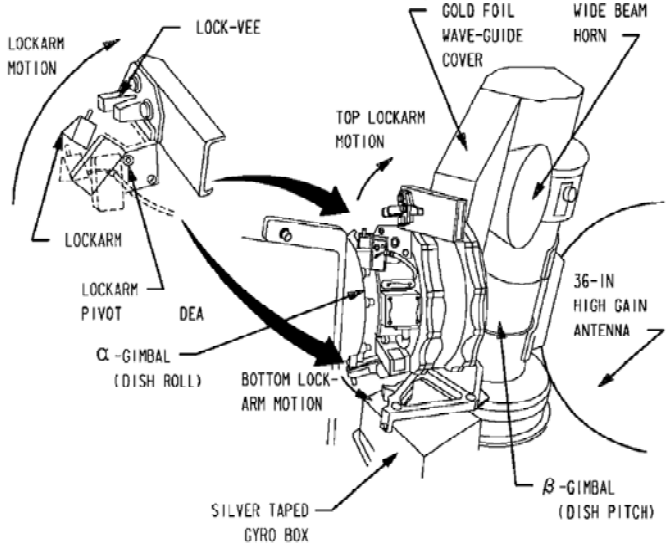

NOT IN EV CUFF 46 03/20/06

AIRLOCK EGRESS

DAISY CHAIN: EV2 waist tether to A/L internal D-ring
EV2 safety tether (retracting end) to EV1 waist tether

EV1 1. Thermal cover – open
2. Egress airlock
3. Attach safety tether, retracting end to ODS dogbone handrail (or orbiter handrail tether point); lock hook, √reel unlocked
4. Attach EV2's safety tether, retracting end to separate ODS dogbone handrail; lock hook, √reel unlocked

BOTH 5. Waist tethers – attach to self, stow extra waist tether (if reqd) in A/L clear of hatch

EV2 6. Egress airlock
7. Thermal cover – close

NOT IN EV CUFF 47 11/03/06

This Page Intentionally Blank

FLIGHT SPECIFIC REFERENCE

– – – – – FS REF – – – – –

– – – – – FS REF – – – – –

This Page Intentionally Blank

UNSCHEDULED/CONTINGENCY EVA TASKS

This Page Intentionally Blank

EVA REFERENCE

This Page Intentionally Blank

Replace this page with page(s) from Flight Supplement

Replace this page with page(s) from Flight Supplement

EVA EMERGENCY

– – – – – EVA EMERGENCY – – – – –

- - - - - EVA EMERGENCY - - - - -

This Page Intentionally Blank

EMERGENCY PROCEDURES

EMERGENCY AIRLOCK REPRESS 19-3
EMERGENCY AIRLOCK REPRESS 19-4
POST EMERGENCY AIRLOCK REPRESS 19-4
SAFER RESCUE 19-5
SAFER RESCUE 19-6
DAP/EVA RESCUE/RETRIEVE 19-7
EVA ORBITER CONFIG 19-7
RESCUE/RETRIEVE 19-9
19.1 DCS TREATMENT 19-10

This Page Intentionally Blank

EMERGENCY AIRLOCK REPRESS

EMERGENCY AIRLOCK REPRESS

NOTE: Ignore CWS functions

Outer (EVA) hatch – close and lock

Inner hatch Equal vlv (two) – EMER

AW82B: √AIRLK DEPRESS vlv – CL

DCM: WATER – OFF (fwd)

Open inner hatch

Go to POST EMERGENCY AIRLOCK REPRESS

POST EMERGENCY AIRLOCK REPRESS

WARNING
This procedure should not be performed following a Cuff 4 DCS incident

For affected crewmember:

DCM	1.	PURGE vlv – op (up)
	2.	O2 ACT – OFF
	3.	√STATUS: SUIT P < 0.4 (compare with gauge)
	4.	Disconnect gloves
	5.	Disconnect helmet
	6.	Connect SCU to DCM
AW18H	7.	PWR/BATT CHGR EMU 1(2) BUS SEL – MNA(MNB)
DCM	8.	PWR – SCU

For unaffected crewmember:

DCM	9.	O2 ACT – IV
	10.	Connect SCU to DCM
AW18H	11.	PWR/BATT CHGR EMU 1(2) BUS SEL – MNA(MNB)
DCM	12.	PWR – SCU

If single crewmember aborting EVA:

13. Outer (EVA) hatch Equal vlv caps (two) – remove, stow
14. √MCC

SAFER RESCUE

SAFER RESCUE

1. Deploy SAFER HCM
2. PWR – ON
3. Wait for AAH, line up with separation point
   Fly to vehicle
   Monitor GN2% and PWR%

   * If no gas flow: *
   * √MAN ISOL vlv – OP (dn) *

IV/other EV 4. Provide GCA (as reqd)
   Provide range and range rate using Laser Range Finder, as reqd
   Configure WVS and vehicle cameras to assist
   Turn on external vehicle lights, as reqd

5. Tether to nearest structure, √connection
6. Tether to available safety tether or other EV crewmember, √connection
7. PWR – OFF
8. MAN ISOL vlv – CL (up)
9. √MCC

EVA ORBITER CONFIG

1. GENERIC ORBITER CONFIGURATION

A6U
SENSE – as reqd
FLT CNTLR PWR – OFF
DAP TRANS: PULSE/PULSE/PULSE

O14, O15, O16
cb MNA,C DDU AFT (two) – cl
Pri RJD LOGIC,DRIVER (sixteen) – ON

GNC 20 DAP CONFIG

CRT
√PRI TRAN PLS – ITEM 17 +0.10
√ITEM 37 +0.05

A1U
√KU CNTL – CMD
PWR – STBY

Unstow, review EVA RESCUE procedure

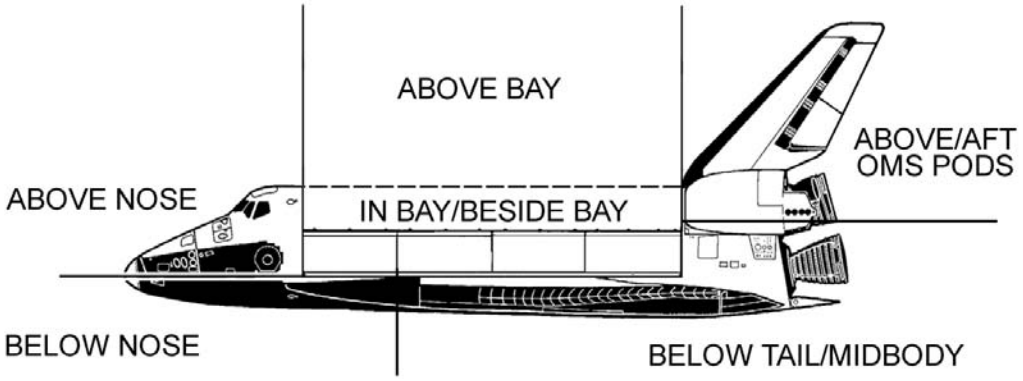

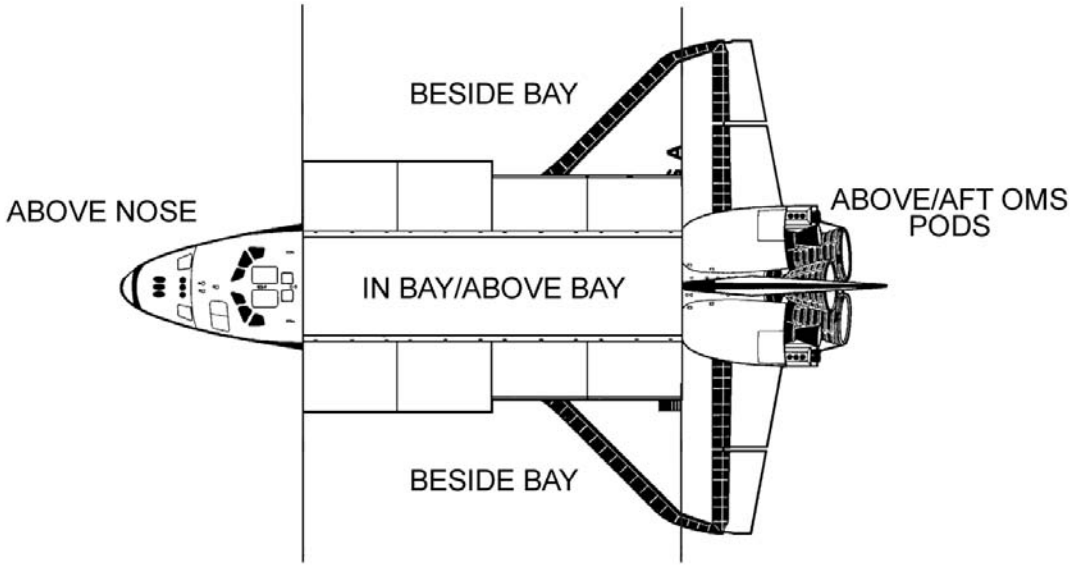

2. REGION-SPECIFIC ORBITER CONFIGURATION
   Using region charts, determine region(s) in which EVA crewmembers will be located
   Working in order top of table to bottom using the most restrictive region, configure orbiter systems per following table, performing any Initial Configuration Actions which contain a '√'
   Items which do not have a '√' may be configured as desired to meet mission-specific requirements

> **WARNING**
> Deviating from orbiter systems configuration called out in following table may put EVA crewmembers at risk of being plumed by RCS jets

NOTE

The following table should be used for initial configuration. It should not be used during the EVA (e.g., for EVA RESCUE).

If VERNs not available, use ALT instead. All other configuration actions remain unchanged

		In Bay	Above Bay	Above Nose	Above/Aft OMS Pods	Below Tail/Midbody	Below Nose	Beside Bay
	INITIAL CONFIGURATION ACTIONS							
D A P	VERN	√	√	√				√
	ALT				√	√	√	
	LOW Z		√					
	No LOW Z			√		√	√	
SPEC 20	P/Y/JET OPTION (PRI & ALT, DAP A & B) – ALL				√	√		
	P/Y/JET OPTION (PRI & ALT, DAP A & B) – TAIL			√			√	
SPEC 23	OVRD L/R MANFs 1,2,4 (six) – CL				√			
	L3L,R3R (two) – DES				√			
	OVRD L/R MANFs 2,3,4 (six) – CL					√		
	L1L,R1R (two) – DES					√		
O14, O15, O16	RJDA L1/R1 (L2/R2, L4/R4) DRIVER (three) – OFF				√			
	RJDA L2/R2 (L3/R3, L4/R4) DRIVER (three) – OFF					√		
	RJD MANF L5/F5/R5 DRIVER – OFF				√	√	√	
	RJDF F1(F2,F3,F4) MANF DRIVER – OFF (four)			√			√	
MISC	FLT CNTLR PWR (three) – OFF				√	√		√

3. POST-EVA RECONFIGURATION
   Return orbiter to desired/required systems configs

NOTE

Assumes that EVA ORBITER CONFIG procedure has already been performed

1. CONFIGURATION

A6U DAP: FREE(INRTL)

√SENSE SWITCH as desired

O14:F, O15:F, O16:F √Pri RJD LOGIC,DRIVER (sixteen) – ON

O16:F √RJD MANF L5/F5/R5 DRIVER – ON

GNC 23 RCS

OVRD L/R MANF – OP (if OVRD CLOSED earlier)

A1U KU CNTL – PNL

2. OPERATIONS

NOTE

When EVA crewmember clear of RCS jets, FLT CNTLR PWR ON and DAP INRTL

If TRANSLATION:

DAP: LO Z, as reqd (DAP A has larger TRANS PULSE size)

If ROTATION:

DAP: VERN(PRI), as reqd

NOTE

Translate, then rotate, as reqd to center crewmember over bay.

Null translational rates, then establish closing(opening) rate as reqd to crewmember in bay.

Use RMS and/or other EVA crewmember to assist if possible

19.1 DCS TREATMENT

DCS Signs and Symptoms Associated with Each Cuff Class Defined in Cuff C/L

1
- Determine Cuff Class

Cuff Class 1 → **2**
- Continue EVA
- If symptoms resolve upon REPRESS, go to Cuff Class 2, block 5
- Report to Surgeon next PMC

Cuff Class 2 or 3 (Report to MCC) → **3** (1 2 3)
- TERMINATE EVA (Cuff C/L, 7)
- Unaffected crewmember stow safety tether, perform worksite cleanup and/or PLB safing
- √MCC for PLB config
- Perform AIRLOCK INGRESS (Cuff C/L, 30)

If terminating for Cuff Class 3:
- Report to Surgeon
- If private comm wanted:
  PMC on A/G 1,COMM Mode – HL (A1R)
- AUD CTR UHF A/G 2 – T/R
- A/G 1 – OFF

Cuff Class 4 (Report to MCC) → **4** (4)

NOTE
DO NOT perform POST EMERGENCY AIRLOCK REPRESS
- ABORT EVA (Cuff C/L, 6) with ingress assist from unaffected crewmember
- Unaffected crewmember perform PLB safing

If single crew-member abort
- Outer hatch Equal vlv caps (two) – remove

- Unstow resuscitator from SOMS (MED C/L, CPR STATION, OXYGEN SUPPLEMENTAL)

Crewmember conscious?
- No → 20
- Yes → **9** Can crewmember speak in full sentences w/o respiratory distress?
  - No → 20
  - Yes → 19

5
(L2)
- O2/N2 CNTLR VLV SYS 1,2 (two) – OP
- Perform PRE-REPRESS (DEPRESS/REPRESS Cue Card)
- Perform REPRESS (DEPRESS/REPRESS Cue Card)
- Remain on SCU
- If CAB P ≤ 10.2, perform 10.2 PSI MAINTENANCE (10.2 PSI CABIN)
- Unaffected crewmember perform POST EVA per FLIGHT PLAN, omitting step 42
- Perform DCS exam (MED C/L)
- Report to Surgeon

Does MCC require EMU LiOH changeout?
- Yes → **6**
  - Perform LiOH REPLACEMENT (MANNED) (EMU CONT PROCS), omitting steps 3, 17, 18
- No → **7** (5) Cab P < = 11.0?
  - Yes → **8**
  - No → 10

8
- Leave O2 ACT – PRESS for 20 min (20 min check starts at 10.2 psi)
- Perform BTA PREP, BENDS TREATMENT ADAPTER (BTA) INSTALLATION (IN-SUIT) (EMU CONT PROCS)

DCS signs or symptoms resolved?
- Yes → 16
- No → 10

(1) EVA terminated to prevent progression to Cuff Class 4. If Cuff 2, affected crewmember will assist other EV with minor worksite cleanup, if possible, to expedite cleanup and then terminate EVA

(2) If estimated time reqd for DCS treatment exceeds LiOH consumables, a changeout should be performed. If 10 or 12 reqd, minimum treatment is ~3 hr

(3) For Cuff 2 or 3, private comm not required to allow for expedited treatment. For Cuff Class 3 only, affected crewmember waiting in A/L needs to be in contact with Surgeon due to severity and potential progression of symptoms

(4) Cuff Class 4 symptoms may be secondary to Type 2 DCS which is a medical emergency. Unstowing the resuscitator enables IV crew to be prepared to administer CPR, if reqd. Because it is critical to repress a Class 4 quickly, this may result in a one crewmember repress

(5) This decision block determines whether the cabin is being operated within 10.2 psi control range. Minor fluctuations above 10.6 have been seen; therefore, 11 psi was used to cover all 10.2 scenarios. Otherwise, cabin is being controlled at 14.7 psi

19.1 (Cont)

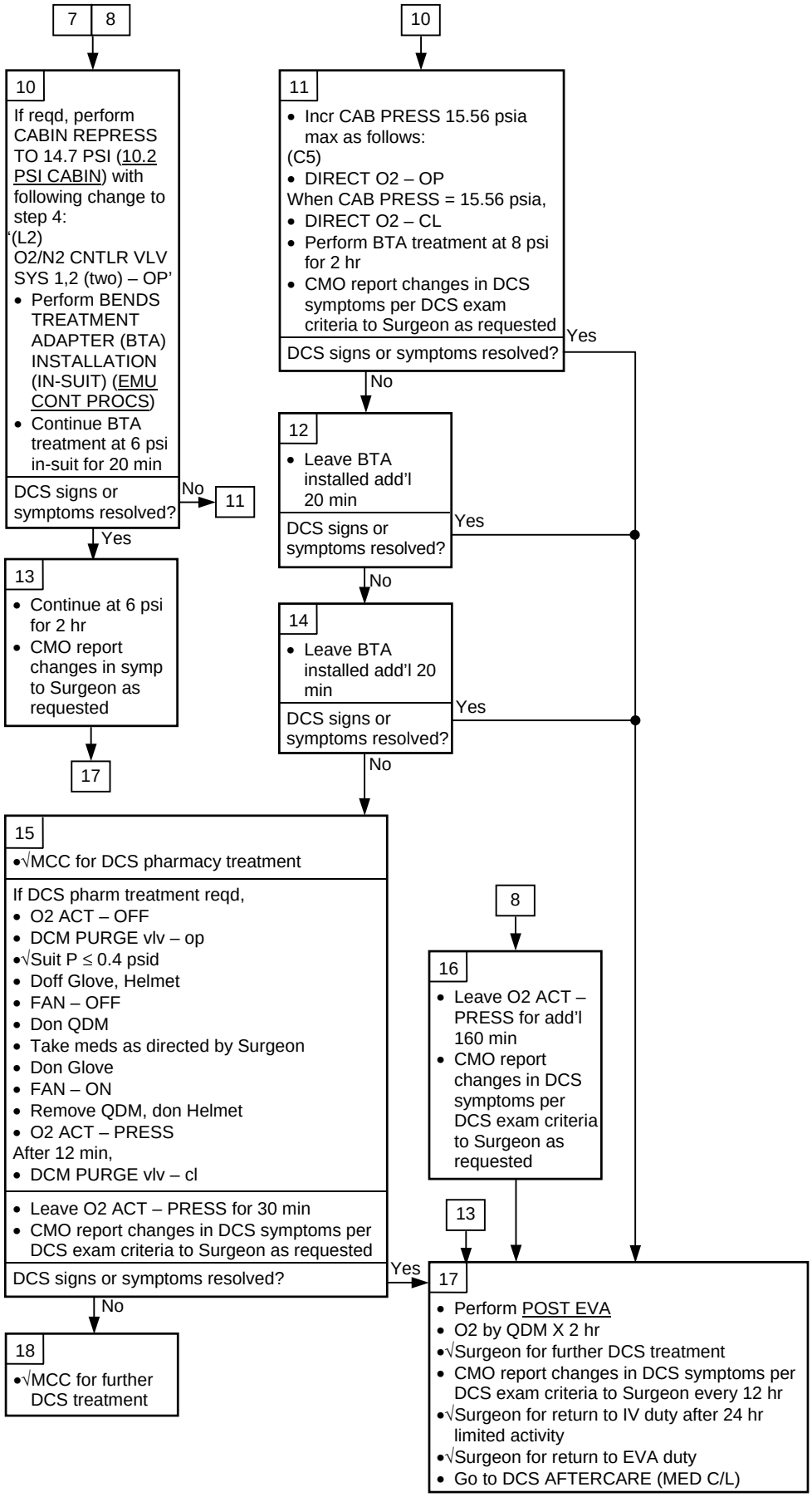
7 8
10
10
If reqd, perform CABIN REPRESS TO 14.7 PSI (10.2 PSI CABIN) with following change to step 4:
'(L2)
O2/N2 CNTLR VLV SYS 1,2 (two) – OP'
• Perform BENDS TREATMENT ADAPTER (BTA) INSTALLATION (IN-SUIT) (EMU CONT PROCS)
• Continue BTA treatment at 6 psi in-suit for 20 min
DCS signs or symptoms resolved?
No
11
Yes
13
• Continue at 6 psi for 2 hr
• CMO report changes in symp to Surgeon as requested
17
11
• Incr CAB PRESS 15.56 psia max as follows:
(C5)
• DIRECT O2 – OP
When CAB PRESS = 15.56 psia,
• DIRECT O2 – CL
• Perform BTA treatment at 8 psi for 2 hr
• CMO report changes in DCS symptoms per DCS exam criteria to Surgeon as requested
DCS signs or symptoms resolved?
Yes
No
12
• Leave BTA installed add'l 20 min
DCS signs or symptoms resolved?
Yes
No
14
• Leave BTA installed add'l 20 min
DCS signs or symptoms resolved?
Yes
No
15
•√MCC for DCS pharmacy treatment
If DCS pharm treatment reqd,
• O2 ACT – OFF
• DCM PURGE vlv – op
•√Suit P ≤ 0.4 psid
• Doff Glove, Helmet
• FAN – OFF
• Don QDM
• Take meds as directed by Surgeon
• Don Glove
• FAN – ON
• Remove QDM, don Helmet
• O2 ACT – PRESS
After 12 min,
• DCM PURGE vlv – cl
• Leave O2 ACT – PRESS for 30 min
• CMO report changes in DCS symptoms per DCS exam criteria to Surgeon as requested
DCS signs or symptoms resolved?
Yes
No
18
•√MCC for further DCS treatment
8
16
• Leave O2 ACT – PRESS for add'l 160 min
• CMO report changes in DCS symptoms per DCS exam criteria to Surgeon as requested
13
17
• Perform POST EVA
• O2 by QDM X 2 hr
•√Surgeon for further DCS treatment
• CMO report changes in DCS symptoms per DCS exam criteria to Surgeon every 12 hr
•√Surgeon for return to IV duty after 24 hr limited activity
•√Surgeon for return to EVA duty
• Go to DCS AFTERCARE (MED C/L)

19.1 (Cont)

9

(6)

19

- Perform CABIN REPRESS TO 14.7 PSI (10.2 PSI CABIN) with following change to step 4:

(L2)

- O2/N2 CNTLR VLV SYS 1,2 (two) – OP'

When 14.7 REPRESS complete,

- Incr CAB PRESS to 15.56 psia max as follows:

(C5)

- DIRECT O2 – OP

When CAB PRESS = 15.56 psia,

- DIRECT O2 – CL

21

- Perform BENDS TREATMENT ADAPTER (BTA) INSTALLATION (IN-SUIT) (EMU CONT PROCS)
- Perform BTA treatment at 8 psi for 2 hr
- Perform DCS EXAM (MED C/L) and report changes in DCS symptoms to Surgeon every 15 min

DCS signs or symptoms resolving?

Yes → 23

No → 23

23

(8)

22

- Remain on SCU with O2 ACT – PRESS and BTA installed as determined by MCC

23

- √MCC for DCS pharmacy treatment

If DCS pharmacy treatment reqd,

- O2 ACT – OFF
- DCM PURGE vlv – op
- √Suit P ≤ 0.4 psid
- Doff Glove, Helmet
- FAN – OFF
- Don QDM
- Take meds as directed by Surgeon
- Don Glove
- FAN – ON
- Remove QDM, don Helmet
- O2 ACT – PRESS

After 12 min,

- DCM PURGE VLV – CL

- Leave O2 ACT – PRESS for 30 min
- CMO report changes in DCS symptoms per DCS exam criteria to Surgeon as requested

DCS signs or symptoms resolved?

Yes → 22

No → 24

(9)

24

- √MCC for further action and possible deorb to PLS/ELS with hyperbaric facilities
- √MCC for delayed EMU doff, stow

25

- Perform POST EVA
- O2 by QDM X 2 hr
- √Surgeon for further DCS treatment
- CMO report changes in DCS symptoms per DCS exam criteria to Surgeon every 12 hr
- √Surgeon for return to IV duty after 24 hr limited activity
- √Surgeon for return to EVA duty
- Go to DCS AFTERCARE (MED C/L)

4 9

(7)

20

- Perform POST EVA
- Treat affected crewmember per CPR STATION (MED, CPR STATION)
- √MCC for further action or incapacitated crewmember

If CAB P < 15.56 psia,

- Perform CABIN REPRESS TO 14.7 PSI (10.2 PSI CABIN) with following change to step 4:

'(L2)

O2/N2 CNTLR VLV SYS 1,2 (two) – OP'

When 14.7 REPRESS complete,

- Incr CAB PRESS to 15.56 psia max as follows:

(C5)

- DIRECT O2 – OP

When CAB PRESS = 15.56 psia

- DIRECT O2 – CL

(6) Max pressure should be used to treat Cuff Class 4 DCS (type 2 DCS

(7) Incapacitated crewmember needs hyperbaric treatment on Earth as soon as possible. If airlock not available due to single crewmember abort, perform POST EVA in middeck on battery power. EVA FCT should be prepared to modify procedure for single crewmember abort

(8) MCC will determine allowable cumulative O2 time based on O2 toxicity limit. O2 time will vary based on EVA time and pressure profile

(9) Because DCS symptoms unresolved, deorbit to site with hyperbaric facility reqd for add'l treatment. Affected crewmember should remain in pressurized EMU as long as possible

CUE CARD CONFIGURATION

Refer to the following pages for cue cards and decals in this document:

CC 3-10	SAFER CHECKOUT RESULTS Cue Card
CC 3-11	SAFER STATUS TROUBLESHOOTING Cue Card
CC A6-2	DEPRESS/REPRESS Cue Card (Nominal Config)
CC B6-2	DEPRESS/REPRESS Cue Card (Tunnel Adapter)
CC 6-4	FAILED LEAK CHECK Cue Card
19-4	EMERGENCY AIRLOCK REPRESS Decal

Space Shuttle Program
FLIGHT DATA FILE

JSC-48023
GENERIC, REV H

SPACE SHUTTLE

EVA CHECKLIST

STS
ALL

Flight Cover (trim bottom to expose tabs)