FLIGHT SPECIFIC EVA REFERENCE

STS-121 PAYLOAD BAY LAYOUT ..... FS 18-3
ESP2 HR AND WIF LAYOUT (ZENITH) ..... FS 18-4
ESP2 HR AND WIF LAYOUT (NADIR) ..... FS 18-5
ESP2 FINAL CONFIG ..... FS 18-6
ICC LAUNCH CONFIG (TOP AND BOTTOM VIEWS) ..... FS 18-7
ICC LANDING CONFIG ..... FS 18-8
ICC LAYOUT ..... FS 18-9
SHOSS-ED WITH AGB ..... FS 18-10
DDCU COLDPLATE (INSIDE SHOSS-ED BOX) ..... FS 18-11
MBSU COLDPLATE (INSIDE SHOSS-ED BOX) ..... FS 18-12
ADJUSTABLE GRAPPLE BAR ..... FS 18-13
ADJUSTABLE GRAPPLE BAR PINS ..... FS 18-14
FGB MOUNTING PLATE ..... FS 18-15
FGB INSTALL LOCATION ON PUMP MODULE ..... FS 18-16
FGB INSTALLED ON PUMP MODULE ..... FS 18-17
PLASTIC FGB BASE SIMULATOR ..... FS 18-18
FRAM STRUCTURAL COMPONENT OVERVIEW ..... FS 18-19
FLIGHT RELEASABLE ATTACHMENT MECHANISM (FRAM) ..... FS 18-20
FRAM ACTIVE AND PASSIVE INTERFACES ..... FS 18-21
ACTIVE FRAM ..... FS 18-22
VSSA STANCHIONS ON ESP2 ..... FS 18-23
CAMERA INSTALL CP9 ..... FS 18-24
VIDEO STANCHION ..... FS 18-25
VSSA DUMMY BOX ..... FS 18-26
ETVCG COMPONENTS ..... FS 18-27
ETVCG PAN AND TILT RELEASE LEVERS ..... FS 18-28
LMC LAYOUT ..... FS 18-29
DTO 848 TPS REPAIR SAMPLE BOX ..... FS 18-30
DTO 848 SAMPLE BOX ACCESS HATCH ..... FS 18-31
DTO 848 SAMPLE BOX COMPONENTS ..... FS 18-32
DTO 849 WS STABILIZATION LOAD CELL CONCEPT ..... FS 18-34

This Page Intentionally Blank

STS-121 PAYLOAD BAY LAYOUT

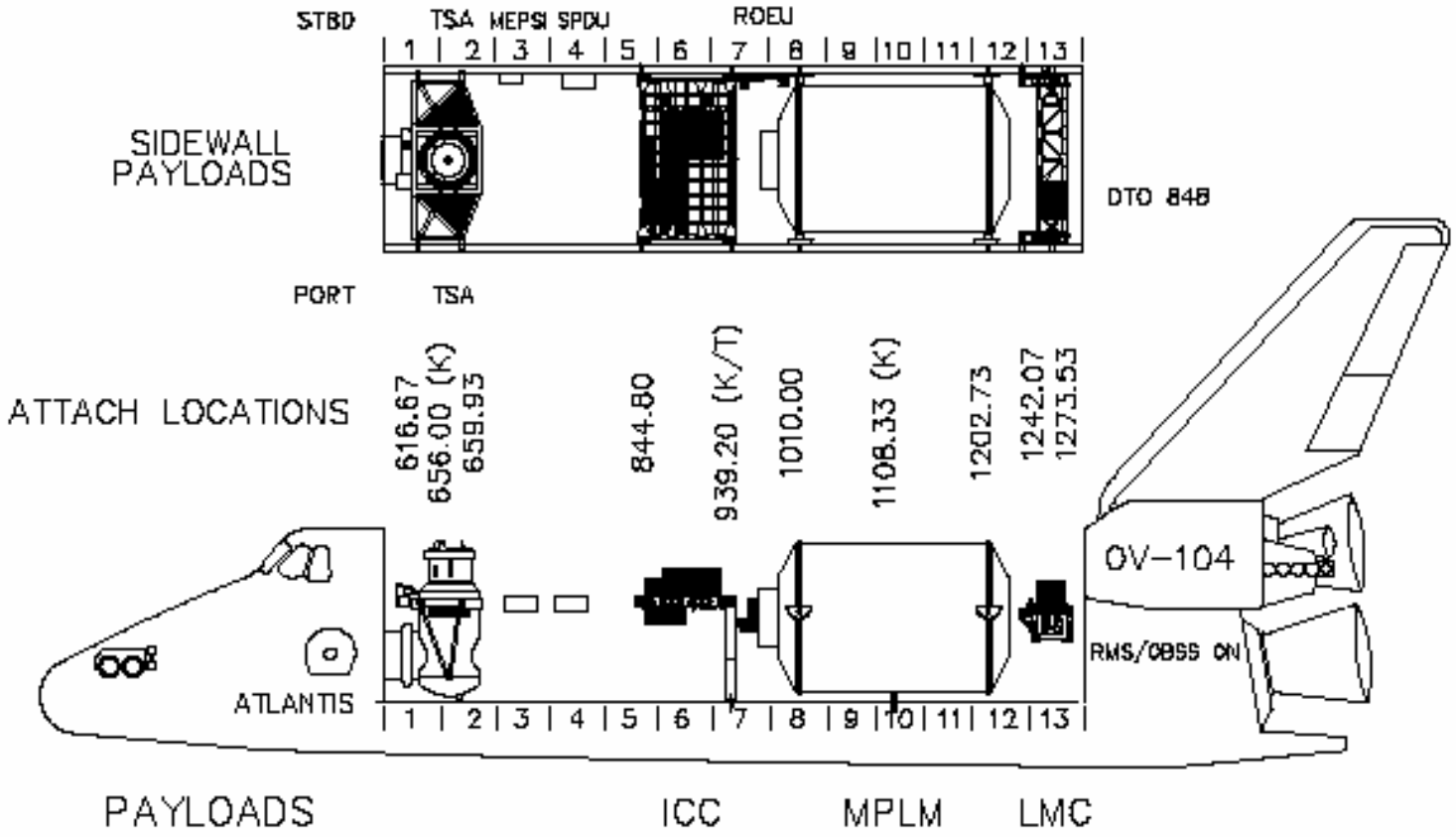

ESP2 HR AND WIF LAYOUT (ZENITH)

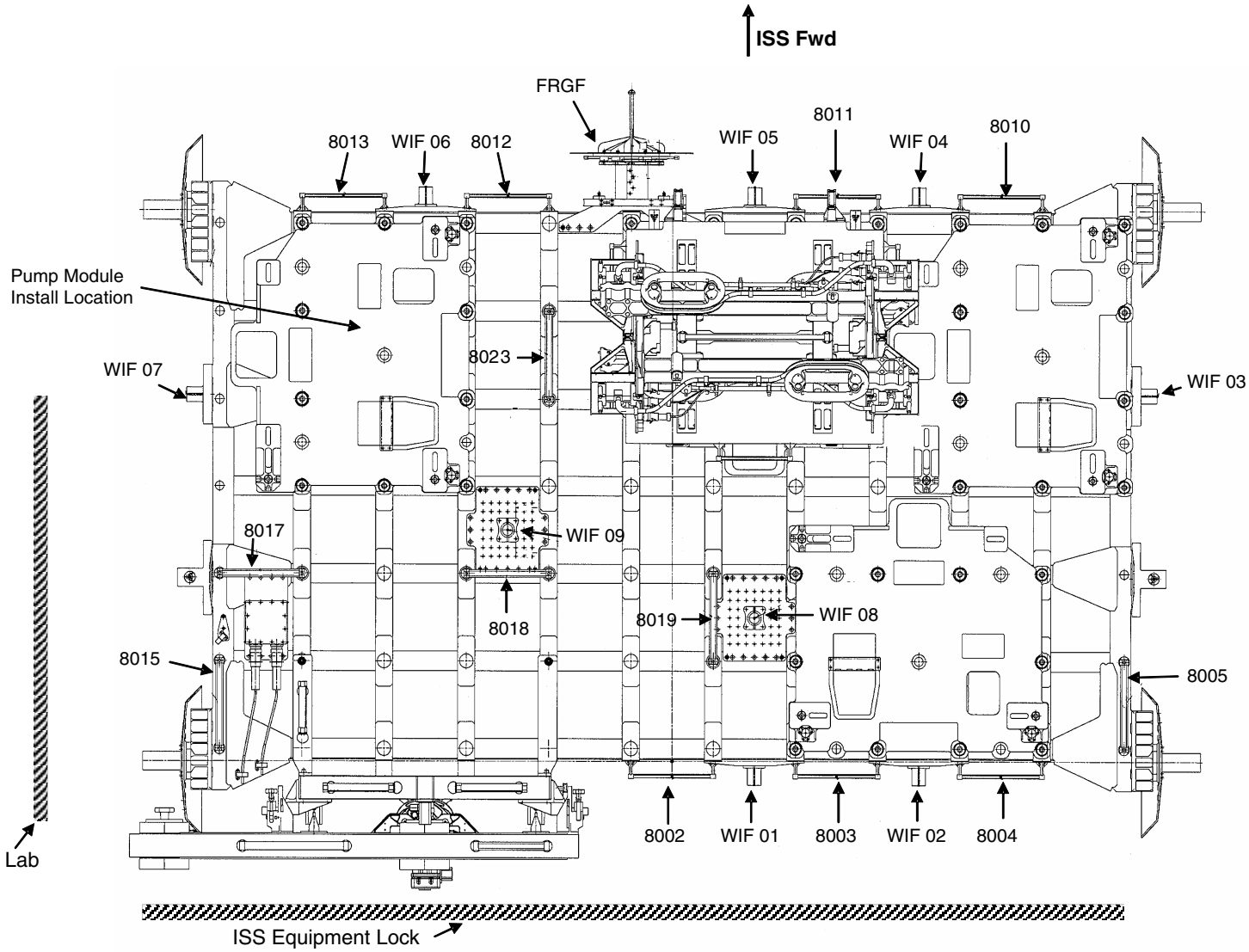

ESP2 HR AND WIF LAYOUT (NADIR)

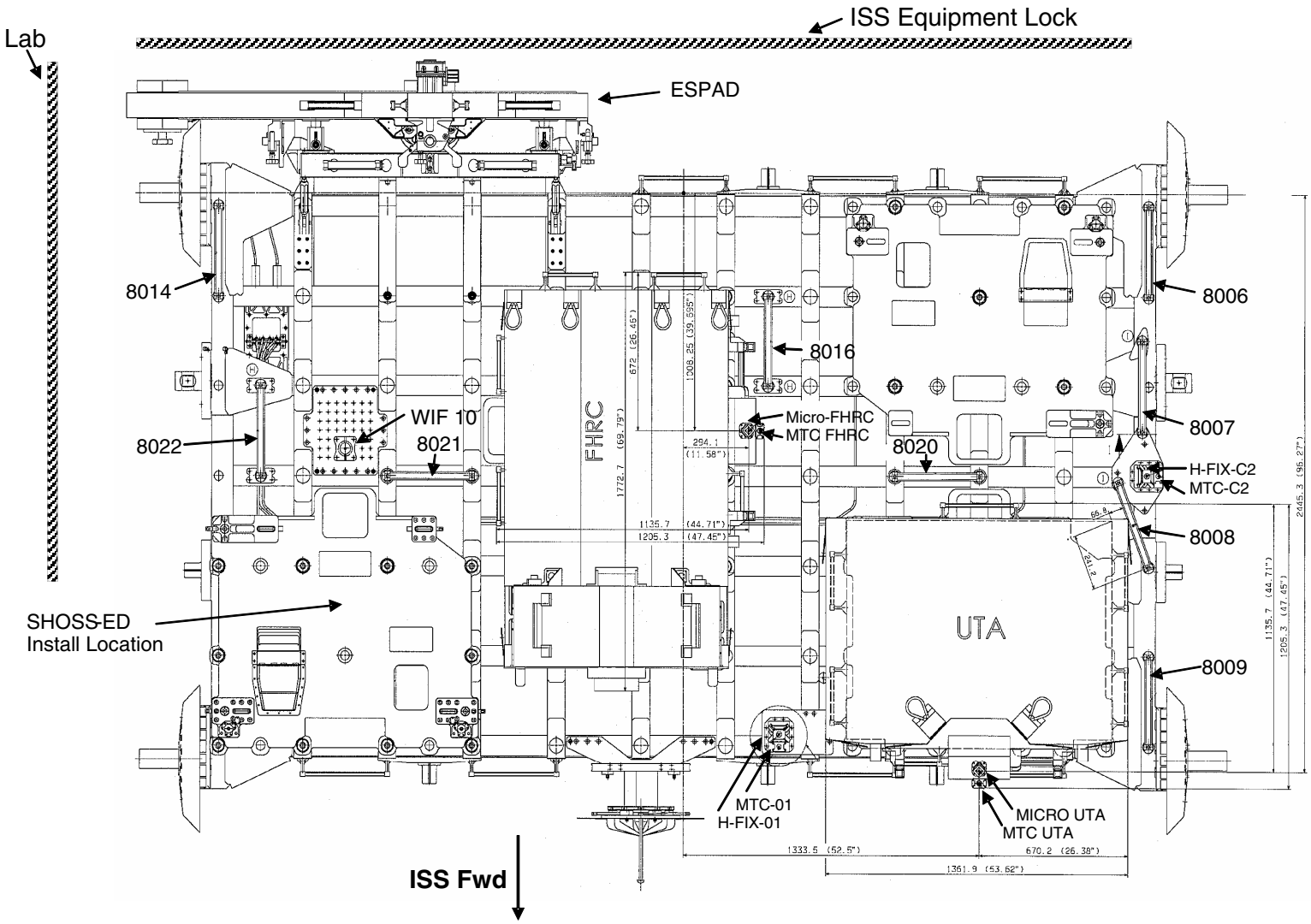

ESP2 FINAL CONFIGURATION

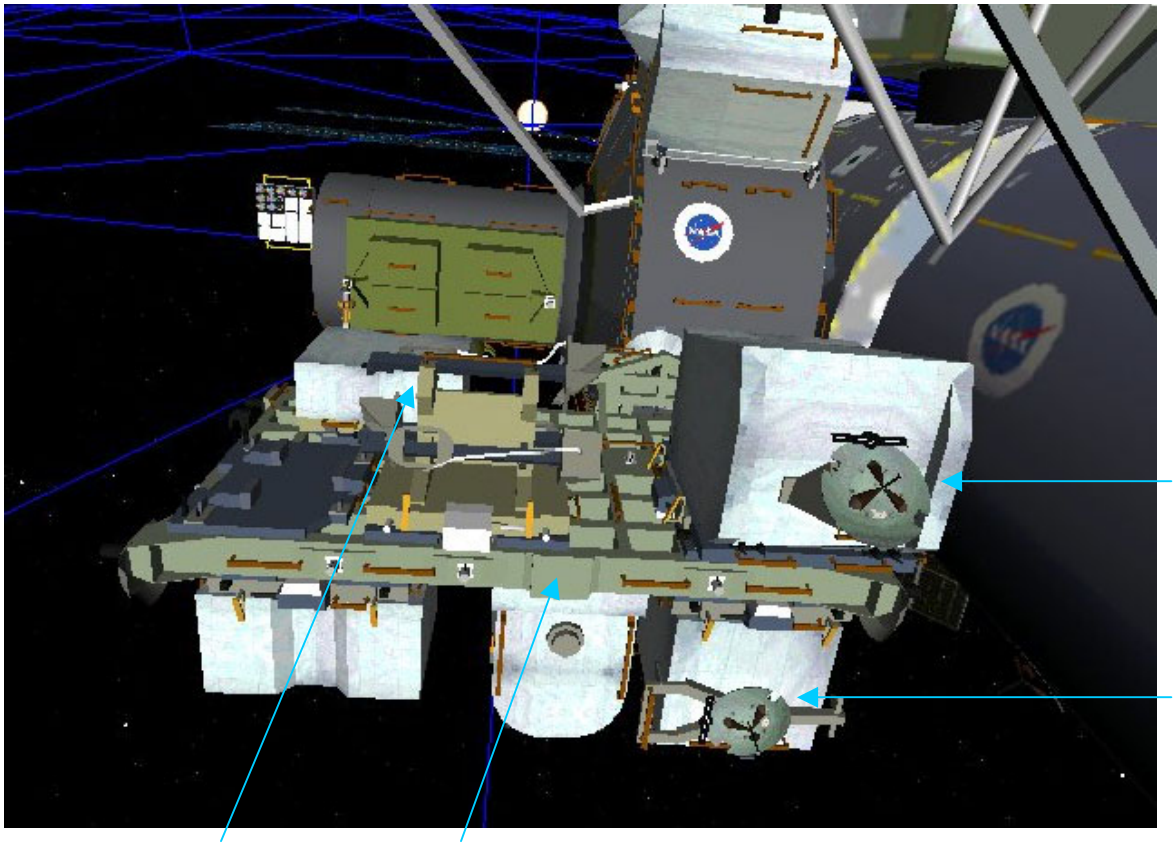

ICC LAUNCH CONFIG (TOP AND BOTTOM VIEWS)

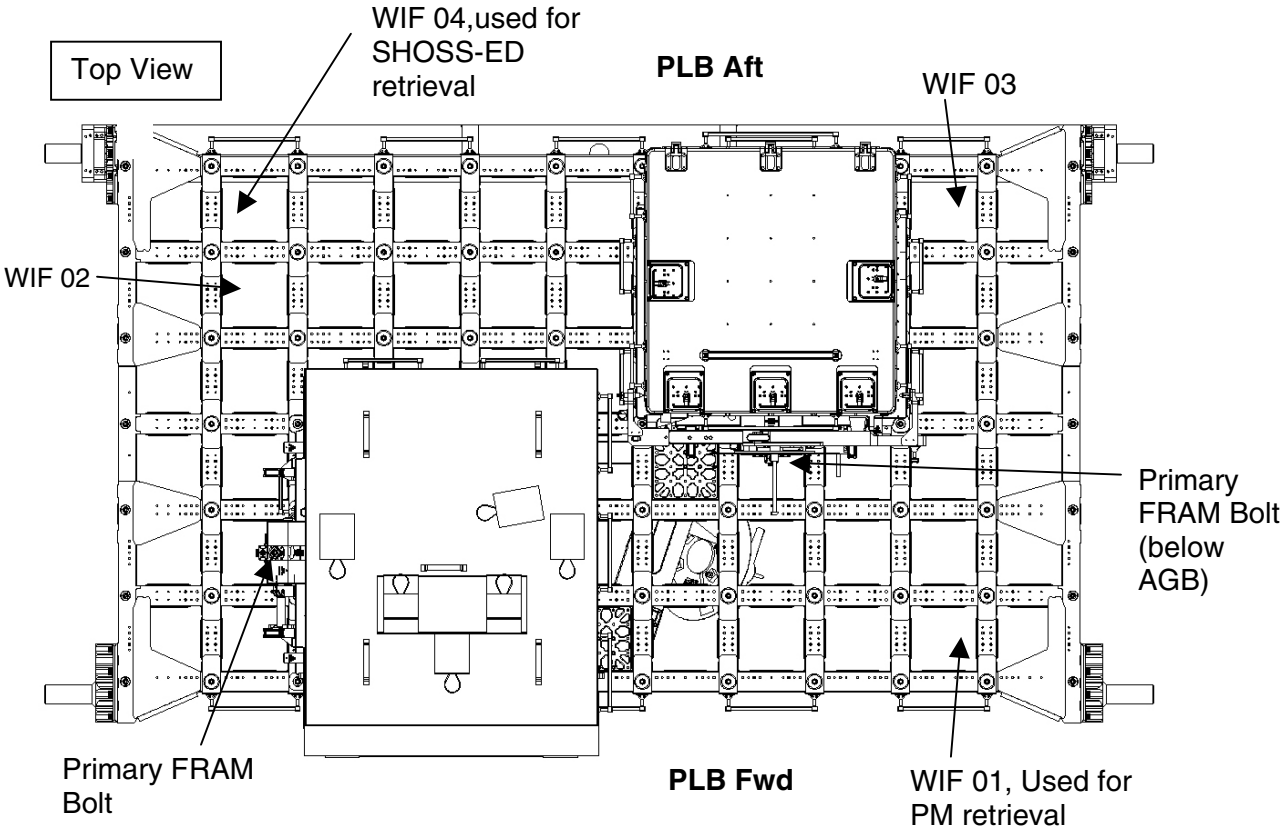

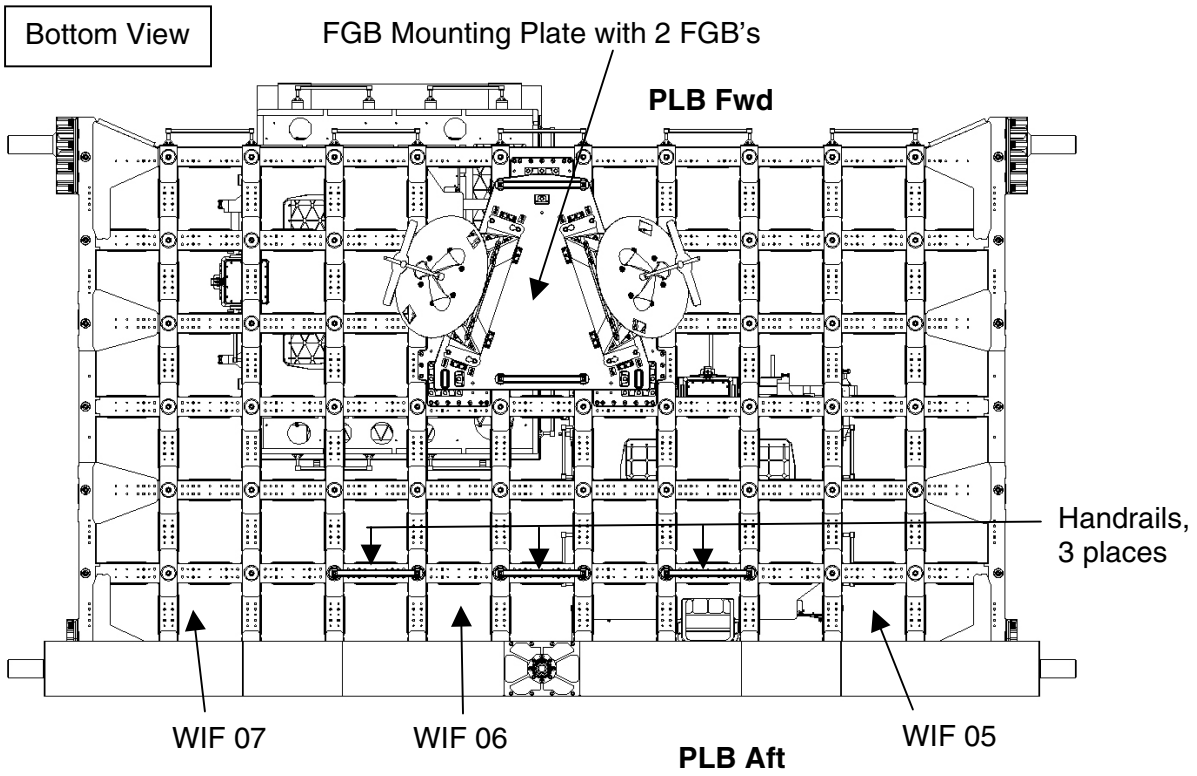

ICC LANDING CONFIG

Top View – <u>NOTE</u>: FGB mounting plate on underside not shown

PLB Aft

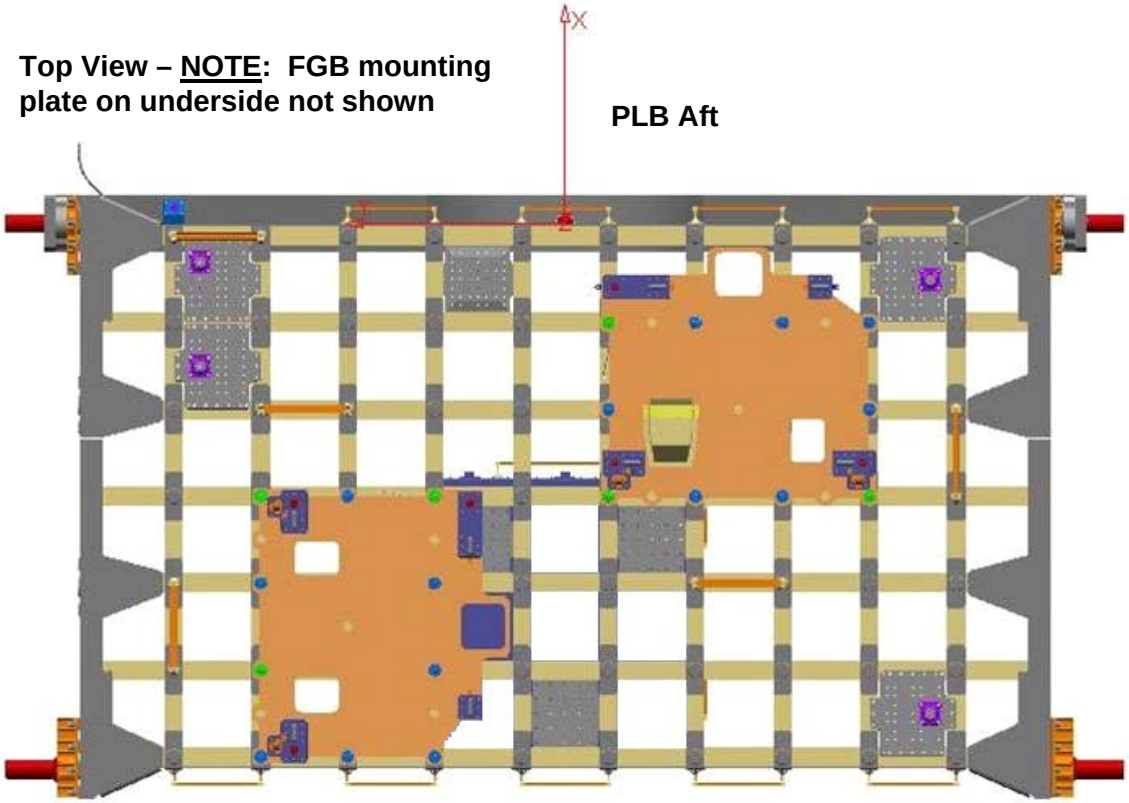

PLB Fwd

Bottom View – <u>NOTE</u>: ORUs still shown on upper side (instead of PFRAMs only)

PLB Fwd

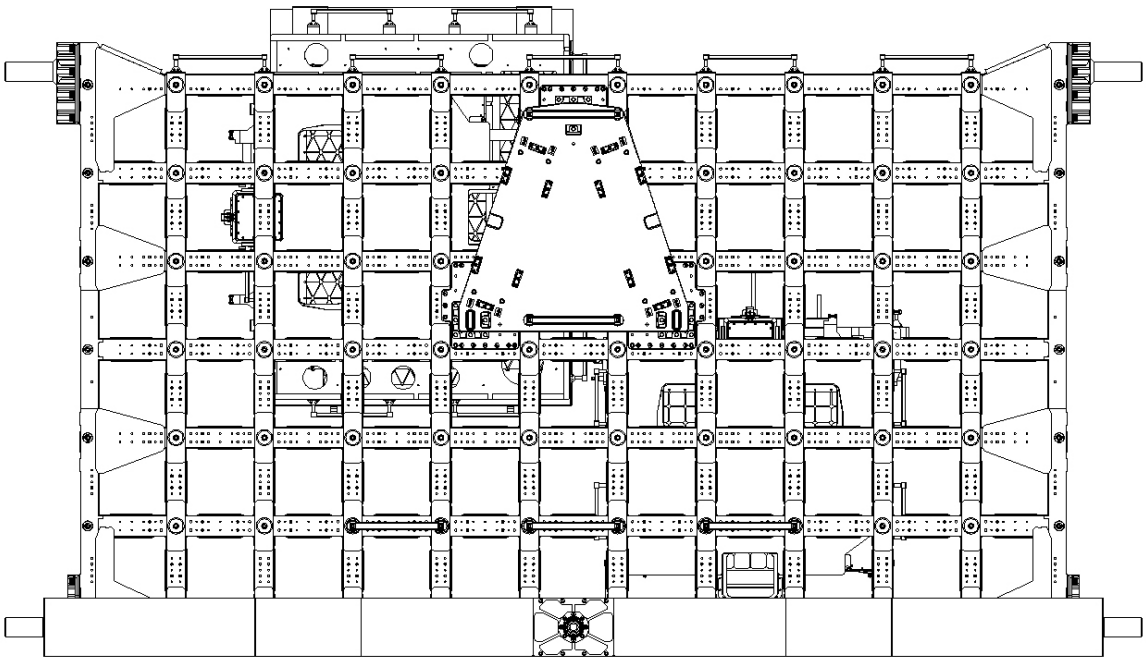

PLB Aft

ICC LAYOUT

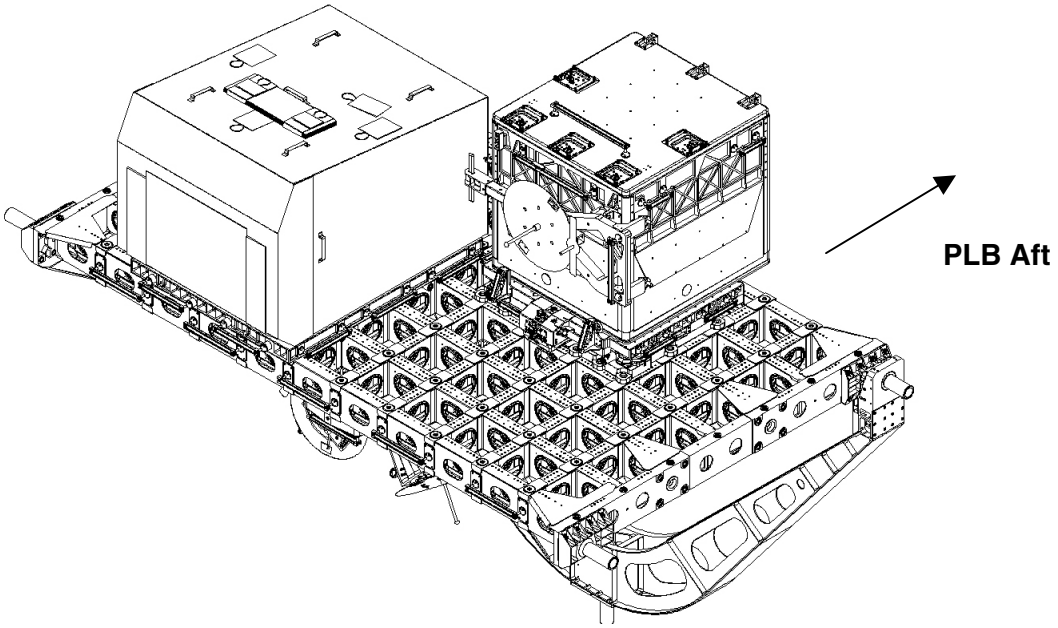

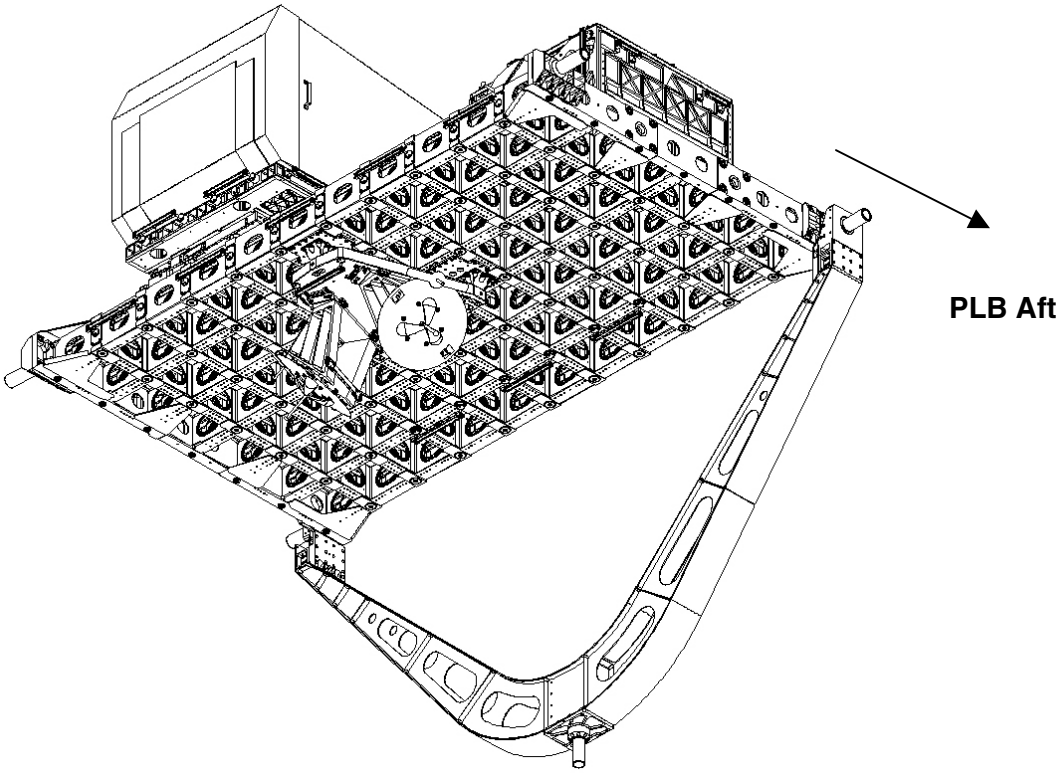

SHOSS-ED WITH AGB

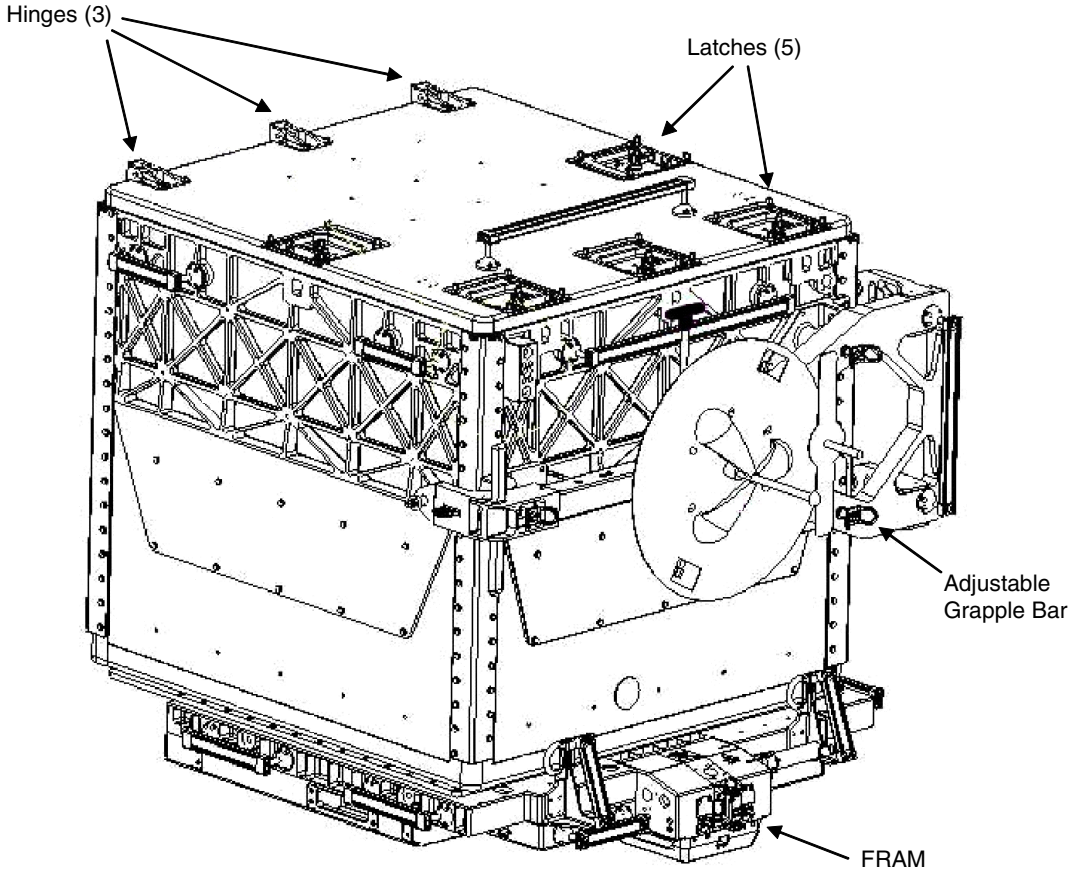

DDCU COLDPLATE (INSIDE SHOSS-ED BOX)

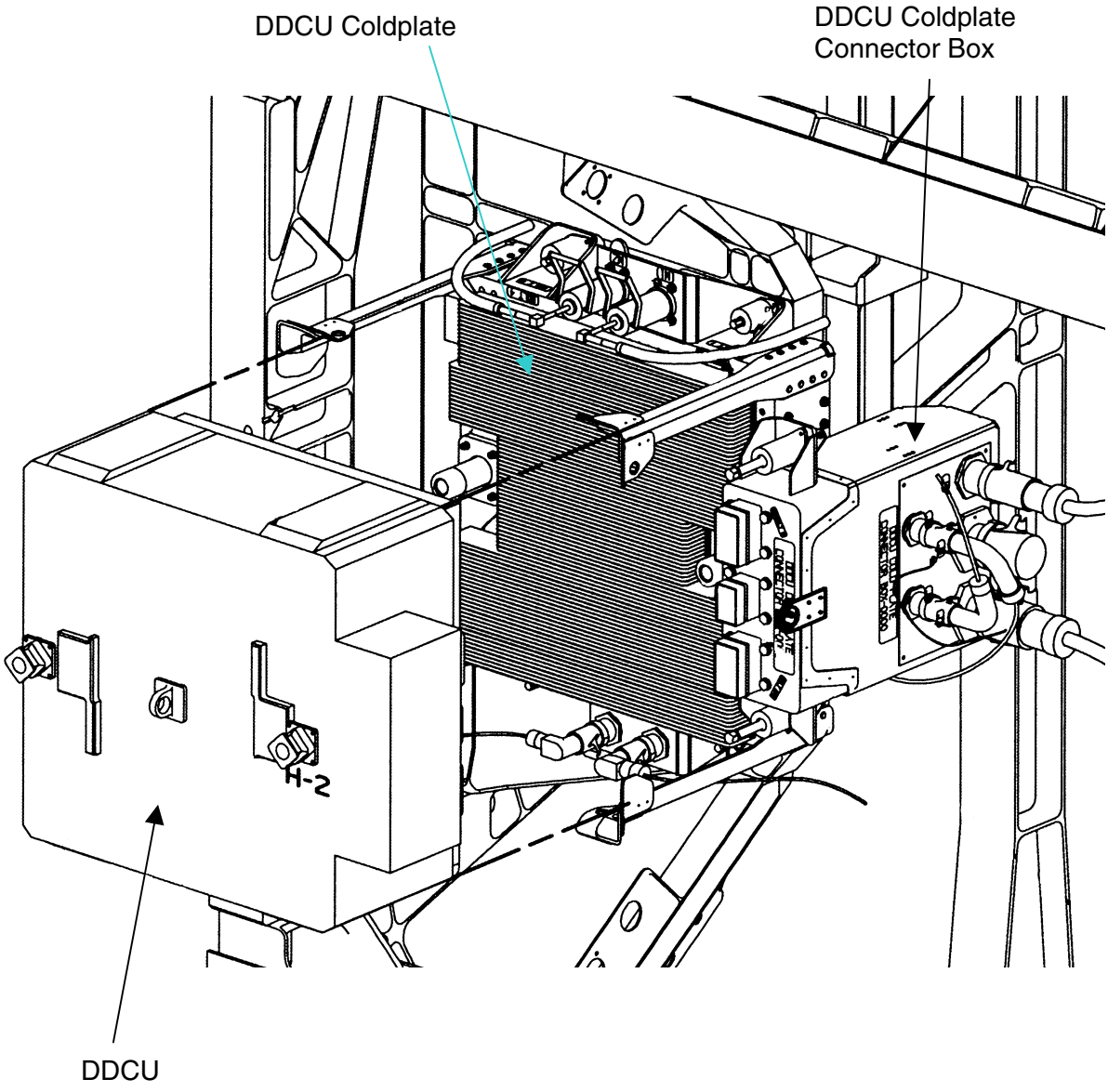

MBSU COLDPLATE (INSIDE SHOSS-ED BOX)

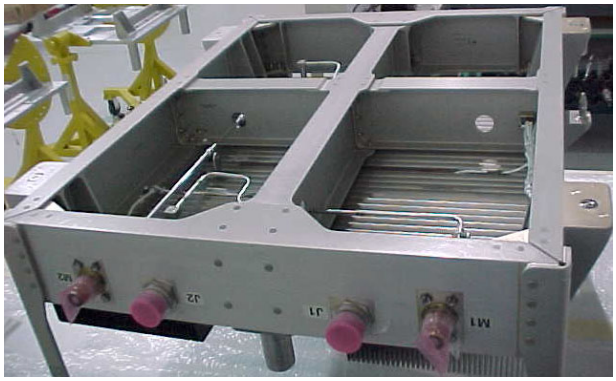

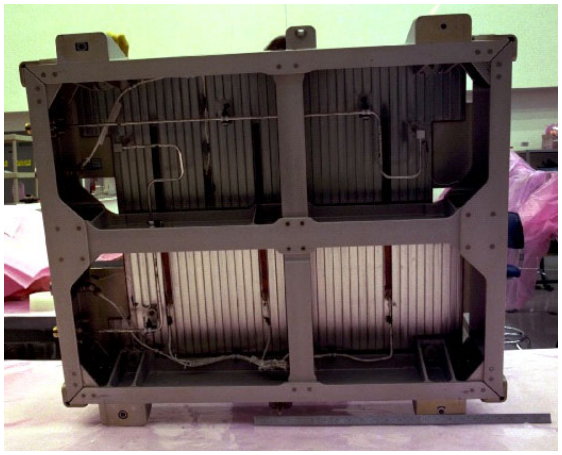

ADJUSTABLE GRAPPLE BAR

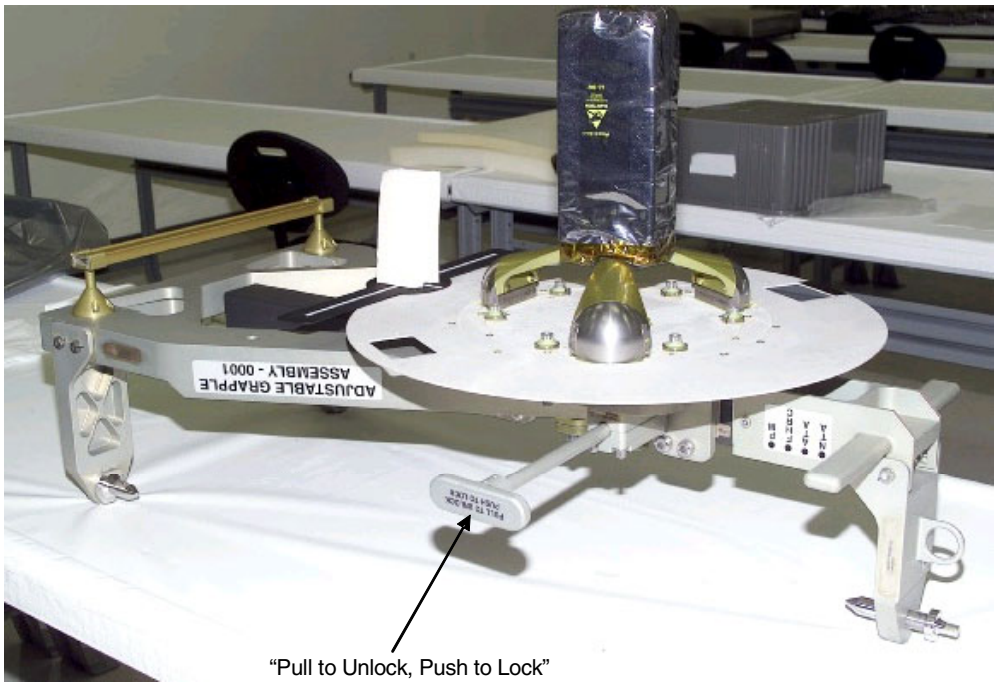

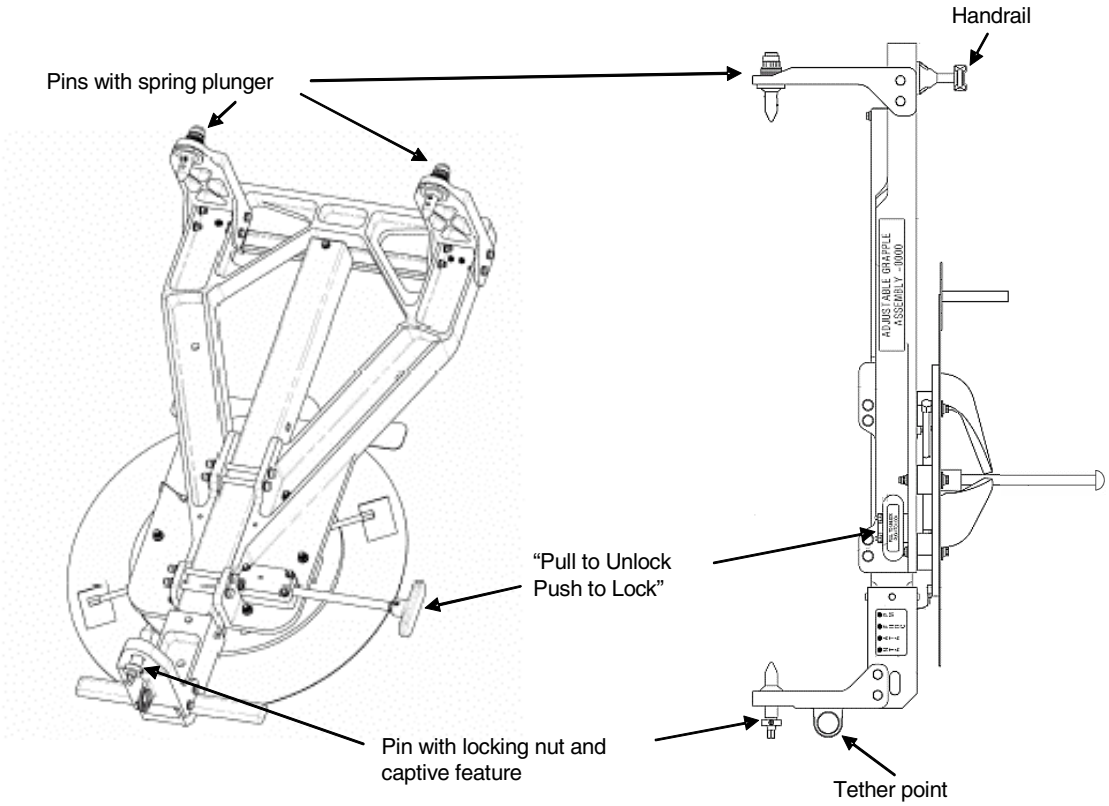

ADJUSTABLE GRAPPLE BAR PINS

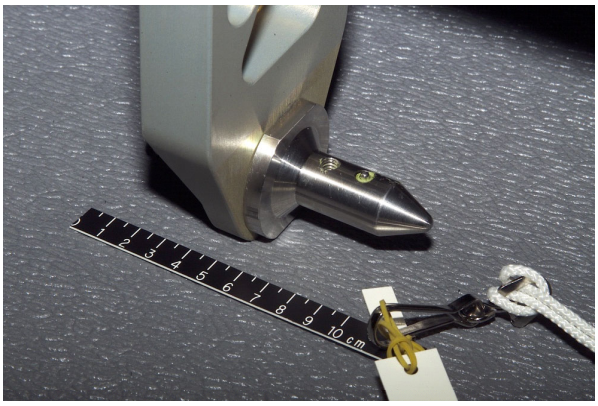

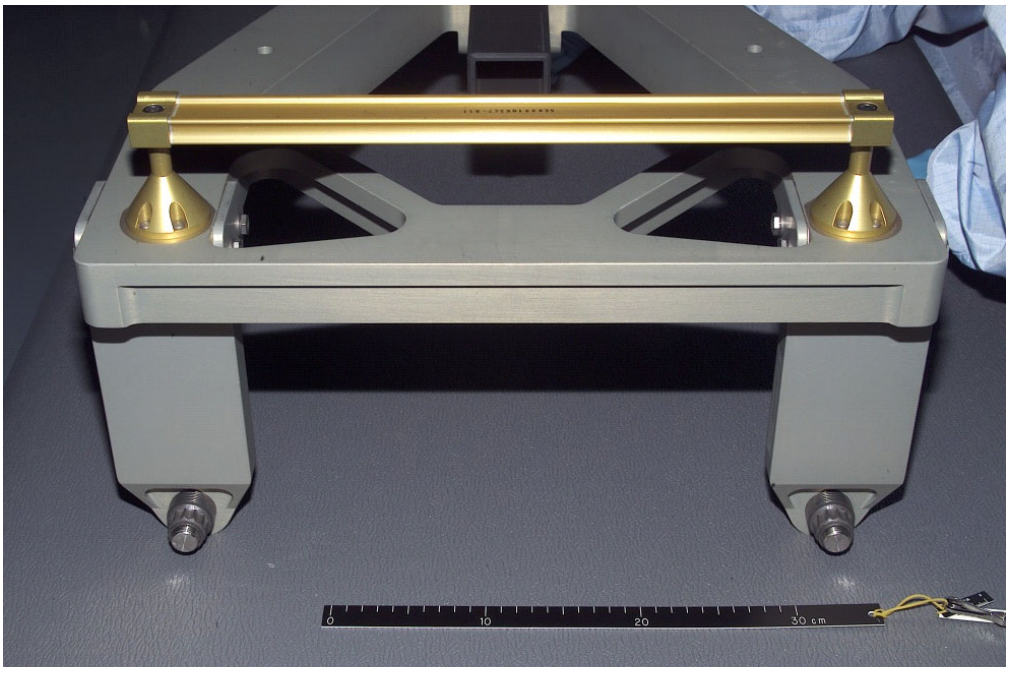

FGB MOUNTING PLATE

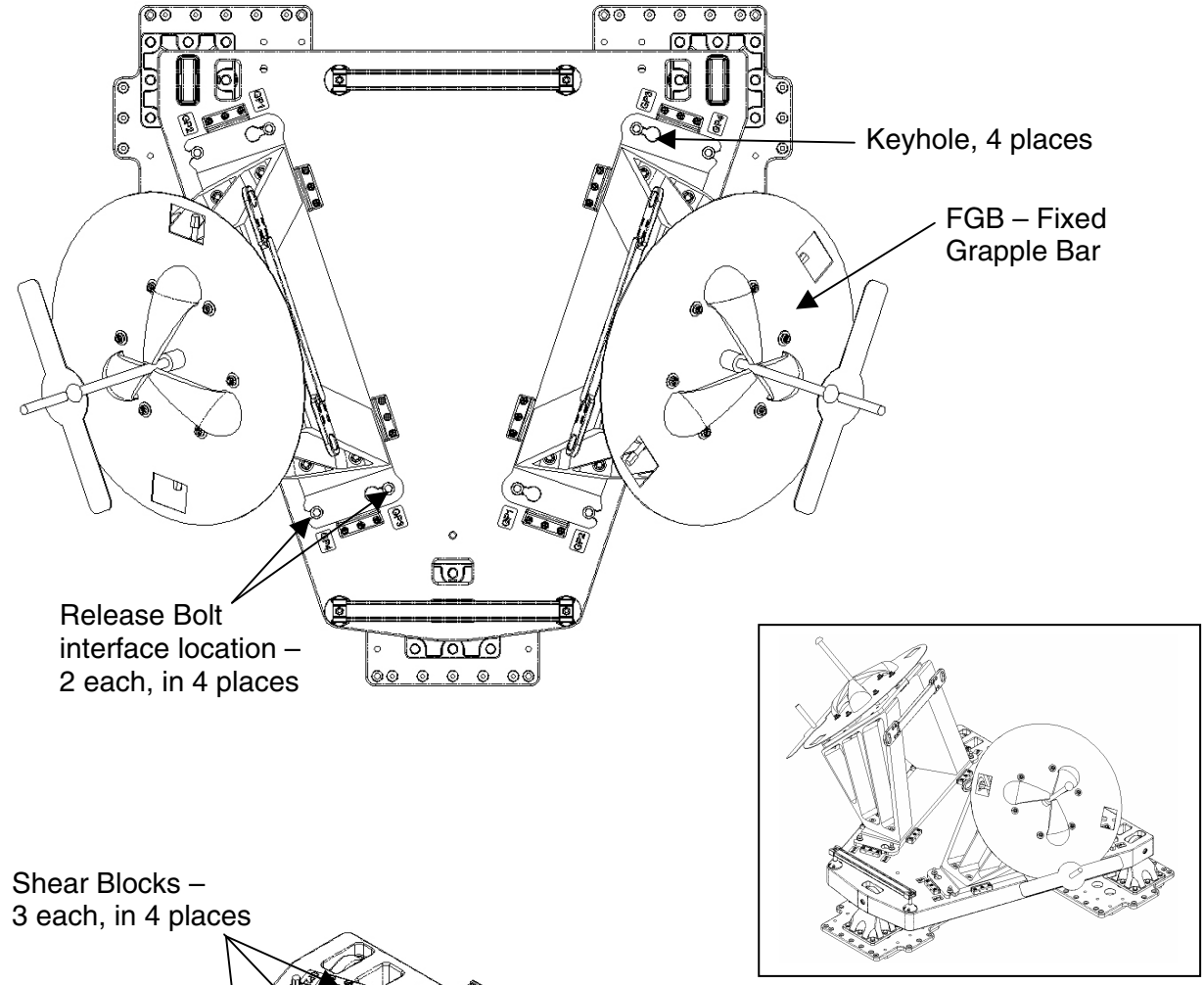

FGB Mounting Plate with no FGBs attached

FGB INSTALL LOCATION ON PUMP MODULE

FGB INSTALLED ON PUMP MODULE

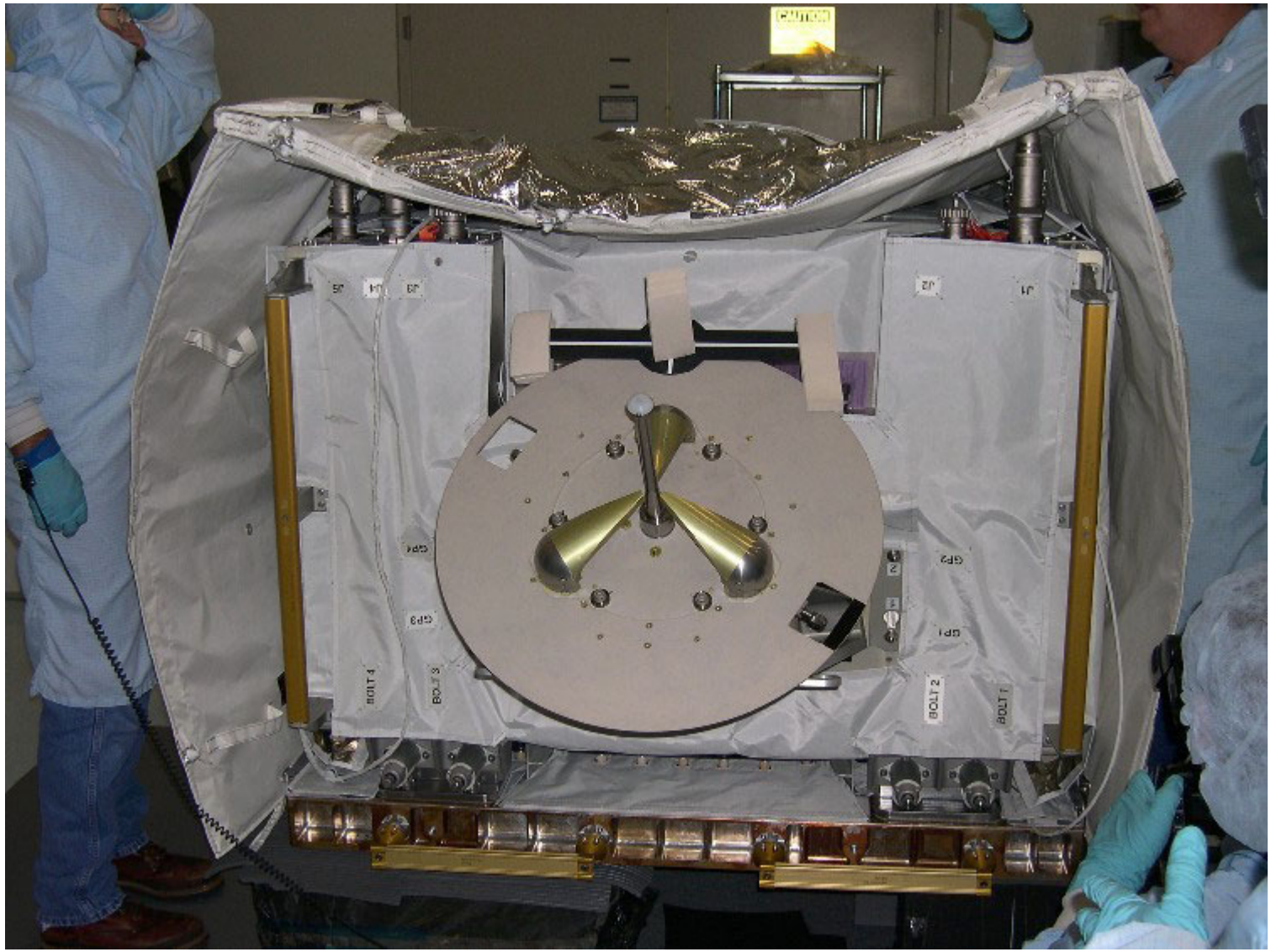

PLASTIC FGB BASE SIMULATOR (MOUNTED ON PUMP MODULE)

FGB Base Simulator

Detail of FGB Base Keyhole (3 places)

FRAM STRUCTURAL COMPONENT OVERVIEW

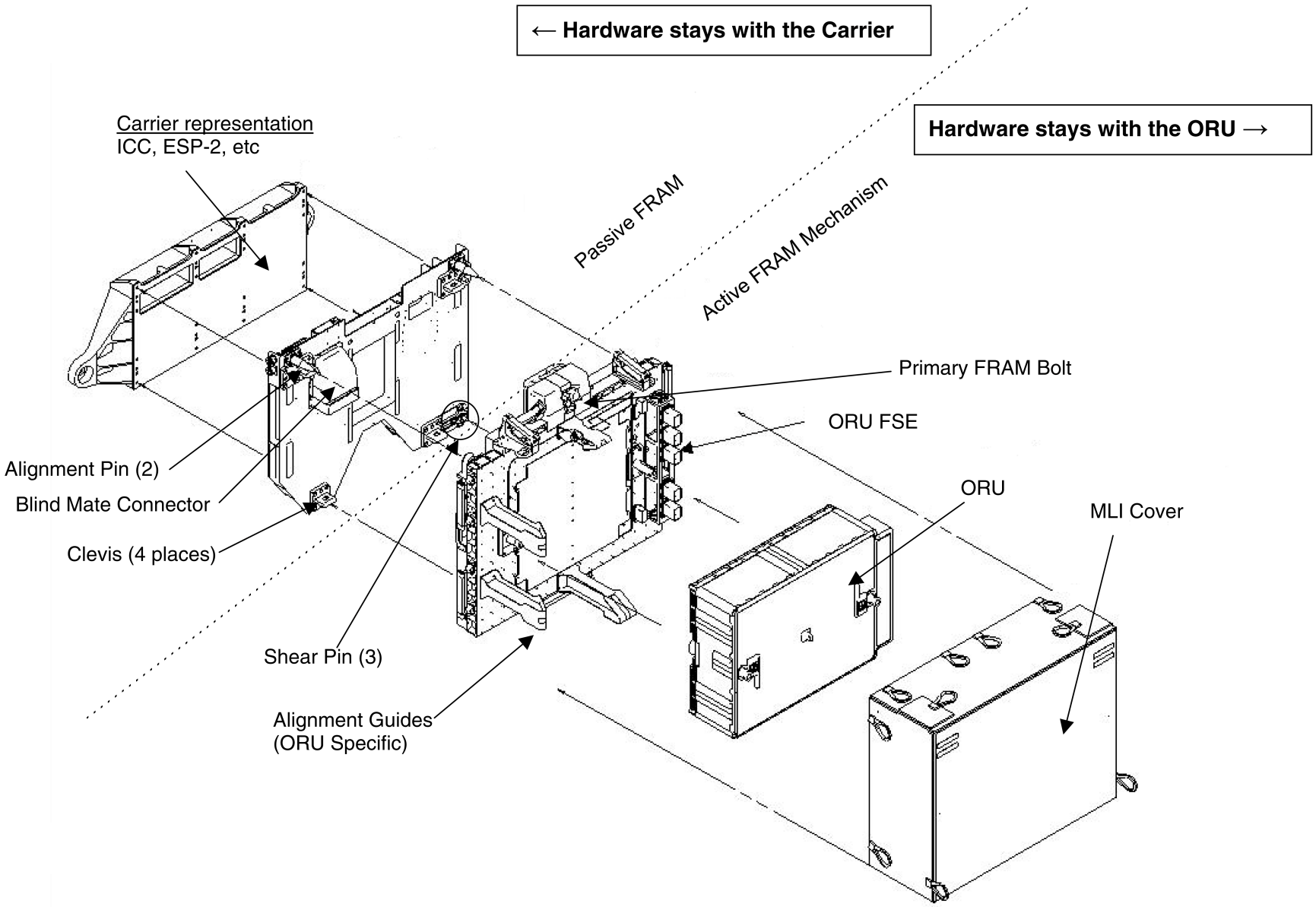

FLIGHT RELEASABLE ATTACHMENT MECHANISM (FRAM)

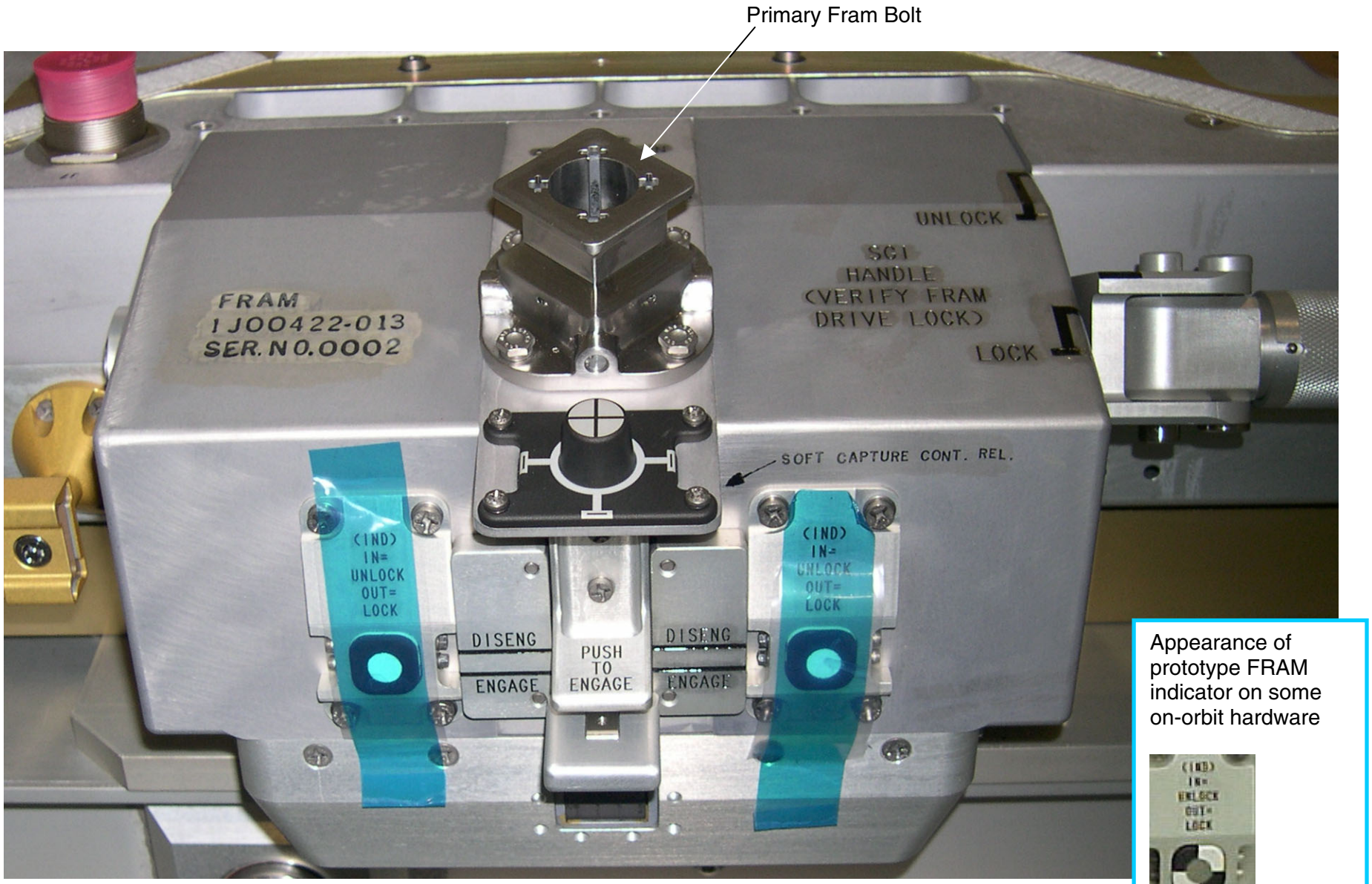

Appearance of prototype FRAM indicator on some on-orbit hardware

NOTE: On Primary FRAM indicator, “OUT” is extended 1/8 inch. “IN” is flush with the surrounding box

FRAM ACTIVE AND PASSIVE INTERFACES

Underside of Active FRAM (without covering)

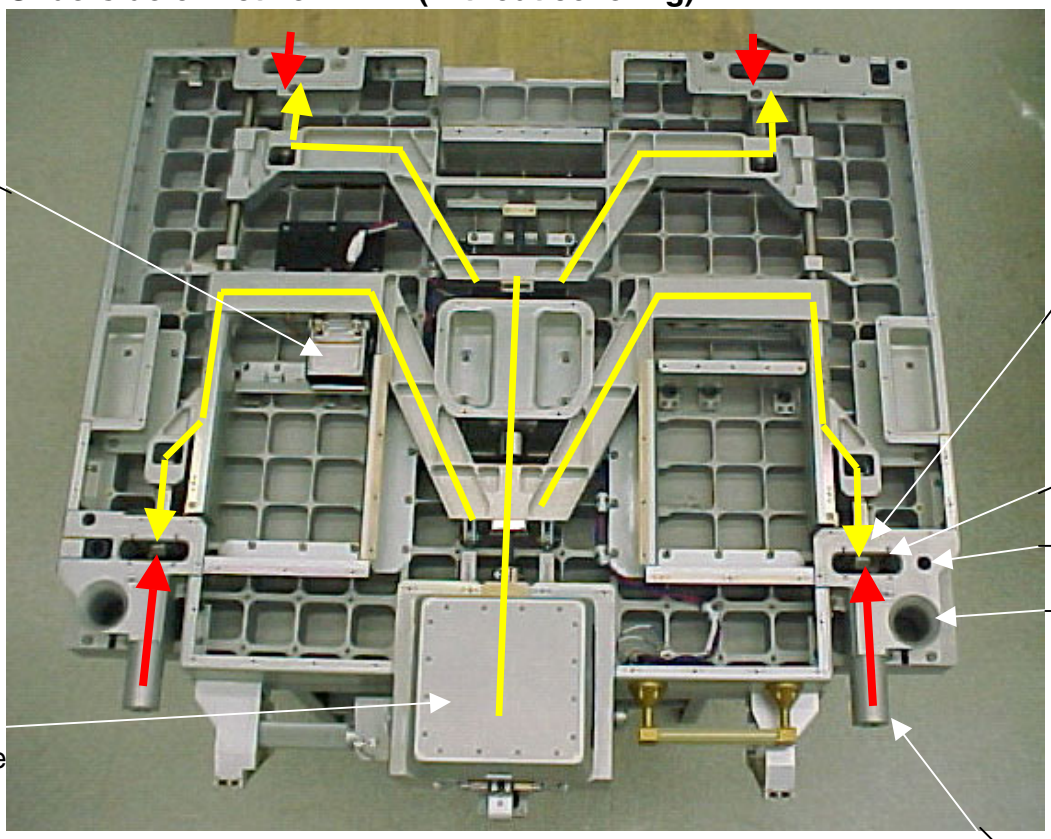

Passive FRAM (top side)

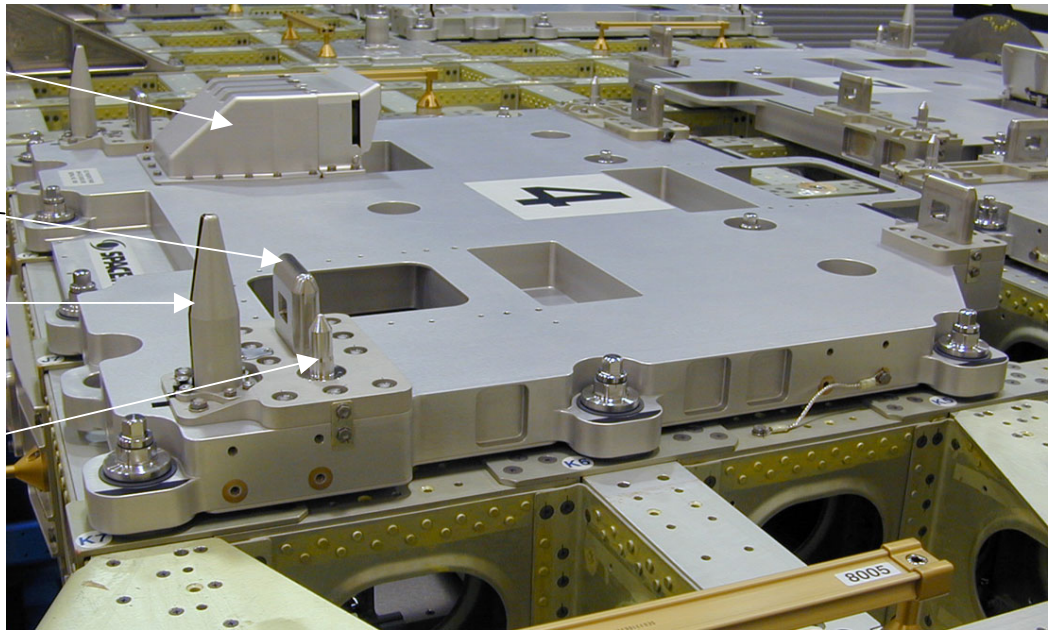

ACTIVE FRAM

Active FRAM (Top Side, Front)

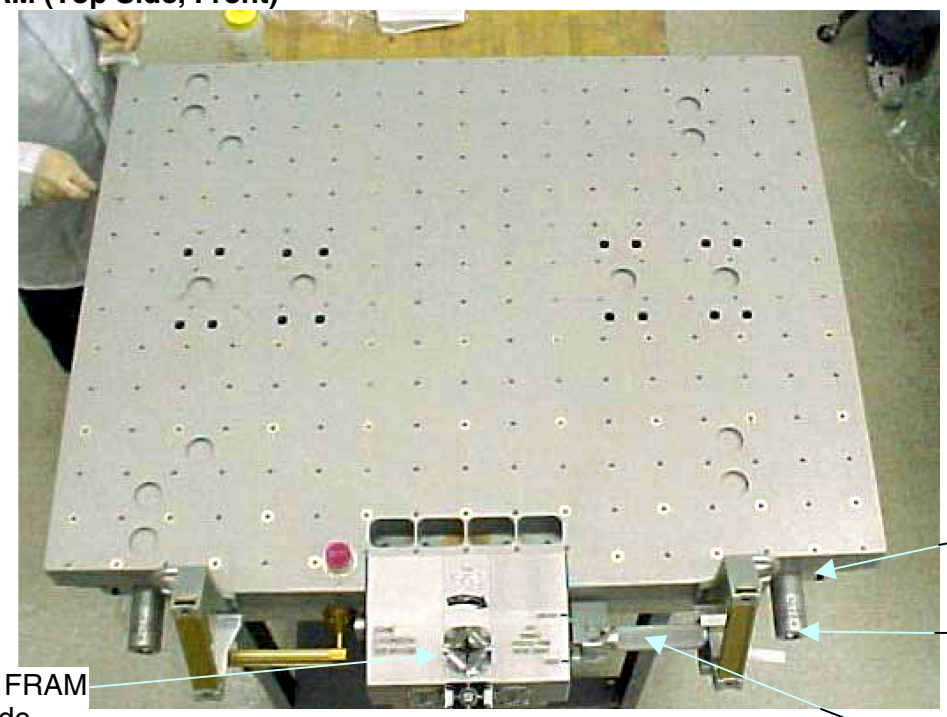

Alignment Stripe

Contingency Pin Bolt Interface

Primary FRAM Bolt inside Micro-square

SGI Contingency Release handle

SAPA (SHOSS-ED) Backside Contingency Pins

NOTE: Pump Module uses a LAPA with backside Contingency Pin interface similar to front side

VSSA STANCHIONS ON ESP2

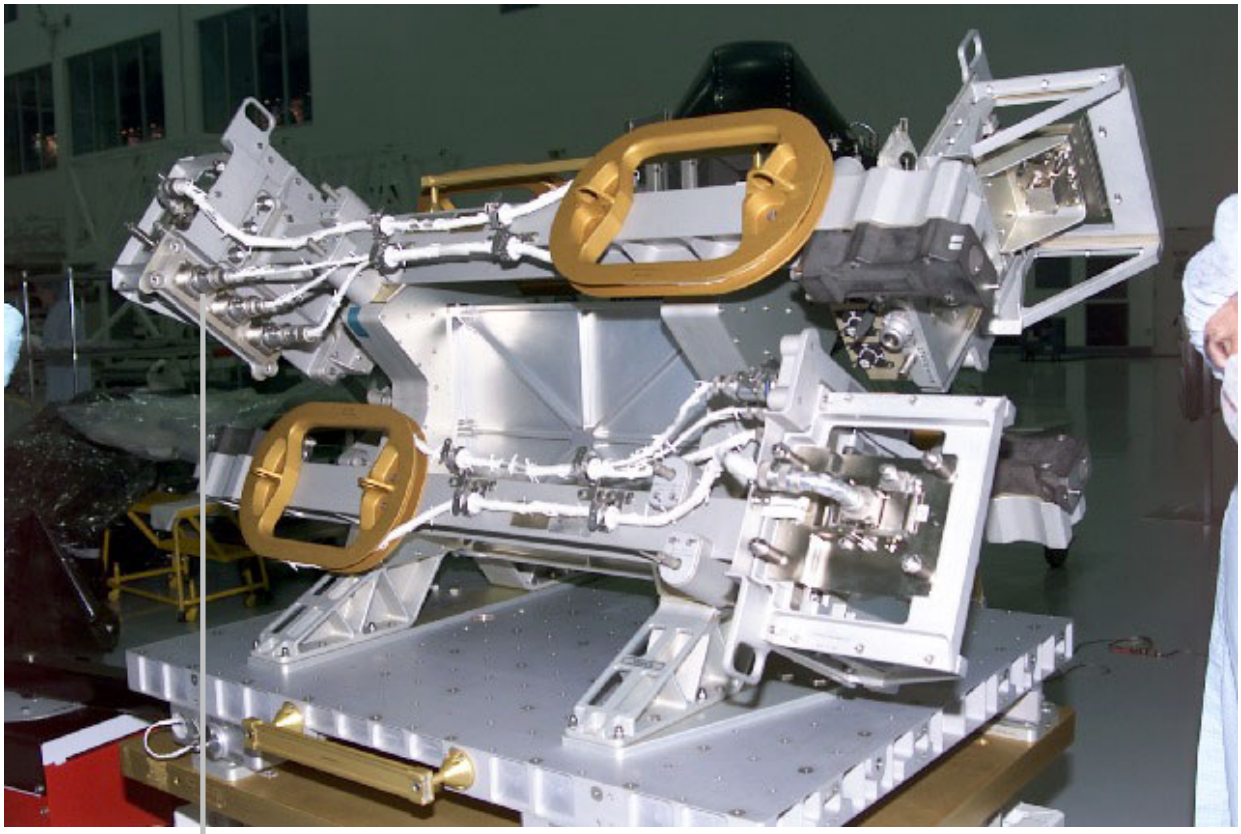

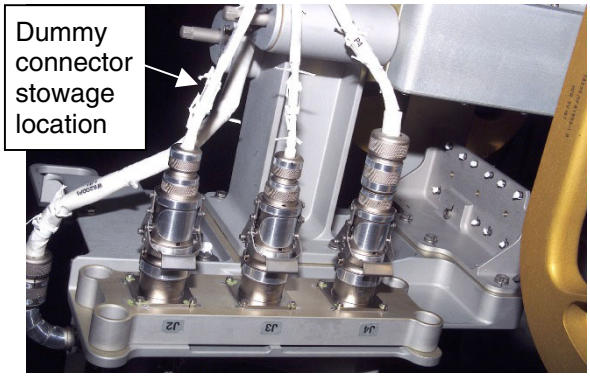

DETAIL OF STANCHION CONNECTORS

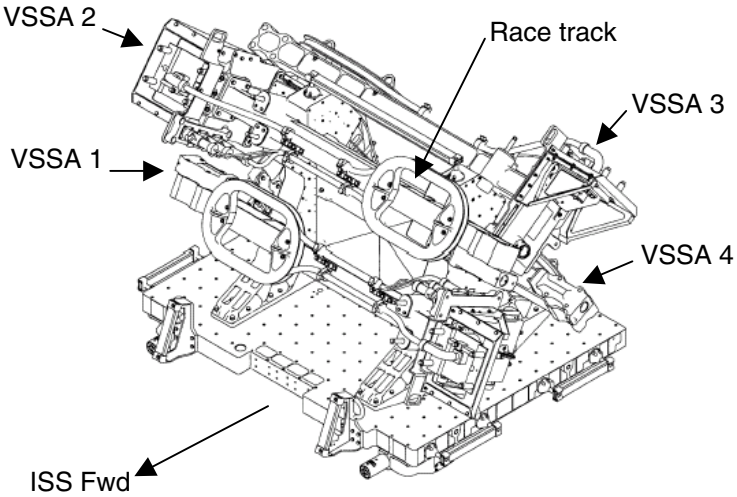

CAMERA INSTALL CP9

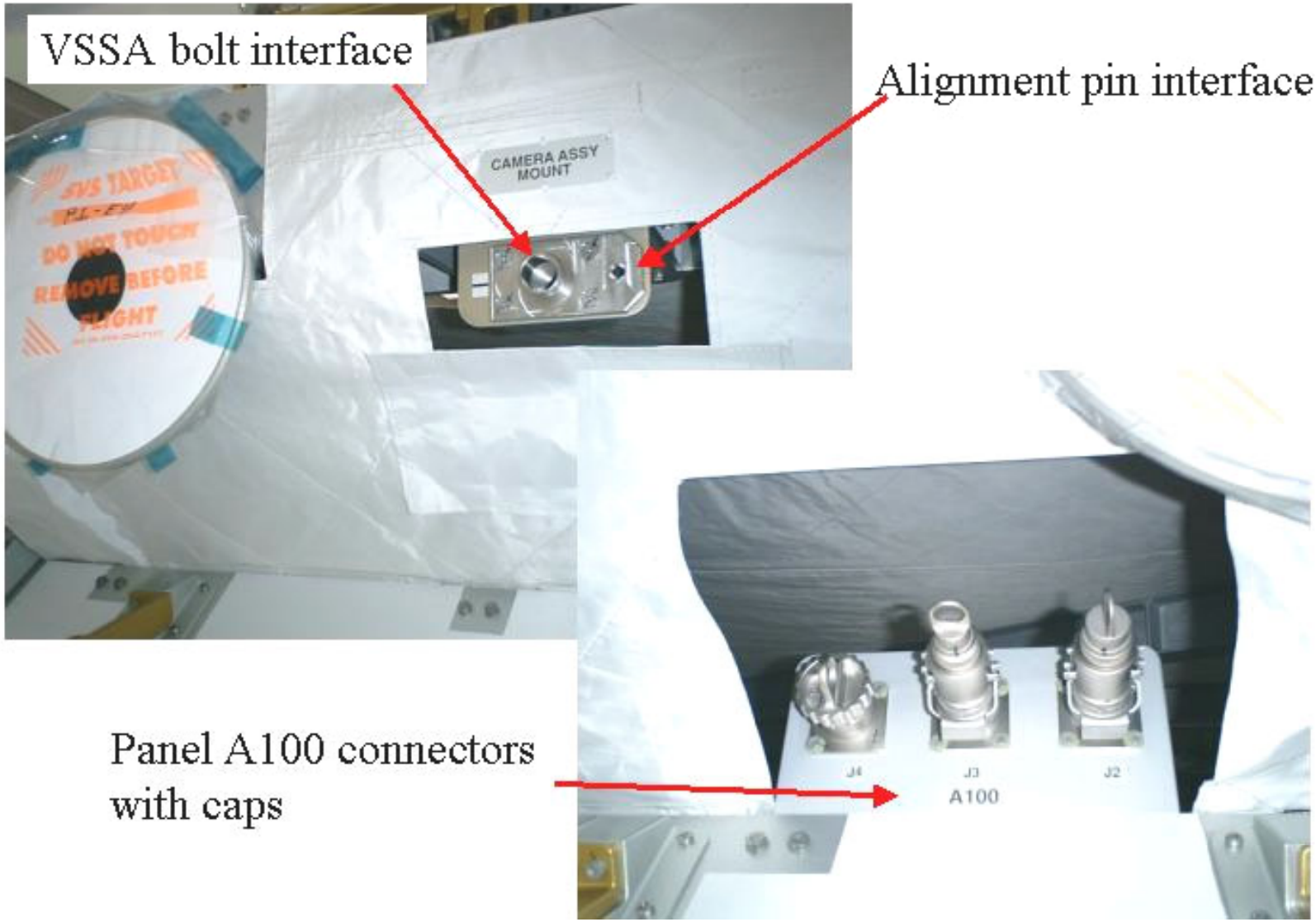

VIDEO STANCHION

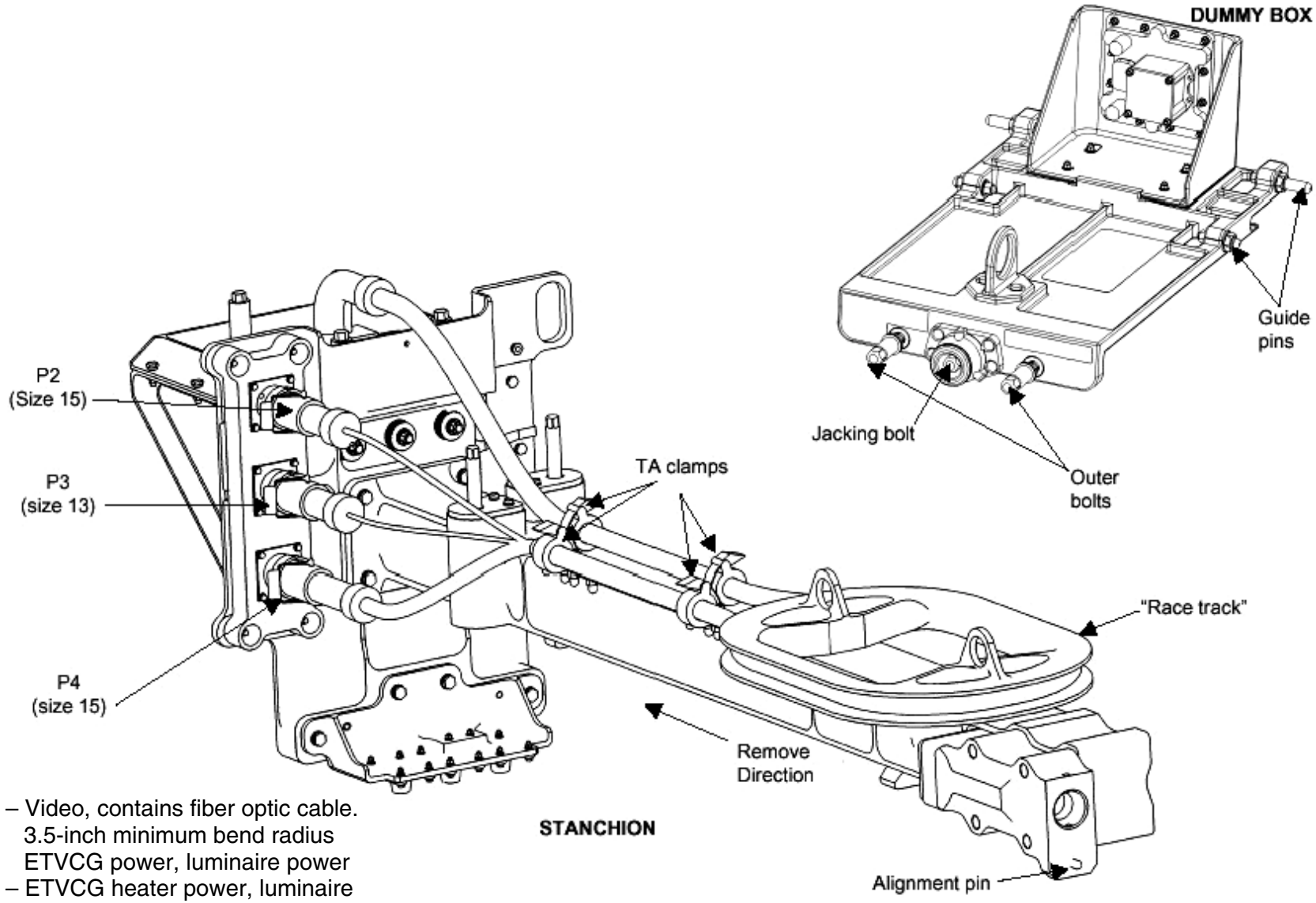

P2 – Video, contains fiber optic cable.
3.5-inch minimum bend radius
ETVCG power, luminaire power
P3 – ETVCG heater power, luminaire heater power
P4 – Data

VSSA DUMMY BOX

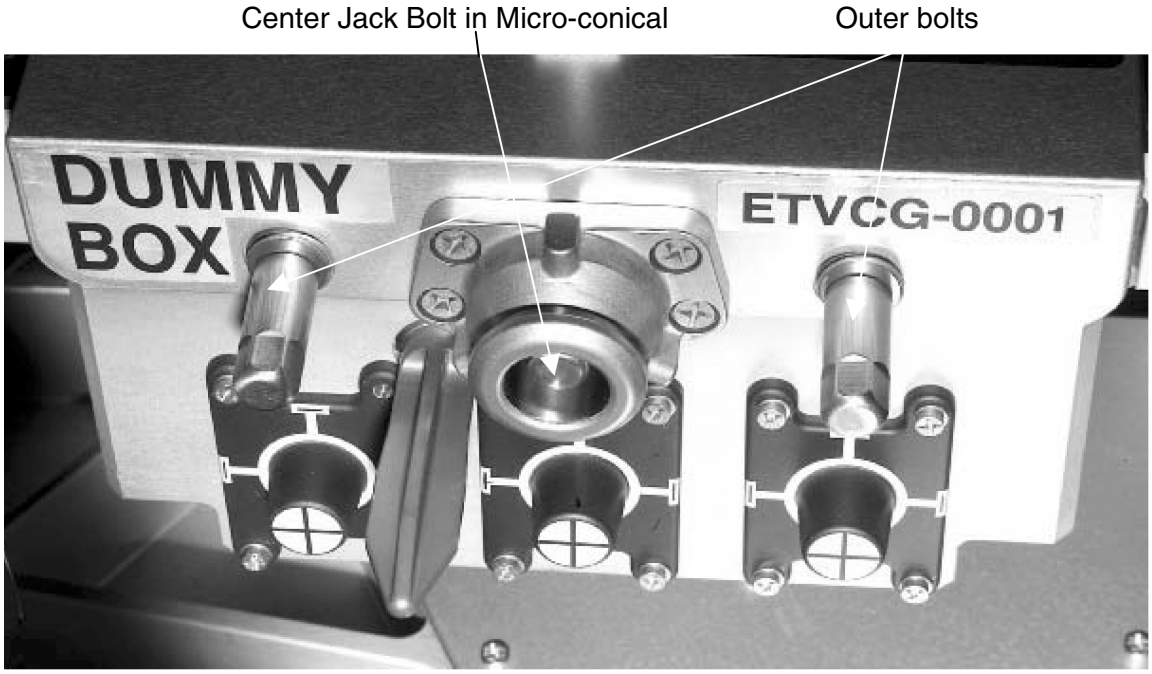

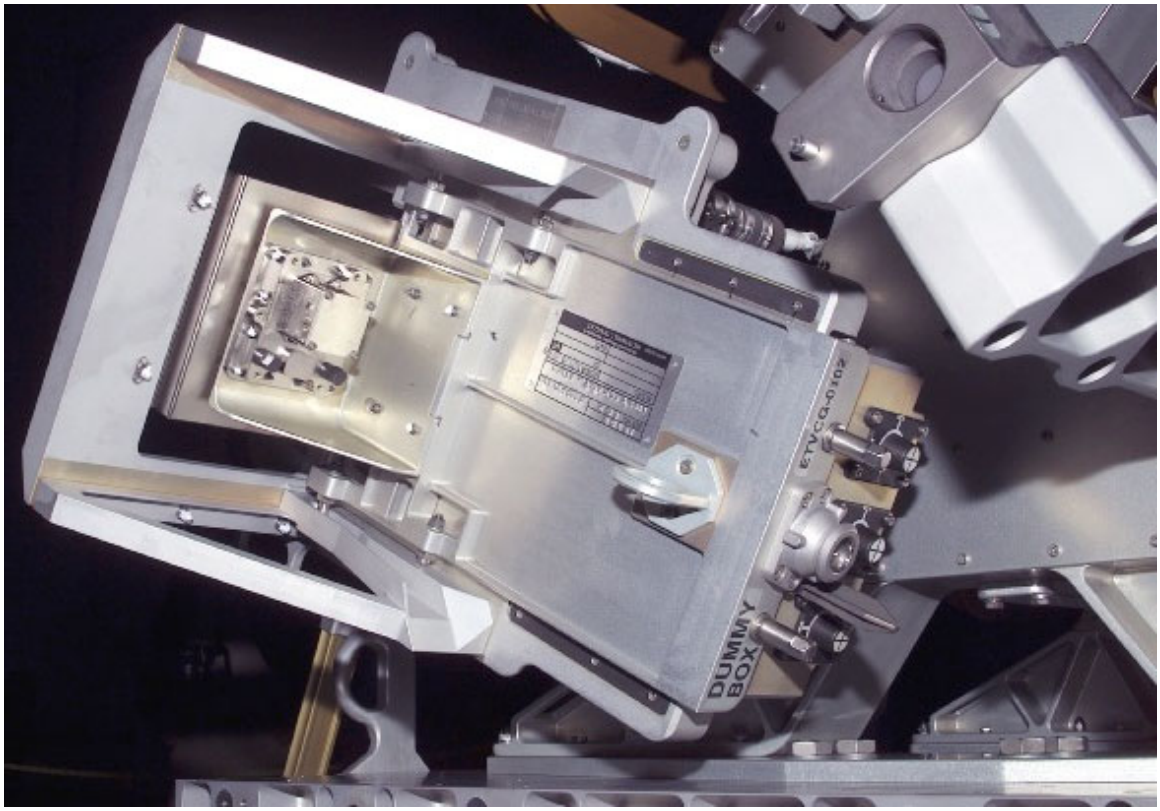

ETVCG COMPONENTS

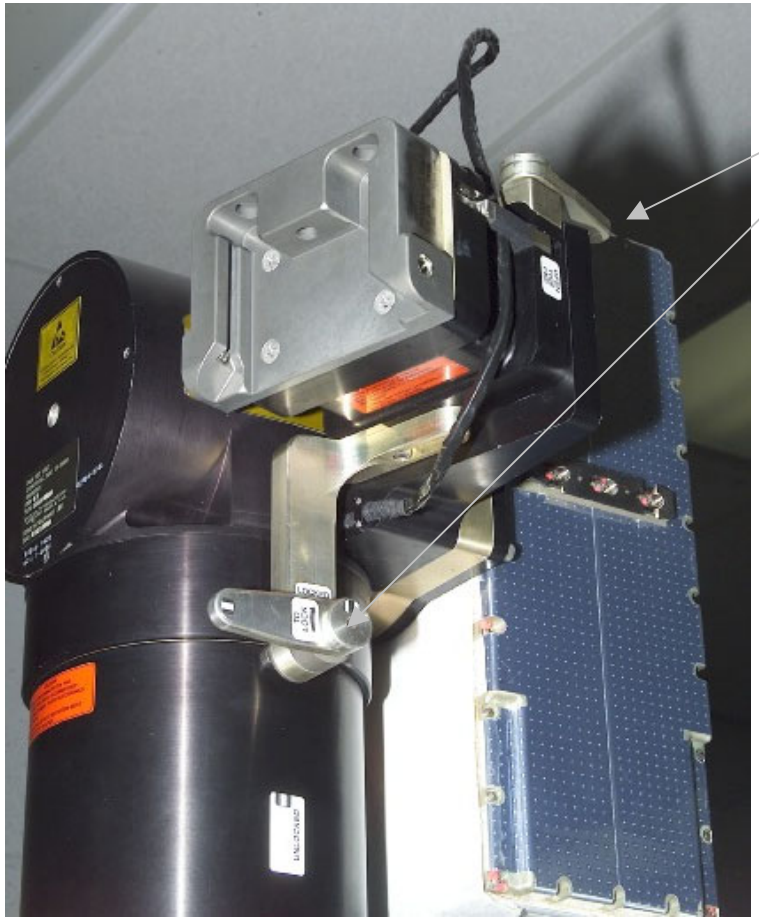

Pan (below) and Tilt (above)
Release Levers

Luminaire

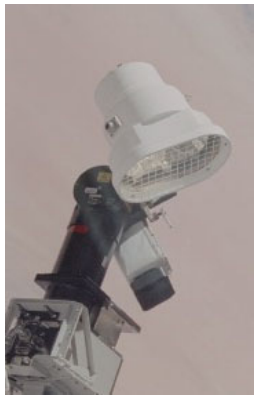

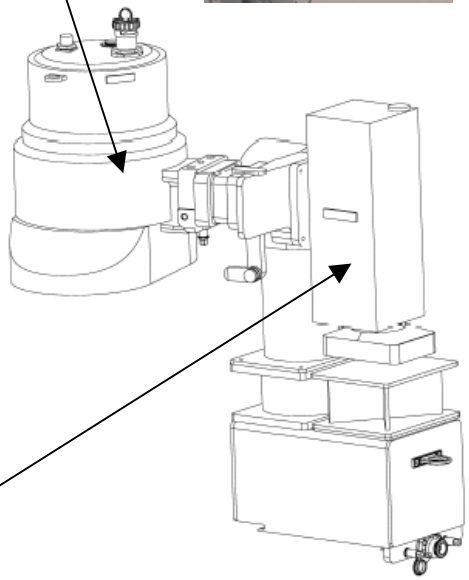

Camera

Outer bolts and center
Jack-bolt in Micro-conical

ETVCG PAN AND TILT RELEASE LEVERS

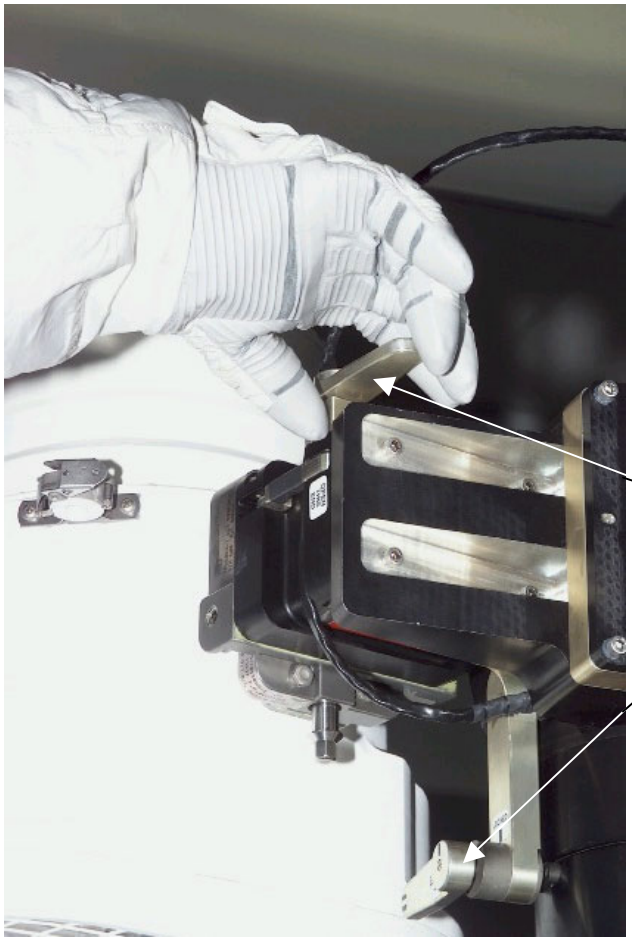

Release Levers
(90° rotation)

Detail of Release Lever
showing labels

LMC LAYOUT

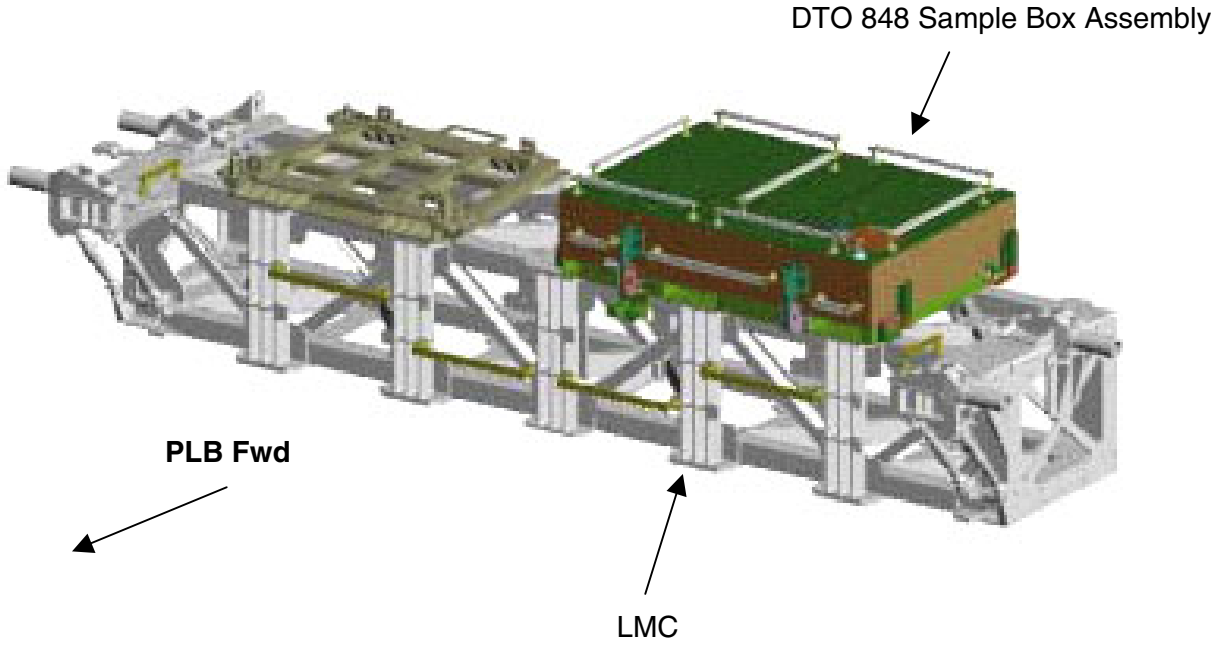
DTO 848 Sample Box Assembly
PLB Fwd
LMC

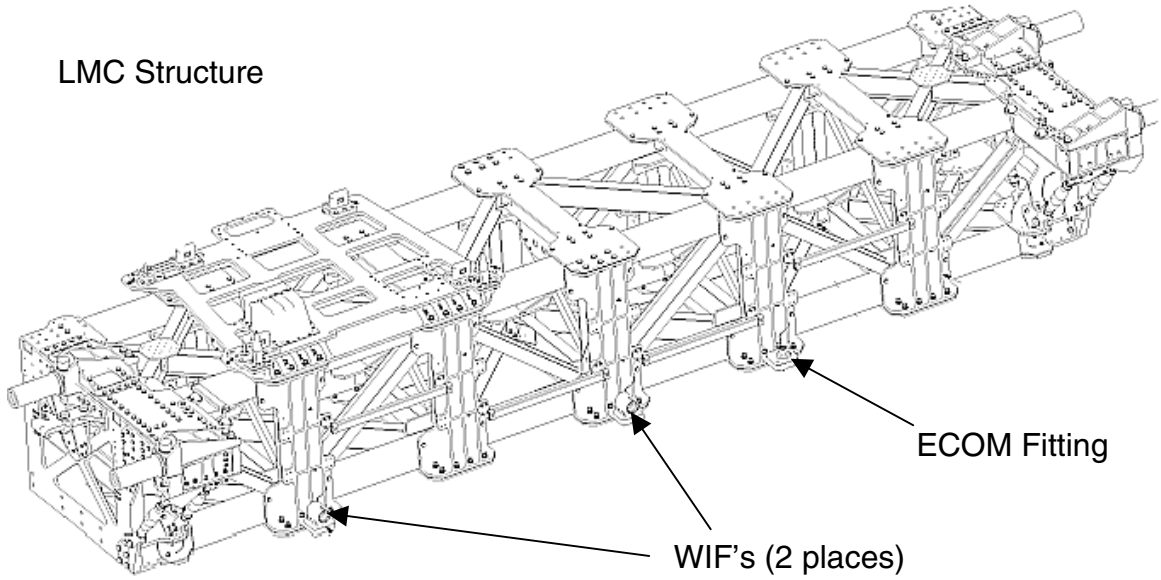
LMC Structure
ECOM Fitting
WIF's (2 places)

DTO 848 TPS REPAIR SAMPLE BOX

Top View

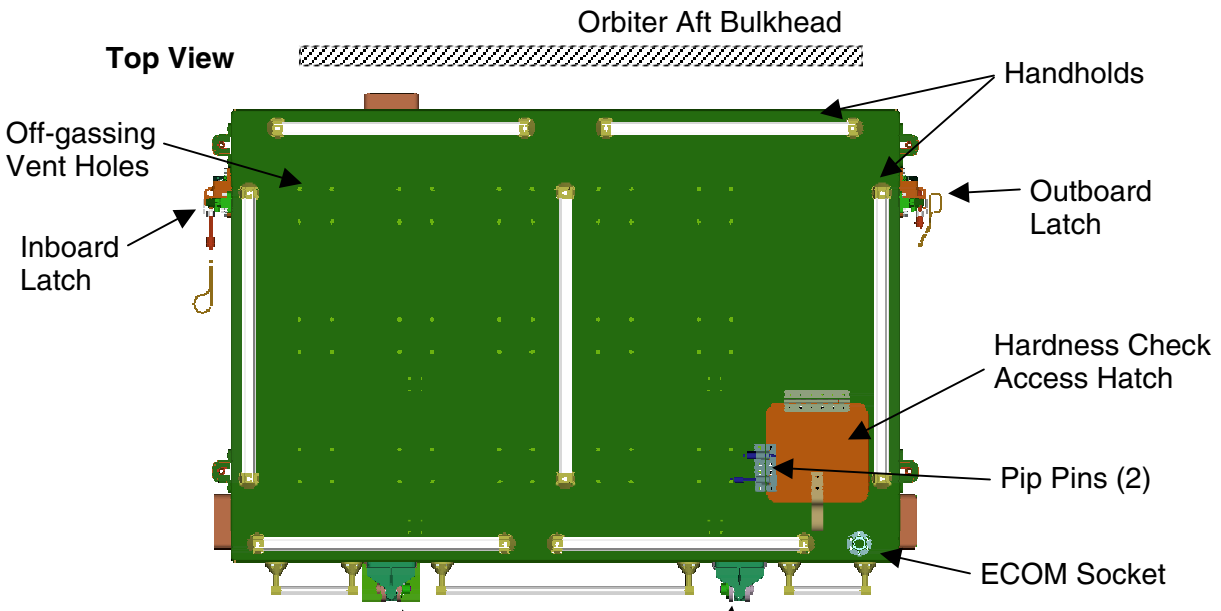

Front View

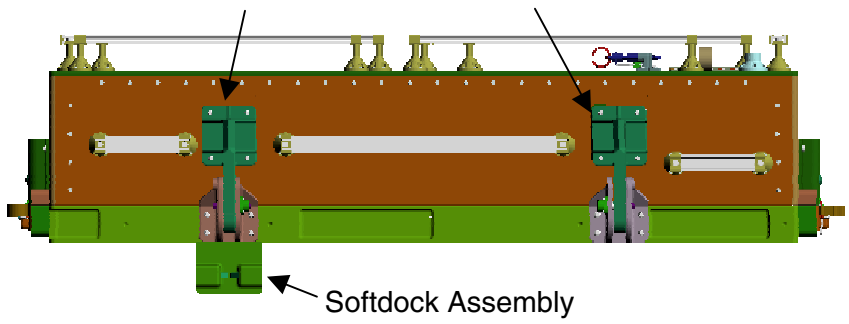

Inboard Side View (Outboard side view is mirror image)

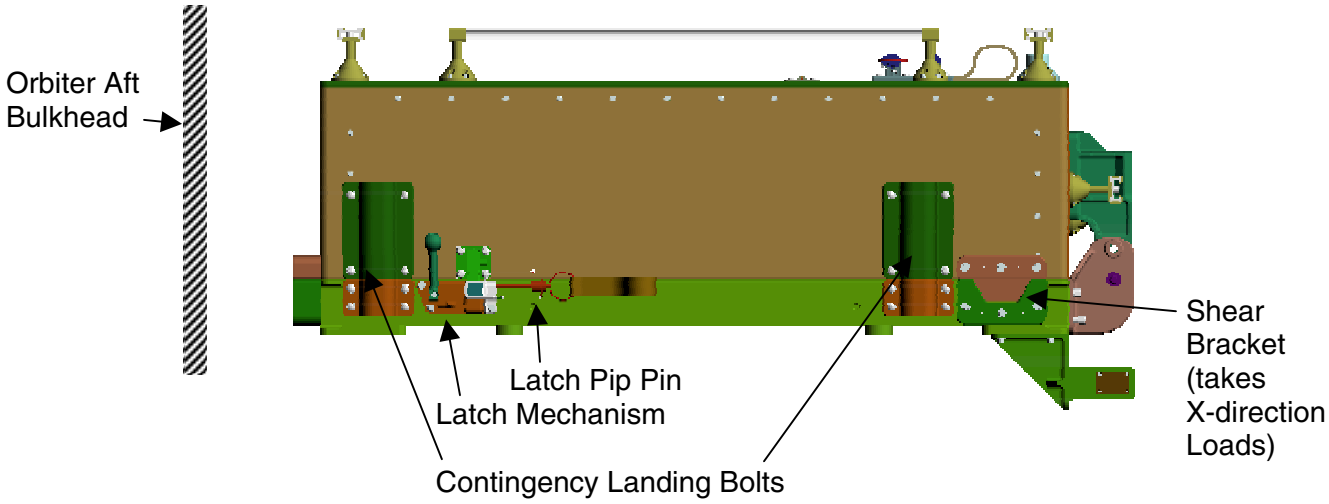

DTO 848 SAMPLE BOX ACCESS HATCH

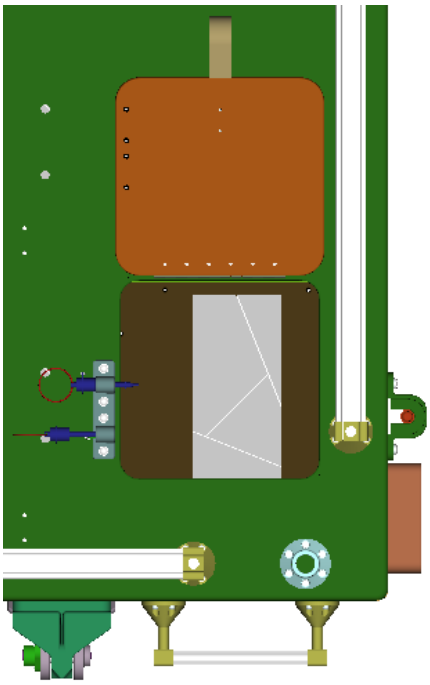

Allows access to a single tile sample for the Durometer Hardness Test

Pip Pins (2) with limited length lanyard preventing full removal of pins

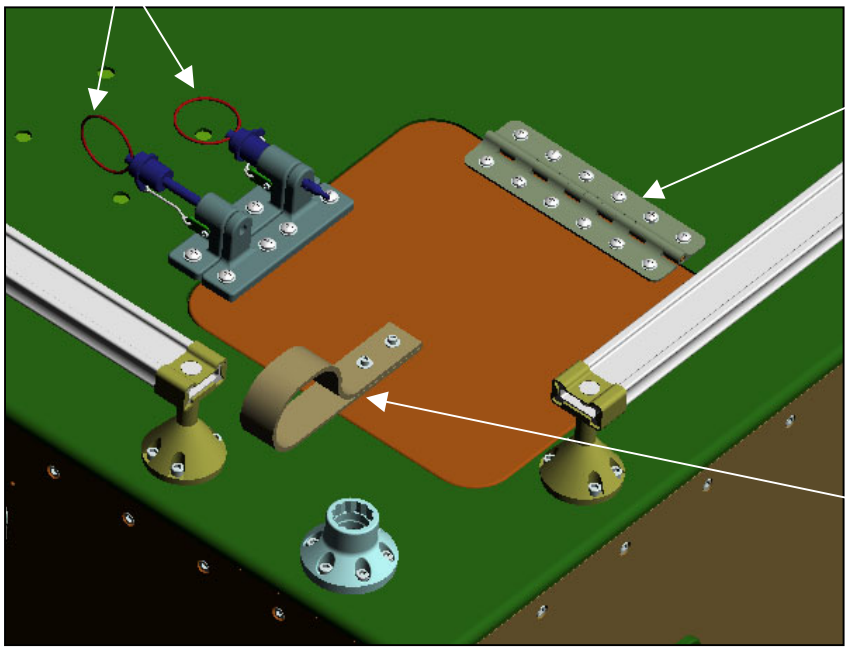

Hinge

Soft Loop Handle with Velcro to secure lid in open and closed positions

DTO 848 SAMPLE BOX COMPONENTS

Latch

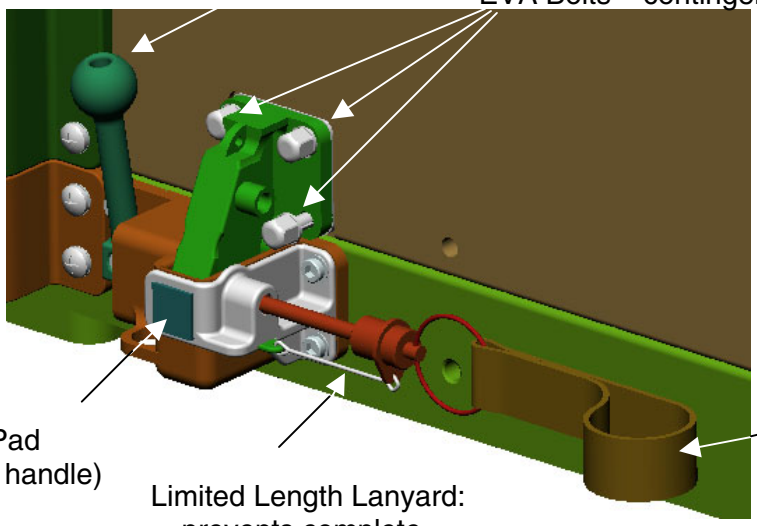

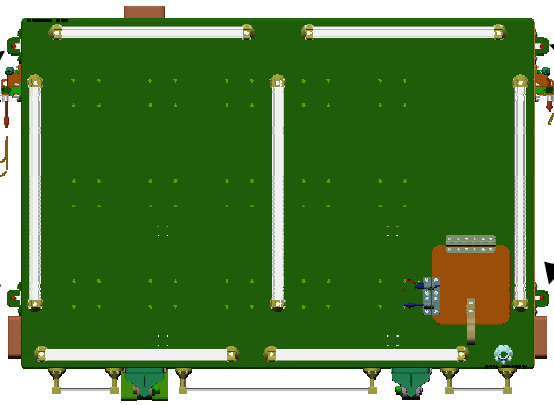

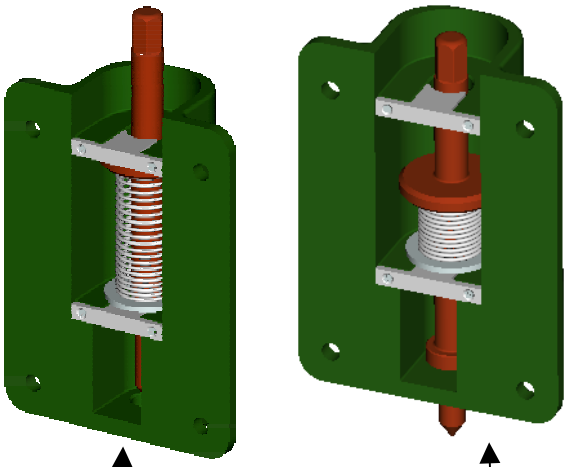

Contingency Landing Bolt detail

DTO 848 SAMPLE BOX COMPONENTS (Cont)

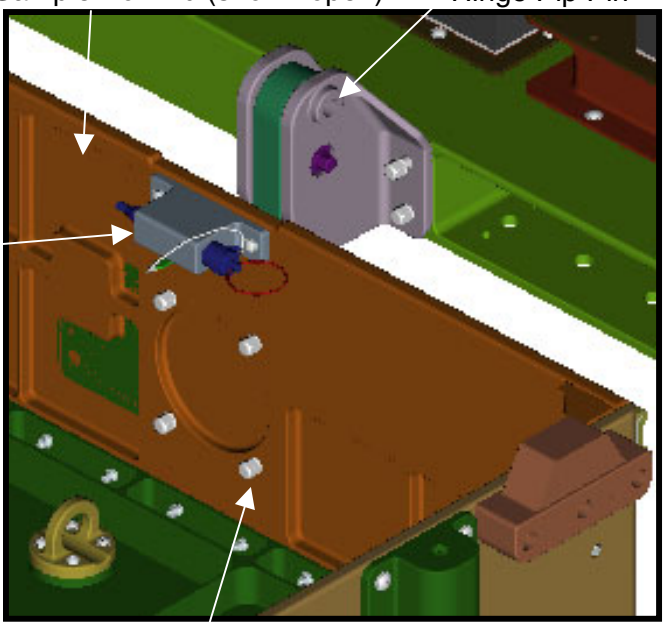

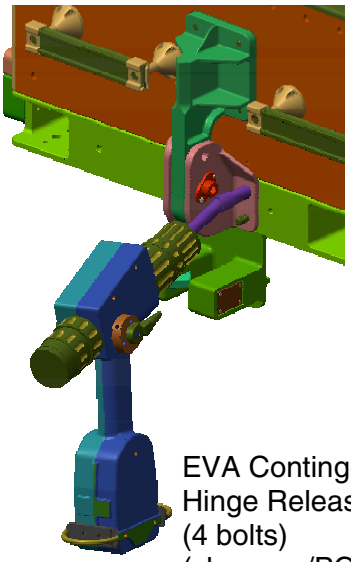

Soft Dock – retains lid in open position prior to locking with pip pins

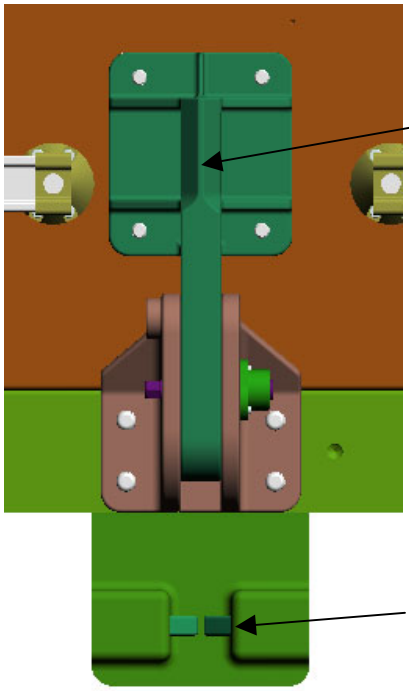

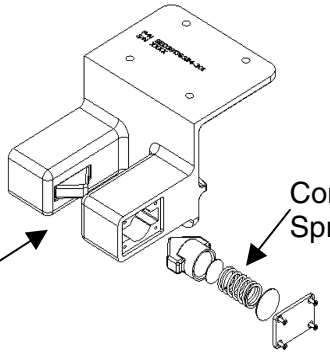

DTO 849 WS STABILIZATION LOAD CELL CONCEPT

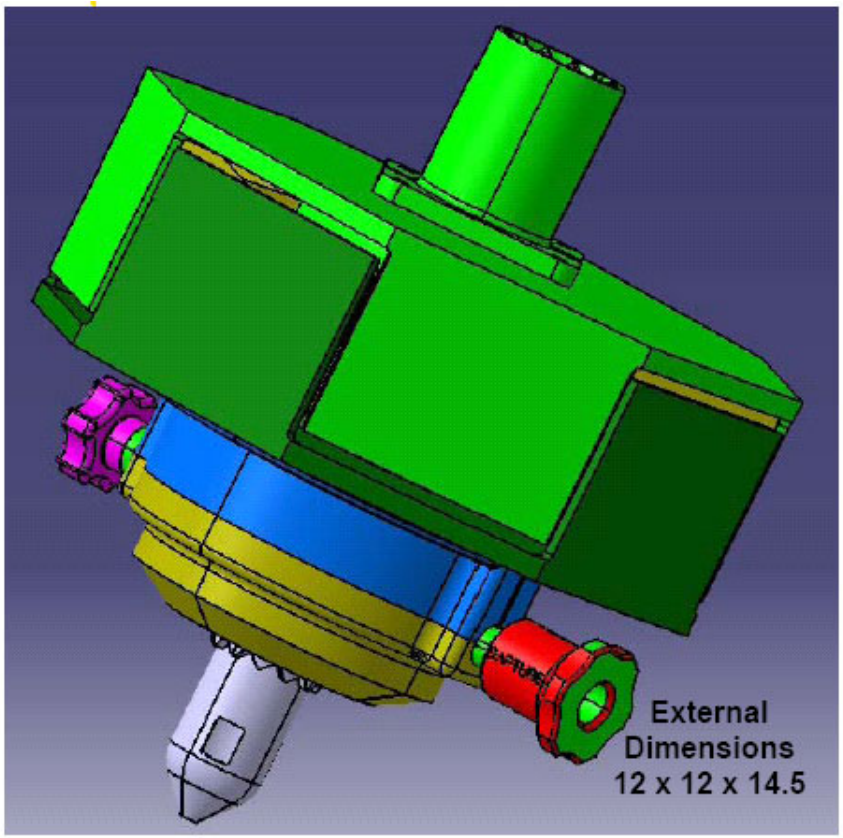

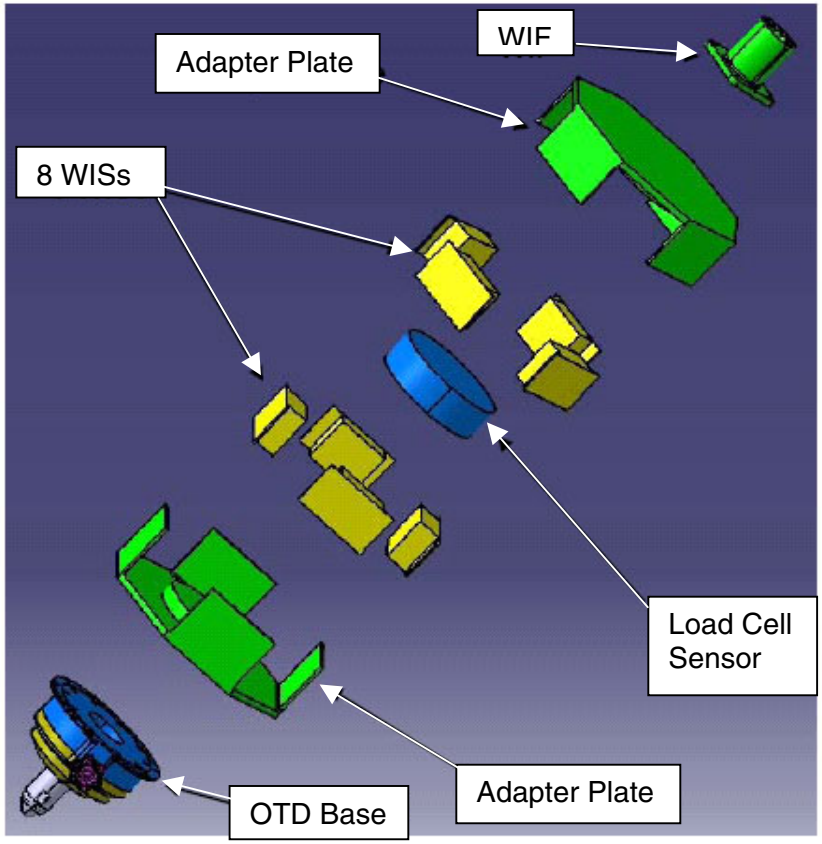

WIS – Wireless Instrumentation System
OTD – ORU Transfer Device (EVA Crane)
Worksite – Interface

Space Shuttle Program
FLIGHT DATA FILE

JSC-48024-121
BASIC

SPACE SHUTTLE

EVA CHECKLIST

STS
121

Flight Cover (trim bottom to expose tabs)