STS-132 / ULF4

FD 12 Execute Package

MSG	Page(s)	Title
100	1 - 15	FD12 Flight Plan Revision
101	16 - 17	FD12 Mission Summary
102	18 - 23	Landing Weather Forecast
103	---	FD12 PAO Event Summary (electronic only)
104	24	FD11 MMT Summary
105	25 - 26	Entry Fluid Loading
106	27 - 30	Cabin Stow Message
107	31	Photo/TV Reference for SIMPLEX ops

Approved by FAO:

J. Mintz

Last Updated: May 25 2010 2:15 AM GMT

JEDI *(**J**oint **E**xecute package **D**evelopment and **I**ntegration), v3.0*

FD 12 Handover from Orbit 3 to Entry Team:

THIS PAGE INTENTIONALLY BLANK

MSG INDEX

MSG NO.	TITLE
100	FD12 Flight Plan Revision
101	FD12 Mission Summary
102	Landing Weather Forecast
103	FD12 PAO Event Summary
104	FD11 MMT Summary
105	Entry Fluid Loading
106	Cabin Stow Message
107	Photo/TV Reference for SIMPLEX ops

1. Post-Sleep Cryo Config

For today's post-sleep cryo config, O2 tanks 2 and 3, and H2 tanks 2 and 5 will be active. We are expecting to deplete H2 tank 5 today; you can expect realtime calls to reconfigure tanks following depletion.

R1 O2,H2 MANF VLV TK2 (two) - OP (tb-OP)
H2 TK3 HTRS A,B (two) - OFF

A15 CRYO TK5 HTRS H2 A,B (two) - AUTO

Pre-Sleep Cryo Config

√MCC for deltas prior to configuring for pre-sleep.

For tonight's pre-sleep cryo config, manifold 1 will be closed with O2 and H2 tanks 1 and 3 active.

R1 O2 TK1 HTR A - AUTO
TK2 HTR A - OFF
H2 TK2 HTRS A,B (two) - OFF
TK3 HTRS A,B (two) - AUTO
O2,H2 MANF VLV TK1 (two) - CL (tb-CL)

2. Outlook Words for CDR
Ken, you have one e-mail in your Outlook inbox that is quite large. If you would, please move it to a personal folder or delete it prior to mid morning. This will help us turn around the mail synch more quickly.

3. Final Mail Synch
As a part of your final mail synch today, we will downlink your Outlook Personal Folders so that you may have them when you return to Houston. Please move any messages that you would like to keep from your INBOX, SENT ITEMS and UPLINKED BY CAPCOM folders to your Personal Folder before MET 10/20:30. We will also perform one final mail synch at the same time to deliver any messages you want to send.

4. Imagery Flash Card Stowage
   In order to expedite efforts to recover the inadvertently deleted images taken on FD10, please have the affected flash card (previously marked and bagged) readily available to hand to the ASP postlanding for return to Houston.

5. Micro-2 GAP TERMINATION
   For today's termination of Micro-2 GAPs M1-M10, please take a photo of each GAP prior to termination. The GAP orientation should be such that the field of view includes the ACTIVATION and TERMINATION lines.

   While terminating the GAPs in GAP TERMINATION (ASSY OPS, PAYLOADS) step 6.4, please slowly rotate the crank until the hard stop is reached.

6. GPS 2 Recovery
   Just prior to crew sleep, GPS experienced a YETI (Y-Code Erroneous Tracking Incident) on channel 2. This condition causes that channel of the GPS to be unable to track Y-code, slightly degrading the accuracy of the GPS. This is a known issue with the GPS firmware. Even with this condition, the GPS is still certified for entry. This condition is easily corrected by reinitializing the GPS, and moding it back to NAV. These steps have been added to the timeline just before FCS Checkout.

7. REPLACE PAGES 2-39 THROUGH 2-41 AND 3-126 THROUGH 3-135.

REPLANNED

FD11

GMT 05/24/10 (144) 19 20 21 22 23 05/25 01 02 03 04 05 06

MET Day 010 010/00 01 02 03 04 05 06 07 08 09 10 11 12

FD12

STS-132

CDR Ham	PRE SLP	RMC A/G	PRE SLEEP	SLEEP	POST SLEEP
PLT Antonelli	PRE SLEEP			SLEEP	LOG / POST SLEEP
MS1 Reisman	PRE SLEEP			SLEEP	LOG / POST SLEEP
MS2 Good	PRE SLEEP			SLEEP	POST SLEEP / EXERCISE
MS3 Bowen	LDRI / DOWNLINK	PRE SLEEP		SLEEP	LOG / POST SLEEP
MS4 Sellers	PREP / SLEEP	OCA*	PRE SLEEP	SLEEP	LOG / POST SLEEP

DAY/NIGHT

ORBIT: 159 160 161 162 163 164 165 166 167

TDRS W E Z

ORB ATT: -ZLV -XVV

*RATE RCNFG

NOTES

REPLANNED

FD12
GMT 05/25/10 (145)

MET Day 010 — 12 07 13 08 14 09 15 10 16 11 17 12 18 13 19 14 20 15 21 16 22 17 23 18 011/00

STS-132

| | | |

REPLANNED

FD12

GMT 05/25/10 (145)

MET Day 011

		011/00	19	20	21	22	23	05/26	01	02	03	04	05	06
		01	02	03	04	05	06	07	08	09	10	11	12	

STS-132

CDR Ham	PMC A/G	PRE SLEEP	SLEEP	POST SLEEP	PMC A/G	POST SLEEP
PLT Antonelli	PRE SLEEP		SLEEP	LOG	POST SLEEP	
MS1 Reisman	PRE SLEEP		SLEEP	LOG	POST SLEEP	
MS2 Good	PRE SLEEP		SLEEP	POST SLEEP		
MS3 Bowen	PRE SLEEP		SLEEP	LOG	POST SLEEP	
MS4 Sellers	PRE SLEEP		SLEEP	LOG	POST SLEEP	

DAY/NIGHT

ORBIT: 175 | 176 | 177 | 178 | 179 | 180 | 181 | 182

TDRS W E Z

GND: DFR -WSS; DFR -MLA; DFR -MLA -WSS; DFR -MLA -WSS; DFR -WSS

ORB ATT: -ZLV -XVV

NOTES

STS-132 FD (12)

REPLANNED

GMT Date 05/25 (145) | W | TDRS E | Z | D/N | DORB | ORB | MET Day 010 | STS ATT

CDR HAM | PLT ANTONELLI | MS1 REISMAN | NOTES

08:00 — 09:00 — 10:00 — 11:00 — 12:00 — 03:00 — 04:00 — 05:00 — 06:00

13 14 15 1 164 165 166 167

-ZLV -XVV

SLEEP | SLEEP | SLEEP

FD12 EZ ACTIVITIES:
- √OCAC FILTER
- TEPC (STATUS CHECK) (ORB OPS, CREW SYS)
- FLUID LOADING PREP
  - Ref. MSG 105
  - Inform MCC prior to filling drink bags.
- HARD REBOOT ALL PGSCs EXCEPT: STS-1(OCA ROUTER)

FD12 CABIN STOW ACTIVITIES:
- Remove loose items stored in A/L
- Perform SEAT INSTALLATION
- Perform FLIGHTS WITH RETENTION NET (REF DATA, ENTRY STOW)

POST-SLEEP ACTIVITY (ORB OPS, CREW SYS)
√Hum Seps for H2O Accumulation

SLEEP LOGBOOK (SDBI 1634)
POST-SLEEP ACTIVITY (ORB OPS, CREW SYS)

SLEEP LOGBOOK (SDBI 1634)
POST-SLEEP ACTIVITY (ORB OPS, CREW SYS)

STS-132 FD (12)

REPLANNED

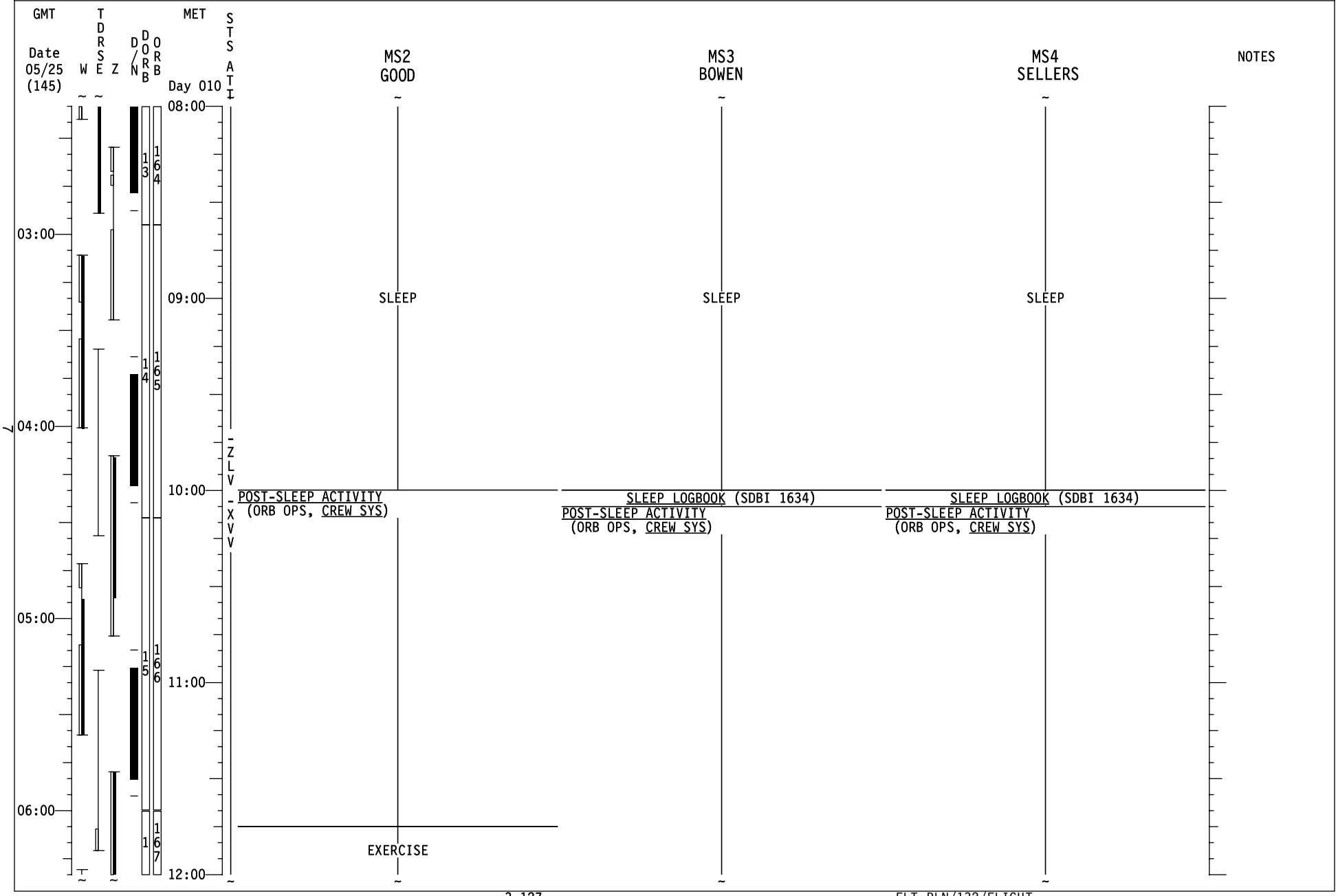

STS-132 FD (12)

REPLANNED

GMT Date 05/25 (145) | W | TDRS E | TDRS Z | D/N | DORB 1 | DORB 2 | DORB 3 | ORB 167 | ORB 168 | ORB 169 | MET Day 010 | STS ATT -ZLV -XVV

CDR HAM	PLT ANTONELLI	MS1 REISMAN	NOTES
POST-SLEEP ACTIVITY (ORB OPS, CREW SYS) √Hum Seps for H2O Accumulation	POST-SLEEP ACTIVITY (ORB OPS, CREW SYS)	POST-SLEEP ACTIVITY (ORB OPS, CREW SYS)	
W/B STEAM VENT HTR ACT [A]			
	FILTER CLEANING (IFM, SCHEDULED MAINTENANCE)		
EXERCISE [A] R2 √BLR CNTLR/HTR(three) -B PWR (three) -ON	[B] GNC 55 GPS STATUS INIT - ITEM 15 EXEC √MODE - INIT NAV - ITEM 18 EXEC √MODE - INS		
FCS CHECKOUT (ORB OPS, GNC)	GPS 2 RECOVERY [B] FCS CHECKOUT (ORB OPS, GNC)	FCS CHECKOUT CAMR SETUP (PHOTO/TV, REF PROC) SETUP	UPLINK TFL 161
		CABIN CONFIG/STOW	UPLINK TFL 188
RCS HOT FIRE TEST (ORB OPS, RCS)	RCS HOT FIRE TEST (ORB OPS, RCS)	COMM STRING 1 C/O (PART B) (ORB OPS, COMM/INST)	
PILOT WITH RHC (ORB OPS, PGSC)	PILOT WITH RHC (ORB OPS, PGSC)		
		EXERCISE	
CABIN CONFIG/STOW	CABIN CONFIG/STOW	CABIN CONFIG/STOW	

Time scale: 07:00, 08:00, 09:00, 10:00; MET 12:00, 13:00, 14:00, 15:00, 16:00

STS-132 FD (12)

REPLANNED

GMT Date 05/25 (145) | W | TDRS E | Z | D/N | DORB 1 | DORB 2 | DORB 3 | MET Day 010 | STS ATT

MS2 GOOD | MS3 BOWEN | MS4 SELLERS | NOTES

12:00 — 13:00 — 14:00 — 15:00 — 16:00

07:00 — 08:00 — 09:00 — 10:00

1 6 7 — 1 6 8 — 1 6 9

-ZLV -XVV

MS2 GOOD

EXERCISE

POST-SLEEP ACTIVITY (ORB OPS, CREW SYS)

FCS CHECKOUT (ORB OPS, GNC)

PILOT WITH RHC (ORB OPS, PGSC)

MS3 BOWEN

POST-SLEEP ACTIVITY (ORB OPS, CREW SYS)

EXERCISE

CABIN CONFIG/STOW

MS4 SELLERS

POST-SLEEP ACTIVITY (ORB OPS, CREW SYS)

GLACIER STATUS CHECK (Cue Card)
CGBA STATUS CHECK (Cue Card)
WLES DEACTIVATION AND TEARDOWN (ORB OPS, WLES PROCEDURES)

EXERCISE

CABIN CONFIG/STOW

STS-132 FD (12)

REPLANNED

GMT Date 05/25 (145) | W | TDRS E | Z | D/N | DORB 3 4 5 6 | ORB 169 170 171 172 | MET Day 010 | STS ATT -ZLV -XVV DUMP

MET	CDR HAM	PLT ANTONELLI	MS1 REISMAN	NOTES
16:00	CABIN CONFIG/STOW	CABIN CONFIG/STOW	CABIN CONFIG/STOW	
		SUPPLY WATER DUMP USING FES [C]		
	CREW CHOICE D/L KU AVAIL: TDRE 16:13-16:40	CREW CHOICE D/L KU AVAIL: TDRE 16:13-16:40	CREW CHOICE D/L KU AVAIL: TDRE 16:13-16:40	
11:00		[C] (ORB OPS, ECLS) Perform DUMP INITIATION using FES PRI A		
17:00	CABIN CONFIG/STOW	CABIN CONFIG/STOW	CABIN CONFIG/STOW	
12:00	DEORBIT PREP BRIEFING	DEORBIT PREP BRIEFING	DEORBIT PREP BRIEFING	
18:00	PUBLIC AFFAIRS EVENT KU AVAIL: TDRE 17:49-18:17 Ref. MSG 103	PUBLIC AFFAIRS EVENT KU AVAIL: TDRE 17:49-18:17 Ref. MSG 103	PUBLIC AFFAIRS EVENT KU AVAIL: TDRE 17:49-18:17 Ref. MSG 103	
13:00	MEAL	EXERCISE	MEAL	
19:00	[D] TG=2 BV=3 OM=70 A1/AUTO/VERN Init TRK	[E] (ORB OPS, ECLS) Perform DUMP TERMINATION FES not req'd		
	MNVR (TRK) -ZLV -YVV [D] SUPPLY/WASTE WATER DUMP (ORB OPS, ECLS) Initiate Waste Dump MCC will TMBU limits in steps B and K Nozzle open time will be ~16 min	SUPPLY WATER DUMP USING FES [E]	LANDING-1 COMM C/O (ORB OPS, COMM/INST) MILA: 19:23 - 19:29	
14:00		MEAL		
20:00	SUPPLY/WASTE WATER DUMP (ORB OPS, ECLS) Terminate Waste Dump		CABIN CONFIG/STOW	

STS-132 FD (12)

REPLANNED

GMT Date 05/25 (145) | W | TDRS E | Z | D/N | DORB | ORB | MET Day 010 | STS ATT

MET	MS2 GOOD	MS3 BOWEN	MS4 SELLERS	NOTES
16:00	CANON G1 (PHOTO/TV, REF PROC) HD CC DNLK	CABIN CONFIG/STOW	CABIN CONFIG/STOW	
	CREW CHOICE D/L KU AVAIL: TDRE 16:13-16:40	CREW CHOICE D/L KU AVAIL: TDRE 16:13-16:40	CREW CHOICE D/L KU AVAIL: TDRE 16:13-16:40	
11:00				
17:00	CABIN CONFIG/STOW	CABIN CONFIG/STOW	CABIN CONFIG/STOW	
	DEORBIT PREP BRIEFING	DEORBIT PREP BRIEFING	DEORBIT PREP BRIEFING	
12:00				
18:00	PUBLIC AFFAIRS EVENT KU AVAIL: TDRE 17:49-18:17 Ref. MSG 103	PUBLIC AFFAIRS EVENT KU AVAIL: TDRE 17:49-18:17 Ref. MSG 103	PUBLIC AFFAIRS EVENT KU AVAIL: TDRE 17:49-18:17 Ref. MSG 103	
		MINI-CAM (PHOTO/TV, REF PROC) ENTRY VIDEO SETUP		
13:00	MEAL	MEAL	MEAL	
19:00	SSV DEACTIVATION (PHOTO/TV, SSV)			UPLINK TFL 161
14:00	CABIN CONFIG/STOW	CYCLE ERGOMETER OPS (ORB OPS, CREW SYS) Perform RECONFIG/STOW	CYCLE ERGOMETER OPS (ORB OPS, CREW SYS) Perform RECONFIG/STOW	
20:00				

STS ATT: ZLV, XVV, DUMP

DORB: 3, 4, 5, 6

ORB: 169, 170, 171, 172

STS-132 FD (12)

REPLANNED

GMT Date 05/25 (145) | W | TDRS E | Z | D/N | DORB | ORB | MET Day 010 | STS ATT

CDR HAM

20:00 — SUPPLY/WASTE WATER DUMP (ORB OPS, ECLS)
Terminate Waste Dump

DUMP

IMU STAR OF OPPTY ALIGN (ORB OPS, GNC)
ILLUMINATOR OPS(CUE CARD,TV)√ILLUM OFF-ALL
A7U √PL BAY FLOOD (all) - OFF
ON-ORBIT OMS BURN
(ORB OPS, OMS)

21:00 — < SIMPLEX TIG (21:03)

MNVR (TRK) -ZLV -XVV
TG=2 BV=3 OM=0
A1/AUTO/VERN Init TRK

CABIN CONFIG/STOW

-ZLV -XVV

PRE-SLEEP ACTIVITY
(ORB OPS, CREW SYS)

PLT ANTONELLI

MEAL

CABIN CONFIG/STOW

ON-ORBIT OMS BURN
(ORB OPS, OMS)

CABIN CONFIG/STOW

F R12 √VPU PWR - OFF(LED-off)
Minimize use of P/TV equipment
Dim cabin lighting to 25%

ENTRY COOLING CONFIG F
PRE-SLEEP ACTIVITY
(ORB OPS, CREW SYS)

MS1 REISMAN

CABIN CONFIG/STOW

LANDING-1 COMM C/O
(ORB OPS, COMM/INST)
DRYDEN: 22:28 - 22:35

A6L MADS STRAIN GAGE - ON
KU-BD ANT STOW
(ORB OPS, COMM/INST)Deact CCTV
PRE-SLEEP ACTIVITY
(ORB OPS, CREW SYS)

NOTES

15:00 — 16:00 — 17:00 — 18:00 — 22:00 — 23:00 — 00:00

6 7 8 9 — 172 173 174

STS-132 FD (12)

REPLANNED

GMT Date 05/25 (145) | W | TDRS E | Z | D/N | DORB | ORB | MET Day 010 | STS ATT

15:00 16:00 17:00 18:00

20:00 21:00 22:00 23:00 00:00

DUMP — S — -ZLV-XVV

6 7 8 9

172 173 174

MS2 GOOD

CABIN CONFIG/STOW

ENTRY STOWAGE
(DEORBIT PREP, NOMINAL DEORBIT PREP)
Block 3, pg. 1-31
Do not stow FLIGHT PLAN

CABIN CONFIG/STOW

PRE-SLEEP ACTIVITY
(ORB OPS, CREW SYS)

MS3 BOWEN

CABIN CONFIG/STOW

P/TV10 SEITE,SIMPLEX PAYLOADS
(PHOTO/TV, SCENES) Setup
Ref. MSG 107

P/TV10 SEITE,SIMPLEX PAYLOADS
(PHOTO/TV, SCENES) Ops
Ref. MSG 107

CABIN CONFIG/STOW

ENTRY STOWAGE
(DEORBIT PREP, NOMINAL DEORBIT PREP)
Block 3, pg. 1-31
Do not stow FLIGHT PLAN

ENTRY AIRLOCK CONFIG
(DEORBIT PREP, NOMINAL DEORBIT PREP)
Block 3A, pg. 1-32

PRE-SLEEP ACTIVITY
(ORB OPS, CREW SYS)

MS4 SELLERS

GAP TERMINATION
(ASSY OPS, PAYLOADS)
Terminate MICRO GAPS M1-M10
Ref. MSG 100, Item 5

CGBA ADJUST SET TEMP (ASSY OPS, PAYLOADS)
CGBA set point changes from 37° to 8° C

CABIN CONFIG/STOW

ENTRY STOWAGE
(DEORBIT PREP, NOMINAL DEORBIT PREP)
Block 3, pg. 1-31
Do not stow FLIGHT PLAN

PGSC NETWORK (B.TEARDOWN)
COLOR PRINTER STOW (ORB OPS, PGSC)
Stow color printer and all STS PGSCs

KU-BD ANT STOW
(ORB OPS, COMM/INSTI)Deact CCTV

GLACIER STATUS CHECK (Cue Card)
CGBA STATUS CHECK (Cue Card)
PRE-SLEEP ACTIVITY
(ORB OPS, CREW SYS)

NOTES

STS-132 FD (12)

REPLANNED

GMT Date 05/25 (145) | W | TDRS E | Z | D/N | DORB 9 | DORB 10 | DORB 11 | ORB 175 | ORB 176 | ORB 177 | MET Day 011 | STS ATT -ZLV -XVV

	CDR HAM	PLT ANTONELLI	MS1 REISMAN	NOTES
00:00	06 √UHF MODE - OFF PRIVATE MEDICAL CONFERENCE PRE-SLEEP ACTIVITY (ORB OPS, CREW SYS)	PRE-SLEEP ACTIVITY (ORB OPS, CREW SYS)	PRE-SLEEP ACTIVITY (ORB OPS, CREW SYS)	
19:00				
01:00				
20:00				
02:00				
21:00				
03:00	SLEEP	SLEEP	SLEEP	
22:00				
04:00				

STS-132 FD (12)

REPLANNED

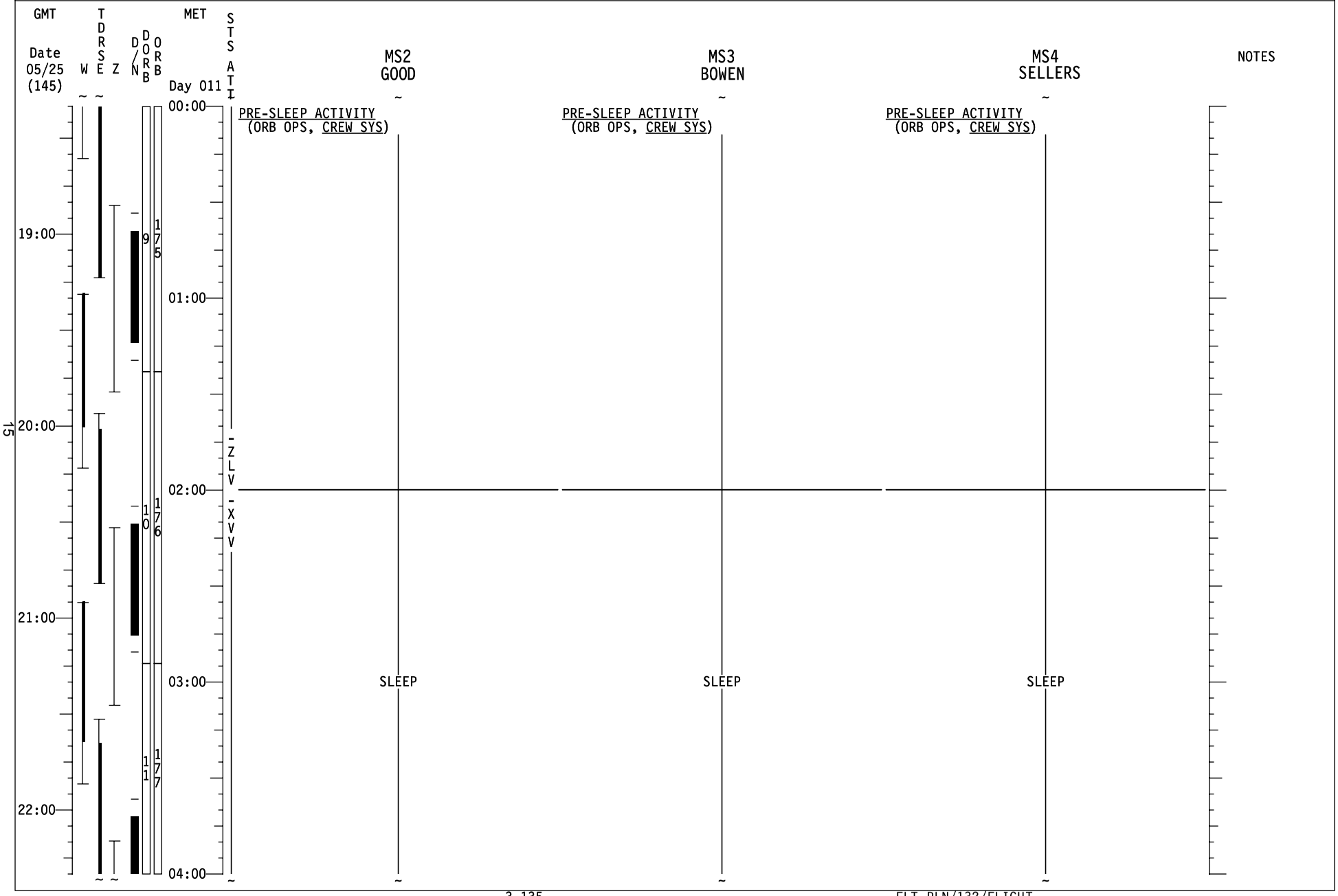

MSG 101 - FD12 MISSION SUMMARY

Good Morning Atlantis!!!

You have accomplished everything on orbit that you launched to do and then some!

So now it is time to think about heading earthward!!!

Have a happy “packing up” and entry prep day!!!

YOUR CURRENT ORBIT IS: 192 X 183 NM

NOTAMS - (ONE CHANGE: DELETED MRN.)

EDW -	EDW 22L/04R IN USE. EDT 22R/04L CLOSED FOR CONSTRUCTION.
EDW -	LAKEBED RWYS 15/33 GREEN. 18L RED.
NOR -	LAKEBED RWYS GREEN.
NTU -	RWY 05R/23L CLSD.
FOK -	CLOSED.
FMH -	RWY 23 APCH LTS OTS.
YYT -	TACAN UYT23 AZIMUTH OTS.
KBO -	TACAN DOR23Y DME OTS.
AMB -	RWY 15/33 REQUIRES 30MIN PN TO CLEAR WIP.
PTN -	CLSD.
IKF -	NOT USABLE. NO AGREEMENT.
BEN -	NOT RECOMMENDED/NOT SUPPORTED

<u>NEXT 2 PLS OPPORTUNITIES:</u>

EDW22	ORB173 – 10/21:41	SCT250	7	220/7P11
EDW22	ORB188 – 11/20:31	SCT040 BKN080 OVC250	7	220/13P19

<u>OMS TANK FAIL CAPABILITY:</u>

L or R OMS FAILS: NO

<u>LEAKING OMS PRPLT BURN:</u>

L or R OMS LEAK: ALWAYS BURN RETROGRADE

<u>OMS QUANTITIES(%)</u>

L OMS OX = 36.77 R OMS OX = 37.23
FU = 36.79 FU = 36.89

FOR CURRENT QTYS, SUBTRACT INCN’T COUNTER

END OF PAGE 1 OF 2, MSG 101

MSG 101 - FD12 MISSION SUMMARY

DELTA V AVAILABLE:

OMS	370 FPS
ARCS (TOTAL ABOVE QTY1)	36 FPS
TOTAL IN THE AFT	406 FPS
ARCS (TOTAL ABOVE QTY2)	68 FPS
FRCS (ABOVE QTY 1)	25 FPS
AFT QTY 1	80 %
AFT QTY 2	42 %

THERE ARE NO FAILURE/IMPACT/WORK AROUNDS FOR TODAY.

END OF PAGE 2 OF 2, MSG 101

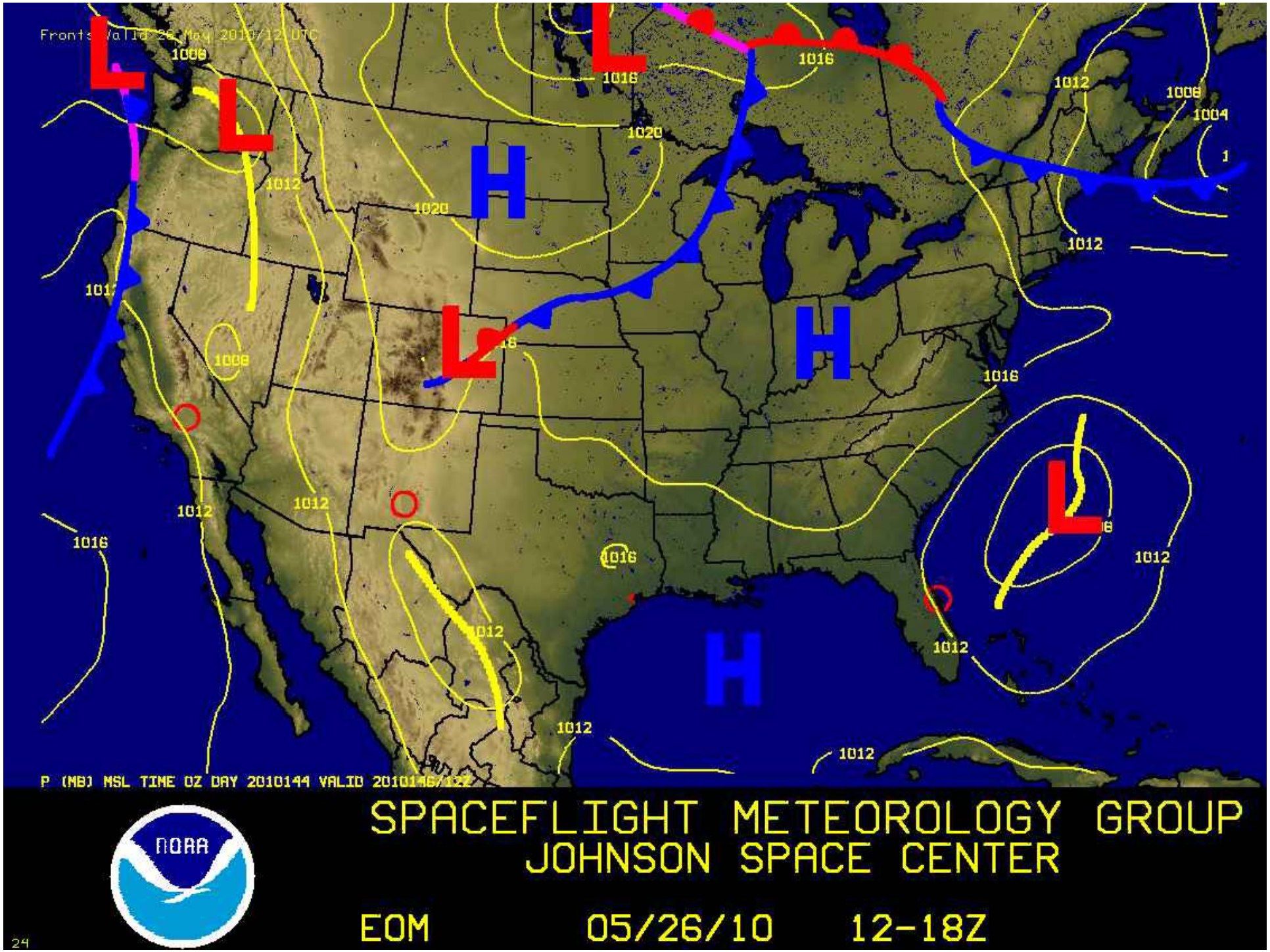
Fronts Valid 26 May 2010/12 UTC
P (MB) MSL TIME OZ DAY 2010144 VALID 2010146/12Z
SPACEFLIGHT METEOROLOGY GROUP
JOHNSON SPACE CENTER
NOAA
EOM 05/26/10 12-18Z

EOM Forecasts

STS-132

ISSUED: Monday May. 24, 2010 1230Z
Monday May. 24, 2010 0730CDT

KSC	Valid: Wednesday 1248 UTC - 1423 UTC		
	Wednesday May 26 0748 CDT - 0923 CDT		
	SCT030 BKN100 BKN250	7 SM	33012P18 KT
	CHC SHRA WI 30NM		RWY 15/33 X=2 T/H=18
EDW	Valid: Wednesday 1553 UTC - 1729 UTC		
	Wednesday May 26 1053 CDT - 1229 CDT		
	FEW040 SCT080 BKN250	7 SM	22013P19 KT
	SLGT CHC SHRA WI 30NM		RWY 22/04 X=2 H/T=19
NOR	Valid: Wednesday 1555 UTC - 1731 UTC		
	Wednesday May 26 1055 CDT - 1231 CDT		
	FEW060	7 SM	14008P10 KT
			RWY 17/35 X=6 H/T=8

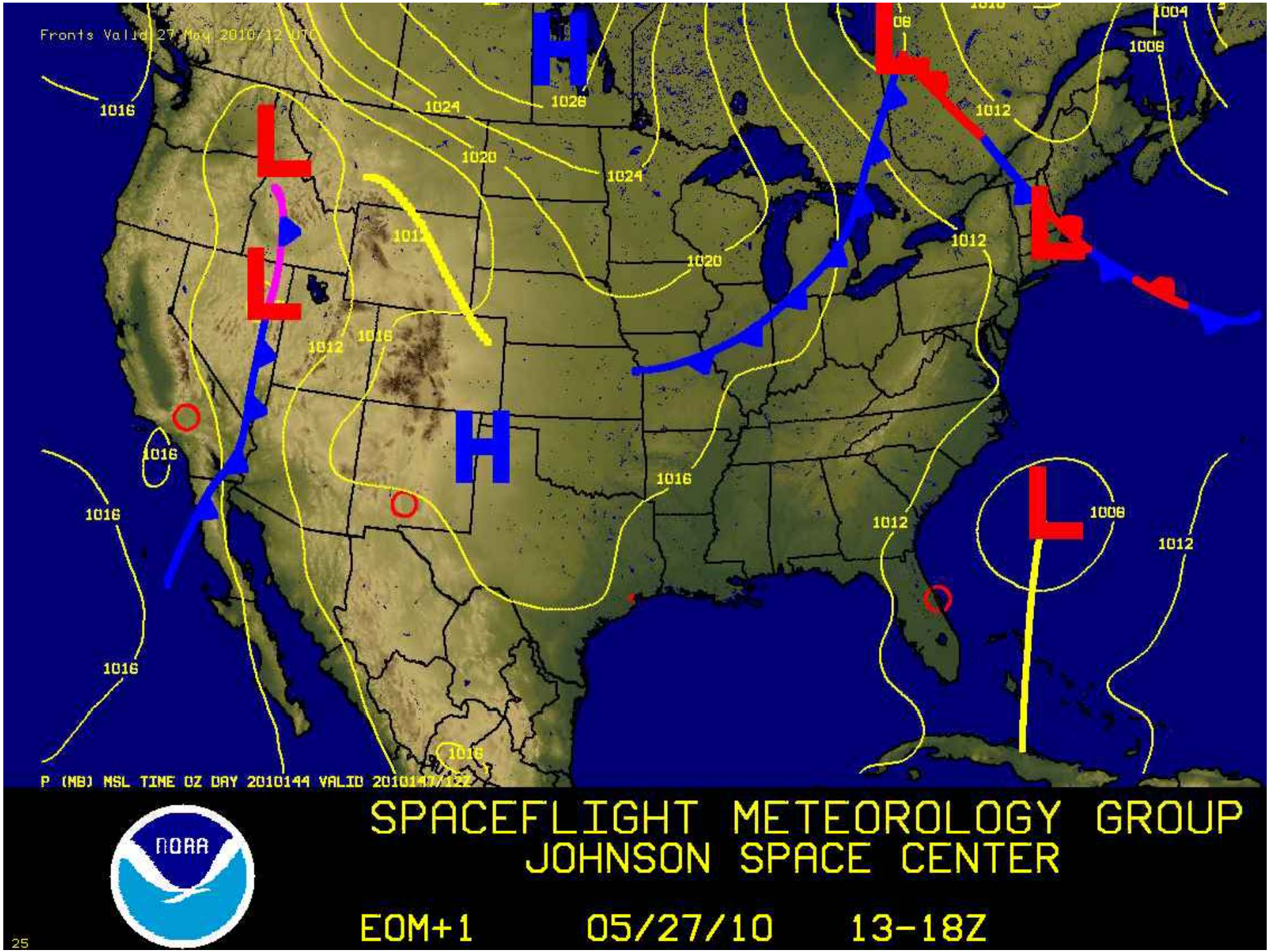
Fronts Valid 27 May 2010/12 UTC
P (MB) MSL TIME OZ DAY 2010144 VALID 2010147/12Z
SPACEFLIGHT METEOROLOGY GROUP
JOHNSON SPACE CENTER
NOAA
EOM+1
05/27/10
13-18Z
25

EOM+1 Forecasts

STS-132

ISSUED: Monday May. 24, 2010 1230Z
Monday May. 24, 2010 0730CDT

KSC	Valid: Thursday 1313 UTC - 1448 UTC		
	Thursday May 27 0813 CDT - 0948 CDT		
	FEW025 SCT080 BKN250	7 SM	34007P11 KT
	CHC SHRA WI 30NM		RWY 15/33 X=1 T/H=11
EDW	Valid: Thursday 1618 UTC - 1754 UTC		
	Thursday May 27 1118 CDT - 1254 CDT		
	FEW040 BKN250	7 SM	23014P20 KT
			RWY 22/04 X=2 H/T=20
NOR	Valid: Thursday 1445 UTC - 1620 UTC		
	Thursday May 27 0945 CDT - 1120 CDT		
	FEW060 FEW100 SCT250	7 SM	14008P10 KT
			RWY 17/35 X=6 H/T=8

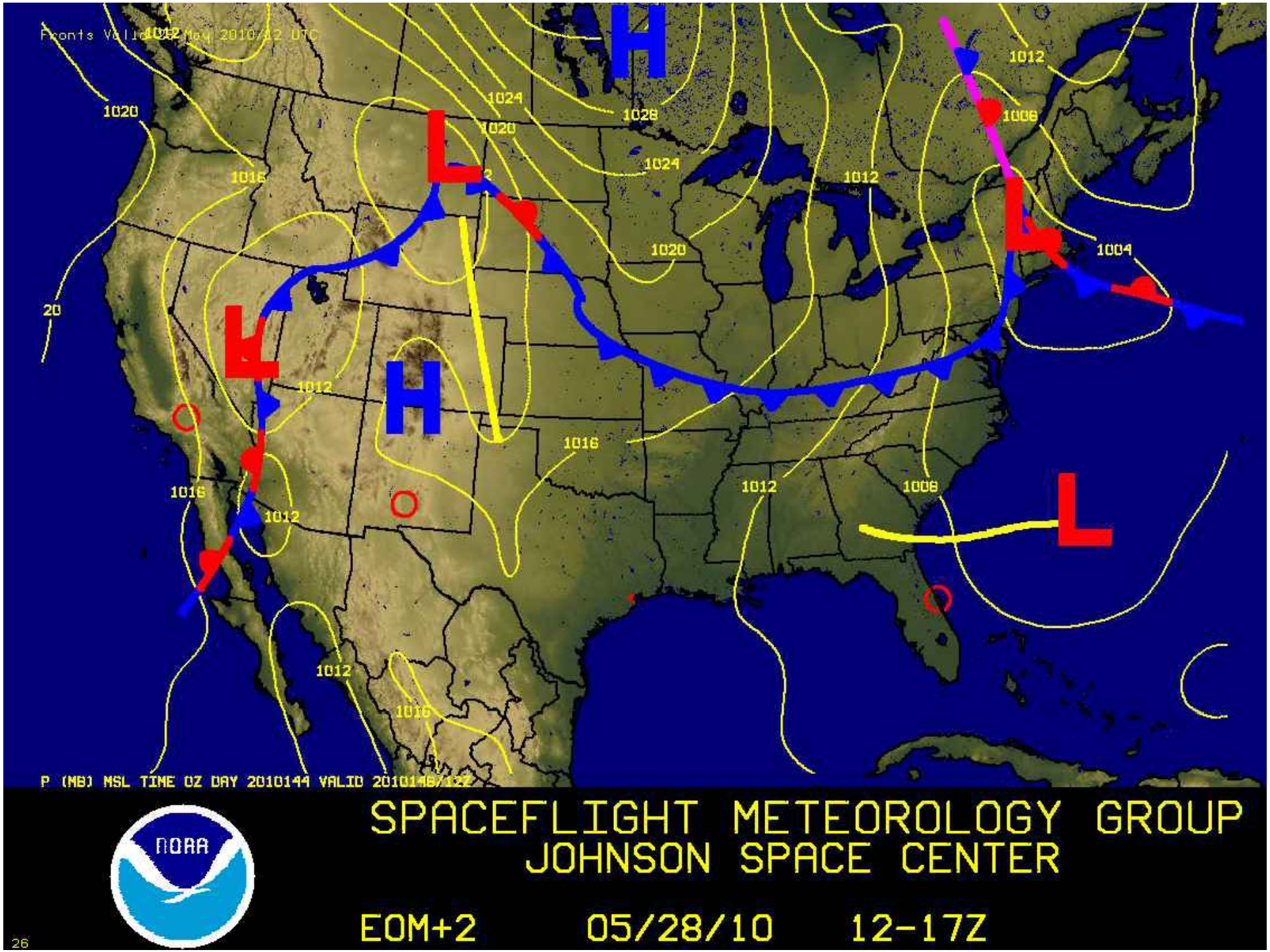
P (MB) MSL TIME OZ DAY 2010144 VALID 2010148/12Z
SPACEFLIGHT METEOROLOGY GROUP
JOHNSON SPACE CENTER
NOAA
EOM+2
05/28/10
12-17Z
26

EOM+2 Forecasts

STS-132

ISSUED: Monday May. 24, 2010 1230Z
Monday May. 24, 2010 0730CDT

KSC	Valid: Friday 1202 UTC - 1337 UTC		
	Friday May 28 0702 CDT - 0837 CDT		
	FEW025 BKN080 BKN250	7 SM	36006P08 KT
	CHC SHRA WI 30NM		RWY 15/33 X=3 T/H=7
EDW	Valid: Friday 1508 UTC - 1643 UTC		
	Friday May 28 1008 CDT - 1143 CDT		
	SCT050 SCT250	7 SM	25012P18 KT
			RWY 22/04 X=8 H/T=16
NOR	Valid: Friday 1509 UTC - 1645 UTC		
	Friday May 28 1009 CDT - 1145 CDT		
	FEW060 FEW100 SCT250	7 SM	14008P10 KT
			RWY 17/35 X=6 H/T=8

MSG 104 - FD11 MMT SUMMARY

STS-132/ULF4 FD11- MMT Summary

The MMT met briefly today to review the orbiter systems and mission progress.

Atlantis continues to perform flawlessly as you guys get her prepared for her trip home.

Great job hitting the ground running this morning and completing the Late Inspection early. The DAT has completed the Level 1 processing of the LDRI data and no issues have been identified. At the time of the MMT, ~ 3% of the Level 2 processing was complete. Review of the Late Inspection data is scheduled to be completed mid to late FD12.

The STS-132 Entry support strategy was discussed. With EOM+3 consumables capability, based on the latest forecasts, the landing strategy would be KSC only on EOM, KSC only on EOM+1, and pick-em day on EOM+2. The KSC forecast is trending in the favorable direction and we will wait and see what Wednesday brings to make sure we get you safely home.

END OF PAGE 1 OF 1, MSG 104

CABIN STOW MESSAGE

Good Morning, STS-132 Crew. Below are a few stowage notes for cabin stow.

- The STS-132 Middeck Stowage Team

GENERAL MIDDECK REMINDERS:

1. **MF14K:** Stow all ACTIWATCHES and LOG BOOKS.
2. **Airlock Floor:** Tie Jettison Stowage Bag containing CIR Manifold foam to Hand Rail Standoff
   2.1. Due to mass constraint stow used towels and wash cloths in Volume B (Dry Trash)
   2.2. Return as much clothing as feasible in clothing/food lockers
   2.3. Stow FD and MD Bones Bag Airlock Floor
3. **Middeck Retention Net:** Stow "Post-Flight" shirts (approx. qty. 18)
   3.1. Stow Ascent FDF in Return to Houston Bag

BAG CONFIGURATION REMINDERS:

4. **MD CEIL STBD (EMU COVER) – RETURN BAG #406:** No deltas from what was reported complete in the Final Transfer List.
5. **MD CEIL PORT 1 (Bag Z):** No deltas from FD09 MSG 084A
6. **MD CEIL PORT 2 (Bag C):** No deltas from FD09 MSG 084A.
7. **MD FLOOR STBD 2 (Bag E):**
   7.1. Delta from FD09 MSG 084A : Addition of transfer item #927. Reported complete in Final Transfer List. No new layout required.
8. **MD FLOOR STBD 1 (Bag D):** No deltas from FD09 MSG 084A.
9. **MD FLOOR PORT 2 (Bag F):**
   9.1. Delta from FD06 MSG 046 : Addition of transfer items #922 and #924. Reported complete in Final Transfer List. No new layout required.
10. **MD FLOOR PORT 1 (Bag B):**
    10.1. Delta from FD09 MSG 084A : Deletion of transfer item #733. Reported as deleted in Final Transfer List. No new layout required.
11. **AIRLOCK FLOOR BAG (BAG I):**
    11.1. Reference attached layout attached.
    11.2. Addition of Transfer item #923 and #926. Reported complete in Final Transfer List.

NOTE 1: The FWD end of the 5-MLE Bag is the end with the picture decal on the lid.
The RFTA Bags (B and D) will be installed reverse for Return with picture decal facing aft.

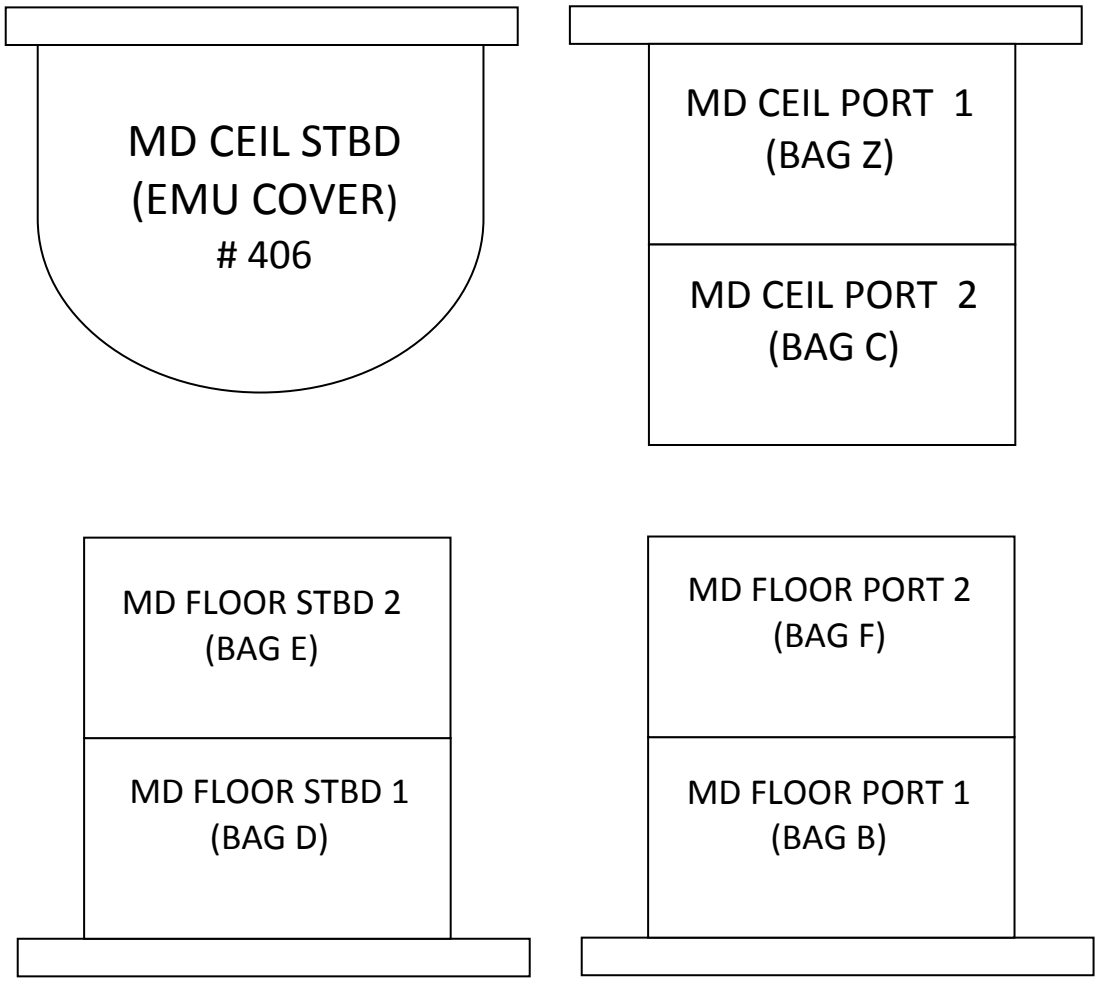

AIRLOCK FLOOR (BAG I)

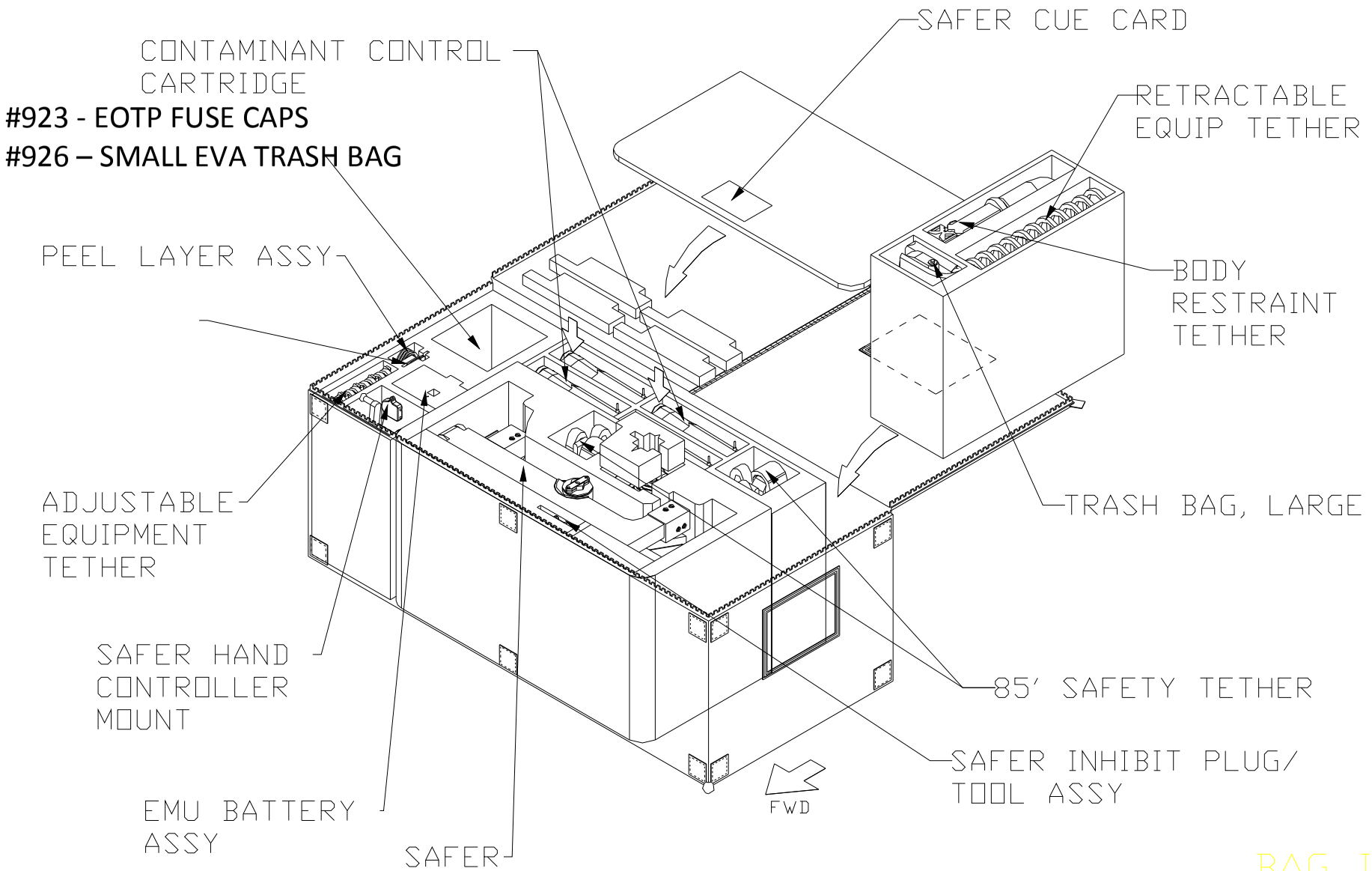

MSG106 CABIN STOW MESSAGE

LW MAR
SJD32108929-366

CDR	KEN HAM
PLT	TONY ANTONELLI
M/S #1	GARRETT REISMAN
M/S #2	MICHAEL GOOD
M/S #3	STEVE BOWEN
M/S #4	PIERS SELLERS

DESCENT MODULAR LOCKER LAYOUT

LEADER:	DEWEY LOUVIER
DATE:	05-24-10
LAUNCH:	5-14-2010
FLIGHT	STS-132/ULF4
VEHICLE	OV-104
CREW:	6 CREW/12 + 0 + 2 DAYS
RQMTS:	NO RCRS, SLEEPING
	BAGS, EXT A/L, ERGOMETER, RMS
	LW MAR, NON-EDO VOL B

ML60B 6013 -311

ML60E 1434 -306

ML60M 6014 -312

VOL B (MA4D/J)

VOL 3B 7425 -328 (MA75J)

PANTRY FOOD 1622 -308

MF57A PANTRY FOOD 1622 -308 UTENSILS

PANTRY FOOD 1622 -302

MIDDECK FORWARD

5962 -303 MF14E 6269 -315 — 6256-311

MF28E/G 1159 -301 — #726 GLACIER — (36 CFM/REAR BREATHER)

MF14G 2766 -305 — #925 INPUT DRIVE BRACKET

6300 -350 MF14H 6250 -358 — IFM TOOLS, # 907 NEEDLE NOSE PLIERS, # 727 ☒ MULTIMETER

MF28H 5452 -331 — # 720 FOAM APLTRS — ALTIMETER ON LOCKER DR

0306 -317 MF14K 1805 TBD — POST INSERTION 2 ACTIWATCH (4)

MF28K 6231 -382

MF14M 6299 -327 — # 736 ☒ WORK LTS(2)/LT, #911 D2X BATTERIES

MF28M 2763 -304 — # 724 LIOH CANS (2)

MF14O — MF28O 8965 -325 — MCU

MF43C 1817 -301 — # 400 HCTB | # 403 HCTB

MF43E 6697 -341

MF43G 1908 -309

MF43H 1902 -309

MF43K 2764 -306

MF43M 1904 -309

6066 -334 MF43O 8719 -309

MF57C 1820 -301 — #402 CTB, #721, 722, 723 GSC, #709 CSA CP RESPLY

MF57E 1900 -308

MF57G 6240 -311

MF57H 5473 -305

MF57K 2760 -306 — WATER SAMPLES, #905 COMMEMORATIVE ITEM

MF57M 1901 -306

MF57O 8723 -302 — FDI

MF71C 1779 -302 — #713 ECCO

MF71E 1157 -301 — MICRO 2(CGBA2)

MF71G 2765 -304

MF71H 1903 -305

MF71K 2767 -304

MF71M 3005 -304

MF710 2768 -303 — # 724 LIOH CANS (3)

MIDDECK AFT

MA9D 1801 -301

MA16D 5971 -312 — # 708 CGBA 6

MA9F 1821 -301 — #405 CTB, #903 RET TO HOUSTON, #904 PASSIVE DET PCH

MA16F 1819 -301 — GAP (8) | #401 HCTB

MA9G 8737 -311

MA16G 1818 -302 — # 404 HCTB | #900 COMMEM ITEMS (QTY 10) (HCTB)

MA9J TBD — #710 COLD BAG

MA16J TBD — #711 COLD BAG

MA9L TBD — #712 COLD BAG

MA16L 9014 -319

MA9N 7432 -344 — SOFT STWG BAGS

MA16N 0631 -321

MD CEIL (PORT 1) 1816 -301 — Z
#604 HCTB
#605 HCTB
#609 MSL GAS SUPPLY
912 FILTER KIT
918 FOOD CONTAINERS

MD CEIL (PORT 2) 1795 -309 — C
603 REBA BATTERY
MWS/GIMBAL (2), CCC (3)
☒COMM CAPS (G1/G2)
LCVG/BIO, # 717 ECOK (G)
915 GEL BRUSH KIT
PHASE VI GLOVES
SGANT CAPS

MD CEIL (STBD) 7440 -TBD
5-MLE BAG/EMU COVER
#917 ORU BAG (LG)
#406

MD FLOOR (PORT 2) 1814 -302 — F
CDRA FOAM
#600 MPC (MSL SCA)
#601 MPC (MSL SCA)
#607 400MM LENS
#922 OTP BJU COVER
#924 THERMAL BLANKET

MD FLOOR (PORT 1) 1796 -317 — B
#602 RFTA (FILLED)
#606 CD LIBRARY, CCC (1)
#706 APEX WTR REFILL KIT
#707 ABRS AIR FLTR CART
901 ABRS AIR FLTR CART
#914 BLOOD KITS

MD FLOOR (STBD 2) 1797 -305 — E
#927 CIR MANIFOLD FOAM (5)

MD FLOOR (STBD 1) 1796 -316 — D
#608 RFTA (FILLED)
WATER TRANS EQUIP
CWC/RESID H20
#913 ACTEX UNIT ASSY
#916 ISS GENERAL PURPOSE CADDY

A16 7490 -313

A17 7424 -304

VOLUME D 7498 -304 (MD52C)

VOLUME F 1403 -306 (MD76M) — WET TRASH

VOLUME G 1800 -346 (MD80R)

VOLUME H 8068 -331 (MD23R) — EVA ACCESS (INBD)

8065 -319 — EVA ACCESS (OBD)

4575 -322 WMC 0914 -332 (MAB2H)

5555 -346 EXT A/L 7404 -322 — #928 FOAM (6) 2-EMUs

EXT A/L FLOOR 1791 -TBD — #729 ☒ SAFER (1), ☒HAND CONTROLLER/ (DCM HARD MOUNT), #923 OTP FUSE CAPS, #926 SMALL EVA TRASH BAG — I

SEAT 7 1815 -301 — REPLACEMENT BAG, # 908 EDV (QTY 1), PBA FOAM (6), # 919 FOOD CONTAINERS (3 MLE)

ONLY LOCATIONS THAT CHANGED OR CONTAIN TRANSFER ITEMS ARE SHOWN

LIOH BOX
#724
128 CANS: #30, #31
129 CANS: #26, #31, #32

CTB	HLF	SGL
LAUNCH	8	9
RETURN	TBD	TBD

● RUNWAY DESTOW
☒ SWAP
CTB CARGO TRANSFER BAG
HCTB HALF CARGO TRANSFER BAG

NOTE: LOCKER LAYOUTS ARE FOR REFERENCE ONLY & ARE NOT RELEASED DWGS. FOR RELEASED DRAWING, PLEASE REFER TO THE CREW COMPARTMENT CONFIGURATION DRAWING FOR THIS FLIGHT (SGD32104455)

DWG NO. SGD32104455

CCMM: DELLA WYLIN
281-483-9790
/USR/DWGS/LOCKER/STS-132

PHOTO/TV 10 setup for SIMPLEX

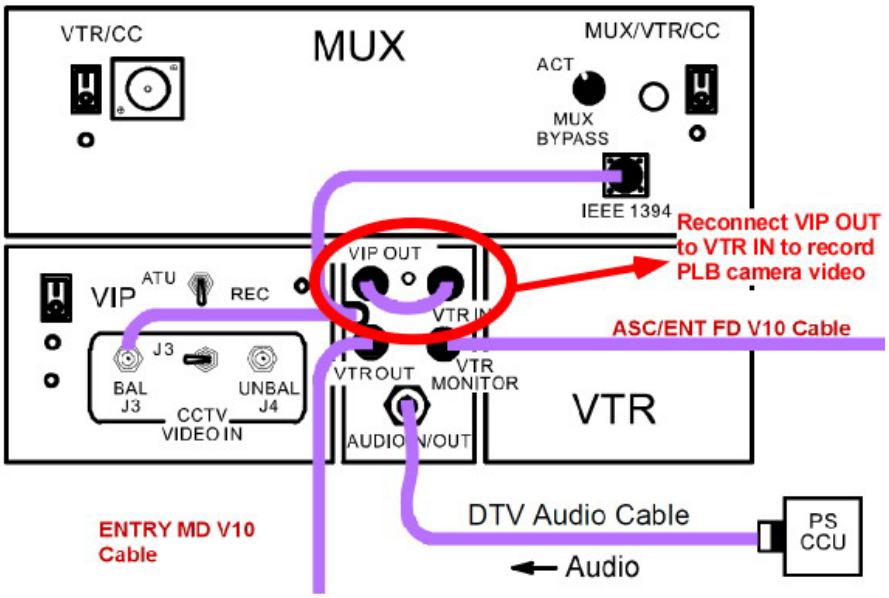

Following the SIMPLEX burn, verify the following ENTRY VIDEO SETUP for L-1 Comm Check at DFR:

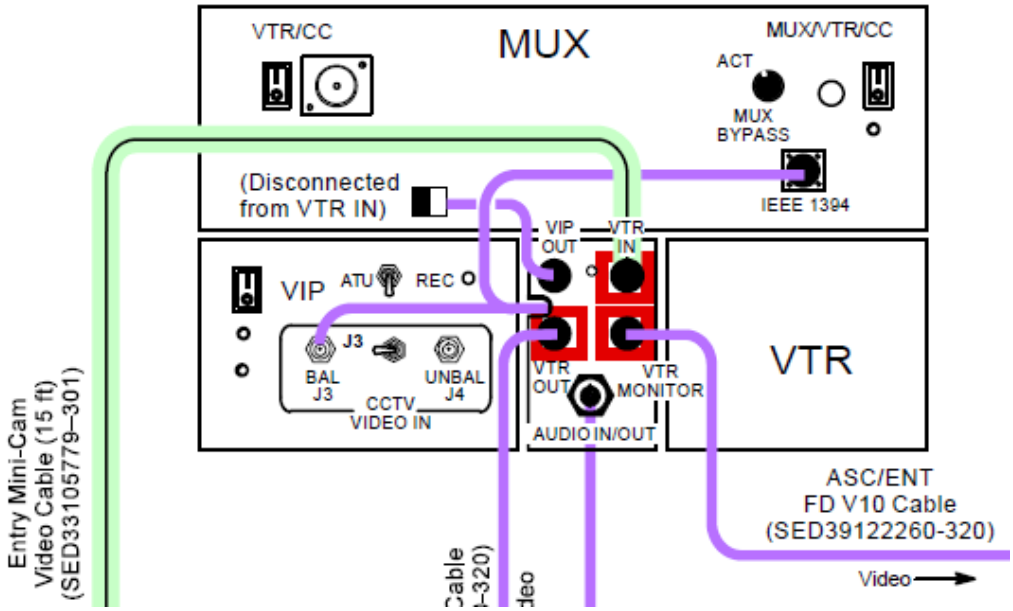

END OF PAGE 1 OF 1, MSG 107