STS-132 / ULF4

FD 06 Execute Package

MSG	Page(s)	Title
042A	1 - 13	FD06 Flight Plan Revision
043	14 - 15	FD06 Mission Summary
044	16 - 17	FD06 Transfer Message
045	18	FD05 MMT Summary
046	19 - 26	5-MLE BAG LAYOUTS
047	27 - 29	Packing Plan for EDV in Seat 7 Bag
048	30	STS-132 EVA OBSS Cable Repair RSAD/DOUG Instructions
049	31 - 37	EVA OBSS Cable Repair Procedure
050	38 - 42	SGANT Securing and Gimbal Lock Removal

Approved by FAO:
G. Whitney

Last Updated: May 19 2010 5:57 AM GMT
JEDI *(**J**oint **E**xecute package **D**evelopment and **I**ntegration), v3.0*

Garrett: ♬ *Rassvet.*
I'm taking a Rassvet.
I'm packing my suitcase
Hey, look out, Moon! ♬

Bueno: You are NOT Astronaut Jones.
Will you please shut up?

Garrett: ♬ *Yeah, a Rassvet*
into outer space. ♬

Hock: Garrett, shut up or we're turning
around and going home!

Garrett: [Silence]

Bueno: What do you say to that, Garrett?

Garrett: Well, why don't you drop out of
that orange jumpsuit and show me--

Hock: SHUT UP!

THIS PAGE INTENTIONALLY BLANK

MSG INDEX

MSG NO.	TITLE
042	FD06 Flight Plan Revision (23-0639)
043	FD06 Mission Summary
044	FD06 Transfer Message (23-0638)
045	FD05 MMT Summary
046	5-MLE BAG LAYOUTS
047	Packing Plan for EDV in Seat 7 Bag
048	STS-132 EVA OBSS Cable Repair RSAD/DOUG Instructions
049	EVA OBSS Cable Repair Procedure
050	SGANT Securing and Gimbal Lock Removal

1. Post-Sleep Cryo Config

For today's post-sleep cryo config, O2 and H2 tanks 1 and 5 will be active.

R1 O2,H2 MANF VLV TK1 (two) - OP (tb-OP)

A15 CRYO TK5 HTR O2 B - OFF

Pre-Sleep Cryo Config

√MCC for deltas prior to configuring for pre-sleep.

For tonight's pre-sleep cryo config, manifold 2 will be closed with O2 and H2 tanks 2 and 5 active.

R1 O2,H2 TK1 HTRS A,B (four) - OFF
TK2 HTRS A,B (four) - AUTO
MANF VLV TK2 (two) - CL (tb-CL)

2. Crew Choice Downlink Opportunities

TDRS	AOS	LOS	Delta (min)	Notes
W	05/00:15	05/00:50	35	
W	05/01:51	05/02:27	36	
E	05/02:29	05/02:39	10	

3. For today's LDRI Cable Repair, reference MSG 036.

4. Replace pages 2-18 through 2-21 and 3-56 through 3-63.

FD06
GMT 05/19/10 (139)
MET Day 004

NO UNISOLATED EXERCISE [LDRI CABLE]
NO UNISOLATED EXERCISE [P6 BATT R&R]
REPLANNED

12 07 13 08 14 09 15 10 16 11 17 12 18 13 19 14 20 15 21 16 22 17 23 18 005/00

STS-132 2

CDR Ham	POST SLEEP	PMC A/G
	POST SLEEP	HYG BRK/ HATCH CLS
	EVA PREP	EMU PURGE
	EMU PREBREATHE	C_LK DPRS
	P DPS	N2-INIT
	CWCI	CFILL #12
	CFILL #13	CWCI
	CFILL #14	CWCI
	CXFER-3	P/TV 07 EVA SUPT
	N2-TERM	MEAL
	P/TV 07 EVA SUPT	CWCI
	CFILL #15	CFILL #16
	CWCI	CFILL #17
	CXFER-3	P-RPS
	RPRS	POST EVA W/H20
PLT Antonelli	LOG	POST SLEEP
	MCIU*	INHIB
	PAIMU	DAPMU/D
	EXERCISE	XFER
	UPDATE	P/TV 07 S/U
	EVA 2 IVA SUPPORT	COND C/O
	MDDK XFER	
MS1 Reisman	LOG	POST SLEEP
	ILUM-OFF	SSRMS ICC RMVL POA
	SSRMS ICC S/U - EVA2	RMS MNVR CBL RPR
	SRMS EVA	SUPPORT
	RMS MNVR BATT R&R	SSRMS EVA 2 SUPT
	SSRMS MNVR SARJ CLR	P-RPS
	RPRS	POST EVA W/H20
MS2 Good	POST SLEEP	HYG BRK/ PREBREATHE
	14.7 RPRS	10.2 DPRS
	EVA PREP	EMU PURGE
	EMU PREBREATHE	C_LK DPRS
	P DPS	EGRS
	SETUP	WORKSITE PREP
	TEMP STOW BATT	BATTERY A/2 R&R
	BATTERY B/3 R&R	BATTERY C R&R
	CLNUP & INGRS	P-RPS
	RPRS	POST EVA W/H20
	EVA 2 - 6:30	
MS3 Bowen	POST SLEEP	HYG BRK/ PREBREATHE
	EVA PREP	EMU PURGE
	EMU PREBREATHE	C_LK DPRS
	P DPS	EGRS
	SETUP	LDRI CBL
	REPAIR	WORKSITE PREP
	TEMP STOW BATT	BATTERY A/2 R&R
	BATTERY B/3 R&R	BATTERY C R&R
	CLNUP & INGRS	P-RPS
	RPRS	POST EVA W/H20
MS4 Sellers	LOG	POST SLEEP
	MDDK#	SSRMS ICC RMVL POA
	SSRMS ICC S/U - EVA2	RMS MNVR CBL RPR
	SRMS EVA	SUPPORT
	RMS MNVR BATT R&R	SSRMS EVA 2 SUPT
	SSRMS MNVR SARJ CLR	EXERCISE

DAY/NIGHT
ORBIT 72 73 74 75 76 77 78 79 80
TDRS W E Z
ISS TDRS AVAIL
ORB ATT BIAS -XLV -ZVV
SSRMS POS MBS PDGF3 @ WS8

NOTES
*FILTER CK
#STATUS CHECK

FD06

GMT 05/19/10 (139)

MET Day 004

NO UNISOLATED EXERCISE [LDRI CABLE]

NO UNISOLATED EXERCISE [P6 BATT R&R]

REPLANNED

07 08 09 10 11 12 13 14 15 16 17 18

12 13 14 15 16 17 18 19 20 21 22 23 005/00

ISS	TDRS AVAIL	
ISS	ISS CDR Kotov	POST SLEEP; МБИ 12; POST SLEEP; DPC; МБИ 12 D/L; 21S STOW PREP; ХОЛТЕР; TEST; МБИ-21-CDR-EXE; 21S STOW PREP; TVIS; MIDDAY MEAL; DPART PREP; M1 INGR STUDY; M1 EQUIP PREP; DPART; PREP; TVIS
ISS	FE-1 Skvortsov	POST SLEEP; ЭКТБЖ; POST SLEEP; PW; DPC; PW; TBUCK; БМПФ1-I; TVIS; TBC КЛ152 RMV; IMS; ИП-1 MNT; TEX15; СИЗ ИПК 1M R&R; MIDDAY MEAL; СОЖ; M1 INGR STUDY; M1 EQUIP PREP; RSK1 ТОРУ SW UPD; VELO
ISS	FE-2 Caldwell-Dyson	POST SLEEP; HYG BRK/ HATCH CLS; EVA PREP; EMU; PURGE; EMU PREBREATHE; C_LK DPRS; PDPS; EMU BSAT; WHC MANUAL FILL; MIDDAY MEAL; TVIS; CEVIS; PW
ISS	FE-3 Kornienko	POST SLEEP; PW; DPC; PW; VELO; R-PAO CHRONICLE P/V; TVIS; СИЗ ИПК 1M R&R; MIDDAY MEAL; Ф-СГО-SURF-SMPL-FI1
ISS	FE-5 Noguchi	POST SLEEP; PW; DPC; ARED; WBC/O; TOCA; EHS-PWD WATER-CLCT; CEVIS; TOCA; PWD ANLS; MIDDAY MEAL; MCD/CFM; PRCS; EHS-SM WATER-CLCT; DATA XFR; RECLAIM; DPART PREP
ISS	FE-6 Creamer	ARED; P/TV-A; PW; DPC; HAM; TEST; CUCU-INH; POST SLEEP; OGS HOPA OPS; OGA RTRV; OGA-H2O ORU-R&R PT1; OGA STOW; SNSR CNT; MIDDAY MEAL; OGA-H2O; PT2 ORU-R&R; DPART PREP; GLOVE; CEVIS; OGA-H2O ORU-R&R PT3
	DAY/NIGHT	
	ORBIT	72 73 74 75 76 77 78 79 80
	SSRMS POS	MBS PDGF3 @ WS8
	ALL VHF	
	NOTES	

REPLANNED

FD06

GMT 05/19/10 (139) 19 20 21 22 23 05/20 01 02 03 04 05 06

MET Day 005 005/00 01 02 03 04 05 06 07 08 09 10 11 12

STS-132														
	CDR Ham	POST EVA W/H20	PRE SLEEP	EVA	TAGUP	PMC OCA	PRE SLEEP	SLEEP						POST SLEEP
	PLT Antonelli	MDDK XFER	XFER	TAGUP	XFER	BRIEF	ILLUM-ON	PRE SLEEP	EVA	TAGUP	PRE SLEEP	ISS EXTERNAL SURVEY / SLEEP	LOG	POST SLEEP
	MS1 Reisman	POST EVA W/H20	PRE SLEEP	EVA	TAGUP	PRE SLEEP	SLEEP							POST SLEEP
	MS2 Good	POST EVA W/H20	PRE SLEEP	EVA	TAGUP	PRE SLEEP	SLEEP						ASPIRIN	POST SLEEP
	MS3 Bowen	POST EVA W/H20	PRE SLEEP	EVA	TAGUP	PRE SLEEP	SLEEP						ASPIRIN / LOG	POST SLEEP
	MS4 Sellers	EXERCISE	GLCDR-ON	MDDK#	PRE SLEEP	EVA	TAGUP	PRE SLEEP	SLEEP				LOG	POST SLEEP

DAY/NIGHT

ORBIT 80 81 82 83 84 85 86 87 88

TDRS W E Z

ISS TDRS AVAIL

ORB ATT BIAS -XLV -ZVV

SSRMS POS MBS PDGF3 @ WS8

NOTES #STATUS CHECK

REPLANNED

FD06

GMT 05/19/10 (139)

MET Day 005

ISS	TDRS AVAIL	005/00	19	01	20	02	21	03	22	04	23	05	05/20	06	01	07	02	08	03	09	04	10	05	11	06	12

ISS	ISS CDR Kotov	TVIS		PS	DPC	PRE SLEEP-ISS									SLEEP											
ISS	FE-1 Skvortsov	VELO	ЭКТБЖ	PS	DPC	PRE SLEEP-ISS		БМПФ1-Т	PS	МБИ12-I					SLEEP											
ISS	FE-2 Caldwell-Dyson	PW	BSA-I	PS	DPC	IMAGE	PRE SLEEP-ISS								SLEEP											
ISS	FE-3 Kornienko	МБИ 16		PS	DPC	PRE SLEEP-ISS									SLEEP											
ISS	FE-5 Noguchi	PW		PS	MPC	DPC	PRE SLEEP-ISS			MPC					SLEEP											
ISS	FE-6 Creamer	P/TV-D	VDSCAP	PW	PS	DPC	PRE SLEEP-ISS								SLEEP											

DAY/NIGHT										
ORBIT	80	81	82	83	84	85	86	87	88	
SSRMS POS	MBS PDGF3 @ WS8									
ALL VHF	—	—	—	—						
NOTES										

5

STS-132 FD (06)

REPLANNED

GMT Date 05/19 (139) | W | TDRS E | Z | D/N | DORB 14 | DORB 15 | DORB 1 | DORB 2 | DORB 72 | DORB 73 | DORB 74 | DORB 75 | MET Day 004 | STS ATI | CDR HAM | PLT ANTONELLI | MS1 REISMAN | NOTES

12:00 — 07:00 — 13:00 — 08:00 — 14:00 — 09:00 — 15:00 — 10:00 — 16:00

STS ATI: BIAS-XLV-ZVV

CDR HAM

POST-SLEEP ACTIVITY
(ORB OPS, CREW SYS)

PRIVATE MEDICAL CONFERENCE
L9 PAYLOAD STATION AUDIO A/G (two)-OFF
Perform via A/G2

POST-SLEEP ACTIVITY
(ORB OPS, CREW SYS)

EVA SYSTEMS: 1.211 HYGIENE BREAK
Steps 21-25
MCC-H performs Step 23

EVA SYSTEMS: 1.216 EVA PREP

EVA SYSTEMS: 1.220 EMU PURGE

EVA SYSTEMS: 1.225 EMU PREBREATHE

PLT ANTONELLI

SLEEP LOGBOOK (SDBI 1634)
POST-SLEEP ACTIVITY
(ORB OPS, CREW SYS)

FD06 EZ ACTIVITIES:
√OCAC FILTER
√MDDK DUCT SCREEN
TEPC (STATUS CHECK)
(ORB OPS, CREW SYS)
HARD REBOOT ALL PGSCs EXCEPT:
STS-1(OCA ROUTER), STS-6(WLES)
& STS-5(RPOP2)

L17 Check MCIU filter screen
EVA 2 INHIBIT PAD
(EVA, TIMELINES)

IMU STAR OF OPPTY ALIGN (ORB OPS, GNC)
Prior to ICC Removal from POA: [A]

EXERCISE

MS1 REISMAN

SLEEP LOGBOOK (SDBI 1634)
POST-SLEEP ACTIVITY
(ORB OPS, CREW SYS)

[A] √A12/FREE/VERN
DAP PERMANENT EDIT: A12: VERN ROT RATE = 0.05

ILLUMINATOR OPS(CUE CARD,TV)ILLUM OFF-ALL
ROBO: 2.201 ICC SETUP FOR EVA 2
Steps 1-6

STS-132 FD (06)

REPLANNED

GMT Date 05/19 (139) | W | TDRSE | Z | D/N | DORB | ORB | MET Day 004 | STS ATT

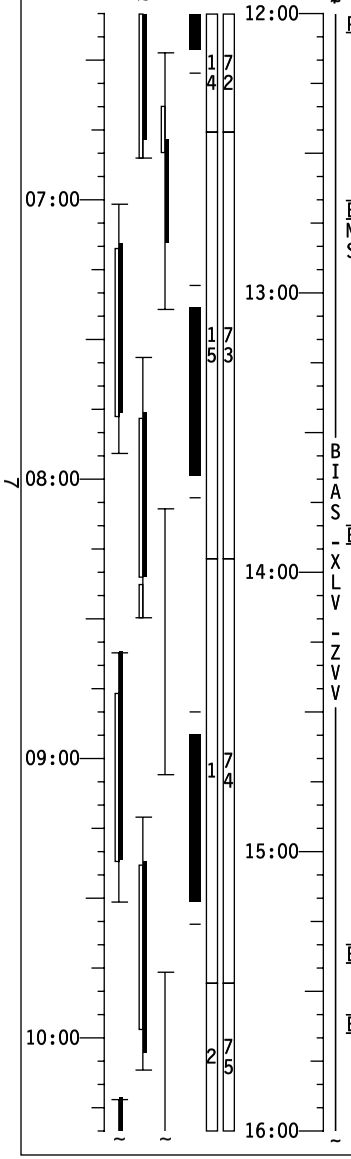

BIAS - XLV - ZVV

MS2 GOOD	MS3 BOWEN	MS4 SELLERS	NOTES
POST-SLEEP ACTIVITY (ORB OPS, CREW SYS)	POST-SLEEP ACTIVITY (ORB OPS, CREW SYS)	SLEEP LOGBOOK (SDBI 1634) POST-SLEEP ACTIVITY (ORB OPS, CREW SYS)	
EVA SYSTEMS: 1.211 HYGIENE BREAK MCC-H performs Steps 1-4, 16-20 & 23 Start NET 8:40 hrs from the end of: 1.206 10.2 PSIA CAMPOUT MASK PREBREATHE	EVA SYSTEMS: 1.211 HYGIENE BREAK MCC-H performs Steps 1-4, 16-20 & 23 Start NET 8:40 hrs from the end of: 1.206 10.2 PSIA CAMPOUT MASK PREBREATHE		
EVA SYSTEMS: 1.216 EVA PREP	EVA SYSTEMS: 1.216 EVA PREP		
		CGBA STATUS CHECK (Cue Card) ROBO: 2.201 ICC SETUP FOR EVA 2 Steps 1-6	
EVA SYSTEMS: 1.220 EMU PURGE	EVA SYSTEMS: 1.220 EMU PURGE		
EVA SYSTEMS: 1.225 EMU PREBREATHE	EVA SYSTEMS: 1.225 EMU PREBREATHE		

STS-132 FD (06)

REPLANNED

GMT Date 05/19 (139) | W | TDRSE | Z | D/N | DORB | ORB | MET Day 004 | STS ATT

CDR HAM	PLT ANTONELLI	MS1 REISMAN	NOTES
EVA SYSTEMS: 1.225 EMU PREBREATHE	EXERCISE	ROBO: 2.201 ICC SETUP FOR EVA 2 Steps 7-9	
EVA SYSTEMS: CREWLOCK DEPRESS/REPRESS CUE CARD	DAILY TRANSFER LIST UPDATE Ref. Transfer List & MSG 044	EVA OBSS CABLE REPAIR Ref. MSG 049, Steps 1-2	
	P/TV07 EVA (PHOTO/TV, SCENES) SETUP		
EVA SYSTEMS: CREWLOCK POST DEPRESS (CC)			
N2 REPRESS INIT [B]	[B] N2 REPRESS USING P/L N2 VLVS (ORB OPS, ECLS) Perform Steps 3-7 MCC will TMBU S/W FDA, H/W FDA already INH.		
CWC-I FILL (ORB OPS, ECLS) Fill CWC-I #12, Perform Parts D & E Ref. MSG 016			
CWC-I FILL (ORB OPS, ECLS) Fill CWC-I #13, Perform Parts D & E Ref. MSG 016		EVA OBSS CABLE REPAIR Ref. MSG 049, Steps 3-4	NO UNISOL EXERCISE [LDRI CABLE]
CWC-I FILL (ORB OPS, ECLS) Fill CWC-I #14, Perform Parts D & E Ref. MSG 016		EVA OBSS CABLE REPAIR Ref. MSG 049, Steps 5-6	
CWC-I TRANSFER Transfer 3 CWC-I to ISS		ROBO: 3.201 EVA 2 SUPPORT	
P/TV07 EVA (PHOTO/TV, SCENES) OPS	IVA SUPPORT EVA 2		
[C] N2 REPRESS USING P/L N2 VLVS (ORB OPS, ECLS) On MCC go, perform steps 8-12 MCC will TMBU S/W FDA. Do not ENA H/W.			NO UNISOL EXERCISE [P6 BATT R&R]
N2 REPRESS TERM (On MCC GO) [C]			
MEAL			

Time scale: 11:00, 12:00, 13:00, 14:00; 16:00, 17:00, 18:00, 19:00, 20:00

Stations: 2, 3, 4; 7, 5, 7, 6, 7, 7

BIAS-XLV-ZVV

8

STS-132 FD (06)

REPLANNED

GMT Date 05/19 (139) | W | TDRS E | Z | D/N | DORB 2 | DORB 3 | DORB 4 | DORB 75 | DORB 76 | DORB 77 | MET Day 004 | STS ATT

MS2 GOOD | MS3 BOWEN | MS4 SELLERS | NOTES

16:00

EVA SYSTEMS: 1.225 EMU PREBREATHE

EVA SYSTEMS: 1.225 EMU PREBREATHE

ROBO: 2.201 ICC SETUP FOR EVA 2
Steps 7-9

EVA SYSTEMS: CREWLOCK DEPRESS/REPRESS CUE CARD

EVA SYSTEMS: CREWLOCK DEPRESS/REPRESS CUE CARD

EVA OBSS CABLE REPAIR
Ref. MSG 049, Steps 1-2

11:00

17:00

EVA SYSTEMS: CREWLOCK POST DEPRESS (CC)

EVA SYSTEMS: CREWLOCK POST DEPRESS (CC)

EGRESS

EGRESS

SETUP

SETUP

EVA OBSS CABLE REPAIR
Ref. MSG 049, Steps 3-4

NO UNISOL EXERCISE
[LDRI CABLE]

LDRI CABLE REPAIR

EXERCISE CONSTRAINT

12:00

BIAS-XLV-ZVV

EVA OBSS CABLE REPAIR
Ref. MSG 049, Steps 5-6

18:00

WORKSITE PREP

ROBO: 3.201 EVA 2 SUPPORT

WORKSITE PREP

13:00

19:00

TEMP-STOW BATTERY

EXERCISE CONSTRAINT

TEMP-STOW BATTERY

EXERCISE CONSTRAINT

NO UNISOL EXERCISE
[P6 BATT R&R]

14:00

BATTERY A/2 R&R

EXERCISE CONSTRAINT

BATTERY A/2 R&R

EXERCISE CONSTRAINT

20:00

STS-132 FD (06)

REPLANNED

GMT Date 05/19 (139) | W | TDRSE | Z | D/N | DORB | ORB | MET Day 004 | STS ATT

20:00 | 15:00 | 16:00 | 17:00 | 18:00 | 21:00 | 22:00 | 23:00 | 00:00

5 7 8 | 6 7 9 | 7 8 0

BIAS - XLV - ZVV

CDR HAM

MEAL

P/TV07 EVA
(PHOTO/TV, SCENES) OPS

CWC-I FILL (ORB OPS, ECLS)
Fill CWC-I #15, Perform Parts D & E
Ref. MSG 016

CWC-I FILL (ORB OPS, ECLS)
Fill CWC-I #16, Perform Parts D & E
Ref. MSG 016

CWC-I FILL (ORB OPS, ECLS)
Fill CWC-I #17, Perform Parts D,E & F
Ref. MSG 016

CWC-I TRANSFER
Transfer 3 CWC-I to ISS

EVA SYSTEMS: PRE REPRESS (CC)

EVA SYSTEMS: CREWLOCK REPRESS (CC)

EVA SYSTEMS: 1.240 POST EVA (With H2O)
Steps 37,39 & 68 not req'd
MCC will perform Steps 43 & 67

Ref: STS-132 CONSUMABLES CC
In Step 60, temp stow HL Batts
for BSA Init

PLT ANTONELLI

IVA SUPPORT EVA 2

D Use ISS CWC S/N 1054, located at NOD2D5. After changeout, transfer Orbiter CWC S/N 6005 to NOD2D5 for processing. Notify MCC when complete.

SHUTTLE CONDENSATE COLLECTION D
(ORB OPS, ECLS)
Perform CHANGEOUT

TRANSFER OPS
Ref. Middeck Transfer List & MSG 044

MS1 REISMAN

ROBO: 3.201 EVA 2 SUPPORT

ROBO: 3.201 EVA 2 SUPPORT
Steps 11,12

EVA SYSTEMS: PRE REPRESS (CC)

EVA SYSTEMS: CREWLOCK REPRESS (CC)

EVA SYSTEMS: 1.240 POST EVA (With H2O)
Steps 37,39 & 68 not req'd
MCC will perform Steps 43 & 67

Ref: STS-132 CONSUMABLES CC
In Step 60, temp stow HL Batts
for BSA Init

NOTES

NO UNISOL EXERCISE
[P6 BATT R&R]

FLT PLN/132/FLIGHT

10

STS-132 FD (06)

REPLANNED

GMT Date 05/19 (139) | W | TDRSE | Z | D/N | DORB | ORB | MET Day 004 | STS ATT

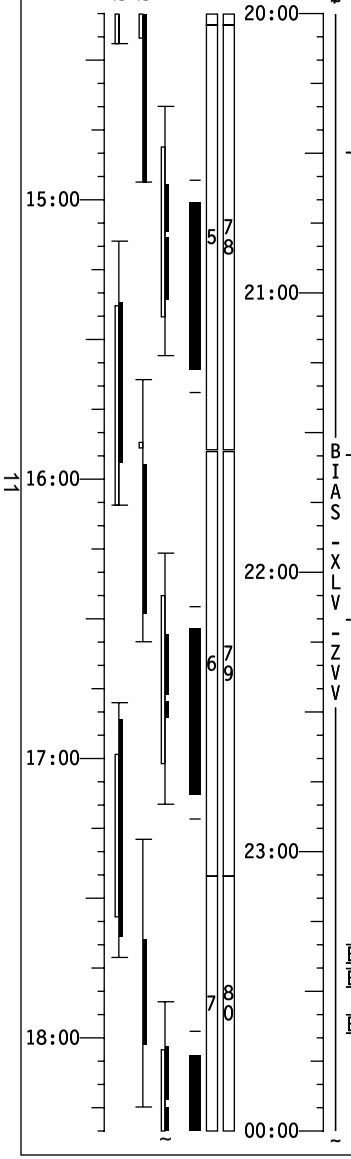

BIAS - XLV - ZVV

MS2 GOOD	MS3 BOWEN	MS4 SELLERS	NOTES
BATTERY A/2 R&R EXERCISE CONSTRAINT	BATTERY A/2 R&R EXERCISE CONSTRAINT	ROBO: 3.201 EVA 2 SUPPORT	**NO UNISOL EXERCISE** [P6 BATT R&R]
BATTERY B/3 R&R EXERCISE CONSTRAINT	BATTERY B/3 R&R EXERCISE CONSTRAINT		
BATTERY C R&R EXERCISE CONSTRAINT	BATTERY C R&R EXERCISE CONSTRAINT		
EVA 2 CLEANUP AND INGRESS	EVA 2 CLEANUP AND INGRESS	ROBO: 3.201 EVA 2 SUPPORT Steps 11,12	
EVA SYSTEMS: PRE REPRESS (CC) EVA SYSTEMS: CREWLOCK REPRESS (CC) EVA SYSTEMS: 1.240 POST EVA (With H2O) Steps 37,39 & 68 not req'd MCC will perform Steps 43 & 67 Ref: STS-132 CONSUMABLES CC In Step 60, temp stow HL Batts for BSA Init	EVA SYSTEMS: PRE REPRESS (CC) EVA SYSTEMS: CREWLOCK REPRESS (CC) EVA SYSTEMS: 1.240 POST EVA (With H2O) Steps 37,39 & 68 not req'd MCC will perform Steps 43 & 67 Ref: STS-132 CONSUMABLES CC In Step 60, temp stow HL Batts for BSA Init	EXERCISE	

FLT PLN/132/FLIGHT

11

STS-132 FD (06)

REPLANNED

GMT Date 05/19 (139) | W | TDRSE | Z | D/N | DORB | ORB | MET Day 005 | STS ATT | CDR HAM | PLT ANTONELLI | MS1 REISMAN | NOTES

19:00 | 20:00 | 21:00 | 22:00

00:00 | 01:00 | 02:00 | 03:00 | 04:00

BIAS-XLV-ZVV

CDR HAM	PLT ANTONELLI	MS1 REISMAN
EVA SYSTEMS: 1.240 POST EVA (With H20) Steps 37,39 & 68 not req'd MCC will perform Steps 43 & 67 Ref: STS-132 CONSUMABLES CC In Step 60, temp stow HL Batts for BSA Init	TRANSFER OPS Ref. Middeck Transfer List & MSG 044 TRANSFER TAGUP Coordinate with transfer counterpart TRANSFER BRIEF Call down status to MCC	EVA SYSTEMS: 1.240 POST EVA (With H20) Steps 37,39 & 68 not req'd MCC will perform Steps 43 & 67 Ref: STS-132 CONSUMABLES CC In Step 60, temp stow HL Batts for BSA Init
PRE-SLEEP ACTIVITY (ORB OPS, CREW SYS) Air Quality Report	ILLUMINATOR OPS(CUE CARD,TV)ILLUM ON - A,D PRE-SLEEP ACTIVITY (ORB OPS, CREW SYS)	PRE-SLEEP ACTIVITY (ORB OPS, CREW SYS)
EVA TAGUP Private Conference via S/G 2	EVA TAGUP Private Conference via S/G 2	EVA TAGUP Private Conference via S/G 2
NETMEETING VIDEO CONFERENCING (ORB OPS, OCA) Private Medical Conference Omit steps 1.2 and 3, Use A/G2 for audio, Inform MCC which PGSC will be used PRE-SLEEP ACTIVITY (ORB OPS, CREW SYS)	PRE-SLEEP ACTIVITY (ORB OPS, CREW SYS)	PRE-SLEEP ACTIVITY (ORB OPS, CREW SYS)
SLEEP	SLEEP	SLEEP

WAKE UP AT 5/11:30

12

STS-132 FD (06)

REPLANNED

GMT Date 05/19 (139) | W | TDRSE | Z | D/N | DORB | ORB | MET Day 005 | STS ATT | MS2 GOOD | MS3 BOWEN | MS4 SELLERS | NOTES

19:00 | 20:00 | 21:00 | 22:00

00:00 | 01:00 | 02:00 | 03:00 | 04:00

BIAS-XLV-ZVV

MS2 GOOD	MS3 BOWEN	MS4 SELLERS
EVA SYSTEMS: 1.240 POST EVA (With H20) Steps 37,39 & 68 not req'd MCC will perform Steps 43 & 67 Ref: STS-132 CONSUMABLES CC In Step 60, temp stow HL Batts for BSA Init	EVA SYSTEMS: 1.240 POST EVA (With H20) Steps 37,39 & 68 not req'd MCC will perform Steps 43 & 67 Ref: STS-132 CONSUMABLES CC In Step 60, temp stow HL Batts for BSA Init	EXERCISE GLACIER INITIAL POWER ON(ASSY OPS,PAYLOADS) CGBA STATUS CHECK (Cue Card) PRE-SLEEP ACTIVITY (ORB OPS, CREW SYS)
PRE-SLEEP ACTIVITY (ORB OPS, CREW SYS)	PRE-SLEEP ACTIVITY (ORB OPS, CREW SYS)	
EVA TAGUP Private Conference via S/G 2	EVA TAGUP Private Conference via S/G 2	EVA TAGUP Private Conference via S/G 2
PRE-SLEEP ACTIVITY (ORB OPS, CREW SYS)	PRE-SLEEP ACTIVITY (ORB OPS, CREW SYS)	PRE-SLEEP ACTIVITY (ORB OPS, CREW SYS)
SLEEP	SLEEP	SLEEP

WAKE UP AT 5/11:30

13

3-63

FLT PLN/132/FLIGHT

Good Morning Atlantis!!!!

Thanks for the outstanding job installing MRM1!!!

Have another great EVA day!!!

YOUR CURRENT ORBIT IS: 191 X 184 NM

NOTAMS - (ONE CHANGE: ADDED EDF)

EDW -	EDW 22L/04R IN USE. EDT 22R/04L CLOSED FOR CONSTRUCTION.
EDW -	LAKEBED RWYS 15/33 GREEN. 18L RED.
NOR -	LAKEBED RWYS GREEN.
NTU -	RWY 05R/23L CLSD.
FOK -	CLOSED.
FMH -	RWY 23 APCH LTS OTS.
DOV -	RWY 14/32 CLSD 1100 - 2100.
EDF -	TACAN EDF81 OTS.
YYT -	TACAN UYT23 AZIMUTH OTS.
AMB -	RWY 15/33 REQUIRES 30MIN PN TO CLEAR WIP.
PTN -	CLSD.
IKF -	NOT USABLE. NO AGREEMENT.
BEN -	NOT RECOMMENDED/NOT SUPPORTED.

<u>NEXT 2 PLS OPPORTUNITIES:</u>

EDW22	ORB 80 – 4/23:59 BKN300	7	240/06P09
EDW22	ORB 95 – 5/22:49 SKC	7	250/08P14

<u>OMS TANK FAIL CAPABILITY:</u>

L or R OMS FAILS: NO

<u>LEAKING OMS PRPLT BURN:</u>

L or R OMS LEAK: ALWAYS BURN RETROGRADE

<u>OMS QUANTITIES(%)</u>

L OMS	OX = 36.77	R OMS	OX = 37.23
	FU = 36.79		FU = 36.89

FOR CURRENT QTYS, SUBTRACT INCN’T COUNTER

DELTA V AVAILABLE:

OMS	390 FPS
ARCS (TOTAL ABOVE QTY1)	39 FPS
TOTAL IN THE AFT	429 FPS
ARCS (TOTAL ABOVE QTY2)	72 FPS
FRCS (ABOVE QTY 1)	37 FPS
AFT QTY 1	84 %
AFT QTY 2	46 %

THERE ARE NO FAILURE/IMPACT/WORK AROUNDS FOR TODAY.

Good morning Ken and Tony,

You are 58% complete with transfer and ahead of schedule. We've added a few items for you to work on today. We've also uplinked the return middeck locker layout and the return location sort. These will be helpful when you're closing out return locations. MMACS will be uplinking return bag drawings to help you configure the 5MLEs and a packing plan for the EDV in the Seat 7 Bag. You guys are doing a great job!

The Transfer List Excel file, FD06_Transfer_List_STS132.xls, is located on the KFX machine in **C:\OCA-up\transfer.**

For ISS, the Transfer List Excel file, FD06_Transfer_List_STS132.xls, is located in **K:\OCA-up\transfer.**

Transfer Questions/Comments

Work lights: To clarify – the return work lights shouldn't be broken – they're just getting older and the ground team wanted to swap them out with newer ones. To confirm – the ones you are delivering are S/N 1016 and 1017. The ones on station should be S/N 1018 and 1019.

If these cannot be found, please stand down on the swap and let us know – we'll get you some more words.

Grumpy: Unfortunately, we cannot let the ISS keep Grumpy. Shuttle needs the multimeter, because it provides IFM capability required by CILs. Ref IFM C/L (W-53)

FD06 Transfer Choreography:

- Soichi: Return water samples per EHS WATER activities (Item 728, 731, and 732)
- MDDK XFER:
    - Continue return transfer

Change Pages:
Please incorporate changes as follows:

In the Transfer List **LAYOUTS** tab
Add the following pages:
Layouts– 8

In the Transfer List **RESUPPLY** tab
Replace the following pages:
Resupply Page – 9

In the Transfer List **RETURN** tab
Replace the following pages:
Return Page – 1, 4, 7, 9

Add the following page:
Return Page – 10

In the Transfer List **RETURN LOCATION SORT** tab
Add the following pages:
Ret Loc Sort– 1-4

FD07 Transfer Choreography:

- T.J.: Transfer return GSC after GSC OPS activity (Item 723)
- Soichi: Transfer return samples after CWQMK activities (Item 734 and 735)
- T.J. and Tracy: Transfer CDRA Bed prior to CDRA-INSTALL activity (Item 10.1)
- MDDK XFER:
    - Tony: Complete LiOH Swap (item 37 and 724)
    - Continue return transfers

Let us know if you have any questions!
- The ULF4 Transfer Team

STS-132/ULF4 FD05 - MMT Summary

The MMT met today to review the orbiter systems and mission progress.

Atlantis continues to perform flawlessly.

Damage Assessment Team: Although the regular suite of imagery was not obtained (due to the PTU problem), the teams used all the available assets (FD2 IDC, RPM photos, EVA photos, Ascent Video, WLES, etc.) to perform an engineering assessment on the thermal protection system. The DAT cleared the TPS for Entry based on these assessments. For the RCC, the DAT has high confidence, based on all available data, that there were no signatures indicating any damage from Ascent debris. Based on these conclusions, there were no requirements from the DAT for additional docked surveys. Even without the full suite of imagery the MMT felt that is was a very low risk to wait until Late Inspection for the next survey.

Although there were no requirements for additional surveys, MOD was asked to evaluate, in more detail, the ability to perform a docked inspection on FD7 or FD9 and what mission content or SCSC violations would be incurred. The assumption for the additional surveys are that the ITVC/LDRI were recovered (with the PTU EVA 2 actions). Also, based on the preliminary CHIT data for areas that didn't get the complete imagery, the required survey time is approximately 3 hrs. Based on comments from the 131 lessons learned debriefs, MOD and FCOD were also given the action to review with the 132 crew the proposed docked survey timelines and the tradeoffs being discussed.

Good Morning,

Below you will find the 5-MLE bag layouts. The current 5-MLE bag configurations optimize the weight and c.g. of the bag stacks.

- The STS-132 Middeck Stowage Team

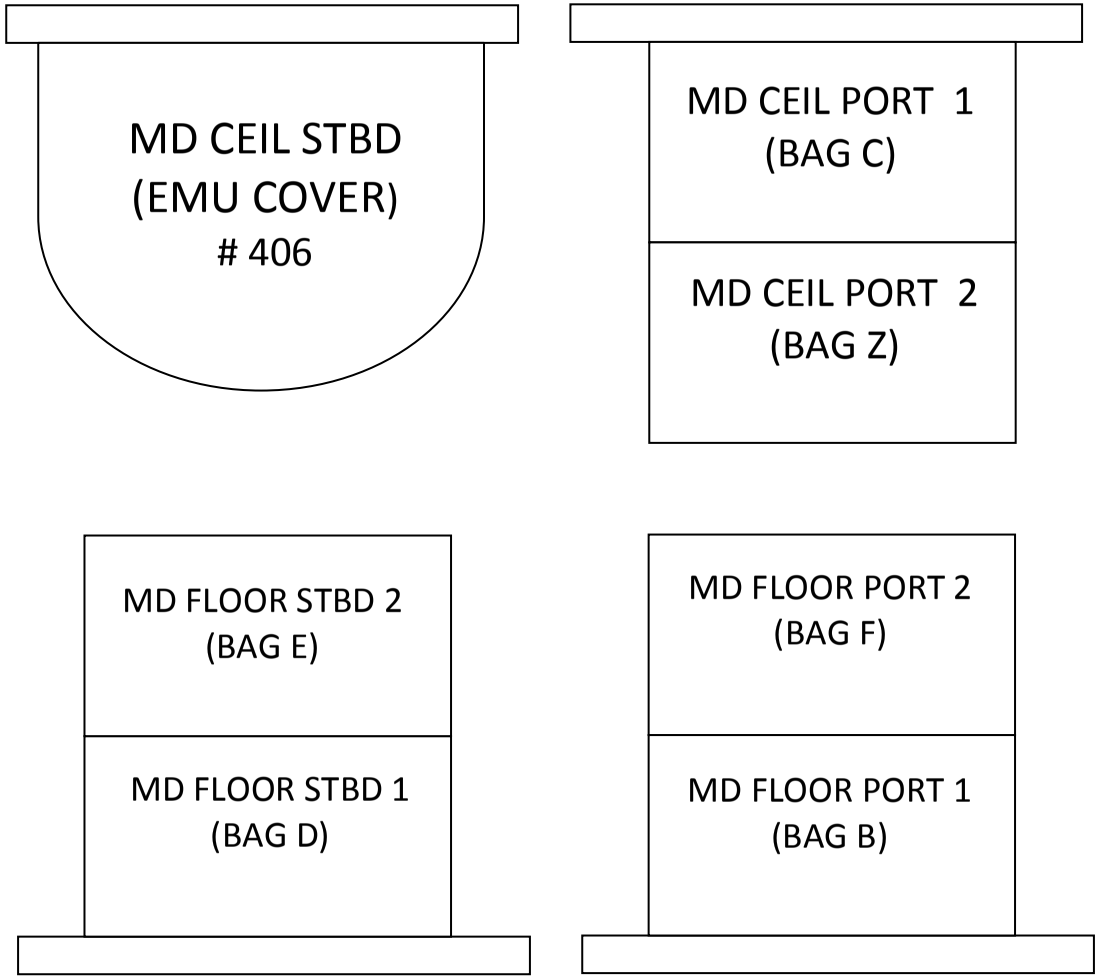

VIEW: DITCH LOOKING AFT

MD FLOOR PORT 2 – BAG F

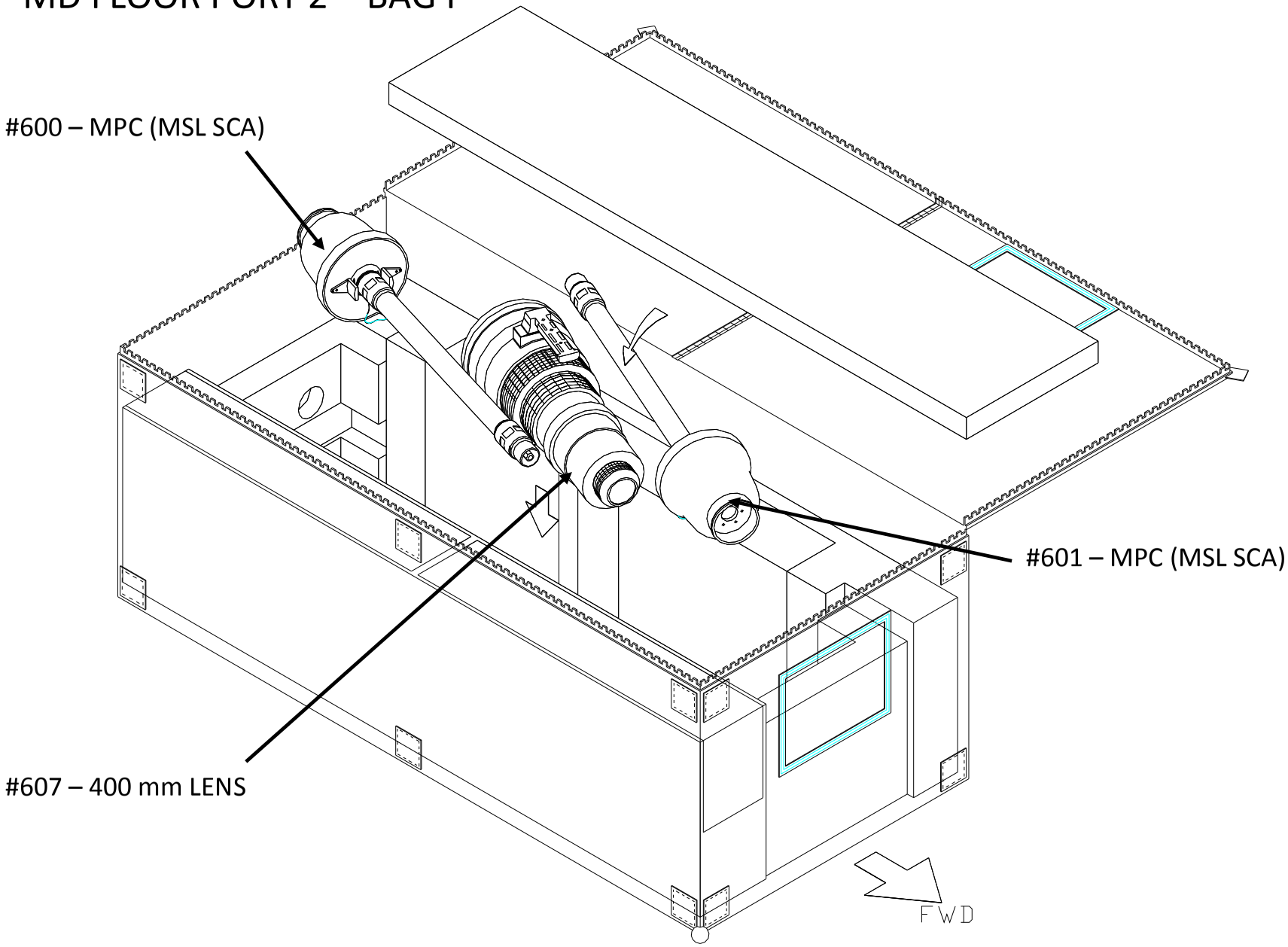

MD FLOOR PORT 1 (BAG B)

NOTE: RETURN ORIENTATION IS REVERSE OF ASCENT (5-MLE DECAL POCKET WILL FACE AFT)

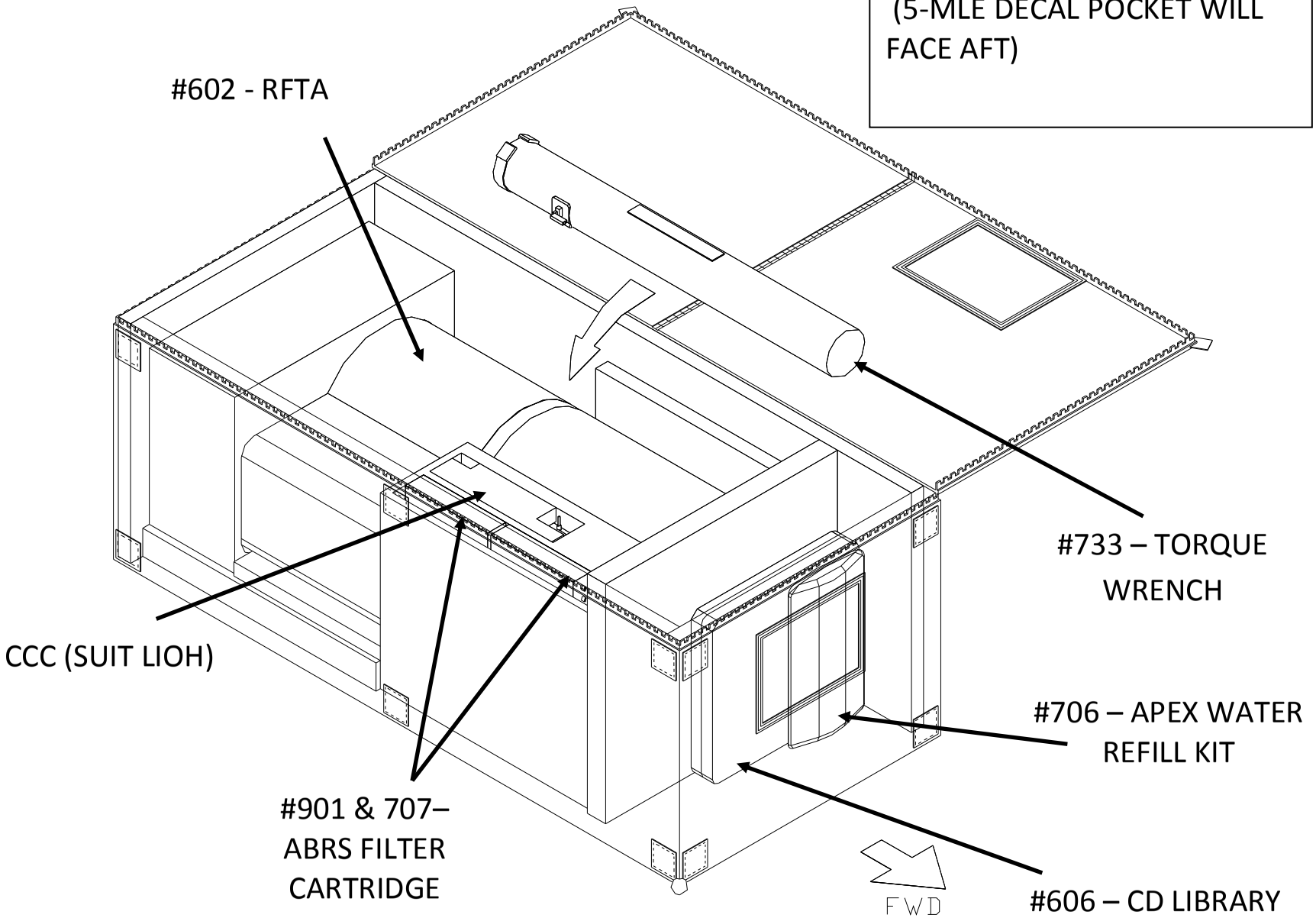

MD FLOOR STBD 2 – BAG E

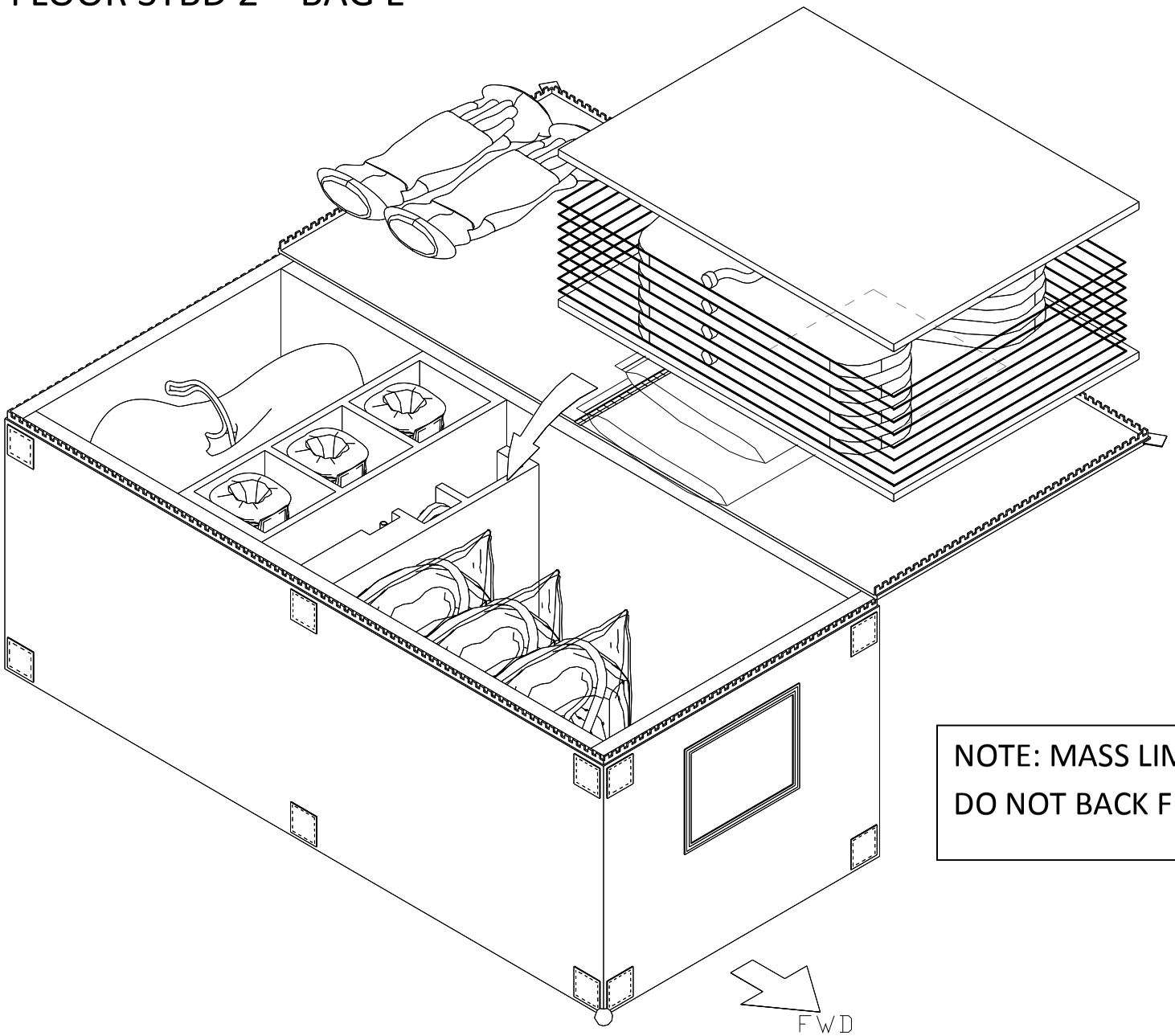

NOTE: MASS LIMITED. PLEASE DO NOT BACK FILL.

MD FLOOR STBD1 – BAG D

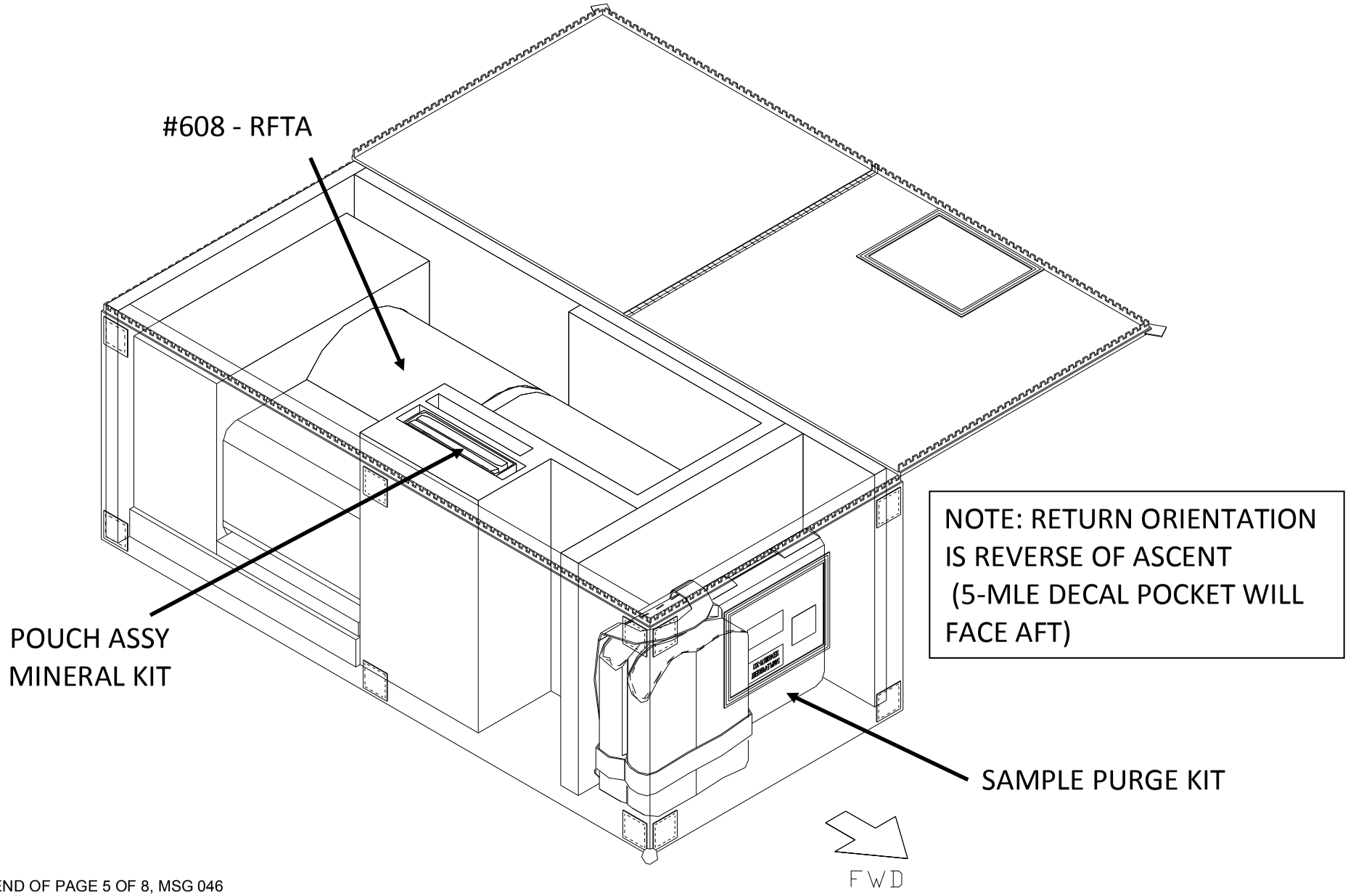

NOTE: RETURN ORIENTATION IS REVERSE OF ASCENT (5-MLE DECAL POCKET WILL FACE AFT)

MD CEIL PORT 1 – BAG C

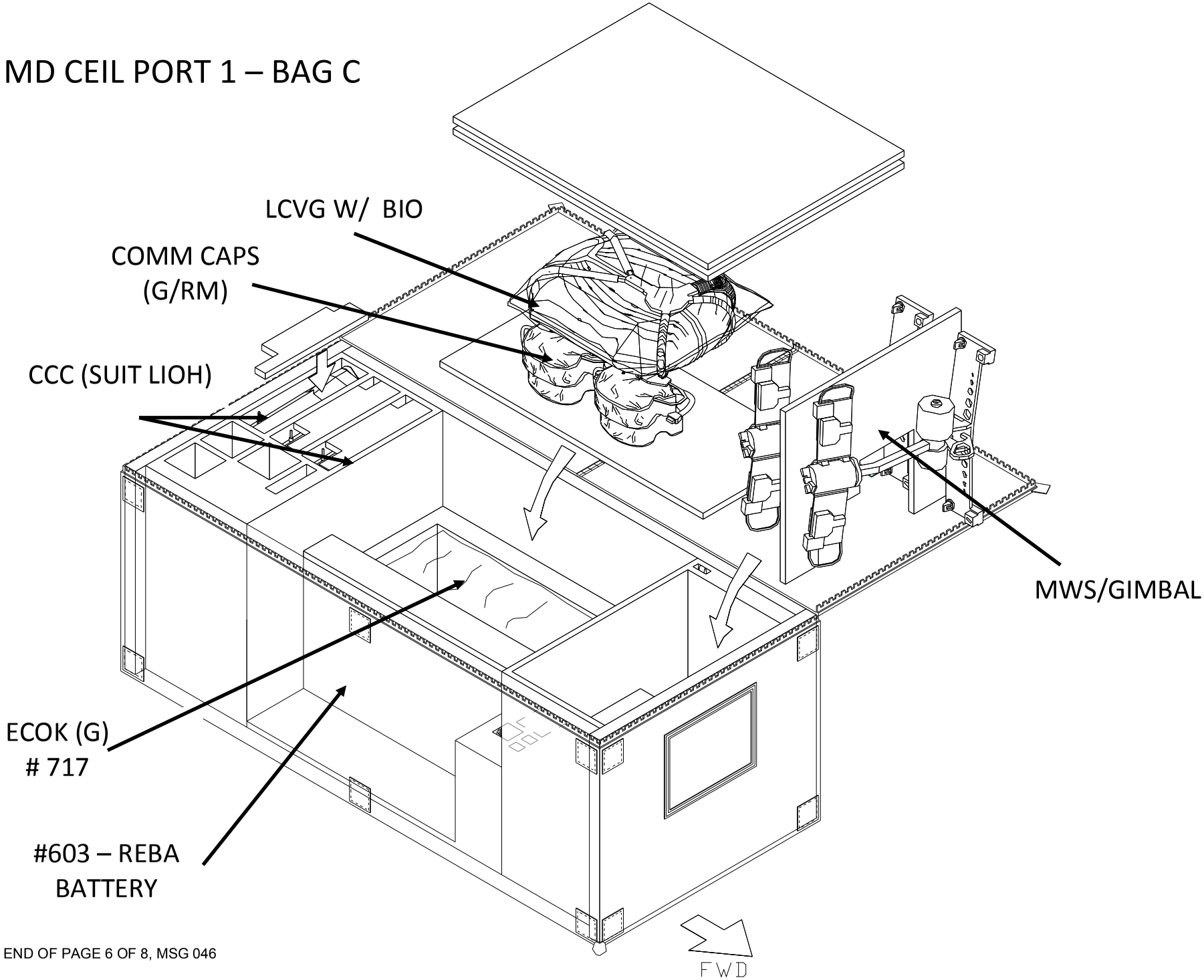

MD CEIL PORT 2 – BAG Z

NOTE: ALL FOAM IN THIS BAG IS FROM BAG A (ASCENT)

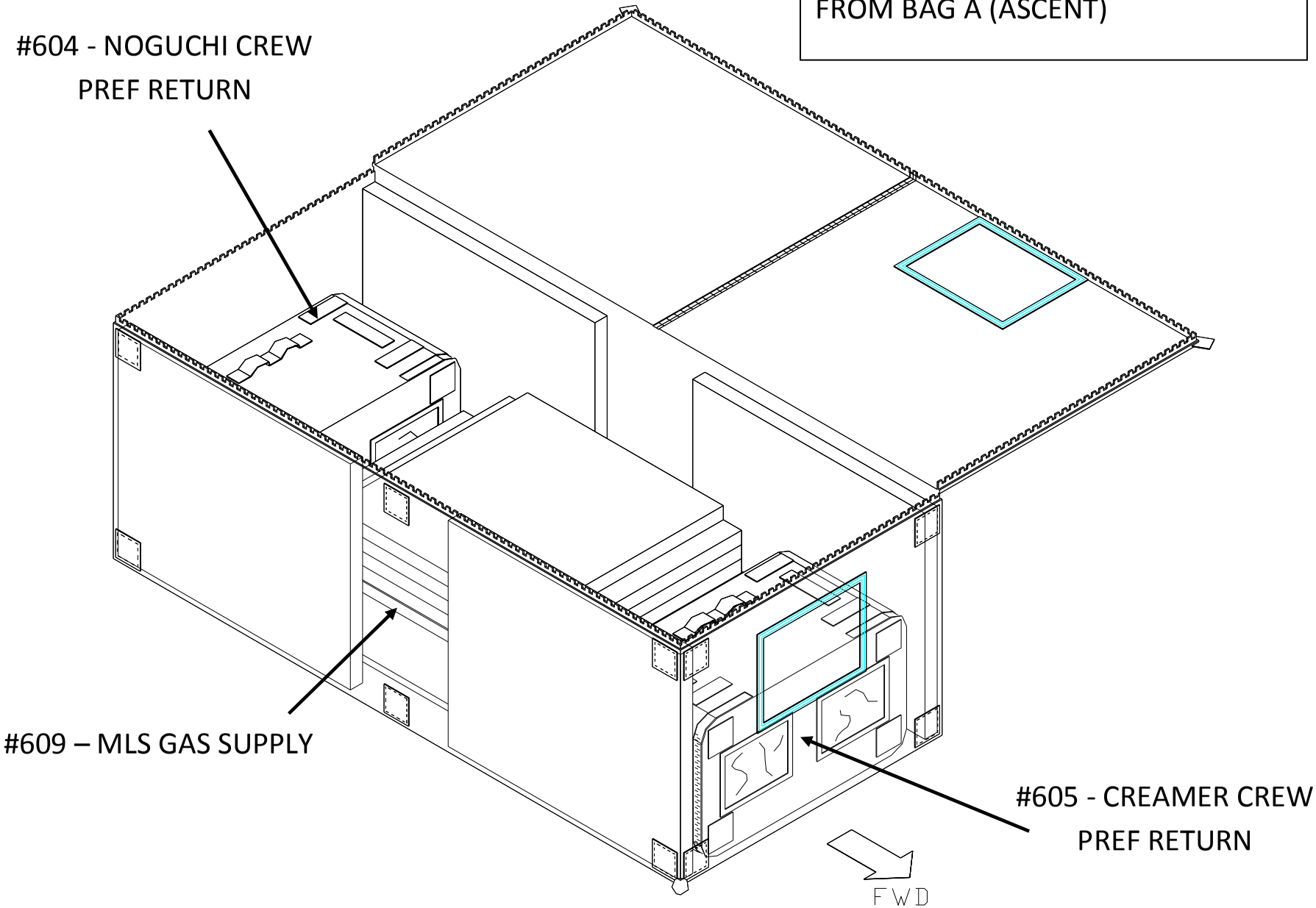

#900 - COMMEMORATIVE ITEMS – 0.5 CTB

NOTE: CONFIGURATION BELOW IS REQUIRED TO MAXIMIZE STOWAGE EFFICIENCY. FINAL LOCATION OF THIS 0.5 CTB IS MA16G

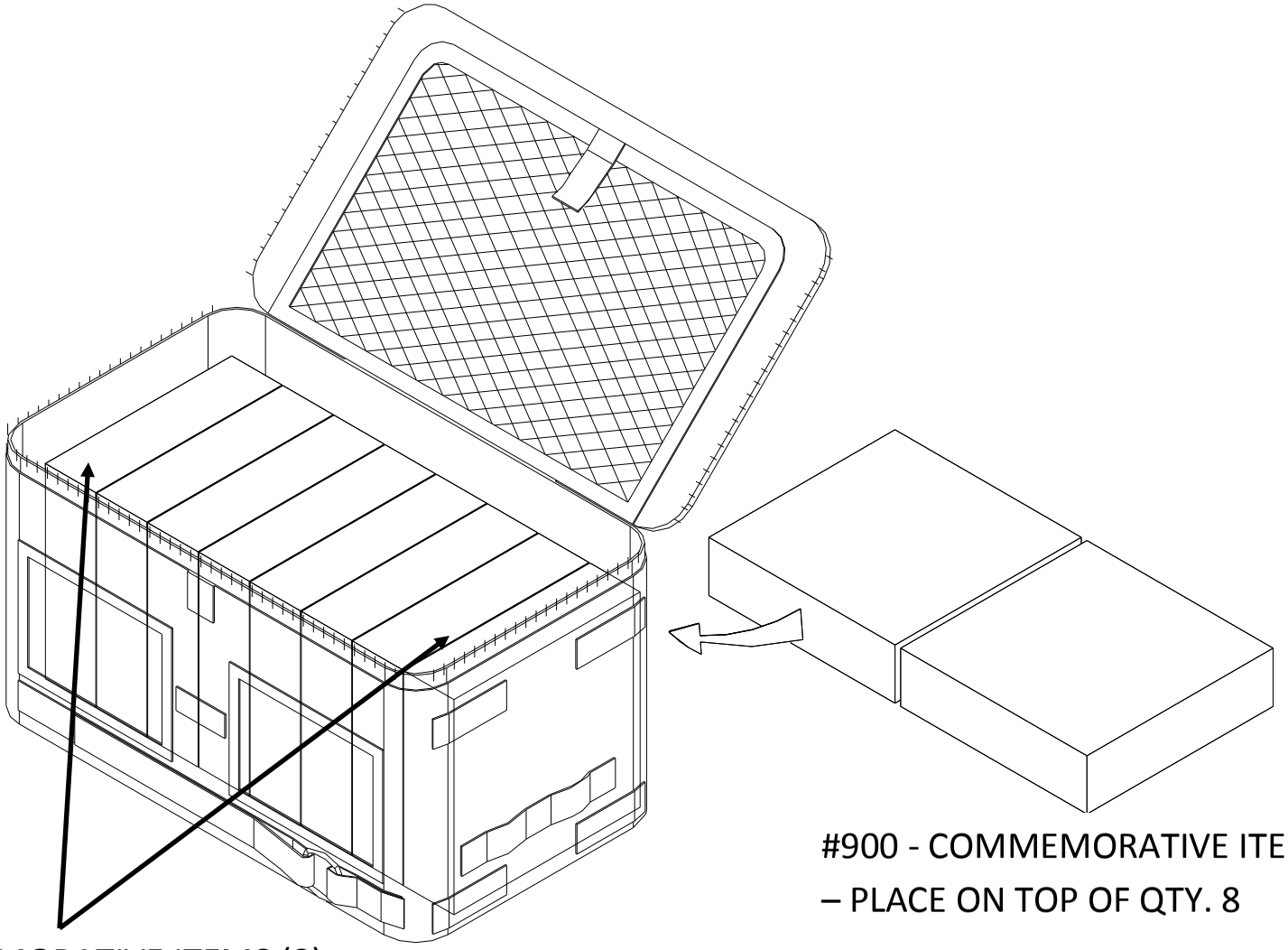

#900 - COMMEMORATIVE ITEMS (2) – PLACE ON TOP OF QTY. 8

#900 - COMMEMORATIVE ITEMS (8)

END OF PAGE 8 OF 8, MSG 046

Good Morning,

Below you will find a procedure to safely stow the EDV Item # 908 in the Seat 7 Bag.

- The STS-132 Middeck Stowage Team

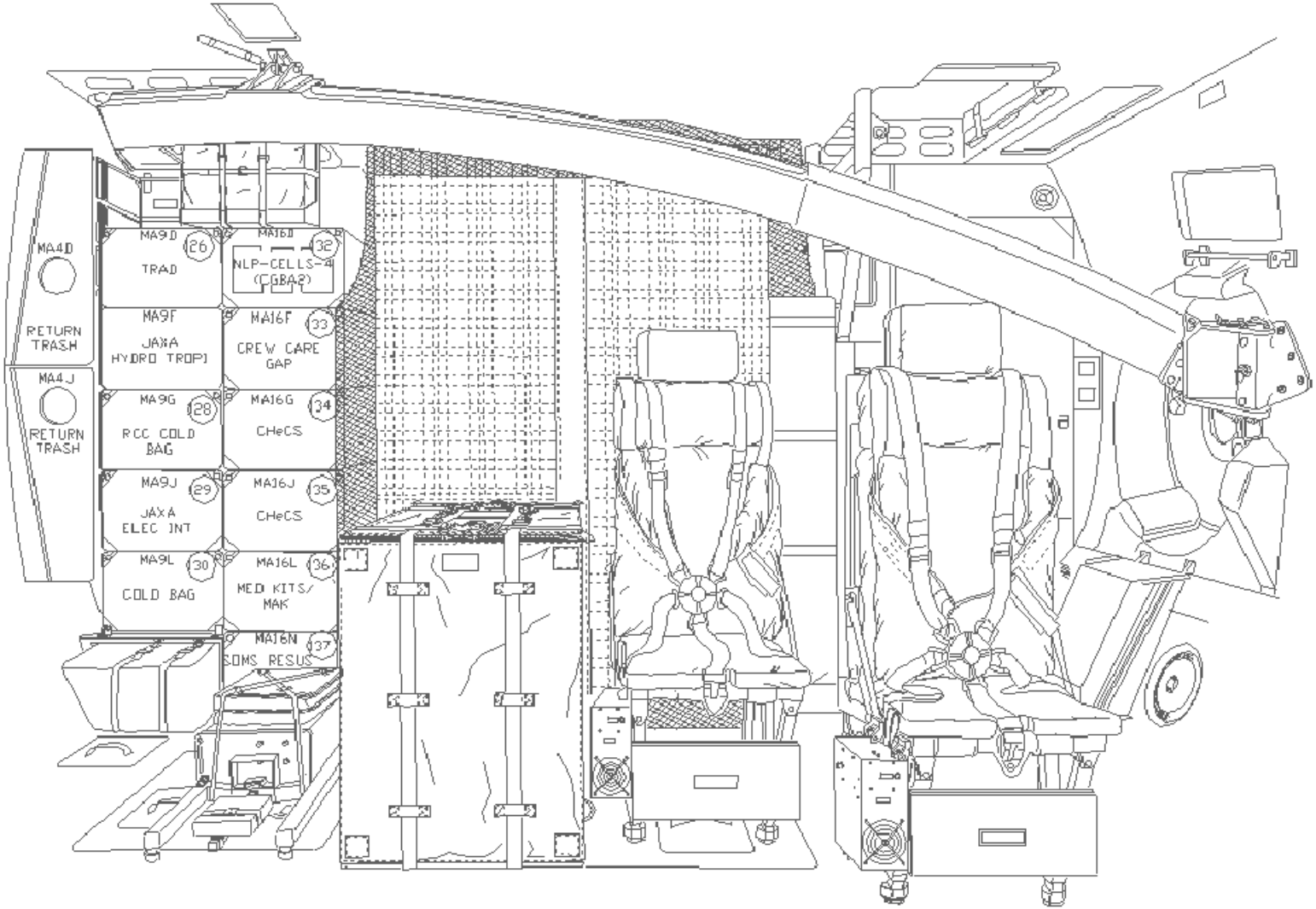

PACKING INSTRUCTIONS FOR EDV IN SEAT 7 BAG

Items you will need:

Bubble wrap, Hefty trash bag and general purpose (grey tape)

1. EDV configuration prior to stowage
   1.1. Cover lid protrusions with bubble wrap and secure with grey tape

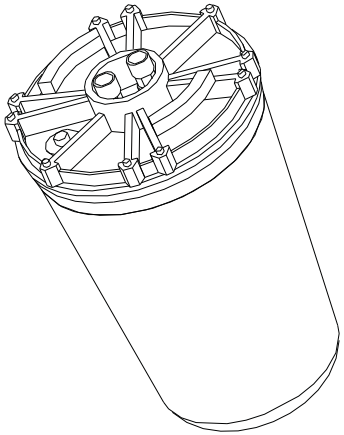

   1.2. Place EDV into Hefty trash bag
   1.3. Close Hefty trash bag by tying a knot in the gathered end
   1.4. Cover knot with grey tape

Continues on next page...

PACKING INSTRUCTIONS FOR EDV IN SEAT 7 BAG (CONT.)

2. Seat 7 bag configuration prior to stowing the EDV
   2.1. Place square piece of foam on the bottom of the bag
   2.2. Place foam piece labeled FWD in the FWD end of the bag

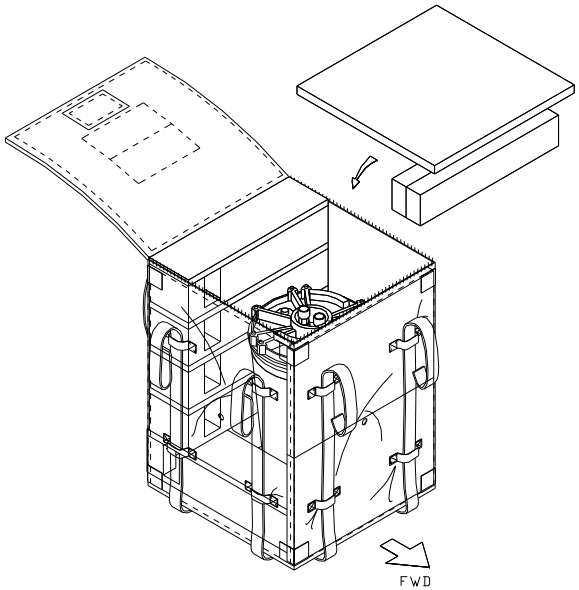

   2.3. Place all PBA foam boxes (Qty. 6) for best fit to center the EDV in the bag
3. EDV Configuration in Seat 7 bag
   3.1. Place EDV in center of bag in orientation shown above
   3.2. Place square and remaining pieces of foam on top
   3.3. Close the bag and report completion to MCC

RSAD (**preview**)

- Bring up RSAD before you bring up DOUG
    - If joint angles don't match Data> Joint arm bias (ARM ID)> Arm 301
- Data> data source> unclick enable multicast> okay (to disable multicast)

DOUG (**preview**)

- If the targets were uplinked while DOUG was up and running, reboot the machine.
- Click on Shuttle DOUG> RMS data from RSAD
    - Joint angles won't match RSAD because multicast is disabled
- File> load state> STS132_EVA_OBSS_Cable_Repair State File
- Reconfig> Orbiter Inspection> OBSS_GF1_to_SRMS (to attach boom)
- Shift V for proximity display.
- Options> RMS targets> put a check in the RMS box.
- Click on the first target, which is the Battery R&R Viewing position
- Press the Home key repeatedly until the green box in the lower left corner says "RMS targets selected".
    - this allows you to use the Page up and Page down keys to cycle through targets in sequence.

Shaded gray actions may not be needed if already saved in the DOUG state file.

RSAD (**for ops**)

- Data> date source> highlight telemetry server and click enable multicast> okay

DOUG (**for ops**)

- Display> show RMS target (to get the pink target arm)
- Options> RMS targets> click target RMS
    - use either the dialog box or the Page up/Page down keys to move the pink target to the next position (these targets aren't in RSAD so they must be updated manually in DOUG).

EVA OBSS CABLE REPAIR

1. SETUP

Verify SSRMS at EVA2 Start posn:

	SR	SY	SP	EP	WP	WY	WR
√	+77.0	0.0	-39.0	-55.0	+30.0	-31.0	+69.0

Verify SPDM on MBS PDGF 2 at Stow Config posn:

	SR	SY	SP	EP	WP	WY	WR
√Arm 1:	+85.0	-110.0	-120.0	+80.0	-50.0	-80.0	-50.0
√Arm 2:	-95.0	-45.0	-120.0	-20.0	+30.0	-120.0	-22.0
√Body:	+60.0						

MSS: SSRMS: Thrusters: Thruster Controls for MSS Ops
Verify 'Desat Request:' – Inh
Verify 'Auto Att Control Handover to RS' – Inh

SM 94 PDRS CONTROL
√PL ID, ITEM 3: 2
√INIT ID, ITEM 24: 2

Verify SRMS at BATTERY R&R VIEWING posn:

	X	Y	Z	PITCH	YAW	ROLL	PL ID
√	-998	-949	-321	203	68	242	2
	SY	SP	EP	WP	WY	WR	
√	+30.0	+20.0	-25.0	+5.0	-10.0	+100.0	

R12 √Green Jumper – ISS

V10/L	B
V10/R	Elbow (RSC)
MON 1	A
MON 2	P1 LOOB (MBS Mast)

2. MNVR TO INGRESS CLEAR POSN

NOTE
Minimum clearance between SRMS Upper Boom and JEM is 27 inches. Monitor with Camera A

SM 94 PDRS CONTROL
END POS – ITEM 18 -6 7 3 -8 7 0 -8 4 5 EXEC
ATT – ITEM 21 +1 6 6 +5 4 +3 5 9 EXEC
CMD CK – ITEM 25 EXEC (GOOD)

RHC RATE – COARSE (RATE MIN tb-OFF)
BRAKES – OFF (tb-OFF)
MODE – OPR CMD, ENTER (READY lt on)

AUTO SEQ – PROCEED (IN PROG lt on)

When AUTO SEQ IN PROG lt – off:

INTERMEDIATE posn: (04:00)

	X	Y	Z	PITCH	YAW	ROLL	PL ID
√	-673	-870	-845	166	54	359	2
	SY	SP	EP	WP	WY	WR	
√	+29.8	+68.4	-50.9	+68.2	-23.5	+100.3	

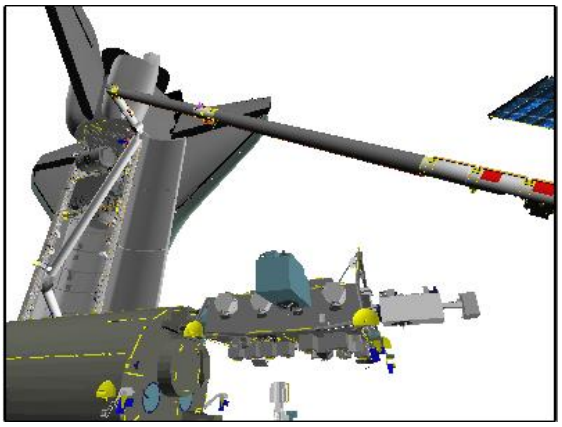

P1 LOOB (160,25)

CCTV A (40,25)

NOTE

Minimum clearance between OBSS and JEM is 61 inches then increases. Monitor with Camera B (Elbow).

Minimum clearance between SRMS Upper Boom and JEM is 27 inches. Monitor with Camera A.

Minimum clearance between OBSS and SPDM Arm 2 is 40 inches. Monitor with P1 LOOB

RHC RATE – VERN (RATE MIN tb-ON)
MODE – SINGLE, ENTER

Mnvr to INGRESS CLEAR posn:

	SY	SP	EP	WP	WY	WR	
Intermediate	+29.8	+68.4	-50.9	+68.2	-23.5	+100.3	
1: SY +	+39.5						
2: WR –						+71.2	
Ingress Clear	+39.5	+68.4	-50.9	+68.2	-23.5	+71.2	
	X	Y	Z	PITCH	YAW	ROLL	PL ID
	-434	-607	-908	163	16	357	2

BRAKES – ON (tb-ON)

Notify EV, GO for APFR Ingress

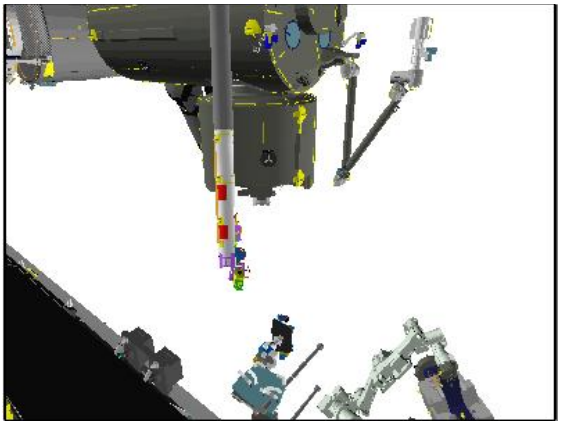

P1 LOOB (140,-25)

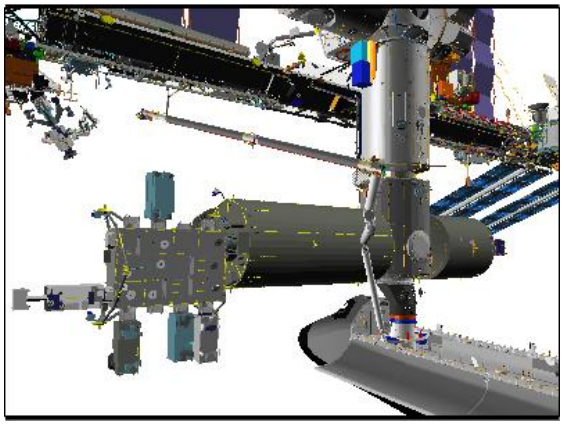

Bird's Eye

3. <u>MNVR TO OBSS REPAIR POSN</u>
   On EV GO, ready for OBSS repair:

RHC √RATE – VERN (RATE MIN tb-ON)
BRAKES – OFF (tb-OFF)
MODE – SINGLE, ENTER

Mnvr per EV GCA to OBSS REPAIR posn:

	SY	SP	EP	WP	WY	WR	
Ingress Clear	+39.5	+68.4	-50.9	+68.2	-23.5	+71.2	
1: WR +						+76.2	
OBSS Repair	+39.5	+68.4	-50.9	+68.2	-23.5	+76.2	
	X	Y	Z	PITCH	YAW	ROLL	PL ID
	-449	-656	-900	163	21	357	2

BRAKES – ON (tb-ON)

If additional EV GCA required,

<u>NOTE</u>
SJ WR + (-) is the most efficient way to move OBSS toward (away) from EV chest

BRAKES – OFF (tb-OFF)
MODE – as desired

ORB LD mode (for translations):

OBSS to BODY Direction	Expected Input
In toward EV chest (out)	THC Right (Left)
To EV Left (Right)	THC Push (Pull)
Up(Down)	THC Down (Up)

PL mode (for rotation):

OBSS to BODY Direction	Expected Input
Roll toward EV (away)	RHC Roll Right (Left)

When EV GCA complete:
BRAKES – ON (tb-ON)

Expected OBSS REPAIR posn:

X	Y	Z	PITCH	YAW	ROLL	PL ID
-449	-656	-900	163	21	357	2
SY	SP	EP	WP	WY	WR	
+39.5	+68.4	-50.9	+68.2	-23.5	+76.2	

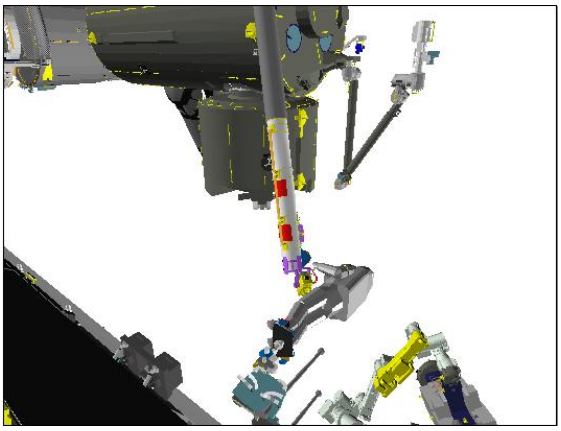

P1 LOOB (140,-25)

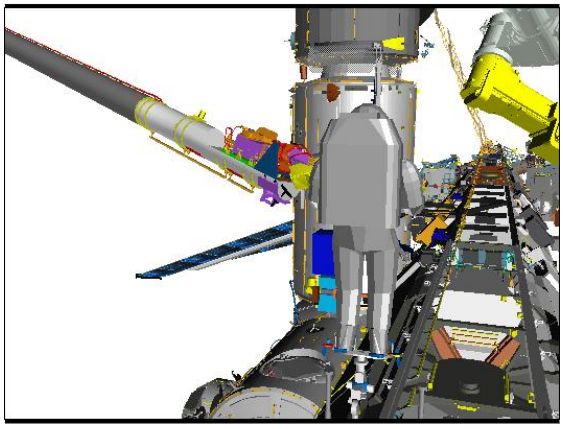

MBS Mast (165,-8)

4. <u>MNVR TO EGRESS CLEAR POSN</u>
On EV GO, When repair complete and ready for ITVC test:

RHC √RATE – VERN (RATE MIN tb-ON)
BRAKES – OFF (tb-OFF)
MODE – SINGLE, ENTER

Mnvr to EGRESS CLEAR posn:

	SY	SP	EP	WP	WY	WR	
OBSS Repair	+39.5	+68.4	-50.9	+68.2	-23.5	+76.2	
1: WR -						+71.2	
Egress Clear	+39.5	+68.4	-50.9	+68.2	-23.5	+71.2	
	X	Y	Z	PITCH	YAW	ROLL	PL ID
	-434	-607	-908	163	16	357	2

BRAKES – ON (tb-ON)

R12 √Green Jumper – LDRI/ITVC
R12 (OBSS) ITVC ENA - ON
A7 VID OUT DNLNK pb - push
IN PL2(VPU) pb - push

LT LEVEL pb - push
DAY (NIGHT) pb - push
ALC pb - push
AVG pb - push

MON1(2) √ITVC video displayed

A7 CAMR CMD PAN/TILT - LO RATE
TILT - UP (to hard stop)
PAN - L (to hard stop)
PAN/TILT - RESET

CAMR CMD PAN/TILT - HI RATE
TILT - DN (to hard stop)
PAN - R (to hard stop)

Record Pan/Tilt values and report to MCC:
Pan _____ / Tilt _____

When test complete,
If additional repair necessary: repeat step 3
If no additional repair necessary: Notify EV, GO for APFR Egress

5. MNVR TO BATTERY R&R VIEWING
On EV GO, EV Egress complete:

R12 Green Jumper – ISS

V10/L	B
V10/R	Elbow (RSC)
MON 1	A
MON 2	P1 LOOB (P1 LOIB)

Verify EGRESS CLEAR posn within 5”/1°:

	X	Y	Z	PITCH	YAW	ROLL	PL ID
√	-434	-607	-908	163	16	357	2
	SY	SP	EP	WP	WY	WR	
√	+39.5	+68.4	-50.9	+68.2	-23.5	+71.2	

If not at EGRESS CLEAR posn:
SM 94 PDRS CONTROL
END POS – ITEM 18 -4 3 4 -6 0 7 -9 0 8 EXEC
ATT – ITEM 21 +1 6 3 +1 6 +3 5 7 EXEC
CMD CK – ITEM 25 EXEC (GOOD)

BRAKES – OFF (tb-OFF)
MODE – OPR CMD, ENTER (READY lt on)

AUTO SEQ – PROCEED (IN PROG lt on)

When AUTO SEQ IN PROG lt – off:

EGRESS CLEAR posn:

	X	Y	Z	PITCH	YAW	ROLL	PL ID
√	-434	-607	-908	163	16	357	2
	SY	SP	EP	WP	WY	WR	
√	+39.5	+68.4	-50.9	+68.2	-23.5	+71.2	

NOTE

Minimum clearance between OBSS and JEM is 61 inches then increases. Monitor with Camera B (Elbow).

Minimum clearance between SRMS Upper Boom and JEM is 27 inches. Monitor with Camera A.

Minimum clearance between OBSS and SPDM Arm 2 is 40 inches. Monitor with P1 LOOB

MODE – SINGLE, ENTER

Mnvr to INTERMEDIATE posn:

	SY	SP	EP	WP	WY	WR	
Egress Clear	+39.5	+68.4	-50.9	+68.2	-23.5	+71.2	
1: WR +						+100.3	
2: SY –	+29.8						
Intermediate	+29.8	+68.4	-50.9	+68.2	-23.5	+100.3	
	X	Y	Z	PITCH	YAW	ROLL	PL ID
	-673	-870	-845	166	54	359	2

NOTE

Minimum clearance between SRMS Upper Boom and JEM is 27 inches. Monitor with Camera A

SM 94 PDRS CONTROL

END POS – ITEM 18 -9 9 8 -9 4 9 -3 2 1 EXEC
ATT – ITEM 21 +2 0 3 +6 8 +2 4 2 EXEC
CMD CK – ITEM 25 EXEC (GOOD)

RHC

RATE – COARSE (RATE MIN tb-OFF)
MODE – OPR CMD, ENTER (READY lt on)

AUTO SEQ – PROCEED (IN PROG lt on)

When AUTO SEQ IN PROG lt – off:
BRAKES – ON (tb-ON)

BATTERY R&R VIEWING posn: (04:00)

	X	Y	Z	PITCH	YAW	ROLL	PL ID
√	-998	-949	-321	203	68	242	2
	SY	SP	EP	WP	WY	WR	
√	+30.0	+20.0	-25.0	+5.0	-10.0	+100.0	

PARAM – PORT TEMP
JOINT – CRIT TEMP

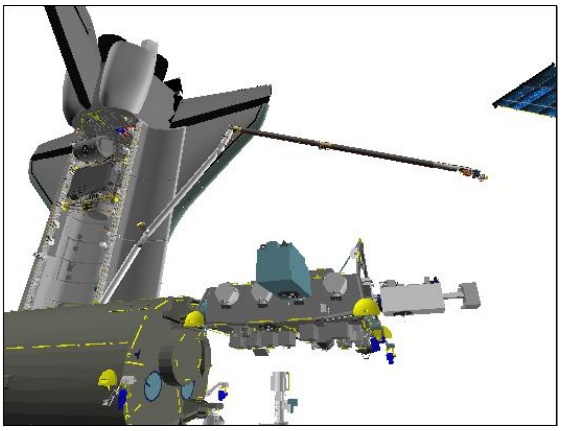

P1 LOOB (160,25)

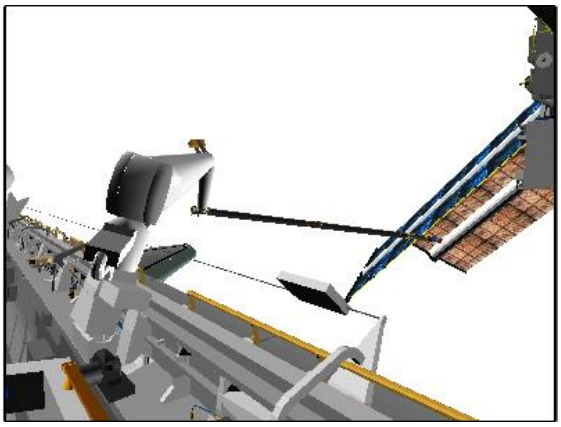

CCTV A (40,-5)

6. <u>CONFIGURE ITVC FOR BATTERY R&R VIEWING SUPPORT</u>

R12 Green Jumper – LDRI/ITVC

A7 Configure camera as shown for Battery R&R viewing support

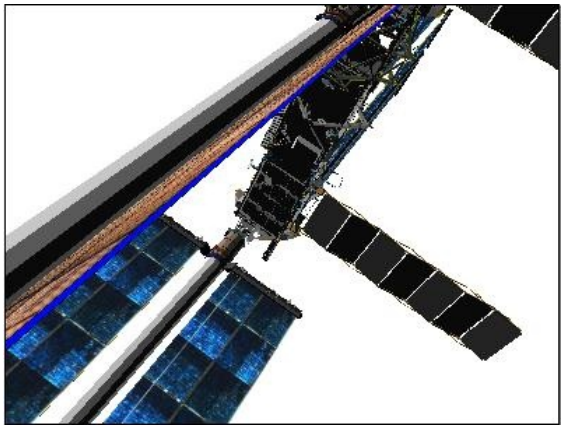

ITVC (145,-130)

CAUTION:

A. Avoid inadvertent contact with
   1. S0 aft face radiator
   2. Heat pipe radiators [Z1]
   3. PCU cathode and HCA ports [Z1]
   4. Ku-Band antenna (SGANT) dish [Z1]
   5. CMG cover/shells [Z1]
   6. SASA high and low gain antennas and radiator surfaces [Z1]

B. For structural reasons
   1. Avoid kicking S1/P1 radiator beam.
      If any of these occur, wait 2 to 5 min to allow structural response to dissipate

C. Other
   1. Lubricant from Ku-Band SGANT gimbals [Z1] can contaminate EMU

LOCATION DEPENDENT INHIBIT

Z1 (Prior to SGANT-2 Rework)

1. √Verify RPCM Z1-4B-B RPC 02 – Open – Close Cmd Inhibit – power
2. √Verify RPCM Z1-3B-B RPC 02 – Open – Close Cmd Inhibit heater
3. √Verify RPCM Z1-4B-B RPC 03 – Open – Close Cmd Inhibit power
4. √Verify RPCM Z1-3B-B RPC 03 – Open – Close Cmd Inhibit heater

IV	EV
1. Verify SGANT inhibits 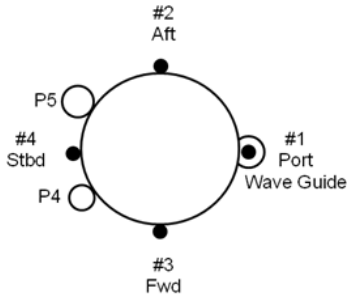 	SGANT SECURING (00:25) 1. Translate to A/L 2. Open hatch thermal cover __:__ 3. Retrieve ERAD w/ 2" ext from A/L staging bag (fish stringer #2, hook #1) 4. Retrieve sm ORU bag 5. Close hatch thermal cover __:__ CAUTION Avoid inadvertent contact with S0 aft face radiator CAUTION Avoid inadvertent contact with mated electrical connectors 6. Translate to Z1 zenith 7. Temp-stow sm ORU bag on Z1 HR 6052 8. Translate zenith of SGANT Boom 9. RET and remove AGIT heat shield, temp stow near worksite 10. Loosen AETs used for dish tie-down 11. Socket swap to ERAD on PGT ☐ pull test 12. **PGT [B2 (16.0), CW2] - ERAD 2-in ext-7/16** Drive bolts to torque in following order, report any turns: ☐ Bolt 1: Torque: _____ Turns: _____ ☐ Bolt 4: Torque: _____ Turns: _____ ☐ Bolt 2: Torque: _____ Turns: _____ ☐ Bolt 3: Torque: _____ Turns: _____ 13. Perform wiggle test on SGANT Dish ☐ If motion: go to step 14 ☐ If no motion: perform GIMBAL LOCK REMOVAL (step 18) 14. **PGT [B2 (16.0), CCW2] - ERAD 2-in ext-7/16** Release bolts, 2 turns, in any order: ☐ Bolt 1 ☐ Bolt 2 ☐ Bolt 3 ☐ Bolt 4

IV	EV
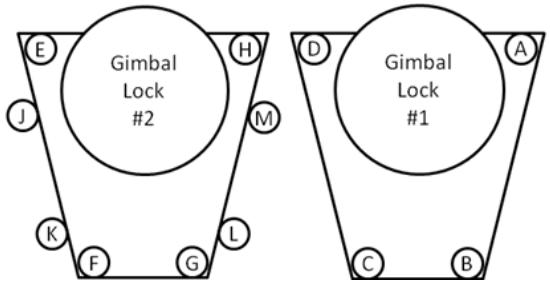	15. Twist/realign SGANT Dish to relieve any binding ☐ Verify alignment pins are properly seated 16. **PGT [B2 (16.0), CW2] - ERAD 2-in ext-7/16** Drive bolts to torque in following order: ☐ Bolt 1: Torque: _____ Turns: _____ ☐ Bolt 4: Torque: _____ Turns: _____ ☐ Bolt 2: Torque: _____ Turns: _____ ☐ Bolt 3: Torque: _____ Turns: _____ 17. Perform wiggle test on SGANT Dish ☐ If motion: repeat step 16 ☐ If no motion: continue to step 18 ☐ If second wiggle test and observe motion: continue to step 18 18. Report if gap between SGANT Boom and Dish is noticed <u>GIMBAL LOCK REMOVAL</u> (00:15) 19. Stow ERAD in sm ORU bag using MWS RET 20. Install 6-in ext on PGT ☐ pull test 21. Attach RET to Gimbal Lock #2 22. **PGT[B1 (12.0), CCW2] – 6-in ext-7/16, 7-8 turns:** Release Gimbal Lock #2 bolts (8); release by diagonal opposites 23. Stow Gimbal Lock #2 in sm ORU bag 24. Attach RET to Gimbal Lock #1 25. **PGT[B1 (12.0), CCW2] – 6-in ext-7/16, 7-8 turns:** Release Gimbal Lock #1 bolts (4); release by diagonal opposites 26. Stow Gimbal Lock #1 in sm ORU bag 27. WVS survey

IV	EV
Sm ORU Bag ☐ RET sm-sm ☐ Gimbal Lock #1 ☐ RET sm-sm ☐ Gimbal Lock #2 ☐ RET sm-sm ☐ ERAD w/ 2” ext	SGANT CLEANUP (00:05) 28. If dish properly secured: a. Retrieve and stow AETs used for dish tie-down b. Reinstall heat shield, verify: ☐ Teflon tabs tucked in ☐ 1/4-turn fasteners and Velcro secure ☐ Snug fit around edges and pockets ☐ Strap under wave guide bolt If dish not secured: a. Re-tighten AETs securing SGANT dish b. Reinstall heat shield, verify: ☐ Teflon tabs tucked in ☐ 1/4-turn fasteners and Velcro secure ☐ Snug fit around edges and pockets ☐ Strap under wave guide bolt c. WVS survey of tie-down d. Take photos of tie-down (if time permits) 29. Cleanup sm ORU bag and perform bag inventory 30. Glove check