STS-131/19A

FD 10 Execute Package

MSG	Page(s)	Title
075A	1 - 15	FD10 Flight Plan Revision
076	16 - 17	FD10 Mission Summary
077	18 - 20	FD10 Transfer Message
078	21	FD10 Crew Choice Downlink
079	22	FD10 EVA Deltas
080	23 - 24	Big Picture for Myco Experiment during 19A
081	25 - 39	19A EVA Restow and ULF4 Tool Config
082A	40	CBM Center Disk Cover Locate
083	---	FD10 PAO Event Summary Message: Eastern Guilford High School
084	---	FD10 PAO Event Summary Message: Joint Crew News Conference
085A	41 - 46	5MLE Bag Layout Updates

Approved by FAO:
L. Rush

Last Updated: Apr 14 2010 3:20 AM GMT
JEDI *(**J**oint **E**xecute package **D**evelopment and **I**ntegration), v3.0*

Comedy is on the inside cover.

O3 FD suggests new hairstyle for O1 FD.

MSG INDEX

MSG NO.	TITLE
MSG-075	FD10 Flight Plan Revision
MSG-076	FD10 Mission Summary
MSG-077	FD10 Transfer Message
MSG-078	FD10 Crew Choice Downlink
MSG-079	FD 10 EVA Deltas
MSG-080	Big Picture for Myco Experiment during 19A
MSG-081	19A EVA Restow and ULF4 Tool Config
MSG-082A	CBM Center Disk Cover Locate
MSG-083	FD10 PAO Event Summary Message: Eastern Guilford High School
MSG-084	FD10 PAO Event Summary Message: Joint Crew News Conference
MSG-085A	5MLE Bag Layout Updates

1. Post-Sleep Cryo Config

For today's post-sleep cryo config, O2 and H2 tanks 1 and 5 will be active.

R1 O2,H2 MANF VLV TK1 (two) - OP (tb-OP)

Pre-Sleep Cryo Config

√MCC for deltas prior to configuring for pre-sleep.

For tonight's pre-sleep cryo config, manifold 2 will be closed with O2 tanks 2, 3 and 4, and H2 tanks 2 and 5 active.

R1 O2 TK1 HTR A - OFF
TK2 HTR A - AUTO
TK3 HTR A - AUTO
H2 TK1 HTRS A,B (two) - OFF
TK2 HTRS A,B (two) - AUTO
O2, H2 MANF VLV TK2 (two) - CL (tb-CL)

A11 CRYO TK4 HTR O2 A - AUTO

A15 CRYO TK5 HTR O2 A - OFF

2. Comm Loop Overview for Flight Day 10:

S/G 1 & A/G 1	S/G 2	A/G 2
Node 2 CBM CPA Ops	PAO Event	Transfer
O2 Transfer Setup/Init	Educational Event	All other STS Comm
	Russian Ops	
	ISS Payloads	
	DPC	
	ISS Crew PFCs	
	All other ISS Comm	

3. STS-131/19A FD9 - MMT Summary
   The MMT met very briefly today to review orbiter systems and mission progress.

   Kudos on completion of all three EVAs and the great teamwork to overcome the various challenges.

   Discovery continues to perform very well. The engineering team has no concerns with the MMOD hit (< 1mm) on the window 1 thermal pane. The bounding analysis performed on previous flights indicates anything less than 12mm in diameter (.49 inches) is not a concern for the windows.

   Enjoy your well deserved “OFF DUTY” Part II.

4. CDR PFC
   Dex, due to ratty Shuttle comm at the time of your PFC, we have moved your PFC to an SSC in the ISS. Please tag up with one of the ISS Crew to configure the SSC and S/G 2 audio. Please inform MCC which SSC you will be using.

5. WHC/WCS Configuration & Management
   We have evaluated the waste generation data and have confirmed that you can return to the preflight agreement of 4 Shuttle crew on the WHC and 3 Shuttle crew on the WCS starting this morning. EECOM predicts a Shuttle waste tank quantity of ~88% at the start of the FD13 post-undocking waste dump.

6. REPLACE PAGES 2-34, 2-36, 2-38 AND 3-106 THROUGH 3-115.

REPLANNED

FD09

GMT 04/13/10 (103)
β = 6
MET Day 008

17 18 19 20 21 22 23 04/14 01 02 03 04
06 07 08 09 10 11 12 13 14 15 16 17 18

FD10

STS-131

CDR POINDEXTER	PRE SLEEP; PMC A/G; PRE SLEEP	SLEEP	POST SLEEP
PLT DUTTON	PRE SLEEP	SLEEP	POST SLEEP
MS1 MASTRACCHIO	PRE SLEEP	SLEEP	ASPRN; POST SLEEP
MS2 METCALF-LINDENBURGER	PRE SLEEP	SLEEP	POST SLEEP
MS3 WILSON	PRE SLEEP	SLEEP	LOG; POST SLEEP
MS4 YAMAZAKI	PRE SLEEP; XFER SLEEP; TAGUP; PRE SLEEP; XFER BRIEF; PRE SLEEP	SLEEP	LOG; POST SLEEP
MS5 ANDERSON	PRE SLEEP	SLEEP	ASPRN; LOG; POST SLEEP

TDRS W E Z

DAY/NIGHT

ORBIT 131 132 133 134 135 136 137 138

ORB ATT BIAS -XLV -ZVV

TDRS AVAIL

NOTES

REPLANNED

FD10

GMT 04/14/10 (104)
β = 8
MET Day 008

18 19 20 21 22 23 009/00 01 02 03 04 05 06
05 06 07 08 09 10 11 12 13 14 15 16

STS-131

CDR POINDEXTER	POST SLEEP	N2-I	POST SLEEP	PWR #1 FILL	CWC #5	INIT	IMU	CTCM	PWR	XFER	CWC	XFER	N2-T	MEAL	CREW	PHOTO	CREW CONF	OFF DUTY	EXERCISE	OFF DUTY	PFC OCA	OFF DUTY		
PLT DUTTON	POST SLEEP	PTV08	S/U	P/TV08 EXT SRVY	PTV08	WCS^	MPLM XFER							MEAL	CREW	PHOTO	CREW CONF	OFF DUTY			PFC OCA	OFF DUTY		EXER CISE
MS1 MASTRACCHIO	POST SLEEP			MPLM XFER				PGT C/O	EVA TOOL RESTOW					MEAL	CREW	PHOTO	CREW CONF	OFF DUTY		EXERCISE	OFF DUTY			
MS2 METCALF-LINDENBURGER	POST SLEEP		MCIU	MPLM XFER										MEAL	CREW	PHOTO	CREW CONF	OFF DUTY			EXERCISE	OFF DUTY		
MS3 WILSON	POST SLEEP	XFER	UPDAT	MPLM XFER			MPLM PIVOT REMOVE				MPLM RACK CONFIG			MEAL	CREW	PHOTO	CREW CONF	OFF DUTY				EXERCISE	OFF DUTY	
MS4 YAMAZAKI	POST SLEEP		MDK	MPLM XFER						NSXFER	MPLM RACK CONFIG			MEAL	CREW	PHOTO	CREW CONF	OFF DUTY		PFC OCA	OFF DUTY		EXER-CISE	
MS5 ANDERSON	POST SLEEP		CDC	LOCATE	MPLM XFER		N2N-CBM-CPA-INSTALL							MEAL	CREW	PHOTO	CREW CONF	OFF DUTY		PFC OCA	OFF DUTY		EXERCISE	OFF DUTY

TDRS W E Z

DAY/NIGHT

ORBIT 139 140 141 142 143 144 145 146

ORB ATT BIAS -XLV -ZVV

TDRS AVAIL

^COMPACT

NOTES

REPLANNED

FD10

GMT 04/14/10 (104)
β = 11
MET Day 009

06 17 18 19 20 21 22 23 04/15 01 02 03 04
07 08 09 10 11 12 13 14 15 16 17 18

STS-131

CDR POINDEXTER	OFF DUTY	PAO EDU	EVENT	PRE SLEEP				PMC A/G	PRE SLEEP									SLEEP
PLT DUTTON	EXER CISE	XFER	TAG UP	MYCO*	PRE SLEEP													SLEEP
MS1 MASTRACCHIO	OFF DUTY			MYCO*	PRE SLEEP	PFC OCA	PRE SLEEP											SLEEP
MS2 METCALF-LINDENBURGER	OFF DUTY	PAO EDU	EVENT	PRE SLEEP						PFC OCA	PRE SLEEP							SLEEP
MS3 WILSON	OFF DUTY	PAO EDU	EVENT	MDK	AEM#	PRE SLEEP		PFC OCA	PRE SLEEP									SLEEP
MS4 YAMAZAKI	EXER CISE-	OFF DUTY	XFER	TAG UP	MYCO*	PRE SLEEP	XFER BRIEF	PRE SLEEP										SLEEP
MS5 ANDERSON	OFF DUTY	PAO EDU	EVENT	PRE SLEEP														SLEEP

TDRS W E Z

DAY/NIGHT

ORBIT 147 148 149 150 151 152 153 154

ORB ATT BIAS -XLV -ZVV

TDRS AVAIL

NOTES
*REVIEW
#STATUS CHECK

STS-131/19A FD10

REPLANNED

GMT Date 04/14 (104) | W | TDRS E | Z | DON/B | ORB | MET Day 008 | STS ATI

16:00 17:00 18:00 19:00 20:00

03:00 04:00 05:00 06:00

137 138 139 140

BIAS-XLV-ZVV

CDR POINDEXTER	PLT DUTTON	MS2 METCALF-LINDENBURGER	NOTES
SLEEP	SLEEP	SLEEP	
POST-SLEEP ACTIVITY (ORB OPS, CREW SYS)	POST-SLEEP ACTIVITY (ORB OPS, CREW SYS)	POST-SLEEP ACTIVITY (ORB OPS, CREW SYS)	
N2 REPRESS INIT [A]	P/TV08 EXTERNAL SURVEY (P/TV, SCENES) SETUP, Step 2		
POST-SLEEP ACTIVITY (ORB OPS, CREW SYS)			
	P/TV08 EXTERNAL SURVEY (P/TV, SCENES) OPS, Item 2 for ISS Survey	L17 Check MCIU filter screen	

FD10 EZ ACTIVITIES:
TEPC (ORB OPS, CREW SYSTEMS)
Check Status
Check MDDK Duct Screen
Hard reboot all PGSCs not shut down overnight.

[A] N2 REPRESS USING P/L N2 VLVS (ORB OPS, ECLS) Steps 1,3-7
MCC will TMBU S/W FDA

STS-131/19A FD10

REPLANNED

GMT Date 04/14 (104) | W | T D R S E | Z | D/N | O R B | MET Day 008 | STS ATI

MS1 MASTRACCHIO | MS3 WILSON | MS4 YAMAZAKI | MS5 ANDERSON | NOTES

16:00 — 17:00 — 18:00 — 19:00 — 20:00 — 03:00 — 04:00 — 05:00 — 06:00

137 — 138 — 139 — 140

BIAS-XLV-ZVV

SLEEP

EVA CREW: TAKE 1 ASPIRIN (325mg)
POST-SLEEP ACTIVITY
(ORB OPS, CREW SYS)

SLEEP LOGBOOK (SDBI 1634)
POST-SLEEP ACTIVITY
(ORB OPS, CREW SYS)

DAILY TRANSFER LIST UPDATE
Ref. Transfer Lists & MSG 077

SLEEP LOGBOOK (SDBI 1634)
POST-SLEEP ACTIVITY
(ORB OPS, CREW SYS)

EVA CREW: TAKE 1 ASPIRIN (325mg)
SLEEP LOGBOOK (SDBI 1634)
POST-SLEEP ACTIVITY
(ORB OPS, CREW SYS)

STS-131/19A FD10

REPLANNED

GMT Date 04/14 (104) | W E Z | DON ORB | MET Day 008 | STS ATI

CDR POINDEXTER

20:00
POST-SLEEP ACTIVITY (ORB OPS, CREW SYS)
PWR FILL
(ORB OPS, ECLS)
Init Fill #1 (S/N 1005)
Fill duration ~ 30 min
Ref. MSG 012

07:00
SHUTTLE/ISS H2O CONTAINER FILL (HC)
(ORB OPS, ECLS)
Perform CWC FILL #5, Ref. MSG 012

21:00
IMU STAR OF OPPTY ALIGN (ORB OPS, GNC)

08:00
BIAS -XLV -ZVV
SHUTTLE/ISS H2O CONTAINER FILL (HC)
(ORB OPS, ECLS)
Perform FILL TERMINATION

22:00
PWR TRANSFER
Transfer 1 PWR to ISS

CWC TRANSFER
Transfer 1 CWC to ISS

09:00
N2 REPRESS TERM (On MCC GO) [B]

23:00
[B] N2 REPRESS USING P/L N2 VLVS
(ORB OPS, ECLS)
on MCC go, perform steps 8-13
MCC will TMBU S/W FDA

10:00
00:00

MEAL

PLT DUTTON

P/TV08 EXTERNAL SURVEY
(P/TV, SCENES)
OPS, Item 2 for ISS Survey

P/TV08 EXTERNAL SURVEY (DEACTIVATION)
(P/TV, SCENES)

WCS COMPACTOR OPS (DUAL-VANE)
(Cue Card, URINE COLLECTION)

TRANSFER OPS
Ref. MPLM Transfer Lists
and MSG 077

MEAL

MS2 METCALF-LINDENBURGER

TRANSFER OPS
Ref. MPLM Transfer Lists
and MSG 077

MEAL

NOTES

STS-131/19A FD10

REPLANNED

GMT Date 04/14 (104) | W E Z T D R S | D/N O R B | MET Day 008 | STS ATI

MS1 MASTRACCHIO | MS3 WILSON | MS4 YAMAZAKI | MS5 ANDERSON | NOTES

140

141

142

BIAS-XLV-ZVV

20:00

21:00

22:00

23:00

00:00

07:00

08:00

09:00

10:00

MS1 MASTRACCHIO

TRANSFER OPS
Ref. MPLM Transfer Lists
and MSG 077

PGT C/O (EVA, TOOLS AND STOWAGE)
Checkout PGT s/n 1004
Ref. Transfer Lists: MPLM Resupply
item 187 & Middeck Return Item 707

EVA TOOL RESTOW
Ref. MSG 079
Ref. MSG 081

MEAL

MS3 WILSON

TRANSFER OPS
Ref. MPLM Transfer Lists
and MSG 077

S&M: 1.262 RSP/RSR ROTATE UP
Steps 1-4
Ref. MPLM Return Transfer
List: Item 824

S&M: 1.260 CONFIGURE MPLM
RACKS FOR ENTRY

MEAL

MS4 YAMAZAKI

MERLIN STATUS CK (Cue Card)
GLACIER STATUS CK (Cue Card)
STL STATUS CK (Cue Card)

TRANSFER OPS
Ref. MPLM Transfer Lists
and MSG 077

TRANSFER OPS
Transfer Nanoskelton samples
Ref. Middeck Transfer List:
Return Item 431.1

S&M: 1.260 CONFIGURE MPLM
RACKS FOR ENTRY

MEAL

MS5 ANDERSON

CBM CENTER DISK COVER
LOCATE
Ref. MSG 082

TRANSFER OPS
Ref. MPLM Transfer Lists
and MSG 077

S&M: 1.100 CBM CONTROLLER PANEL
ASSEMBLY INSTALLATION - GENERIC

MEAL

STS-131/19A FD10

REPLANNED

GMT Date 04/14 (104) | W | TDRS E | Z | DON/DOFF | MET Day 009 | STS ATT

CDR POINDEXTER	PLT DUTTON	MS2 METCALF-LINDENBURGER	NOTES
MEAL	MEAL	MEAL	
CREW PHOTO	CREW PHOTO	CREW PHOTO	
CREW CONFERENCE ISS KU AVAIL (01:06-01:47) Ref. MSG 084	CREW CONFERENCE ISS KU AVAIL (01:06-01:47) Ref. MSG 084	CREW CONFERENCE ISS KU AVAIL (01:06-01:47) Ref. MSG 084	
OFF DUTY	OFF DUTY	OFF DUTY	
EXERCISE			
OFF DUTY		EXERCISE	

Time axis: 00:00, 01:00, 02:00, 03:00, 04:00; 11:00, 12:00, 13:00, 14:00

DON/DOFF: 143, 144, 145

STS ATT: BIAS-XLV-ZVV

STS-131/19A FD10

REPLANNED

GMT Date 04/14 (104) | W | T D R S E | Z | D/N | O R B | MET Day 009 | STS ATI

MS1 MASTRACCHIO | MS3 WILSON | MS4 YAMAZAKI | MS5 ANDERSON | NOTES

MET	MS1 MASTRACCHIO	MS3 WILSON	MS4 YAMAZAKI	MS5 ANDERSON
00:00	MEAL	MEAL	MEAL	MEAL
	CREW PHOTO	CREW PHOTO	CREW PHOTO	CREW PHOTO
01:00	CREW CONFERENCE ISS KU AVAIL (01:06-01:47) Ref. MSG 084	CREW CONFERENCE ISS KU AVAIL (01:06-01:47) Ref. MSG 084	CREW CONFERENCE ISS KU AVAIL (01:06-01:47) Ref. MSG 084	CREW CONFERENCE ISS KU AVAIL (01:06-01:47) Ref. MSG 084
02:00	OFF DUTY	OFF DUTY	OFF DUTY	OFF DUTY
03:00	EXERCISE	OFF DUTY	L9 PS ATU A/G (two) - OFF NETMEETING VIDEO CONFERENCING (ORB OPS, PGSC) Private Family Conference ISS KU AVAIL (02:37-03:23) C OFF DUTY	L9 PS ATU A/G (two) - OFF NETMEETING VIDEO CONFERENCING (ORB OPS, PGSC) Private Family Conference ISS KU AVAIL (02:37-03:23) C OFF DUTY
04:00				

C Omit Steps 1.2 & 3
Use A/G 2 for Audio
Inform MCC of which PGSC
will be used

BIAS-XLV-ZVV

143 144 145

11:00 12:00 13:00 14:00

STS-131/19A FD10

REPLANNED

GMT Date 04/14 (104) | W | TDRS E | Z | DON/B | MET Day 009 | STS ATI

CDR POINDEXTER | **PLT** DUTTON | **MS2** METCALF-LINDENBURGER | NOTES

04:00 — 05:00 — 06:00 — 07:00 — 08:00 — 15:00 — 16:00 — 17:00 — 18:00

145 — 146 — 147 — 148

BIAS-XLV-ZVV

CDR

OFF DUTY

OFF DUTY

PUBLIC AFFAIRS EVENT
ISS KU AVAIL (06:27-07:12)
Ref. MSG 083

PRE-SLEEP ACTIVITY
(ORB OPS, CREW SYS)

PLT

OFF DUTY

L9 PS ATU A/G (two) - OFF
NETMEETING VIDEO CONFERENCING (ORB OPS, PGSC)
Private Family Conference
ISS KU TDRW (04:12-04:56) C
Ratty S-BD until 04:17

C Omit Steps 1.2 & 3
Use A/G 2 for Audio
Inform MCC of which PGSC will be used

PRIVATE FAMILY CONFERENCE
Ref. MSG 075, item 4
ISS KU AVAIL (05:02-05:17)

OFF DUTY

EXERCISE

TRANSFER TAGUP
Coordinate with transfer counterparts

MYCO BODY SAMPLE COLLECTION
(ASSY OPS, P/L) Rvw Proc & Ref. MSG 080

PRE-SLEEP ACTIVITY
(ORB OPS, CREW SYS)

MS2

EXERCISE

OFF DUTY

PUBLIC AFFAIRS EVENT
ISS KU AVAIL (06:27-07:12)
Ref. MSG 083

PRE-SLEEP ACTIVITY
(ORB OPS, CREW SYS)

STS-131/19A FD10

REPLANNED

GMT Date 04/14 (104) | W | TDRS E | Z | DON | ORB | MET Day 009 | STS ATI

MS1 MASTRACCHIO

04:00 EXERCISE

05:00 OFF DUTY

06:00 OFF DUTY

07:00 MYCO BODY SAMPLE COLLECTION (ASSY OPS, P/L) Rvw Proc & Ref. MSG 080

PRE-SLEEP ACTIVITY (ORB OPS, CREW SYS)

L9 PS ATU A/G (two) - OFF

NETMEETING VIDEO CONFERENCING (ORB OPS, PGSC) Private Family Conference ISS KU AVAIL (07:34-08:08) [C]

PRE-SLEEP ACTIVITY (ORB OPS, CREW SYS)

08:00

MS3 WILSON

04:00 OFF DUTY

05:00 EXERCISE

06:00 OFF DUTY

PUBLIC AFFAIRS EVENT ISS KU AVAIL (06:27-07:12) Ref. MSG 083

MERLIN STATUS CK (Cue Card)

GLACIER STATUS CK (Cue Card)

STL STATUS CK (Cue Card)

AEM UNIT#1 CK (Cue Card)

AEM UNIT#2 CK (Cue Card)

PRE-SLEEP ACTIVITY (ORB OPS, CREW SYS)

MS4 YAMAZAKI

05:00 OFF DUTY

06:00 EXERCISE

07:00 OFF DUTY

TRANSFER TAGUP Coordinate with transfer counterparts

MYCO BODY SAMPLE COLLECTION (ASSY OPS, P/L) Rvw Proc & Ref. MSG 080

PRE-SLEEP ACTIVITY (ORB OPS, CREW SYS)

TRANSFER BRIEF Call down status to MCC

MS5 ANDERSON

04:00 OFF DUTY

05:00 EXERCISE

06:00 OFF DUTY

PUBLIC AFFAIRS EVENT ISS KU AVAIL (06:27-07:12) Ref. MSG 083

PRE-SLEEP ACTIVITY (ORB OPS, CREW SYS)

NOTES

[C] Omit Steps 1.2 & 3
Use A/G 2 for Audio
Inform MCC of which PGSC will be used

STS-131/19A FD10

REPLANNED

GMT Date 04/14 (104) | W | T D R S E | Z | D O / R N B | MET Day 009 | STS ATI

CDR POINDEXTER | **PLT** DUTTON | **MS2** METCALF-LINDENBURGER | NOTES

08:00

PRE-SLEEP ACTIVITY (ORB OPS, CREW SYS)

L9 PS ATU A/G (two) - OFF
PRIVATE MEDICAL CONFERENCE VIA A/G 2

PRE-SLEEP ACTIVITY (ORB OPS, CREW SYS)

09:00

10:00

11:00

12:00

19:00

20:00

21:00

22:00

148

149

150

BIAS-XLV-ZVV

SLEEP

PRE-SLEEP ACTIVITY (ORB OPS, CREW SYS)

C Omit Steps 1.2 & 3
Use A/G 2 for Audio
Inform MCC of which PGSC will be used

CREW WAKEUP AT 09/18:00

SLEEP

PRE-SLEEP ACTIVITY (ORB OPS, CREW SYS)

L9 PS ATU A/G (two) - OFF
NETMEETING VIDEO CONFERENCING (ORB OPS,PGSC)
Private Family Conference
ISS KU AVAIL (09:16-09:58) C

PRE-SLEEP ACTIVITY (ORB OPS, CREW SYS)

SLEEP

STS-131/19A FD10

REPLANNED

GMT Date 04/14 (104) | W | TDRS E | Z | DO/RN | ORB | MET Day 009 | STS ATI

MS1 MASTRACCHIO | MS3 WILSON | MS4 YAMAZAKI | MS5 ANDERSON | NOTES

08:00

PRE-SLEEP ACTIVITY (ORB OPS, CREW SYS)

PRE-SLEEP ACTIVITY (ORB OPS, CREW SYS)

L9 PS ATU A/G (two) - OFF

NETMEETING VIDEO CONFERENCING (ORB OPS, PGSC)

Private Family Conference ISS KU TDRE (08:10-08:36) [C]

PRE-SLEEP ACTIVITY (ORB OPS, CREW SYS)

TRANSFER BRIEF

Call down status to MCC

PRE-SLEEP ACTIVITY (ORB OPS, CREW SYS)

PRE-SLEEP ACTIVITY (ORB OPS, CREW SYS)

[C] Omit Steps 1.2 & 3
Use A/G 2 for Audio
Inform MCC of which
PGSC will be used

19:00 — 148

09:00

20:00 — 149

BIAS-XLV-ZVV

CREW WAKEUP AT 09/18:00

10:00

21:00

11:00 — 150

SLEEP | SLEEP | SLEEP | SLEEP

22:00

12:00

Good Morning Discovery,

Congratulations on another great day of robotics, EVA, and transfer activities! Enjoy your well-earned off duty time today!

YOUR CURRENT ORBIT IS: 190 X 182 NM

NOTAMS (ADDED NTU, YHZ, YQX, KBO)

EDW -	EDT 22R/04L IN USE. EDW 22/04 CLOSED FOR CONSTRUCTION.
EDW -	LAKEBED RWYS RED.
NOR -	LAKEBED RWYS GREEN.
NTU -	RWY 23L/05R CLOSED.
FOK -	RWY 06/24 CLOSED.
DOV -	RWY 32 REIL OTS.
FMH -	RWY 23 ALS OTS.
YHZ -	RWY 23/05 CLOSED.
YYT -	TACAN UYT23 AZIMUTH OTS.
YQX -	DME YQX74 OTS.
JTY -	RWY 18 ALS OTS.
MYR -	RWY 18/36 CLOSED FROM 0340 - 0930 GMT.
KKI -	TACAN RIY92 OTS.
MRN -	RWY 20 THRESHOLD DISPLACED. RWY 02/20 LDA = 9085 FT.
KBO -	TACAN GIX18 OTS.
PTN -	RWY 14/32 CLOSED.
IKF -	NOT USABLE. NO AGREEMENT.
BEN -	NOT RECOMMENDED/NOT SUPPORTED.

<u>NEXT 2 PLS OPPORTUNITIES:</u>

EDR22R ORB 145 – 09/04:07	SCT250	7	200/07P11
EDR22R ORB 161 – 10/04:32	BKN200	7	220/08P12

<u>OMS TANK FAIL CAPABILITY:</u>

L OMS FAILS: NO
R OMS FAILS: NO

<u>LEAKING OMS PRPLT BURN:</u>

L OMS LEAK: ALWAYS BURN RETROGRADE
R OMS LEAK: ALWAYS BURN RETROGRADE

<u>OMS QUANTITIES(%)</u>

L OMS OX = 34.08 R OMS OX = 35.28
FU = 33.60 FU = 35.21

DELTA V AVAILABLE:

OMS	369 FPS
ARCS (TOTAL ABOVE QTY1)	31 FPS
TOTAL IN THE AFT	400 FPS
ARCS (TOTAL ABOVE QTY2)	64 FPS
FRCS (ABOVE QTY 1)	27 FPS
AFT QTY 1	80 %
AFT QTY 2	42 %

SYSTEM	FAILURE	IMPACT	WORK AROUND
EVA	Misalignment of spherical bearing caused the clevis to bend when applying torque to ATA bolt 1.	Difficulty engaging ATA bolt 1 during installation on LMC. Loss of crew time and loss of EVA and mission objectives, including LWAPA Retrieve and P1 Radiator Grapple Fixture Beam Inspection.	Crew released bolt 3 and were able to install bolt 1 to proper torque. Bolt 3 was reengaged, requiring multiple attempts with the torque multiplier to achieve acceptable torque and turns.

Good Morning Naoko and Steph,

Today's your last day of MPLM transfer! Just a few more items to pack up and then you'll be ready to button up the MPLM one last time.

Today you'll be packing a second RFTA in the MPLM following the R&R activity. Shortly thereafter the CPAs will be installed, which will limit you to transferring small items only. Then at the end of the day, after the MPLM is ready to go, you'll be scavenging the remaining four LHAs, leaving the MPLM a rather dark place.

The Transfer List Excel file, FD10_Transfer_List_STS131.xls, locations are:

- Shuttle: **C:\OCA-up\transfer** (KFX machine)
- Station: **K:\OCA-up\transfer**

<u>Transfer Notes</u>

- **Lost Return Items and WHC Return Items:** Considering a couple items are still missing for MPLM return and you've identified some additional used WHC hardware, we have updated your return plan to backfill Item 629 with the used WHC hardware.

- **Item 721 (Catalytic Reactor):** Steph, the Catalytic Reactor can be stowed in Bag C without the top piece of Catalytic Reactor foam; however, there are additional pieces of white foam already in Bag C that can be used to protect the ORU. The Middeck Stowage team has sent you directions for stowing the Catalytic Reactor for return (ref MSG 085).

- **Item 950 (Imaging Processing Unit Stowage Bag):** Steph, we understand you were not able to find Item 950 in 3.0 CTB s/n 1068 yesterday. You can also try looking at COL1A2 if you still haven't found it. It is a blue nomex kit, as shown in the photo below.

Imaging Processing Unit Stowage Bag

- **Small Pieces of Foam:** If you still have smaller pieces of foam to stow, we recommend you utilize MPL1P4_A1.

- **Item 431.1:** Naoko, please remember to transfer the JAXA Nanoskeleton samples only after 2.5 hours following the MELFI retrieval activity to ensure they completely thaw and reach a safe touch temperature. Your timeline reflects this constraint as well.

<u>FD10 Choreography</u> (in timeline order)

- **Item 1000:** Transfer RFTA (s/n 011) to MPLM for return following the RFTA R&R.
- Install CBM CPAs.
- **Items 187 and 707:** Swap PGTs following a successful checkout of the new PGT.
- **Item 431.1:** Transfer JAXA Nanoskeleton samples 2.5hrs after MELFI retrieval activity
- **Item 750:** Stow black clips from MPLM Kit in MPLM for return.
- **Item 294:** Transfer endcone bungee jail to ISS.
- **Item 109:** Transfer A1 inter-rack bungee jail to ISS.
- MPLM Cleanup
    - **Item 824:** Return Pivot Fittings used to rotate RSPs to ISS.
- Configure MPLM racks for entry.
- **Item 105:** Scavenge MPL1PA1, PA2, PF1, and PF3 LHAs - call MCC to open RPCs.
- **Transfer all remaining MPLM items:**
    - **Resupply:** 106, 107, 137, 171, 174, 175, 186, 199, 200, 201, 260, 261
    - **Return:** 423, 629, 807, 809, 810, 813, 821, 822, 823, 1008, 1009, 1010, 1011, 1012

Please incorporate uplink pages as follows (we've listed the updates in the order they printed out for you):

In the Middeck Transfer List **RETURN** tab
Pen & Ink on the following pages:
Return 1 - Item 431.1: update activity day in notes from "FD09" to "FD10"
Return 4 - Item 702: update activity day in notes from "FD11" to "FD13"
Return 6 - Item 713: update activity day in notes from "FD11" to "FD13"
Return 6 - Item 716: update activity day in notes from "FD10" to "FD11"

In the MPLM Return Transfer List **RETURN** tab
Replace the following page:
Return 17

Add the following page:
Return 32

In the MPLM Return Transfer List **MPLM CLEANUP** tab
Pen & Ink on the following pages:
Return 30 - Item 824: update Stowage at Undock location from "NOD2O5_A2" to "LAB1P1_A2"

<u>FD11 Choreography</u> (in timeline order)

- **Items 822 & 823:** Return the MPLM PBA and PFE to ISS.
- Transfer the following EVA items to the Middeck:
  - **Items 703 & 704:** EMU's s/n 3008 & 3017
  - **Item 708:** EVA Systems Transfer Bag
- **Item 716:** Transfer the NLP Cells 3 Stow Bag per CGBA-5 NLP CELLS REMOVE activity.

- The STS-131 Transfer Team

MSG 078 (23-0275) - FD10 CREW CHOICE DOWNLINK

The following times indicate good Shuttle Sband on A/G 2 and ISS Ku for crew choice downlink.

AOS	LOS	Delta (min)	Notes
09/06:27	09/07:11	44	A/G 20 second H/O at 06:42:51
09/07:34	09/08:51	77	A/G gap from 07:58:16-08:03:38 KU 20 second H/O at 08:09:21 A/G 20 second H/O at 08:34:42 KU gap from 08:37:00-08:39:00
09/09:15	09/09:58	43	A/G 20 second H/O at 09:32:56

Note: Please notify MCC-H 10 minutes prior to the event to allow for ground network configuration.

Great job completing all three EVAs!

You heard yesterday that we had a few issues with the NTA. This has no correlation to your EVA activities. The ground sees good data on the S1 ATA and it looks to be in great shape!

Both sets of EMU gloves have been cleared for contingency EVA use.

The EVA Tool Restow scheduled for Rick, TJ and Tracy today is scheduled for a duration of 1:25. Please reference message 23-0266 (131-081) for details. We don't expect you'll have time to complete everything, so we are working to schedule more time. Feel free to use crew notes in OSTPV to give us input on the restow matrix.

We have a stowage question for you as well as some pen and ink changes to your EVA Checklist for new items you are bringing home.

Stowage Question
What was the final stowage location of Soichi's prime CCA (s/n 1215) in the ISS A/L? This was the CCA that TJ gave to you during EVA Prep for EVA 2 as a second back-up CCA.

EVA Checklist Pen and Inks
We will be bringing home a total of 6 wire ties from ISS. These wire ties protect for a RCC repair contingency EVA if required post-undock. The EVA trash bags that would be used as a holster for the NOAX gun are currently stowed in the STBD TSA, so these wire ties would be used instead to fashion a holster and provide rabbit ears. There is no need to configure the wire ties at this time.

1. Add the following to the table after step 28 of FS 2-14 Post EVA EMU Reconfig:

EVA Systems Transfer Bag	
Current Location	Item
A/L Deployed	Short Wire Tires (4) Long Wire Tires (2)

2. Add the following in step 1 of FS 2-16 EVA Unpack and Stow to the table under **EVA Systems Transfer Bag**:

Item	**Final Location**
Short Wire Tires (4) Long Wire Tires (2)	A/L Floor Bag

Big Picture for Myco Experiment during 19A

1. Timeline for Myco Experiment

- Myco Experiment will be performed within 60 hours before hatch close.
- Myco SAMPLE CLCT and the following MELFI INS should be time critical tasks. (Blue marked in the Fig. 1)
- Joint operations between Shuttle crew and ISS crew are very important.

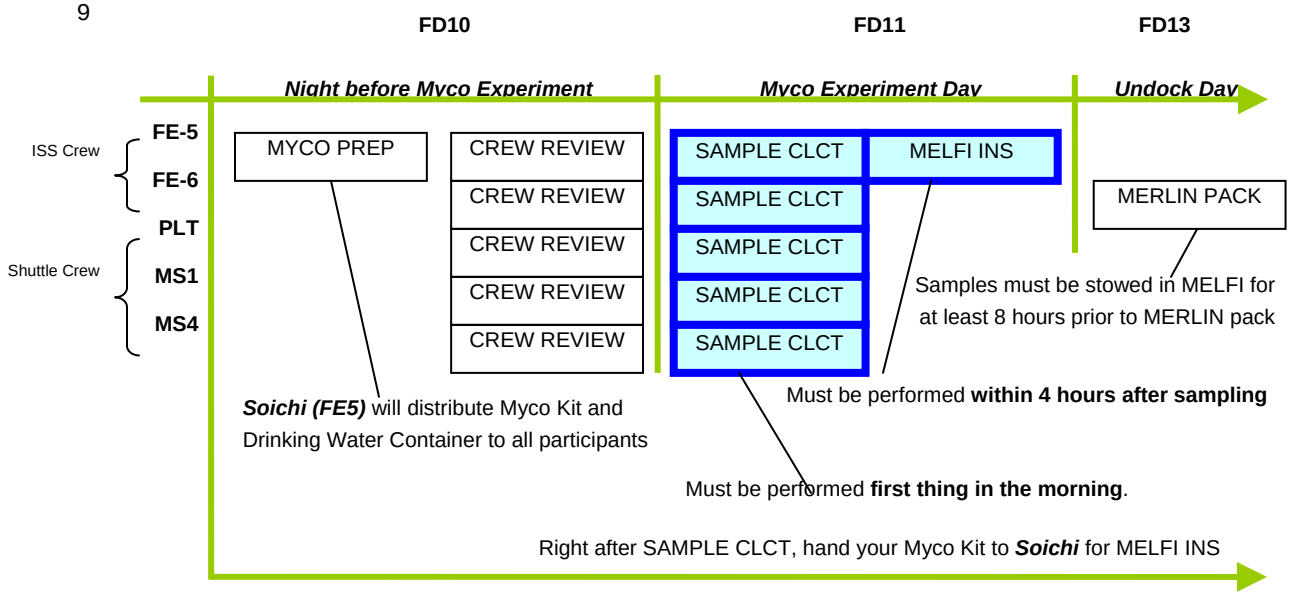

MYCO PREP : Preparation of Myco Kit and *Drinking Water Container*1*.

CREW REVIEW : Procedure review. *Review scientific constraints of the experiment.*

SAMPLE CLCT : Collection of body samples. *Hand your Myco Kit to **Soichi (FE5)**.*

MELFI INS : Insertion of all Myco Kit into MELFI.

MERLIN PACK : Transfer of Myco Kit from MELFI to MERLIN.

**1 Drinking Water Container is for rinsing mouth before pharynx sample collection*

Fig. 1 Big picture for Myco Experiment Operations Flow in 19A

2. Precautions and important notice for Myco Experiment

Precautions

- The sample collection must be ***performed first thing in the morning*** because we need samples from the body in the “just-woke-up” condition.
- Please do not eat/drink anything except water, wash your face, brush your teeth, or gargle after you wake up to avoid science loss.

Important Notice

- MELFI Insertion must be performed within 4 hours after Sample Collection to avoid deterioration of the samples.
- Myco Kit must be stowed in MELFI at +4 deg C for at least 8 hours before it is moved into MERLIN for return. For this reason, ***replan is not an option*** based on the latest timeline.

OVERVIEW: This message is designed to restow the tools deployed for the 19A EVAs and configure for the ULF4 EVAs.

PROCEDURE:

1. **CONFIRM** that there is a D-Ring Extender on A/L D-Ring.
2. **REMOVE** all tethers and D-ring extenders from all bags, MWS and suits and **STOW** them on the tether staging area. Also **TEMP STOW** any wire ties you consider re-usable for ULF4.
3. **MOVE** any items inside the mesh bags, crewlock bags, and deployed ORU bags into the "**Done Tools**" mesh bag.
4. **REMOVE** any labels from Crewlock Bags.
5. **RELABEL** an empty mesh bag: **"ULF4 Tools".**
6. **COMPLETE** Tables A - K.
7. **REPORT** to MCC-H when activity is complete, the requested S/N information, and any deltas.

For help identifying the correct S/N's, reference 2.220.100 EVA Tool Serial Number Reference (SODF: EVA TASK: TOOLS REFERENCE).

Table A: Configure EV1 MWS

Item #	☑	Location	Item	QTY	P/N	S/N	B/C	Final Location	Notes
1		**EV1**	MWS Baseplate [Modular Baseplate Assembly]	1	SEG33110490-303	1001	00008735J	**EV1**	**NOTE**: These will be swapped with a new baseplate and t-bar when they arrive with ULF4.
2			MWS T-Bar	1	SEG33110493-305	1031	-		
3			Small EVA Trash Bag	1	SEG33106678-301	1006	-	**Crewlock Bag #3**	**CONFIRM** empty & zipped up.
4		**EV1**	Swing Arm Assy, RH	1	SEG33110491-307	1004	-	**EV1**	
5			PGT	1	GE1557000	#6	-		
6			7/16 x 6" Wobble	1	SEG33106931-301	1019	004343J		
7			Body Restraint Tether [BRT Assembly]	1	SEG33110400-309	1001	-		
8		**A/L1O0** 1.0 CTB: EVA Miscellaneous Tools #1, S/N 1075, B/C 004069J	EVA Trash Bag [Shuttle Style]	1	10165-10065-03	1017	-		**CONFIRM** empty & zipped up. **STOW** on T-Bar.
9		**Temp Stowed** (used for 19A) or **A/L1O0** Ziplock	Wire Ties [Short]	4	SDG33108130-001	-	-		**STOW** (don't configure) on the T-bar as tether loops.
10			Wire Tie [Long]	2	SDG33108130-003	-	-		**STOW** (don't configure) wire ties on BRT.

11		**A/L Deployed** Mesh Bag: 19A Done Tools	WIF Adapter	1	SEG33106863-309	1013	-	**EV1**	**STOW** on RET w/ PIP Pin attached to the T-Bar.
12		**A/L1D2** Tether Staging Area	Item Deleted						
13			Item Deleted						
14			Eq Hk RET [Sm-Sm]	2	SEG33106164-381	-	-		**Use Red RETs** **STOW** 1 on the BRT and use 1 to connect the PGT to the swing arm.
15			Eq Hk RET w/Pip Pin	2	SEG33106164-383	-	-		**Use Red RETs** **STOW** on the T-Bar. Use 1 to connect WIF Adapter to T-Bar.
16			Adjustable Equipment Tether [Sm-Sm]	2	SEG33106945-307	-	-		**REPORT** S/Ns to MCC-H. **STOW** directly on the T-Bar.
17			Item Deleted						

EV1:

- ◻ MWS - (Item #1)
  - ◻ T-Bar - (Item #2)
    - ◻ Shuttle Style Trash Bag - (Item #8)
    - ◻ 4 – Wire ties as tether loops - (Item #9)
    - ◻ RET (PIP-pin) - (Item #15)
    - ◻ RET (PIP - pin) - (Item #15)
      - ◻ WIF Adapter - (Item #11)
    - ◻ 2 – AETs - (Item #16)
    - ◻ Swing Arm (right side) - (Item #4)
      - ◻ RET sm-sm - (Item #14)
        - ◻ PGT - (Item #5)
          - ◻ 6-in ext - (Item #6)
    - ◻ BRT (left side) - (Item #7)
      - ◻ RET sm-sm - (Item #14)
      - ◻ 2 – long wire ties - (Item #10)

REPORT any additional items found to MCC-H.

Table B: Configure EV2 MWS

Item #	☑	Location	Item	QTY	P/N	S/N	B/C	Final Location	Notes
18		**EV2**	MWS Baseplate [Modular Baseplate Assembly]	1	SEG33110490-303	1002	-	**EV2**	**NOTE**: These will be swapped with a new baseplate and t-bar when they arrive with ULF4.
19			MWS T-Bar	1	SEG33110493-305	1006	-		
20			Small EVA Trash Bag	1	SEG33106678-301	1007	-		**CONFIRM** empty & zipped up.
21			Swing Arm Assy, RH	1	SEG33110491-307	1003	-		
22			PGT	1	GE1557000	#1	-		
23			7/16 x 6" Wobble	1	SEG33106931-301	1007	-		
24			Body Restraint Tether [BRT Assembly]	1	SEG33110400-309	1021	-		

25		**A/L1D2** Tether Staging Area	Eq Hk RET [Sm-Sm]	2	SEG33106164-381	-	-	**EV2**	**Use Red RETs** **STOW** 1 on the BRT and use one to connect the PGT to the swing arm.
26			Eq Hk RET w/Pip Pin	2	SEG33106164-383	-	-		**Use Red RETs** **STOW** both on the T-Bar.
27			Item Deleted						
28			Item Deleted						
29			Item Deleted						
30		**Temp Stowed** (used for 19A) or **A/L1O0** Ziplock	Wire Ties [Short]	3	SDG33108130-001	-	-		**STOW** (don't configure) 1 wire ties on BRT and 2 on the T-bar as tether loops.
31			Wire Tie [Long]	1	SDG33108130-003	-	-		**STOW** (don't configure) 1 wire tie on BRT.

EV2:

- ◻ MWS - (Item #18)
  - ◻ T-Bar - (Item #19)
    - ◻ Small Trash Bag - (Item #20)
    - ◻ 2 – Wire tie as tether loops - (Item #30)
    - ◻ 2 – RET (PIP-pin) - (Item #26)
    - ◻ Swing Arm (right side) - (Item #21)
      - ◻ RET sm-sm - (Item #25)
        - ◻ PGT - (Item #22)
          - ◻ 6-in ext - (Item #23)
    - ◻ BRT (left side) - (Item #24)
      - ◻ RET sm-sm - (Item #25)
      - ◻ 1 – short wire tie - (Item #30)
      - ◻ 1 – long wire tie - (Item #31)

REPORT any additional items found to MCC-H.

Table C: Confirm Staging Bag Config

Item #	☑	Location	Item	QTY	P/N	S/N	B/C	Final Location	Notes
32		**A/L Crewlock** Staging Bag	Adjustable Fuse Tether [Fish Stringer]	1	SED39127200-705	1011	-	**A/L Crewlock** Staging Bag	
33			Needle Nose Pliers	1	SEG33106921-301	1007	-		**MOVE** to Fish Stringer #1032.
34			Wire Tie Caddy Assy	1	SEG33111586-301	1005	-		**CONFIRM** that this caddy contains 9 wire ties.
35			Tape and Velcro Caddy	1	SED33104207-301	1005	-		
36			PGT	1	GE1557000	#4	-		
37			7/16 x 6" Wobble	1	SEG33106931-301	1018	-		**REMOVE** from PGT and **STOW** on EVA Ratchet.
38			EVA Ratchet	1	SEG33106927-303	1012	-		

39		**A/L Crewlock** Staging Bag	7/16 x 9" Rigid	1	SEG33106930-305	1013	001956J	**A/L1O0** 1.0 CTB: EVA Miscellaneous Tools #2, S/N 1161, B/C 004155J	**REMOVE** from EVA Ratchet.
40			Safety Tether 85ft	1	SED33116109-307	-	-	**A/L1D2** Tether Staging Area	**REPORT** large ID # to MCC-H.
41			WIF Adapter	1	SEG33106863-309	1015	-	**A/L Crewlock** Staging Bag	
42			Adjustable Fuse Tether [Fish Stringer]	1	SED39127200-705	1032	-		
43			Connector Cleaner Tool Kit	1	SJG33111630-301	1010	-		**MOVE** from hook #1 to hook #2
44			MMWS Key Strap Assembly	1	SEG33110812-301	1008	00008653J		On wire tie, to strap.
45			LDTD Tether	1	SEG33113860-301	1006	-		**MOVE** to Fish Stringer #1011 hook #6.
46			Cheater Bar	1	SEG33106926-301	1002	-		
47			Eq Hk RET [Sm-Sm]	1	SEG33106164-381	-	-	**A/L1D2** Tether Staging Area	
48			BRS Tool	1	SEG33113644-305	1001	-	**A/L1D2** 1.0 CTB: Unique EVA Tools, S/N 1022, B/C 002317J	**INSPECT** tool for any damage. **REPORT** to **MCC-H.** **VERIFY** BRS Sheath installed on the tool.
49			Right Angle Drive	1	SEG33106925-305	1009	-	**A/L1O0** 1.0 CTB: EVA Miscellaneous Tools #2, S/N 1161, B/C 004155J	
50		**A/L1O0** 1.0 CTB: EVA Miscellaneous Tools #2, S/N 1161, B/C 004155J	Enhanced Right Angle Drive	1	SEG33120447-301	1002	-	**A/L Crewlock** Staging Bag	
51			Item Deleted						

52		**A/L Deployed** Mesh Bag: 19A Done Tools	Pry Bar	1	SDG33106924-001	1004	00001199J	**A/L Crewlock** Staging Bag	**STOW** on fish stringer 1032.
53			LDTD Tether	2	SEG33113860-301	-	-		**HOOK** with the other LDTD Tether on Fish stringer #1011 hook #6 (all three LDTD chained together).
54			Vise Grip Pliers	1	SEG33106922-301	1001	-		**STOW** on fish stringer 1011.
55			Pin Straightener Assy	1	SEG33106913-301	1001	001948J		
56			PROBE	1	SEG33106923-701	1001	-		

Staging Bag:

- ◻ Fish Stringer - (Item #32)
  - ◻ Wire Tie Caddy (hook #1) - (Item #34)
    - ◻ 9 wire ties - (Item #34)
  - ◻ Velcro/Tape Caddy (hook #2) - (Item #35)
  - ◻ PGT (hook #3) - (Item #36)
  - ◻ Vise Grips (hook #4) - (Item #54)
  - ◻ Ratchet Wrench (hook #5) - (Item #38)
    - ◻ 7/16-in (wobble) Socket – 6 ext - (Item #37)
  - ◻ 3 - Long Duration Tie Down Tethers (hook #6) - (Items #45 & #53)
  - ◻ WIF Adapter (hook #7) - (Item #41)
- ◻ Fish Stringer #2 - (Item #42)
  - ◻ ERAD (hook #1) - (Item #50)
  - ◻ Connector Cleaner Tool Kit (hook #2) - (Item #43)
  - ◻ Pin Straightener Assy (hook #3) - (Item #55)
  - ◻ Probe (hook #4) - (Item #56)
  - ◻ Prybar (hook #5) - (Item #52)
  - ◻ Needlenose Pliers (hook #6) - (Item #33)
  - ◻ Cheater Bar (hook #7) - (Item #46)
  - ◻ MWS Key Strap Assy (on wire tie, to strap) - (Item #44)

REPORT any additional items found to MCC-H.

Table D: Confirm IV Bag Config

Item #	☑	Location	Item	QTY	P/N	S/N	B/C	Final Location	Notes
57		**A/L Crewlock** IV Bag	ISS Contamination Detection Kit	1	SJG39136050-302	1001	-	**A/L Crewlock** IV Bag	**CONFIRM** contents and configuration of IV Bag. Black RETs stay in this bag (not for EVA).
58			Towel [Wrapped with short wire tie]	2	-	-	-		
59			Eq Hk RET [Sm-Sm]	1	SEG33106164-381	4062	-		
60			SAFER Hand Controller Mount [DCM Plug]	1	SV1006962-2	'00004	00051187J		
61			SAFER Hand Controller Mount [DCM Plug]	1	SV1006962-2	'00007	00059995J		
62			Eq Hk RET [Sm-Sm]	1	SEG33106164-381	4063	-		
63			ISS GP Caddy	1	SEG33113531-301	1008	-		
64			Adjustable Thermal Mitten	1	0106-811540-03	'022	EMUG15J		
65			Adjustable Thermal Mitten	1	0106-811540-04	'022	EMUA16J		
66			ISS GP Caddy	1	SEG33113531-301	1010	-		
67			Adjustable Thermal Mitten	1	0106-811540-03	'023	EMUG19J		
68			Adjustable Thermal Mitten	1	0106-811540-04	'023	EMUG20J		
69			Eq Hk RET [Sm-Sm]	1	SEG33106164-381	4073	-		
70			Socket Caddy Assy	1	SEG33106938-301	1011	-		
71			1/2 x 8" Wobble	1	SEG33108423-301	1004	-		
72			7/16 x 6" Wobble	1	SEG33106931-301	1014	-		
73			Ammonia Contamination Cue Card	1	-	-	-		

IV Bag:

- ◻ Ammonia Contamination Cue Card - (Item #73)
- ◻ 2 - Towels - (Item #58)
- ◻ Contamination Detection Kit - (Item #57)
- ◻ RET (sm-sm, black) - (Item #59)
  - ◻ 2 - DCM Plug - (Item #60 & 61)
- ◻ RET (sm-sm, black) - (Item #62)
  - ◻ 2 - GP Caddy - (Item #63 & #66)
    - ◻ 2 - Adjustable Thermal Mittens - (Item #64, #65, #67, & #68)
- ◻ RET (sm-sm, black) - (Item #69)
  - ◻ Socket Caddy - (Item #70)
    - ◻ 1/2-in Socket-8 ext - (Item #71)
    - ◻ 7/16 (wobble) Socket-6 ext - (spare) (Item #72)

REPORT any additional items found to MCC-H.

Table E: Configure A/L RETs

Item #	☑	Location	Item	QTY	P/N	S/N	B/C	Final Location	Notes
74		**A/L1D2** Tether Staging Area	Lg-Eq RET [Lg-Sm]	1	SEG33106164-385	-	-	**A/L Deployed**	**Use Red RET**
75			Eq Hk RET [Sm-Sm]	1	SEG33106164-381	-	-		**Use Red RET**
76		**LAB1D4** 0.5 CTB: HODGE PODGE 2, S/N 1294	PDGF UNIVERSAL MCF ADAPTER ASSEMBLY (PUMAA)	1	260213-207676-551	-	-	**A/L Deployed** Lg-Eq RET	
77		**A/L Deployed** Mesh Bag: 19A Done Tools	Round Scoop	1	SEG33107677-301	1002	-		

A/L Deployed RETs:

- ◻ RET Lg-sm - (Item #74)
  - ◻ Round Scoop - (Item #77)
    - ◻ PUMAA - (Item #76)
      - ◻ Eq Hk RET sm-sm - (Item #75)

REPORT any additional items found to MCC-H.

Table F: Configure Medium ORU Bag: EOTP Bag

Item #	☑	Location	Item	OTY	P/N	S/N	B/C	Final Location	Notes
78		**A/L Deployed**	Medium ORU Transfer Bag	1	SEG33114494-309	1004	-	**A/L Deployed**	
79		**A/L1D2** Tether Staging Area	Lg-Eq RET [Lg-Sm]	1	SEG33106164-385	-	-		**Use Red RET**. Use RET to attach Medium ORU Bag to A/L.
80			Eq Hk RET [Sm-Sm]	5	SEG33106164-381	-	-	**A/L Deployed** Medium ORU Bag	**Use Red RET** **STOW** on internal D-ring.
81			Adjustable Fuse Tether [Fish Stringer]	1	SED39127200-705	-	-		**REPORT** S/N to MCC-H. **STOW** on RET.
82			Adjustable Equipment Tether [Sm-Sm]	1	SEG33106945-307	-	-		**REPORT** S/N to MCC-H. **STOW** on external D-Rings
83			Adjustable Equipment Tether [Lg-Sm]	1	SEG33106945-309	-	-		**REPORT** S/N to MCC-H. **STOW** on external D-Rings
84		**A/L1O0** 1.0 CTB: EVA Miscellaneous Tools #2, S/N 1161, B/C 004155J	Drop Proof Tether Adapter	1	SEG33106947-301	1013	-		**STOW** on Socket Caddy.
85			Square Torque Multiplier	1	SEG33106261-301	1003	-		
86			7/16" Socket Recessed Square Torque Multiplier	1	SDG33107087-009	1010	-		**VERIFY** socket installed on Torque Multiplier.
87		**A/L Deployed**	Crewlock Bag #2	1	SEG33111751-303	1004	-		Center divider snapped in place. **Stow** on RET.
88		**A/L Deployed** Mesh Bag: 19A Done Tools	7/16 x 2" Rigid	2	SEG33106930-301	1006 1008	-		**STOW** both sockets on EVA Ratchets (item #90)
89			Socket Caddy	1	SEG33106938-301	1001			**STOW** on fish stringer.
90			EVA Ratchet	2	SEG33106927-303	1011 1015	-		**Stow** on separate hooks.

91		**A/L1O1** M-02 Bag, S/N 1038	Torque Wrench Bag	1	SEG33110183-301	1003	-	**A/L Deployed** Medium ORU Bag	**Stow** on RET.
92			Torque Wrench	1	SEG33106948-301	1007	-		

Medium ORU Bag:

- ◻ RET Lg-sm (A/L stowage) - (Item #79)
  - ◻ Med ORU – EOTP Bag - (Item #78)
    - Internal D-rings
    - ◻ RET sm-sm - (Item #80)
      - ◻ Fish Stringer - (Item #81)
        - ◻ Empty (hook #1, closest to Fish Stringer hook attached to RET)
        - ◻ Socket Caddy (hook #2) (Item #89)
          - ◻ DPTA (Item #84)
        - ◻ Empty (hook #3)
        - ◻ Ratchet Wrench (hook #4) (Item #90)
          - ◻ 7/16 x 2" Rigid - (Item #88)
        - ◻ Ratchet Wrench (hook #5) (Item #90)
          - ◻ 7/16 x 2" Rigid - (Item #88)
        - ◻ RET sm-sm (hook #6) - (Item #80)
          - ◻ Crewlock Bag (Item #87)
        - ◻ Torque Multiplier (hook #4) (Item #85)
          - ◻ 7/16" Socket Recessed Square Torque Multiplier (Item #86)
    - ◻ RET sm-sm - (Item #80)
    - ◻ RET sm-sm - (Item #80)
      - ◻ Torque Wrench (in bag) - (Items #91 & #92)
    - ◻ RET sm-sm - (Item #80)
    - External D-rings
    - ◻ 1 – AET Sm-Sm (Item #82)
    - ◻ 1 – AET Lg-Sm (Item #83)

REPORT any additional items found to MCC-H.

Table G: Configure Medium ORU Bag: SGANT Bag

Item #	☑	Location	Item	QTY	P/N	S/N	B/C	Final Location	Notes
93		**A/L Deployed**	Medium ORU Transfer Bag	1	SEG33114494-309	1005	-	**A/L Deployed**	
94		**A/L1D2** Tether Staging Area	Lg-Eq RET [Lg-Sm]	1	SEG33106164-385	-	-		**Use Red RET**. Use 1 RET to attach Medium ORU Bag to A/L.
95			Eq Hk RET [Sm-Sm]	6	SEG33106164-381	-	-	**A/L Deployed** (Med ORU Bag)	**Use Red RET**
96			Adjustable Fuse Tether [Fish Stringer]	2	SED39127200-705	-	-		**REPORT** S/N to MCC-H.
97			Adjustable Equipment Tether [Sm-Sm]	3	SEG33106945-307	-	-		**REPORT** S/Ns to MCC-H. **STOW** 2 inside the medium ORU bag 1 on the external D-Rings.
98			Adjustable Equipment Tether [Lg-Sm]	1	SEG33106945-309	-	-		**REPORT** S/Ns to MCC-H. **STOW** on the external D-Rings.
99		**A/L1O0** 1.0 CTB: EVA Miscellaneous Tools #2, S/N 1161, B/C 004155J	Enhanced Right Angle Drive	1	SEG33120447-301	1003	-		
100			Round Scoop	1	SEG33107677-301	1001	-		
101		**A/L Deployed** Mesh Bag: 19A Done Tools	CONNECTOR HANDLE [aka Cannon Connector Tool]	1	S22698-006-005	-	-		
102		**A/L1D2** 1.0 CTB: Unique EVA Tools, S/N 1022, B/C 002317J	CONNECTOR HANDLE [aka Cannon Connector Tool]	1	S22698-006-005	-	-		

Medium ORU Bag:

- ◻ RET Lg-sm (A/L stowage) - (Item #94)
  - ◻ Med ORU – SGANT Bag - (Item #93)
    - Internal D-rings
    - ◻ RET sm-sm - (Item #95)
      - ◻ Fish Stringer #1 - (Item #96)
        - ◻ Round Scoop (hook #1, closest to Fish Stringer hook attached to RET) - (Item #100)
        - ◻ RET sm-sm (hook #2) - (Item #95)
          - ◻ AET - (Item #97)
        - ◻ Empty (hook #3)
        - ◻ Empty (hook #4)
        - ◻ Empty (hook #5)
        - ◻ Empty (hook #6 will be for the AGIT Heat Shield arriving on ULF4)
        - ◻ ERAD (hook #7) - (Item #99)
    - ◻ RET sm-sm - (Item #95)
      - ◻ Fish Stringer #2 - (Item #96)
        - ◻ Empty (hook #1, closest to Fish Stringer hook attached to RET)
        - ◻ Empty (hook #2)
        - ◻ Empty (hook #3)
        - ◻ Empty (hook #4)
        - ◻ Empty (hook #5)
        - ◻ AET (to provide 2 tether points) (hook #6) - (Item #97)
        - ◻ 2 - RET sm-sm - (Item #95)
          - ◻ Cannon Connector Tool to RET hook #1- (Item #101)
          - ◻ Cannon Connector Tool to RET hook #2- (Item #102)
    - ◻ RET sm-sm - (Item #95)
    - External D-rings
    - ◻ 1 – AET Sm-sm - (Item #97)
    - ◻ 1 – AET Lg-sm - (Item #98)

REPORT any additional items found to MCC-H.

Table H: Configure Crewlock Bag #3 and mark "T" with Tape

Item #	☑	Location	Item	QTY	P/N	S/N	B/C	Final Location	Notes
102		**A/L1O0** 1.0 CTB, S/N 1013, B/C 002308J	MUT End Effector Assy	2	SEG33106890-303	1001 1004	0003186J 00018512J	**Crewlock Bag #3**	**STOW** on Integral RETs.
103			Ballstack	1	SEG33106870-703	1013	-		
104		**A/L1D2** Tether Staging Area	Adjustable Equipment Tether [Sm-Sm]	1	SEG33106945-307	-	-		**REPORT** S/Ns to MCC-H. **STOW** on ballstack.

Crewlock Bag #3:
Integral RETs
- ☐ MUT EE - (Item #102)
- ☐ MUT EE - (Item #102)
- ☐ ISS small trash bag - (Item #3)

Internal D-rings
- ☐ Ballstack - (Item #103)
  - ☐ AET sm-sm (one hook on internal D-ring, one hook on ballstack tether loop) - (Item #104)

Table I: Configure Crewlock Bag #4 and mark "P" with Tape

Item #	☑	Location	Item	QTY	P/N	S/N	B/C	Final Location	Notes
105		**A/L Deployed** Mesh Bag: 19A Done Tools	Square Scoop	1	SEG33106330-301	1001	-	**Crewlock Bag #4**	
106		**A/L1O0** 1.0 CTB: EVA Miscellaneous Tools #2, S/N 1161, B/C 004155J	Square Scoop	3	SEG33106330-301	1002 1003 1004	-		

Crewlock Bag #4:
Integral RETs
- ☐ Square Scoop - (Item #105)
- ☐ Square Scoop - (Item #106)
- ☐ Square Scoop - (Item #106)
- ☐ Square Scoop - (Item #106)

REPORT any additional items found to MCC-H.

Table J: Deploy Tether in A/L for Camera

Item #	☑	Location	Item	QTY	P/N	S/N	B/C	Final Location	Notes
107		**A/L1D2** Tether Staging Area	Lg-Eq RET [Lg-Sm]	1	SEG33106164-385	-	-	**A/L Deployed**	**Use Red RET**

A/L
- ☐ RET Lg-Sm - (Item #107)

REPORT any additional items found to MCC-H.

Table K: Restow Items in the Done Tools Mesh Bag and Relabel "ULF4 Done Tools"

Item #	☑	Location	Item	QTY	P/N	S/N	B/C	Final Location	Notes
108		**A/L Deployed**	Mesh Bag	1	SKD13101494-305	-	-	**Crewlock Deployed**	**LABEL "ULF4 Tools"**
109			ORU Transfer Bag Large	1	SEG33114494-307	1002	00008707J	**A/L Attic**	
110		**A/L Deployed** Mesh Bag: Done Tools	1/4"X1/2" Allen Driver [MMOD Shield T-Handle (Short)]	2	SED39127091-301	1003	-	**A/L1O0** 1.0 CTB: EVA Miscellaneous Tools #2, S/N 1161, B/C 004155J	
111			Socket Caddy Assy	1	SEG33106938-301	1010	001945J		
112			5/8 x 7.8" Rigid	1	SEG33106934-301	1002	-		
113			Round Torque Multiplier	1	SEG33106260-301	1002	-		
114			7/16" Socket Flush Round Torque Multiplier	1	SDG33107087-003	1012	-		
115		**A/L Deployed** Mesh Bag: Done Tools	NH3 QD Cap	2	1F45580-1	-	-	**A/L1D2** 1.0 CTB: Unique EVA Tools, S/N 1022, B/C 002317J	**RETRIEVE** an empty Ziplock and stow these caps inside. **LABEL** ziplock, "**Caps from 19A**". **STOW** these caps inside the ziplock.
116			NH3 QD Cap	2	1F45580-501	-	-		
117			EP1 MLI Blanket	1	-	-	-	**A/L Attic**	
118			Inboard Stowage Beam	1	1F81238-1	-	-	**NOD1D2**	**REPORT S/N** to MCC-H
119			Outboard Stowage Beam	1	1F81240-1	-	-		**REPORT S/N** to MCC-H

23-0252A (MSG-082A) CBM CENTER DISK COVER LOCATE

OBJECTIVE:
Confirm configuration of the CBM Center Disk Covers prior to vestibule closeout.

DURATION:
20 minutes

CREW:
One

MATERIALS:
Sharpie
Kapton Tape

PARTS:
CBM Center Disk Cover P/N 683-14575-14 or 683-14575-15

1. Retrieve damaged CBM Center Disk Cover from NOD2P1. This CBM Center Disk Cover has a broken pip pin on the turnbuckle and a brown damaged spot on the MLI.

> NOTE
> Multiple labels with different part numbers and serial numbers are present on the CBM Center Disk Cover. Only the part number for the label marked 683-14575-14 or 683-14575-15 should be recorded.

   1.1. Confirm P/N (683-14575-14 or 683-14575-15): _____
   1.2. Record S/N: _____
   1.3. Label damaged CBM Center Disk Cover as “Damaged/Removed GMT XXX” (Sharpie, Kapton Tape).

2. Locate replacement CBM Center Disk Cover. Possible locations for replacement (in order of likelihood): NOD3D0 (Endcone), NOD2S2, COL1D1.

> NOTE
> Multiple labels with different part numbers and serial numbers are present on the CBM Center Disk Cover. Only the part number for the label marked 683-14575-14 or 683-14575-15 should be recorded.

   2.1. Record P/N (683-14575-14 or 683-14575-15): _____
   2.2. Record S/N: _____

3. Stow damaged CBM Center Disk Cover where you found the replacement CBM Center Disk Cover.

4. Temp stow replacement CBM Center Disk Cover for use on FD11 for Node 2 Nadir Vestibule Config for Demate.

5. Report to **MCC-H** damaged and replacement CBM Center Disk Cover P/Ns, S/Ns, and locations.

Good Morning,

Below you will find two updated 5-MLE bag layouts (shown first) and the two remaining layouts. Stowage instructions for the Catalytic Reactor have been included in the layout for Bag C. The current 5-MLE bag configurations optimize the weight and c.g. of the stacks.

- The STS-131 Middeck Stowage Team

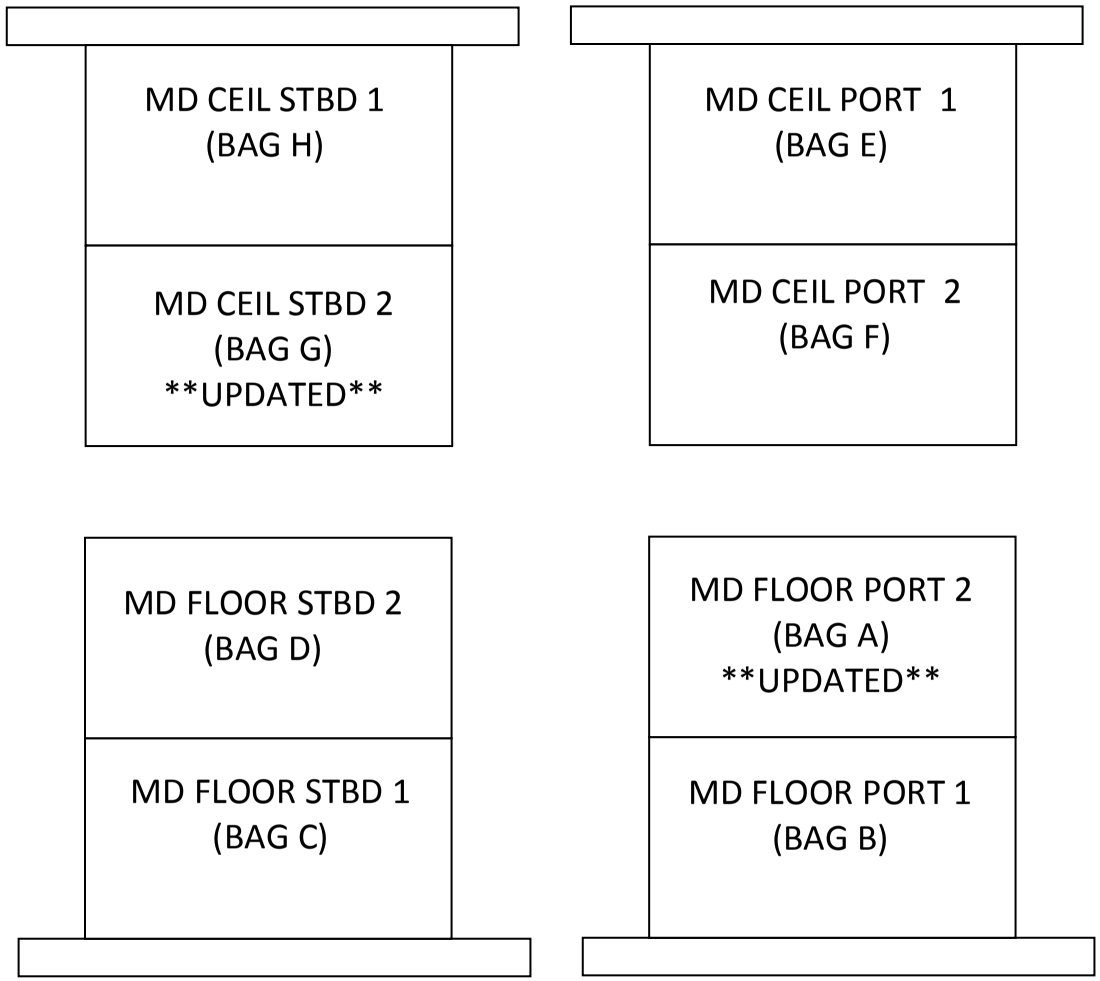

VIEW: DITCH LOOKING AFT

MD CEIL STBD 2(BAG G)

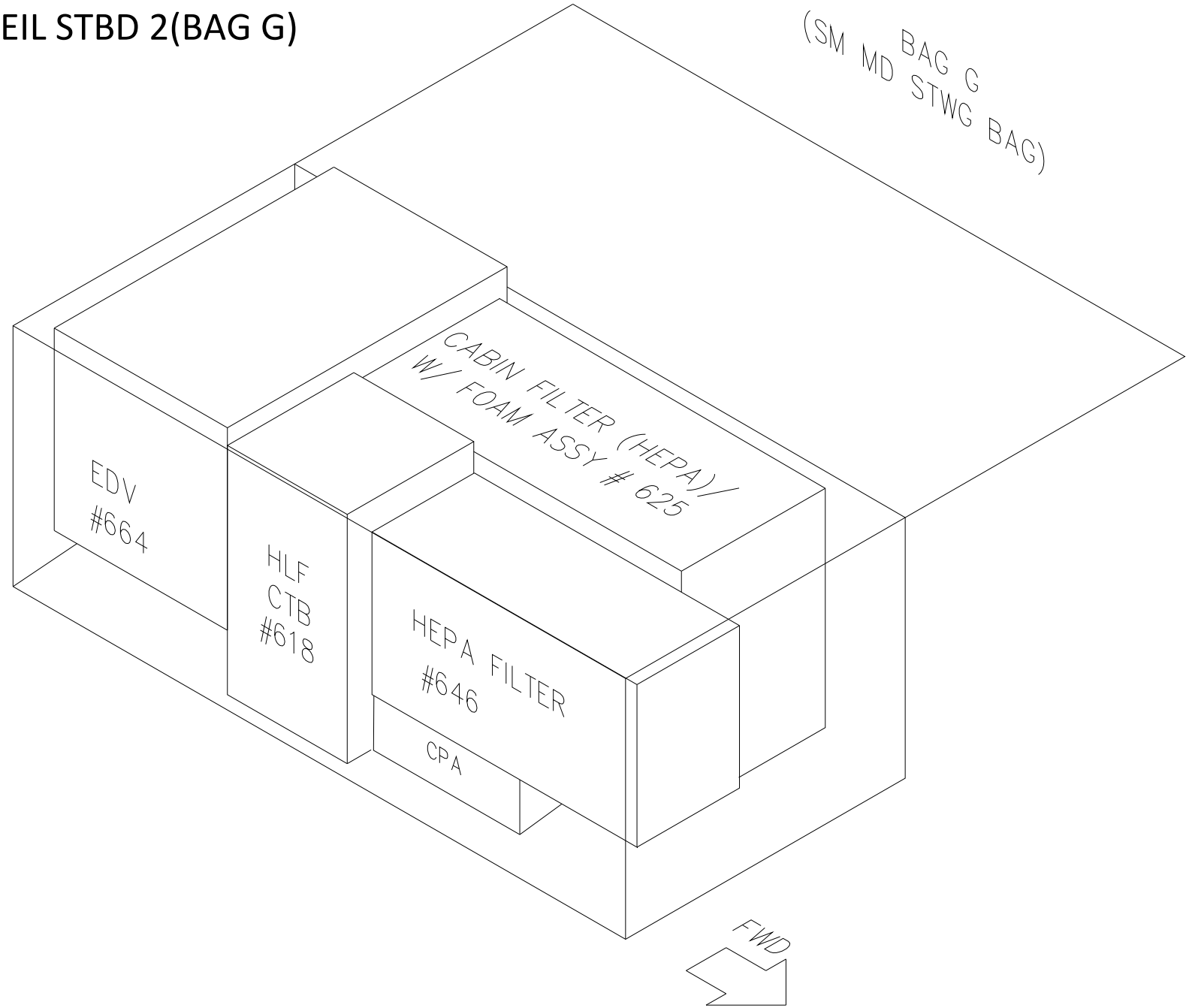

MD FLOOR PORT 2 (BAG A)

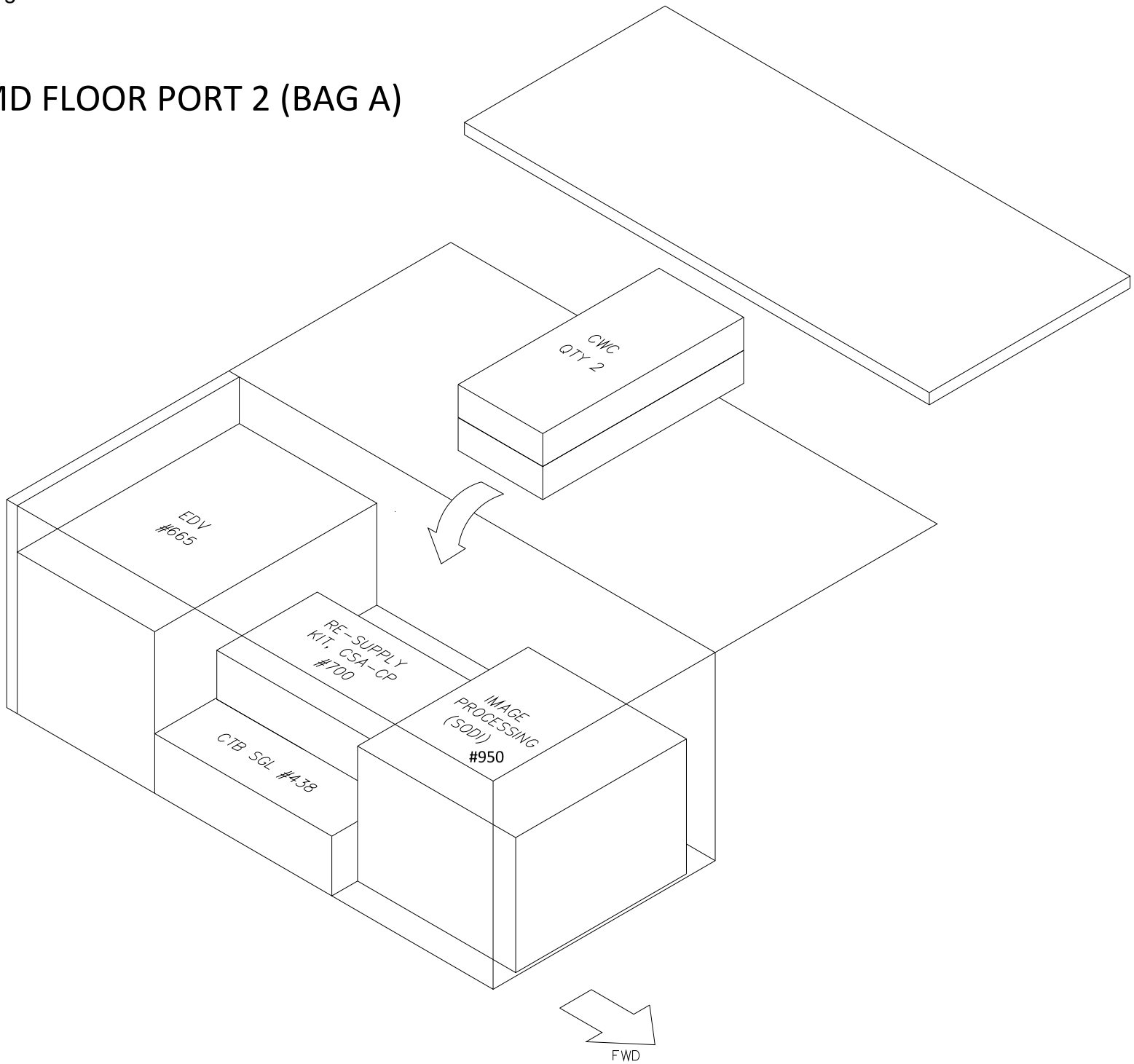

EXT A/L FLOOR (BAG I)

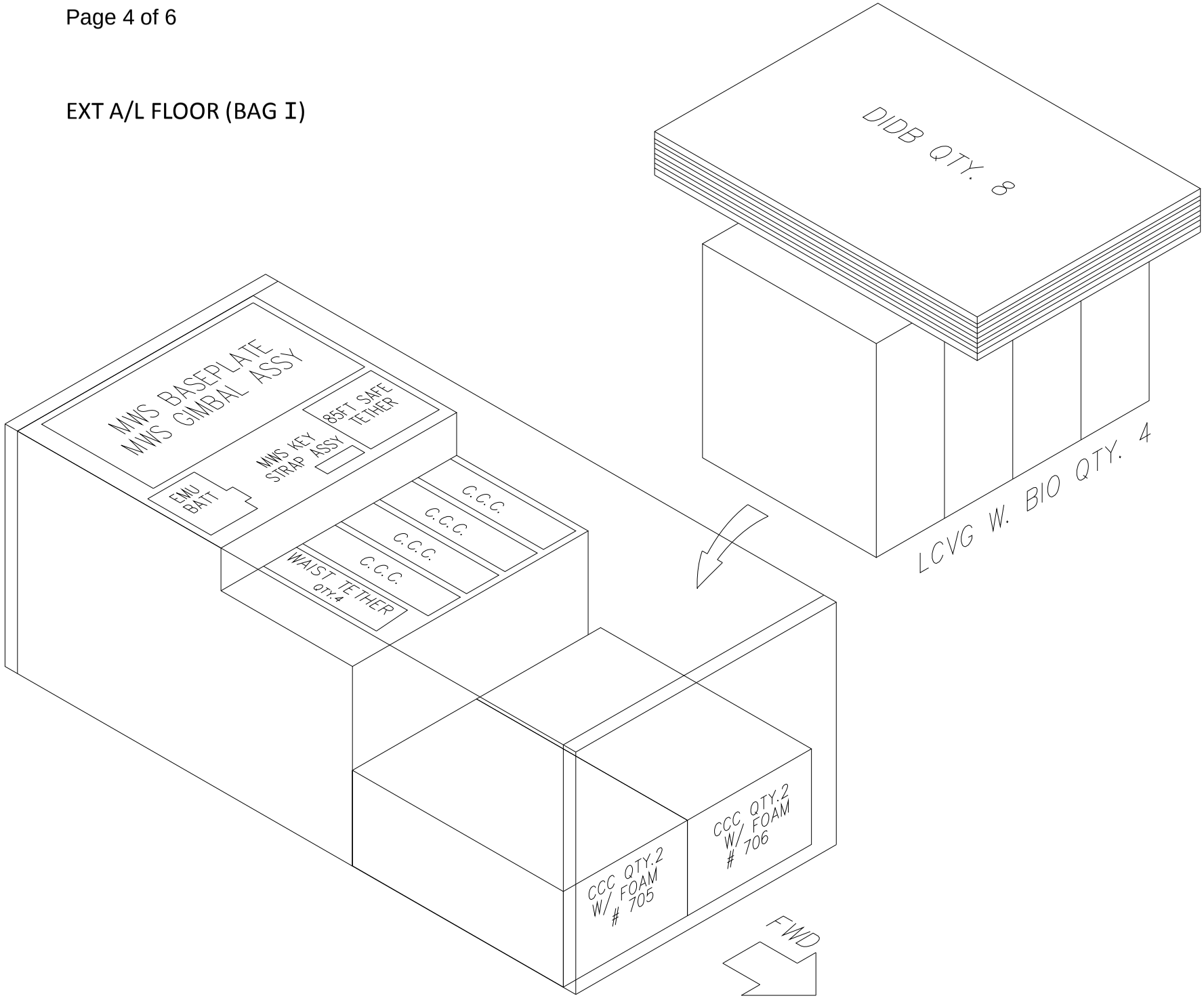

MD FLOOR STBD 1 (BAG C) – Catalytic Reactor ORU Stowage Instructions:

The following pages contain the instructions for the return stowage configuration of the Catalytic Reactor.

1. Please remove the foam labeled “CCC/Food container” and place this foam into either end of Bag A (RFTA).
2. Once you have retrieved the Catalytic Reactor foam box (Return Item 721) place the ORU in the box as shown below:

3. Please place foam pieces in the four side voids, indicated by the arrows (above).

Catalytic Stowage Instructions (Continued):

3. Use the “loose piece” of minicell (white) foam (1) located in Bag C to replace the lost foam lid.

4. Place ORU/foam configuration in Bag C (as shown on pictorial)

5. Place final foam piece (2) on top of bag
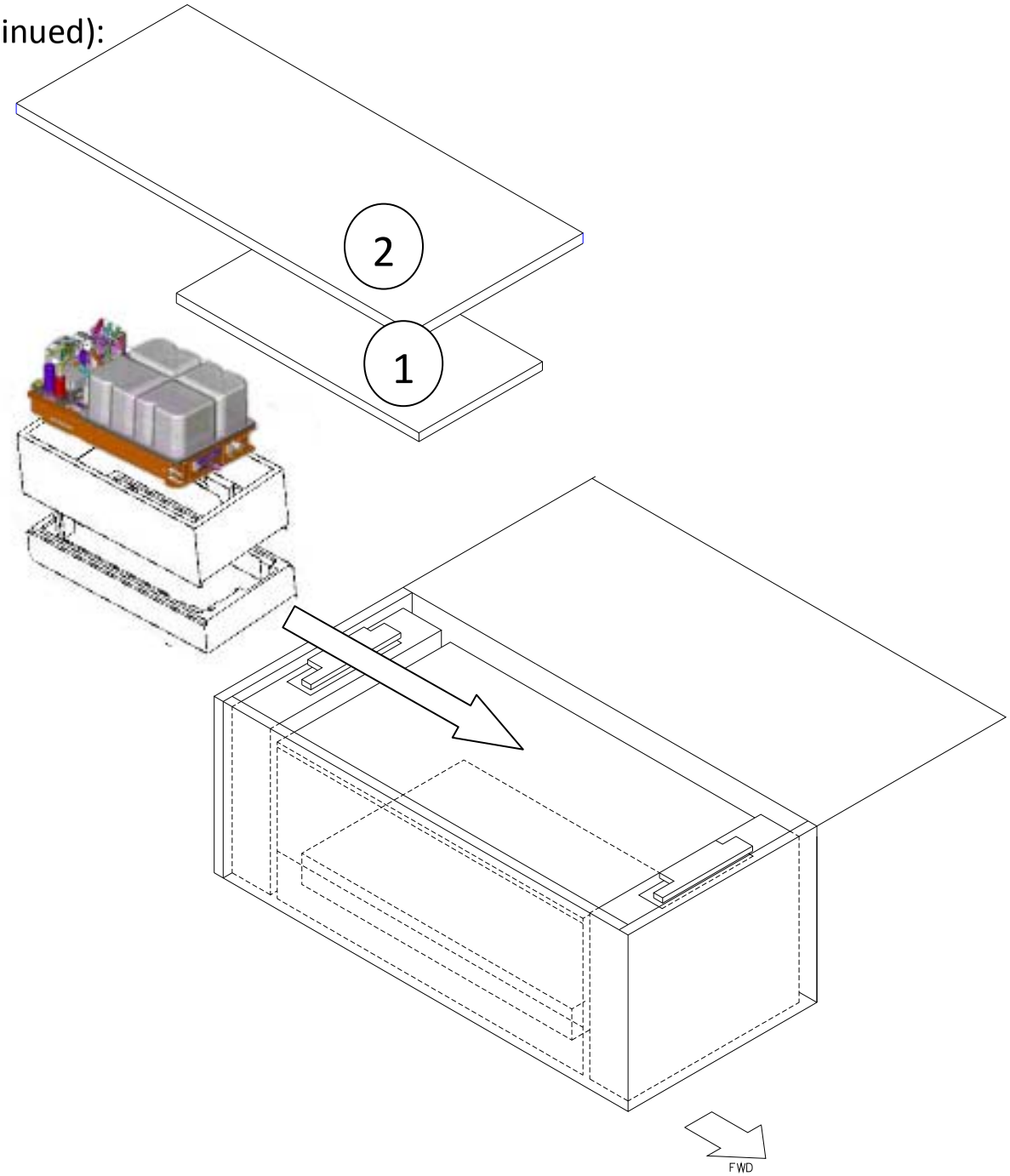
6. Report completion of plan.