STS-130 / 20A

FD 07 Execute Package

MSG	Page(s)	Title
077B	1 - 13	FD07 Flight Plan Revision
078A	14 - 15	FD07 Mission Summary
079A	---	Daily Summary (Electronic Only)
080	16 - 24	FD07 Transfer Message
081	25 - 36	Stowage Locations for FD07 (GMT 045)
082	---	IMMT Results - 2/13/10 (Electronic Only)
083	37 - 43	Return Bag Layouts
084	44	FD07 Crew Choice Downlink

Approved by FAO:
L. Knowlton

Last Updated: Feb 13 2010 8:49 PM GMT
JEDI *(**J**oint **E**xecute package **D**evelopment and **I**ntegration), v3.0*

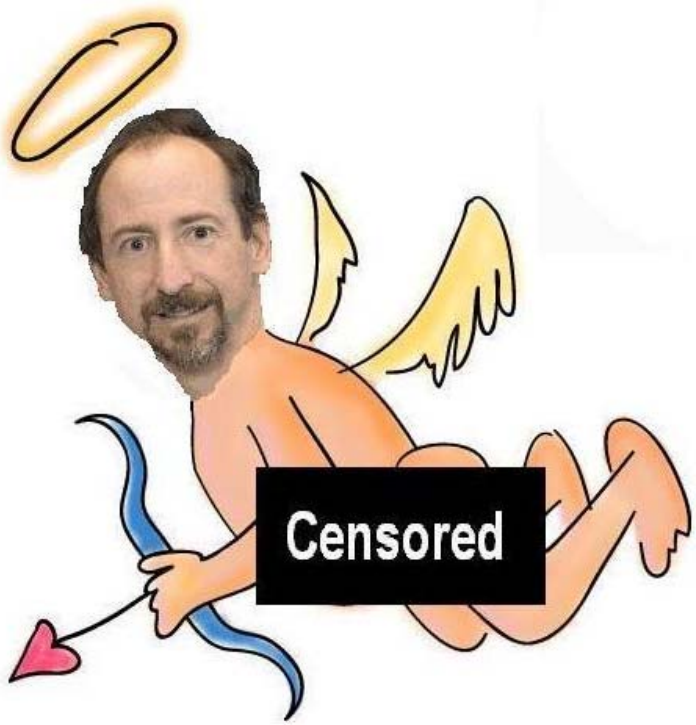

I am Richard LaBrode and I approved this comedy.

THIS PAGE INTENTIONALLY BLANK

MSG INDEX

MSG NO.	TITLE
MSG -077	FD07 Flight Plan Revision
MSG -078	FD07 Mission Summary
MSG -079	Daily Summary
MSG -080	FD07 Transfer Message
MSG -081	Stowage Locations for FD07 (GMT 045)
MSG -082	IMMT Results - 2/13/10
MSG -083	Return Bag Layouts
MSG -084	FD07 Crew Choice Downlink

1. Post-Sleep Cryo Config

For today's Post-Sleep cryo config, O2 tanks 2, 3, & 4 and H2 tanks 2 and 4 will be active.

R1 O2,H2 MANF VLV TK2 (two) - OP (tb-OP)
O2 TK3 HTR A - AUTO

A11 CRYO TK4 HTR O2 A - AUTO

A15 CRYO TK5 HTR O2 A - OFF

Pre-Sleep Cryo Config

√MCC for deltas prior to configuring for Pre-Sleep.

For tonight's Pre-Sleep cryo config, Manifold 2 will be closed with O2 tanks 2 and 5 and H2 tanks 2 and 4 active.

A15 CRYO TK5 HTR O2 A - AUTO

A11 CRYO TK4 HTR O2 A - OFF

R1 O2 TK3 HTR A - OFF
O2,H2 MANF VLV TK2 (two) - CL (tb-CL)

2. Mid-Day LiOH Changeout
There is a mid-day LiOH changeout on your cue card for today. MCC will notify you when you should perform this changeout. If ppCO2 continues to track predicts, it will not be required. Regardless, the pre-sleep changeout will occur per the cue card (can 15 in position A).

3. MSG 085 Node 3 Port Center Disk Cover Troubleshooting
The procedure is still in work. Expect a real-time call when the message is onboard.

4. REPLACE PAGES 2-22 THROUGH 2-25 and 3-68 THROUGH 3-75.

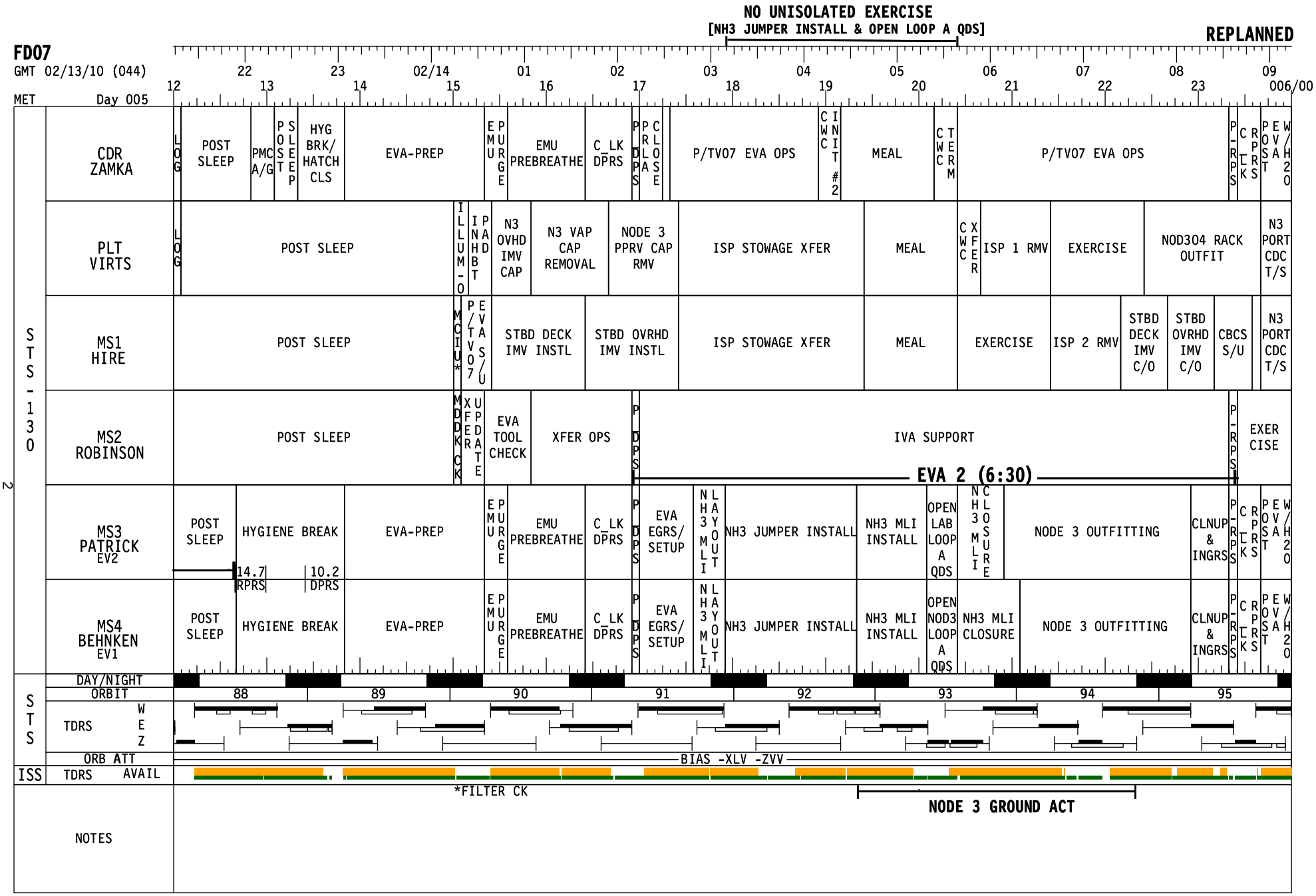
NO UNISOLATED EXERCISE
[NH3 JUMPER INSTALL & OPEN LOOP A QDS]
REPLANNED
FD07
GMT 02/13/10 (044)
MET Day 005
22 23 02/14 01 02 03 04 05 06 07 08 09
12 13 14 15 16 17 18 19 20 21 22 23 006/00
STS-130
CDR ZAMKA
LOG
POST SLEEP
PMC A/G
POST SLEEP
HYG BRK/ HATCH CLS
EVA-PREP
EMU PURGE
EMU PREBREATHE
C_LK DPRS
PDPS
PRLA CLOSE
P/TV07 EVA OPS
CWC INIT #2
MEAL
CWC TERM
P/TV07 EVA OPS
P-RPS
C_LK RPRS
POST EVA W/H2O
PLT VIRTS
LOG
POST SLEEP
ILLUM-O
INHBT PAD
N3 OVHD IMV CAP
N3 VAP CAP REMOVAL
NODE 3 PPRV CAP RMV
ISP STOWAGE XFER
MEAL
CWC XFER
ISP 1 RMV
EXERCISE
NOD304 RACK OUTFIT
N3 PORT CDC T/S
MS1 HIRE
POST SLEEP
MCIU*
P/TV07 EVA S/U
STBD DECK IMV INSTL
STBD OVRHD IMV INSTL
ISP STOWAGE XFER
MEAL
EXERCISE
ISP 2 RMV
STBD DECK IMV C/O
STBD OVRHD IMV C/O
CBCS S/U
N3 PORT CDC T/S
MS2 ROBINSON
POST SLEEP
MDDK CK
XFER UPDATE
EVA TOOL CHECK
XFER OPS
PDPS
IVA SUPPORT
P-RPS
EXER CISE
EVA 2 (6:30)
MS3 PATRICK EV2
POST SLEEP
HYGIENE BREAK
14.7 RPRS
10.2 DPRS
EVA-PREP
EMU PURGE
EMU PREBREATHE
C_LK DPRS
PDPS
EVA EGRS/ SETUP
NH3 MLI LAYOUT
NH3 JUMPER INSTALL
NH3 MLI INSTALL
OPEN LAB LOOP A QDS
NH3 MLI CLOSURE
NODE 3 OUTFITTING
CLNUP & INGRS
P-RPS
C_LK RPRS
POST EVA W/H2O
MS4 BEHNKEN EV1
POST SLEEP
HYGIENE BREAK
EVA-PREP
EMU PURGE
EMU PREBREATHE
C_LK DPRS
PDPS
EVA EGRS/ SETUP
NH3 MLI LAYOUT
NH3 JUMPER INSTALL
NH3 MLI INSTALL
OPEN NOD3 LOOP A QDS
NH3 MLI CLOSURE
NODE 3 OUTFITTING
CLNUP & INGRS
P-RPS
C_LK RPRS
POST EVA W/H2O
STS
DAY/NIGHT
ORBIT
88 89 90 91 92 93 94 95
TDRS W E Z
ORB ATT
BIAS -XLV -ZVV
ISS
TDRS AVAIL
*FILTER CK
NODE 3 GROUND ACT
NOTES

2

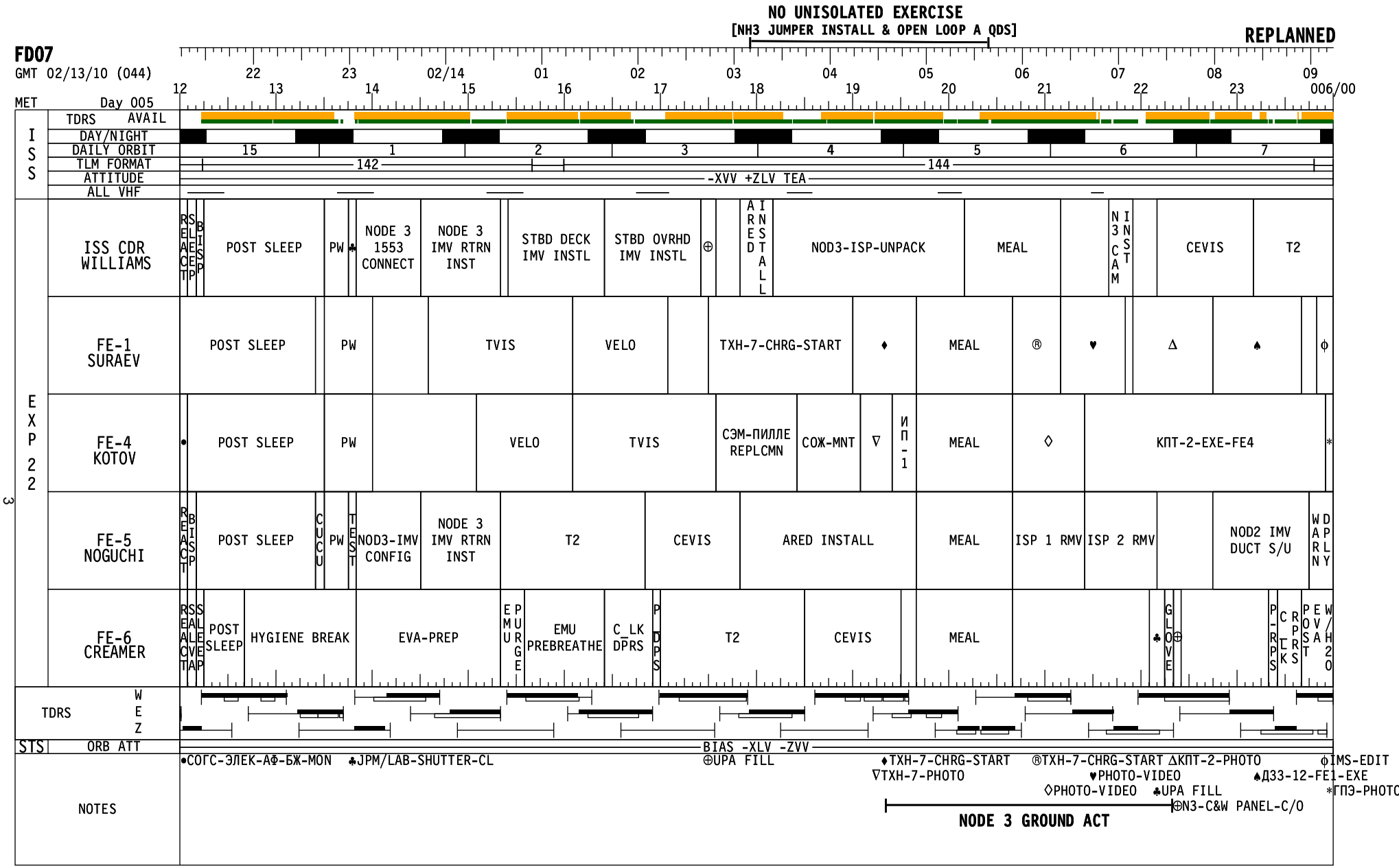
NO UNISOLATED EXERCISE
[NH3 JUMPER INSTALL & OPEN LOOP A QDS]
REPLANNED
FD07
GMT 02/13/10 (044)
22 23 02/14 01 02 03 04 05 06 07 08 09
12 13 14 15 16 17 18 19 20 21 22 23 006/00
MET Day 005
ISS
TDRS AVAIL
DAY/NIGHT
DAILY ORBIT 15 1 2 3 4 5 6 7
TLM FORMAT 142 144
ATTITUDE -XVV +ZLV TEA
ALL VHF
EXP 22
ISS CDR WILLIAMS
REACT
SLEEP
BISP
POST SLEEP
PW
♣
NODE 3 1553 CONNECT
NODE 3 IMV RTRN INST
STBD DECK IMV INSTL
STBD OVRHD IMV INSTL
⊕
ARED INSTALL
NOD3-ISP-UNPACK
MEAL
N3 CAM INST
CEVIS
T2
FE-1 SURAEV
POST SLEEP
PW
TVIS
VELO
TXH-7-CHRG-START
♦
MEAL
®
♥
Δ
♠
ϕ
FE-4 KOTOV
•
POST SLEEP
PW
VELO
TVIS
СЭМ-ПИЛЛЕ REPLCMN
СОЖ-MNT
∇
ИП-1
MEAL
◊
КПТ-2-EXE-FE4
*
FE-5 NOGUCHI
REACT
BISP
POST SLEEP
CUCU
PW
TEST
NOD3-IMV CONFIG
NODE 3 IMV RTRN INST
T2
CEVIS
ARED INSTALL
MEAL
ISP 1 RMV
ISP 2 RMV
NOD2 IMV DUCT S/U
WARN DPLY
FE-6 CREAMER
REACT
SALVEA
SLEEP
POST SLEEP
HYGIENE BREAK
EVA-PREP
EMU PURGE
EMU PREBREATHE
C_LK DPRS
PDPS
T2
CEVIS
MEAL
♣
GLOVE
⊕
P-RPS
C_LK
RPRS
POST
EVA
W/H2O
TDRS
W
E
Z
STS
ORB ATT
BIAS -XLV -ZVV
NOTES
•СОГС-ЭЛЕК-АФ-БЖ-MON
♣JPM/LAB-SHUTTER-CL
⊕UPA FILL
♦TXH-7-CHRG-START
∇TXH-7-PHOTO
®TXH-7-CHRG-START
ΔКПТ-2-PHOTO
♥PHOTO-VIDEO
◊PHOTO-VIDEO
♣UPA FILL
⊕N3-C&W PANEL-C/O
ϕIMS-EDIT
♠Д33-12-FE1-EXE
*ГПЭ-PHOTO
NODE 3 GROUND ACT

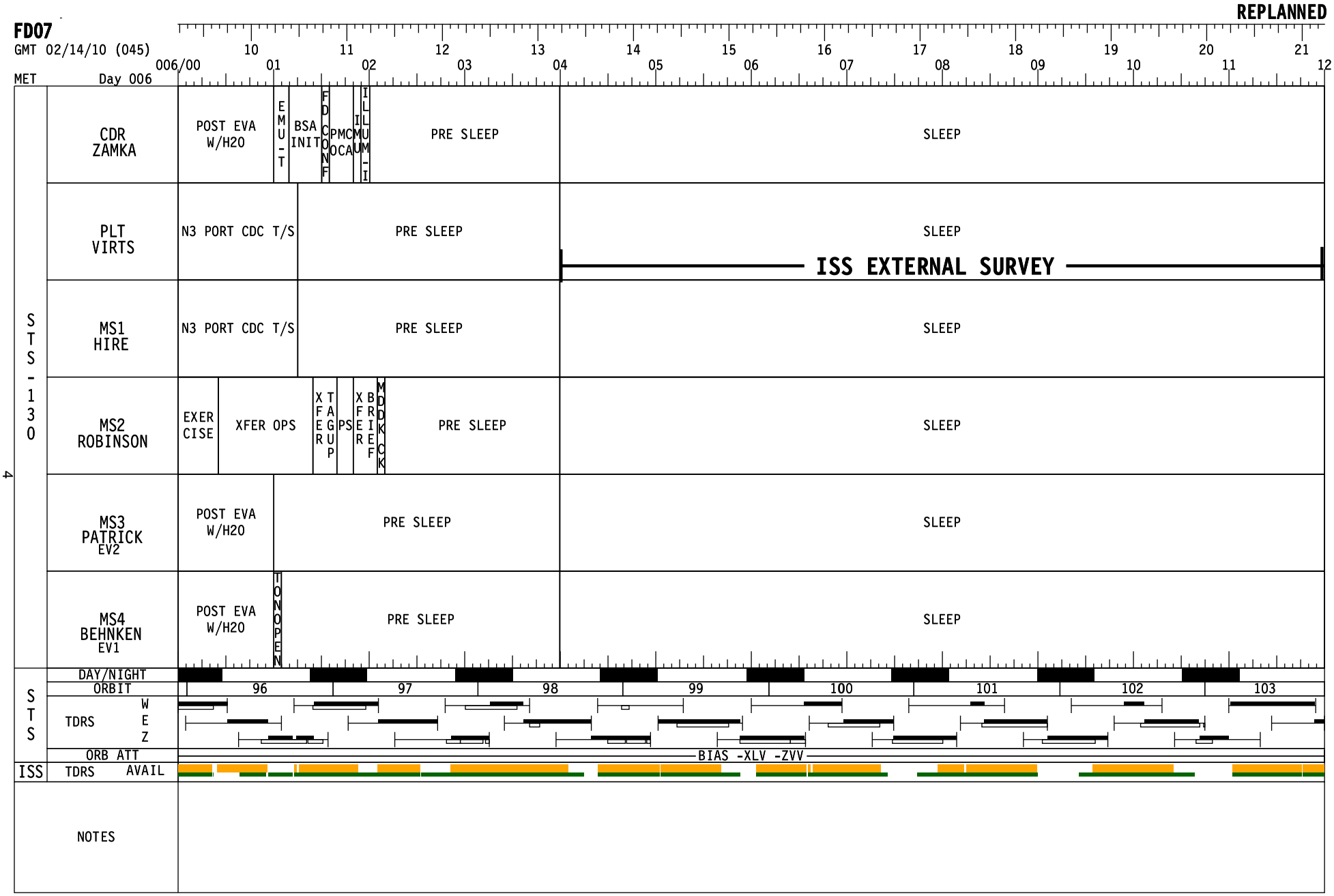
REPLANNED
FD07
GMT 02/14/10 (045)
MET Day 006
006/00 01 02 03 04 05 06 07 08 09 10 11 12
10 11 12 13 14 15 16 17 18 19 20 21
STS-130
CDR ZAMKA
POST EVA W/H2O
EMU-T
BSA INIT
FDCONF
PMC OCA
ILUM-I
PRE SLEEP
SLEEP
PLT VIRTS
N3 PORT CDC T/S
PRE SLEEP
SLEEP
ISS EXTERNAL SURVEY
MS1 HIRE
N3 PORT CDC T/S
PRE SLEEP
SLEEP
MS2 ROBINSON
EXER CISE
XFER OPS
XFER
TAGUP
PS
XFER
BREF
MDOCK
PRE SLEEP
SLEEP
MS3 PATRICK EV2
POST EVA W/H2O
PRE SLEEP
SLEEP
MS4 BEHNKEN EV1
POST EVA W/H2O
TONOPEN
PRE SLEEP
SLEEP
DAY/NIGHT
ORBIT
96 97 98 99 100 101 102 103
STS
TDRS W E Z
ORB ATT
BIAS -XLV -ZVV
ISS
TDRS AVAIL
NOTES

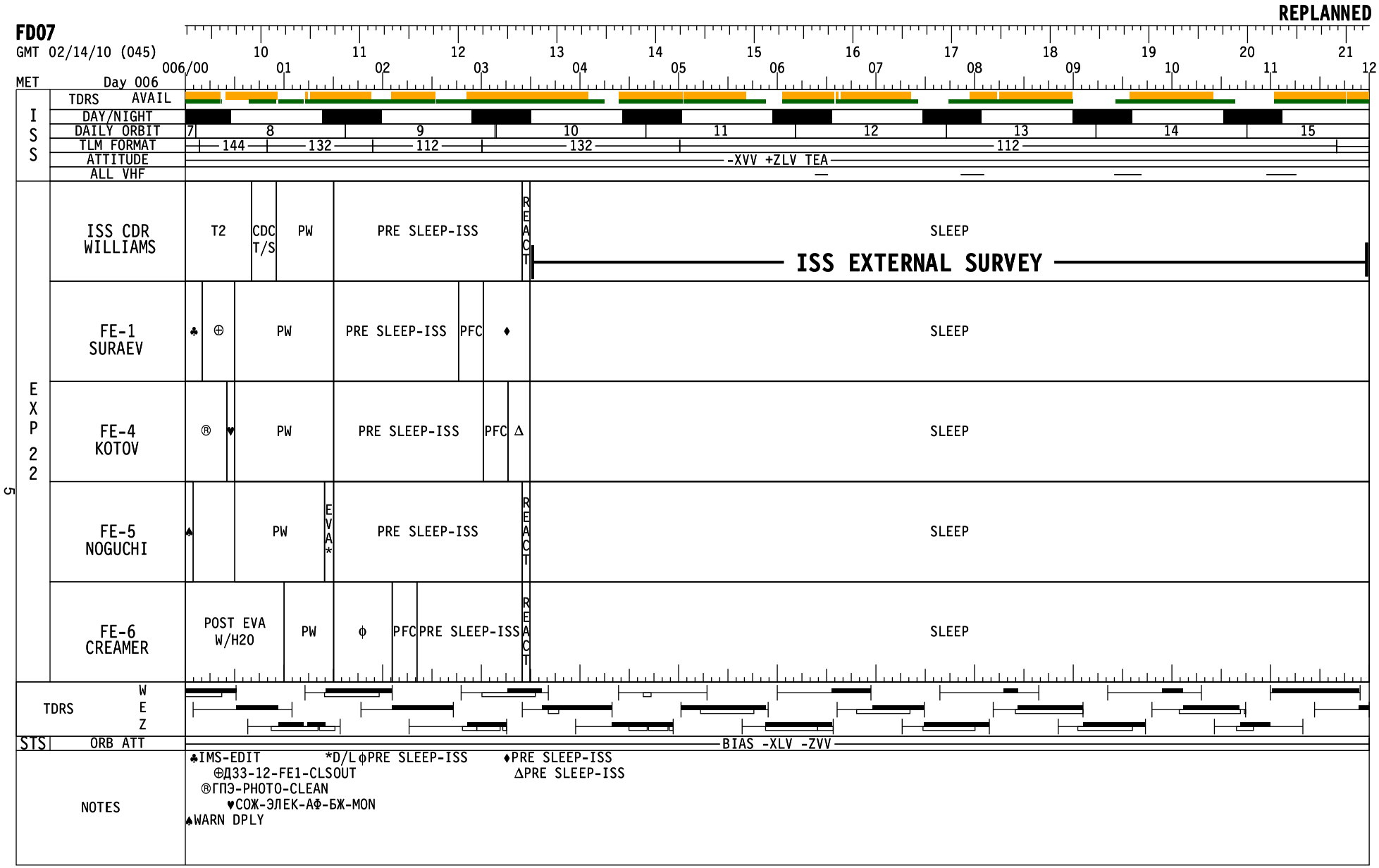
REPLANNED
FD07
GMT 02/14/10 (045)
MET Day 006
006/00 10 01 11 02 12 03 13 04 14 05 15 06 16 07 17 08 18 09 19 10 20 11 21 12
ISS
TDRS AVAIL
DAY/NIGHT
DAILY ORBIT 7 8 9 10 11 12 13 14 15
TLM FORMAT 144 132 112 132 112
ATTITUDE -XVV +ZLV TEA
ALL VHF
EXP 22
ISS CDR WILLIAMS
T2
CDC T/S
PW
PRE SLEEP-ISS
REACT
SLEEP
ISS EXTERNAL SURVEY
FE-1 SURAEV
PW
PRE SLEEP-ISS
PFC
SLEEP
FE-4 KOTOV
PW
PRE SLEEP-ISS
PFC
SLEEP
FE-5 NOGUCHI
PW
EVA*
PRE SLEEP-ISS
REACT
SLEEP
FE-6 CREAMER
POST EVA W/H2O
PW
PFC
PRE SLEEP-ISS
REACT
SLEEP
TDRS W E Z
STS ORB ATT BIAS -XLV -ZVV
NOTES
♣IMS-EDIT *D/L ϕPRE SLEEP-ISS ♦PRE SLEEP-ISS
⊕Д33-12-FE1-CLSOUT ΔPRE SLEEP-ISS
®ГПЭ-PHOTO-CLEAN
♥СОЖ-ЭЛЕК-АФ-БЖ-MON
♠WARN DPLY

5

STS-130 FD07

GMT Date 02/13 (044) | W | TDRSE | Z | D/N | ORB | MET Day 005 | STS ATT

CDR ZAMKA	PLT VIRTS	MS1 HIRE	Notes
SLEEP LOGBOOK (ORB OPS, SDBI)	SLEEP LOGBOOK (ORB OPS, SDBI)	POST-SLEEP ACTIVITY (ORB OPS, CREW SYS)	
POST-SLEEP ACTIVITY (ORB OPS, CREW SYS)	POST-SLEEP ACTIVITY (ORB OPS, CREW SYS)		
PRIVATE MEDICAL CONFERENCE L9 PAYLOAD STATION A/G (two) - OFF Perform via A/G2			
POST-SLEEP ACTIVITY (ORB OPS, CREW SYS)			
EVA SYSTEMS: 1.211 HYGIENE BREAK			
EVA SYSTEMS: 1.216 EVA PREP			
EVA SYSTEMS: 1.220 EMU PURGE	TV (ILLUMINATOR OPS) (PHOTO/TV, CC) ILLUMINATORS OFF - A & D	L17 Check MCIU filter screen	
EVA SYSTEMS: 1.225 EMU PREBREATHE	EVA 2 INHIBIT PAD (EVA, TIMELINES)	P/TV07 EVA (PHOTO/TV, SCENES) Perform SETUP	
	1.111 N3 OVHD IMV CAP INS(ASSY OPS,ACT&C/O) Steps 1.2,1.5-2,3.2-end,for Ovhd-Stbd IMV Cap. Compress foam to gain access to IMV port. If req'd,remove Insulation Bootie velcroed around QD,replace when finished.	1.118 NODE 3 STBD DECK NPRV RMVL & IMV VLV INSTL (ASSY OPS, ACT&C/O) Steps 1-5,7-end	
	1.124 NODE 3 VACUUM ACCESS PORT CAP SEAL R&R (ASSY OPS, ACT&C/O)		

FD07 EZ ACTIVITIES:
- √OCAC FILTER & MDDK DUCT SCREEN
- TEPC (STATUS CHECK) (ORB OPS, CREW SYS)
- HARD REBOOT ALL PGSCs EXCEPT: STS-6(WLES),STS-5(RPOP2),& OCA ROUTER.
- Return all Shuttle IFM tools used on ISS, per MSG 052, to Endeavour prior to sleep.

Time scale: 22:00, 23:00, 00:00, 01:00; 12:00, 13:00, 14:00, 15:00, 16:00

Orbits: 88, 89, 90

BIAS - XLV - ZVV

STS-130 FD07

GMT Date 02/13 (044) | W | TDRSE | Z | D/N | ORB | MET Day 005 | STS ATI

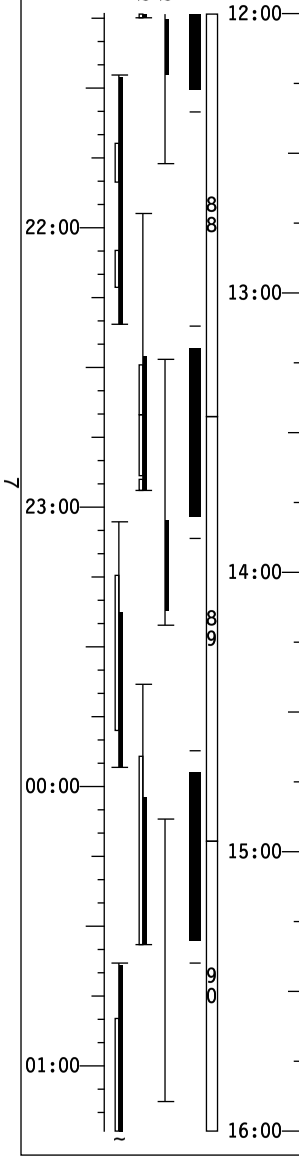

MET	MS2 ROBINSON	MS3 PATRICK	MS4 BEHNKEN	Notes
12:00	POST-SLEEP ACTIVITY (ORB OPS, CREW SYS)	POST-SLEEP ACTIVITY (ORB OPS, CREW SYS)	POST-SLEEP ACTIVITY (ORB OPS, CREW SYS)	
		EVA SYSTEMS: 1.211 HYGIENE BREAK	EVA SYSTEMS: 1.211 HYGIENE BREAK	
13:00				
		EVA SYSTEMS: 1.216 EVA PREP	EVA SYSTEMS: 1.216 EVA PREP	
14:00				
15:00	GLACIER STATUS CHECK (ASSY OPS,CC)			
	TRANSFER UPDATE Ref. Transfer List & MSG 080			
	EVA TOOL CHECK Ref. EVA 2 TOOL CONFIG (EVA, TIMELINES) Ref. MSG 066	EVA SYSTEMS: 1.220 EMU PURGE	EVA SYSTEMS: 1.220 EMU PURGE	
		EVA SYSTEMS: 1.225 EMU PREBREATHE	EVA SYSTEMS: 1.225 EMU PREBREATHE	
16:00	TRANSFER OPS Ref. Transfer List & MSG 080			

BIAS - XLV - ZVV

STS-130 FD07

GMT Date 02/14 (045) | W | TDRSE | Z | D/N | ORB | MET Day 005 | STS ATT

CDR ZAMKA	PLT VIRTS	MS1 HIRE	Notes
EVA SYSTEMS: 1.225 EMU PREBREATHE	1.124 NODE 3 VACUUM ACCESS PORT CAP SEAL R&R (ASSY OPS, ACT&C/O)	1.118 NODE 3 STBD DECK NPRV RMVL & IMV VLV INSTL (ASSY OPS, ACT&C/O) Steps 1-5,7-end	
EVA SYSTEMS: CREWLOCK DEPRESS/REPRESS (CC)	1.120 NODE 3 PPRV SAMPLE PORT CAP RMVL (ASSY OPS, ACT&C/O)	1.119 NODE 3 STBD OVHD NPRV RMVL & IMV VLV INSTL (ASSY OPS, ACT&C/O) Steps 1-5,7-end	
EVA SYSTEMS: CREWLOCK POST DEPRESS (CC)			
PRLA CLOSE (ORB OPS, PRLA)			
P/TV07 EVA (PHOTO/TV, SCENES) Perform OPS	ISP STOWAGE TRANSFER Ref. Transfer List: Procedures: ISP Stowage Transfer	ISP STOWAGE TRANSFER Ref. Transfer List: Procedures: ISP Stowage Transfer	
CWC FILL (ORB OPS, CWC OPS) Init Fill #2 Ref. MSG 027			NO UNISOLATED EXERCISE DURING NH3 JUMPER INSTALL AND OPEN LOOP A QDs
MEAL	MEAL	MEAL	

Time scale: 02:00, 03:00, 04:00, 05:00; 16:00, 17:00, 18:00, 19:00, 20:00

STS ATT: BIAS -XLV -ZVV

8

REPLANNED

STS-130 FD07

GMT Date 02/14 (045) | W | TDRSE | Z | D/N | ORB | MET Day 005 | STS ATI

MS2 ROBINSON	MS3 PATRICK	MS4 BEHNKEN	Notes
TRANSFER OPS Ref. Transfer List & MSG 080	EVA SYSTEMS: 1.225 EMU PREBREATHE	EVA SYSTEMS: 1.225 EMU PREBREATHE	
	EVA SYSTEMS: CREWLOCK DEPRESS/REPRESS (CC)	EVA SYSTEMS: CREWLOCK DEPRESS/REPRESS (CC)	
EVA SYSTEMS: CREWLOCK POST DEPRESS (CC)	EVA SYSTEMS: CREWLOCK POST DEPRESS (CC)	EVA SYSTEMS: CREWLOCK POST DEPRESS (CC)	
	EVA 2 SETUP	EVA 2 SETUP	
	NH3 MLI LAYOUT	NH3 MLI LAYOUT	
IVA SUPPORT FOR EVA	NH3 JUMPER INSTALL EXERCISE CONSTRAINT	NH3 JUMPER INSTALL EXERCISE CONSTRAINT	NO UNISOLATED EXERCISE DURING NH3 JUMPER INSTALL AND OPEN LOOP A QDs
	NH3 MLI INSTALL	NH3 MLI INSTALL	

Time scale: 02:00, 03:00, 04:00, 05:00; 16:00, 17:00, 18:00, 19:00, 20:00

Day 005: 90, 91, 92, 93

BIAS - XLV - ZVV

9

STS-130 FD07

GMT Date 02/14 (045) | W | TDRSE | Z | D/N | ORB | MET Day 005 | STS ATI

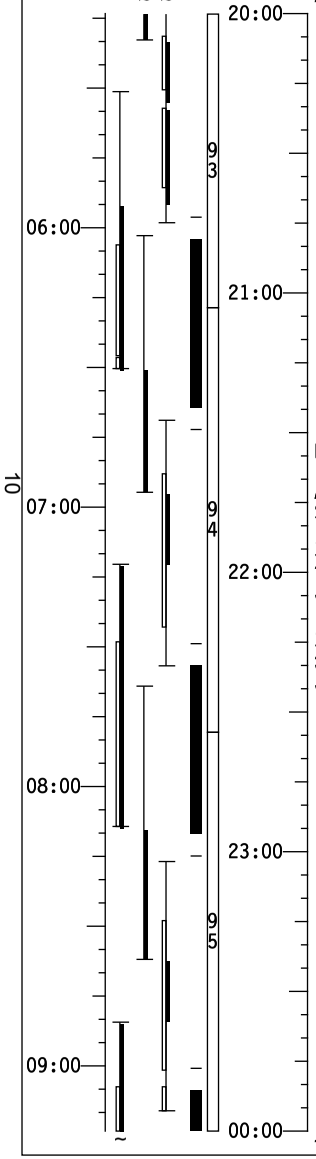

BIAS - XLV - ZVV

CDR ZAMKA

MEAL

CWC FILL (ORB OPS, CWC OPS)
Perform FILL TERMINATION

P/TV07 EVA
(PHOTO/TV, SCENES)
Perform OPS

EVA SYSTEMS: PRE REPRESS (CC)
EVA SYSTEMS: CREWLOCK DEPRESS/REPRESS (CC)

EVA SYSTEMS: 1.240 POST EVA
Perform Water Recharge, No Metox Regen

Ref. STS-130 Consumables Tracking CC(EVA)
Ref. STS-130 Battery Recharge Plan (EVA)

PLT VIRTS

MEAL

CWC TRANSFER
Transfer CWC to ISS

S&M: 1.248 INTEGRATED STOWAGE PLATFORM (ISP) REMOVAL
Perform for NOD3D5 location.
Stow ISP at NOD3F5 location.
(ISP Stowage Straps, Adjustable Bungee)

EXERCISE

1.144 NODE 3 AVIONICS RACKS OUTFITTING
(ASSY OPS, ACT&C/O)
Perform for NOD304 only.

NODE 3 PORT CENTER DISC COVER TROUBLESHOOTING
Ref. MSG 085

MS1 HIRE

MEAL

EXERCISE

S&M: 1.248 INTEGRATED STOWAGE PLATFORM (ISP) REMOVAL
Perform for NOD3D4 location.
Stow ISP at NOD3F5 location.
(ISP Stowage Straps, Adjustable Bungee)

1.118 NODE 3 STBD DECK NPRV RMVL & IMV VLV INSTL
(ASSY OPS, ACT&C/O)
Step 6

1.119 NODE 3 STBD OVHD NPRV RMVL & IMV VLV INSTL
(ASSY OPS, ACT&C/O)
Step 6

1.178 20A CBCS INSTL/RMVL-CUPOLA INSTL
(ASSY OPS, ACT&C/O) Steps 1-5

NODE 3 PORT CENTER DISC COVER TROUBLESHOOTING
Ref. MSG 085

Notes

NO UNISOLATED EXERCISE DURING NH3 JUMPER INSTALL AND OPEN LOOP A QDs

STS-130 FD07

GMT Date 02/14 (045) | W | TDRSE | Z | D/N | ORB | MET Day 005 | STS ATI

06:00 07:00 08:00 09:00

93 94 95

20:00 21:00 22:00 23:00 00:00

BIAS - XLV - ZVV

MS2 ROBINSON	MS3 PATRICK	MS4 BEHNKEN	Notes
	NH3 MLI INSTALL	NH3 MLI INSTALL	NO UNISOLATED EXERCISE DURING NH3 JUMPER INSTALL AND OPEN LOOP A QDs
	OPEN LAB LOOP A QDS EXERCISE CONSTRAINT	OPEN LAB LOOP A QDS EXERCISE CONSTRAINT	
	NH3 MLI CLOSURE	NH3 MLI CLOSURE	
IVA SUPPORT FOR EVA	NODE 3 OUTFITTING	NODE 3 OUTFITTING	
	EVA CLEANUP & INGRESS	EVA CLEANUP & INGRESS	
EVA SYSTEMS: PRE REPRESS (CC)	EVA SYSTEMS: PRE REPRESS (CC)	EVA SYSTEMS: PRE REPRESS (CC)	
	EVA SYSTEMS: CREWLOCK DEPRESS/REPRESS (CC)	EVA SYSTEMS: CREWLOCK DEPRESS/REPRESS (CC)	
EXERCISE	EVA SYSTEMS: 1.240 POST EVA Perform Water Recharge, No Metox Regen Ref. STS-130 Consumables Tracking CC(EVA) Ref. STS-130 Battery Recharge Plan (EVA)	EVA SYSTEMS: 1.240 POST EVA Perform Water Recharge, No Metox Regen Ref. STS-130 Consumables Tracking CC(EVA) Ref. STS-130 Battery Recharge Plan (EVA)	

11

STS-130 FD07

GMT Date 02/14 (045) | W | TDRSE | Z | D/N | ORB | MET Day 006 | STS ATT | CDR ZAMKA | PLT VIRTS | MS1 HIRE | Notes

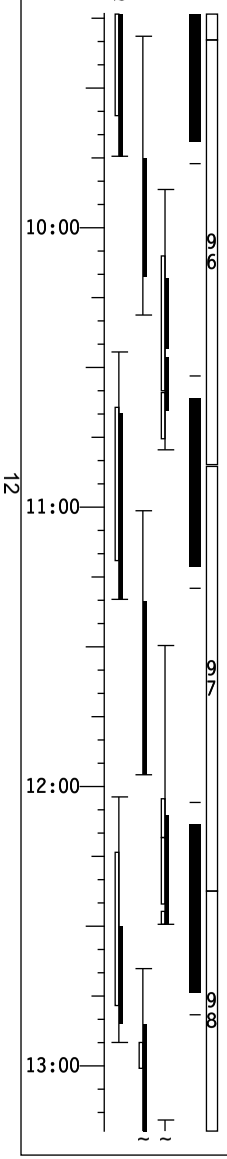

00:00

EVA SYSTEMS: 1.240 POST EVA
Perform Water Recharge, No Metox Regen

Ref. STS-130 Consumables Tracking CC(EVA)
Ref. STS-130 Battery Recharge Plan (EVA)

NODE 3 PORT CENTER DISC COVER TROUBLESHOOTING
Ref. MSG 085

NODE 3 PORT CENTER DISC COVER TROUBLESHOOTING
Ref. MSG 085

01:00

EVA SYSTEMS: 1.605 BSA BATTERY RECHARGE
TERMINATE A

EVA SYSTEMS: 1.605 BSA BATTERY RECHARGE
INITIATE A

PRE-SLEEP ACTIVITY
(ORB OPS, CREW SYS)

PRE-SLEEP ACTIVITY
(ORB OPS, CREW SYS)

FLIGHT DIRECTOR CONFERENCE

PRIVATE MEDICAL CONFERENCE B

BIAS-XLV-ZVV

IMU STAR OF OPPTY ALIGN (ORB OPS, GNC)
TV(ILLUM OPS)(PHOTO/TV,CC)ILLUM ON - A & D
PRE-SLEEP ACTIVITY
(ORB OPS, CREW SYS)

02:00

A Ref. STS-130 Consumables Tracking CC(EVA)
Ref. STS-130 Battery Recharge Plan (EVA)

B L9 PAYLOAD STATION AUDIO A/G (two) - OFF
NETMEETING VIDEO CONFERENCING
(ORB OPS, PGSC)
Omit steps 1.2 and 3,
use A/G 2 for audio.
Inform MCC which PGSC will be used.
KU TDRW (01:26-01:57)

03:00

04:00

CREW WAKE AT 06/12:00

12

STS-130 FD07

GMT Date 02/14 (045) | W | TDRSE | Z | D/N | ORB | MET Day 006 | STS ATI

MS2 ROBINSON

EXERCISE

TRANSFER OPS
Ref. Transfer List & MSG 080

TRANSFER TAGUP
Coordinate with transfer counterpart

PRE-SLEEP ACTIVITY
(ORB OPS, CREW SYS)

TRANSFER BRIEF Call down status to MCC

GLACIER STATUS CHECK (ASSY OPS,CC)

PRE-SLEEP ACTIVITY
(ORB OPS, CREW SYS)

BIAS-XLV-ZVV

MS3 PATRICK

EVA SYSTEMS: 1.240 POST EVA
Perform Water Recharge, No Metox Regen

Ref. STS-130 Consumables Tracking CC(EVA)
Ref. STS-130 Battery Recharge Plan (EVA)

PRE-SLEEP ACTIVITY
(ORB OPS, CREW SYS)

MS4 BEHNKEN

EVA SYSTEMS: 1.240 POST EVA
Perform Water Recharge, No Metox Regen

Ref. STS-130 Consumables Tracking CC(EVA)
Ref. STS-130 Battery Recharge Plan (EVA)

TONOPEN - Locker: MF57G

PRE-SLEEP ACTIVITY
(ORB OPS, CREW SYS)

Notes

10:00 11:00 12:00 13:00

96 97 98

00:00 01:00 02:00 03:00 04:00

CREW WAKE AT 06/12:00

Good Morning Endeavour!!!!

Good news! You have been offically extended by a day to support regen rack activities!!!!

Great job doing the real time EMU configurations for today!

Great job starting the move into the ISS new quarters! You did an excellent job working the moving in issues that cropped up! It is a pleasure working with all of you!

A change for today's timeline is that the cupola depress will not happen today. Troubleshooting time has been scheduled instead of the depress activities, and depress will be deferred to another day. Cupola grapple has also been deferred. Thanks in advance, for being so flexible!!!!

Have a great EVA day!!!

YOUR CURRENT ORBIT IS: 188 X 182 NM

NOTAMS: NO CHANGE

EDW -	TEMP RWY IN USE. PERM RWY CLOSED FOR CONSTRUCTION.
EDW -	LAKEBED RWYS RED.
NOR -	LAKEBED RWYS USABLE. DRYING OUT.
WAL-	CLOSED.
ZZA -	ARRESTING NET INSTALLED 40M FROM END OF RWY 30L.
ESN -	RWY 03R/21L CLOSED. 03L/21R USABLE.
GUA -	RWY 06L/24R RWY END LIGHTS OUT OF SERVICE.
PTN -	CLOSED FOR RUNWAY CONSTRUCTION.
IKF -	NOT USABLE. NO AGREEMENT.
BEN -	NOT RECOMMENDED/NOT SUPPORTED.

NEXT 2 PLS OPPORTUNITIES:

KSC33	ORB 93 – 5/20:22	SKC	7	320/8P13
EDT22R	ORB 110 – 6/22:15	FEW180	7	300/4P6

OMS TANK FAIL CAPABILITY:

L OMS FAILS: NO
R OMS FAILS: NO

LEAKING OMS PRPLT BURN:

L OMS LEAK: ALWAYS BURN RETROGRADE
R OMS LEAK: ALWAYS BURN RETROGRADE

OMS QUANTITIES(%)

L OMS OX = 30.2 R OMS OX = 31.4
FU = 29.9 FU = 31.2

Subtract interconnect counter for current OMS quantities.

DELTA V AVAILABLE:

OMS	320 FPS
ARCS (TOTAL ABOVE QTY1)	44 FPS
TOTAL IN THE AFT	364 FPS
ARCS (TOTAL ABOVE QTY2)	78 FPS
FRCS (ABOVE QTY 1)	32 FPS
AFT QTY 1	82 %
AFT QTY 2	44 %

THERE ARE NO FAILURE/IMPACT/WORK AROUNDS FOR TODAY.

Good morning Kay, Terry, & Steve,

You are still ahead of schedule on transfer overall, and now 53 percent complete! For today, there is an hour of XFER OPS on Steve. This time can be used to transfer items as desired from the Return List. Also, we have uplinked your return location sort pages today to assist you with organizing your return items.

Terry : We appreciate your diligent work on the LiOH transfer procedure yesterday and wanted to let you know that, if desired, you can make blue sock puppets with the extra LiOH socks you have on shuttle. EECOMs are assessing the impact of the change you called down and we may follow up on a later day with additional LiOH ops. We also saw your crew note about allowing more time, using a jettison stowage bag, and recommending stowing LiOH in the LiOH box without socks. It looked like you had more feedback but the crew note was cut off. If there is something else you wanted to pass on, please let us know. These are helpful suggestions that we will incorporate into future ops.

Kay &Terry: We know you will be hard at work on the ISP Stowage Transfer procedure – just call if you have any questions. We do have one redline for the procedure which is outlined below (the CGSE valve unit should stay in its foam box for stowage on ISS). Also a change from what is directed in your procedure – **Please DO NOT remove any yellow CTB labels on your ISP work.** Based on a calldown we received from Jeff yesterday, he prefers the yellow tags to remain on all bags from shuttle. When the procedure asks you to relabel a bag, you can use the other side of the yellow card.

The Transfer List Excel file, FD07_Transfer_List_STS130.xls, is located on the KFX machine in **C:\OCA-up\transfer** (and available via the **PGSC homepage**).

For ISS, the Transfer List Excel file, FD07_Transfer_List_STS130.xls, is located in **K:\OCA-up\transfer**.

<u>Change Pages</u>
Please incorporate changes as follows:

In the Transfer List **RESUPPLY** tab
- Pen and Ink the following page:
  - Resupply – 7:
    - For item 29: in the notes field, change “FD06” to “FD08”

In the Transfer List **RETURN** tab
- Pen and Ink the following page:
  - Return – 3:
    - For item 706: in the notes field, change “FD06” to “FD08”
- Replace the following pages:
  - Return – 4, 5, 6

In the Transfer List **RETURN LOCATION SORT** tab
- Add the following pages:
  - Return Sort – 1, 2, 3

In the Transfer List **PROCEDURES** tab

Pen and Ink the following page:

Procedures – 1; Step 1a:

a. Remove foam box labeled "CGSE Vlv Unit" from ~~foam box inside~~ CTB and stow at JPM1A7 rack front. ~~Leave foam in 3.0 CTB.~~

Question for Kay

1. Yesterday, Jeff delivered a CTB for you as item 719, which should now be stowed in MF57O. Please check the CTB and let us know its serial number during the Transfer Brief tonight so we can make sure the ISS stowage database gets updated.

FD07 Choreography

- Terry & Kay: Relocate D4 and D5 ISP CTBs per ISP STOWAGE TRANSFER activity (Items 41, 42, 43, 45, 46, 47, 49, 49.1, and 50)
- XFER OPS:
  - Continue return transfers

Have a great day!

- The 20A Transfer Team

20A Transfer Choreography

FD08

- Creamer: Transfer Node 3 ITCS sample per N3-LTL-ITCS-SAMPLE activity (Item 740)
- Behnken & Williams: Transfer cold samples from ISS MELFI to shuttle Glacier per MLF GLCR 20A SMP XFR activity (Item 721)
- Patrick: Transfer CGBAs per CGBA UNIT SWAP activity (Items 29 and 706)
- XFER OPS:
  - Continue return transfers

FD09 (no xfer brief)

- Virts: Return old C&W panel per C&W PANEL COVER DEPLOY activity (Item 705)

FD10

- XFER OPS:
  - Transfer returning RFTA to shuttle after Soichi's WRS-RFTA-R&R activity (Item 732)
  - After EVA3 A/L egress, transfer CSA-O2s (Items 707 and 708)

FD11

- Williams: Transfer returning blood sample per BLD STW activity (Item 704)
- Creamer: Transfer returning saliva sample per SLV STW activity (Item 728)
- Robinson: Transfer AFD PCS per AFT PCS XFER activity (Item 39)
- Robinson: Transfer SSC back to ISS during SSC RETURN activity (Item 804)
- Behnken: Transfer SAFER to shuttle per SAFER XFER activity (Item 714)
- Patrick & Behnken: Transfer EVA items to shuttle per EVA RECONFIG & XFER activity (Items 702, 712, 713, and 715)
- Noguchi: Transfer returning RAMs to shuttle per RAM INSTALL activity (Item 726)
- Noguchi: Transfer DCBs to shuttle per DCB-TRANSFER activity (Item 709 and 710)
- XFER OPS:
    - Complete water hardware transfers (Items 24, 25, and 729)
    - Transfer Return to Houston Imagery ziplock (Item 727)
    - Transfer remaining 5 MLE bags (Items 408 and 701)

5 MLE Bag Plan (9 total)

- Bags B & H: to Columbus for temp stow (as needed)
- Bag F: to Columbus permanently (return prepacked 5 MLE in its place FD11)
- Bags C, D & E: remain on shuttle for unpacking/repacking
- Bag A: contains UPA DA, temp stow in JEM for FD04
- Bags G & I: handled via EVA procedures (G will be temp stowed in Node 1)

CHNG	☑	FD	Initials	Item #	Item Name	Qty	Initial Stowage	Temp Stowage	Stowage at Undock	Wt (lbs)	ACTIVITY / **Constraints** / **Comments
X				707	CSA-O2 [s/n 1046]	1	ISS A/L		MF57O (in CTB)	1.40	**Transfer after EVA3 A/L egress.** **Wrap CSA-O2 in towel or bubble wrap.** **Verify serial number is 1046.**
X				708	CSA-O2 [s/n 1063]	1	ISS A/L		MF57O (in CTB)	1.40	**Transfer after EVA3 A/L egress.** **Wrap CSA-O2 in towel or bubble wrap.** **Verify serial number is 1063.**
				709	Double Coldbag [s/n 1004]	1	ISS deployed		MF43C	52.20	**Transfer on FD11 per DCB XFER activity.**
				710	Double Coldbag [s/n 1006]	1	ISS deployed		MF71C	49.40	**Transfer on FD11 per DCB XFER activity.**
				711	EDV [lid # 897, body # 418]	1	SM		Shuttle A/L (in Bag D)	58.40	**Don PPE - Tox 2 fluid contained in EDV. Use bubble wrap to cover metal protrusions on lid. Place into Hefty bag, tie, and grey tape.**
				712	EMU [S/N 3004, Be]	1		ISS A/L	Shuttle	292.30	**Transfer on FD11 per EVA RECONFIG & XFER activity.** **Reference resupply item #34.
				713	EMU [S/N 3018, Pk]	1	ISS A/L		Shuttle	299.60	**Transfer on FD11 per EVA RECONFIG & XFER activity.**
				714	EVA HARDWARE [contains old SAFER]	3.0 CTB		NOD3D1	Shuttle A/L (in Bag D)	74.30	**Transfer on FD11 per SAFER XFER activity.** **Reference resupply item 41.
				715	EVA Sys Xfer Bag	1		ISS A/L	Shuttle	8.60	**Transfer on FD11 per EVA RECONFIG & XFER activity.** **Reference resupply item #33.

STS-130 / 20A Return Transfer List

CHNG	☑	FD	Initials	Item #	Item Name	Qty	Initial Stowage	Temp Stowage	Stowage at Undock	Wt (lbs)	ACTIVITY / **Constraints** / **Comments
	☑	5		716	Foam labeled "PFE"	1		COL1D2 (in Bag F)	MD FLOOR STBD 1 (in Bag C)	1.00	**Reference resupply item #6.3.
	☑	5		717	Foam labeled "NODE 3 QDM"	1		COL1D2 (in Bag F)	MD FLOOR STBD 1 (in Bag C)	1.00	**Reference resupply item #6.2.
X				718	Food Warmer [s/n 1007]	1		MDDK (in Bag D)	MF57O (in CTB)	13.00	**Transfer after FD06.** **Swaps with resupply item 20.1.**
				719	GSC [s/n 1082] [in CTB]	1.0 CTB	in use		MF57O	5.10	**Transfer after EHS-GSC-OPS activity on FD06.**
				720	Lab MPC [s/n 1004]	1	LAB1OS4 installed		Shuttle Flight Deck deployed	9.50	**Transfer on FD09.** **Swap with resupply item #40.**
				721	MELFI Samples	-	MELFI		MF28E/G (in Glacier)	11.90	**Transfer on FD08 per MLF GLCR 20A SMP XFR activity.**
	☑	4		722	Multimeter [DOPEY]	1	NOD2 deployed (in Multimeter Kit)		MA16D (in Multimeter Kit)	1.40	**Swap with resupply item #1.** **Transfer multimeter only, leave kit and leads.**

[ ] - notes included by transfer team, - not on actual label

CHNG	☑	FD	Initials	Item #	Item Name	Qty	Initial Stowage	Temp Stowage	Stowage at Undock	Wt (lbs)	ACTIVITY / **Constraints** / **Comments
X				723	Pre-Treat Tank (E-K) [s/n 802025]	1.0 CTB		A/L Floor (strapped to Bag I)	MD CEIL STBD 1 (in Bag I)	5.84	**Don PPE - Tox 2 fluid. Verify PY-4, PY-5 connectors closed (position "3"). Verify PY-4 capped. Wrap Pretreat Tank and hose in bubble wrap to prevent damage to Hefty Bag during return. Bag Pretreat Tank and attached hose in Hefty Bag. Secure, tie open end of bag and grey tape. Place assembly into a 1.0 CTB (use empty CTB from NOD1D2).**
				725	PWR	1.0 CTB	MF14K		MD FLOOR STBD 1 (in Bag C)	5.50	**Only CTB and foam return in shuttle; the PWR that launched inside transferred to ISS. Reference resupply item #17.
				726	Radiation Area Monitors	1 ziplock	ISS installed		MF57O (in CTB)	0.55	**Transfer on FD11 after RAM INSTALL activity.**
				727	Return to Houston Imagery	1 ziplock	NOD2P4 (in 0.5 CTB s/n 1360)		MF14K (in item 403)	1.61	**Transfer on FD11.** **Tapes will continue to be added until after EVA3.
				728	Saliva Sample Return Pouch	1	in use		MF57O (in CTB)	0.26	**Transfer on FD11 per SALIVA STOW activity.**
				729	Silver Biocide Syringe Kit [s/n 1001]	1	NOD2O2 (in M-02 Bag s/n 1026)		MF57K	1.34	**Transfer on FD11 after final CWC fill.** **Swaps with return item 25.** **Use per water ops cue card, then transfer to shuttle.

Item #	Item Name	Qty	Stowage at Undock
739	SSC 20	1	LAB1P6
722	Multimeter [DOPEY]	1	MA16D (in Multimeter Kit)
731	WRS Fluids Control & Pump Assembly [old]	1	MD CEIL PORT 1 (in Bag E)
602	20A Return Bag 602 [Thirsk for return]	0.5 CTB	MD CEIL PORT 1 (in Bag E)
603	20A Return Bag 603 [Stott for return]	0.5 CTB	MD CEIL PORT 1 (in Bag E)
408	20A Return Bag 408	5 MLE Bag	MD CEIL PORT 2
723	Pre-Treat Tank (E-K) [s/n 802025]	1.0 CTB	MD CEIL STBD 1 (in Bag I)
703	Bag H	5 MLE Bag	MD CEIL STBD 2
608	20A Return Item 608 [CDRA Dessicant/Sorbent Bed (old)]	1	MD CEIL STBD 2 (in bag H)
701	Bag B	5 MLE Bag	MD FLOOR PORT 1
600	20A Return Item 600 [WRS Recycle Filter Tank Assembly s/n 005]	1	MD FLOOR PORT 1 (In bag B)
730	Torque Wrench Bag [s/n 1004] [contains Torque Wrench s/n 1008]	1	MD FLOOR PORT 1 (In bag B)
700	Bag A	5 MLE Bag	MD FLOOR PORT 2
610	20A Return Item 610 [Pump/Separator ORU]	1 foam box	MD FLOOR PORT 2 (in Bag A)
732	WRS Recycle Filter Tank Assembly [s/n 001]	1	MD FLOOR STBD 1 (in Bag C)
716	Foam labeled "PFE"	1	MD FLOOR STBD 1 (in Bag C)
717	Foam labeled "NODE 3 QDM"	1	MD FLOOR STBD 1 (in Bag C)
725	PWR	1.0 CTB	MD FLOOR STBD 1 (in Bag C)

Item #	Item Name	Qty	Stowage at Undock
702	Bag G	5 MLE Bag	MD FLOOR STBD 2
604	20A Return Bag 604 [DeWinne for return]	0.5 CTB	MD FLOOR STBD 2 (in bag G)
605	20A Return Bag 605	1.0 CTB	MF14E
401	20A Return Bag 401	0.5 CTB	MF14G
402	20A Return Bag 402	0.5 CTB	MF14G
403	20A Return Bag 403	1.0 CTB	MF14K
403.2	D2Xs Camera [S/N 1108]	1	MF14K (in CTB)
403.3	D2Xs Camera [S/N 1106]	1	MF14K (in CTB)
403.4	G1 Camcorder [S/N 1010]	1	MF14K (in CTB)
727	Return to Houston Imagery	1 ziplock	MF14K (in item 403)
721	MELFI Samples	-	MF28E/G (in Glacier)
709	Double Coldbag [s/n 1004]	1	MF43C
404	20A Return Bag 404	1.0 CTB	MF43H
737	Waste Water Samples	2	MF43H
740	NOD3 ITCS Sample	1 sample bag	MF43H
400	20A Return Bag 400	1.0 CTB	MF43O
609	20A Return Bag 609	1.0 CTB	MF57C
729	Silver Biocide Syringe Kit [s/n 1001]	1	MF57K
735	Potable Sample Adapter	1	MF57K (in Sample/ Purge Kit s/n 1001)

Item #	Item Name	Qty	Stowage at Undock
719	GSC [s/n 1082] [in CTB]	1.0 CTB	MF57O
704	Blood Sample Sleeve	1	MF57O (in CTB)
705	C & W Panel Cover	1 ziplock	MF57O (in CTB)
707	CSA-O2 [s/n 1046]	1	MF57O (in CTB)
708	CSA-O2 [s/n 1063]	1	MF57O (in CTB)
718	Food Warmer [s/n 1007]	1	MF57O (in CTB)
726	Radiation Area Monitors	1 ziplock	MF57O (in CTB)
728	Saliva Sample Return Pouch	1	MF57O (in CTB)
738	EMU 3-micron Filters [s/n 1022, s/n 1033]	2	MF57O (in CTB)
710	Double Coldbag [s/n 1006]	1	MF71C
706	CGBA-4	1 locker insert	MF71E
406	20A Return Bag 406	3.0 CTB	Middeck Seat 7 Bag
712	EMU [S/N 3004, Be]	1	Shuttle
713	EMU [S/N 3018, Pk]	1	Shuttle
715	EVA Sys Xfer Bag	1	Shuttle
611	20A Return Item 611 [Recycle to FCPA]	1	Shuttle A/L (in Bag D)
714	EVA HARDWARE [contains old SAFER]	3.0 CTB	Shuttle A/L (in Bag D)
711	EDV [lid # 897, body # 418]	1	Shuttle A/L (in Bag D)
720	Lab MPC [s/n 1004]	1	Shuttle Flight Deck deployed
736	LiOH [STS-128/17A #48-52 & 70-72]	8 cans	Shuttle LiOH Box

Contents:

Timeline Procedures:
**N3 VAP CAP REMOVAL
**NODE 3 PPRV CAP RMV
**N3 OVHD IMV CAP
BISP-CDR PILL-INGEST
BISP-FE5 PILL-INGEST
**STBD DECK IMV INSTL
**STBD OVRHD IMV INSTL
**STBD DECK IMV C/O
**STBD OVRHD IMV C/O
WRS-UPA-FILL
CMS-ARED-INSTALL
**S&M-REMOVE ISP D5
**S&M-REMOVE ISP D4
P/TV-NODE 3-CAM-INST
**CBCS SETUP
NOD2-IMV DUCT S/U
**CUPOLA DEPRESS PART1
**CUPOLA DEPRESS PART2
**CUPOLA DEPRESS PART3

ESA Timeline Procedures:
None

JAXA Timeline Procedures:
None

Tasklist Procedures:
BCAT3-CRYSTAL-CHECK
WHC-KTO-REPLACE
WHC-ЕДВ-У-R&R
PWD-BEV ADPTR-R&R

JAXA Tasklist Procedures:
None

ESA Tasklist Procedures:
None

Timeline Procedures:

****N3 VAP CAP REMOVAL **NODE 3 PPRV CAP RMV**						
1.120 NODE 3 PPRV SAMPLE PORT CAP REMOVAL						
Type: Standard						
#	**LOCATION**	**ITEM NAME**	**P/N**	**S/N**	**B/C**	**Notes**
1	**Pregathered ToolSet "Jeff" or "TV"**	Ratchet, 3/8" Drive	-	-	-	
2		5/32" Hex Head, 1/4" Drive	-	-	-	
3		Driver Handle, 1/4" Drive	-	-	-	
4	**NOD1D4**	Breaker Bar, 3/8" Drive	-	-	-	
5		1-5/8" Crowfoot, 3/8" Drive	-	-	-	
6		2" Crowfoot, 3/8" Drive	-	-	-	
7		Universal Joint, 3/8" Drive	-	-	-	
8		Wire Cutters	-	-	-	
9	**LAB1D5** 1.0 CTB: 20A Pregather #1, S/N 1263, B/C 010599J	FFTD and Gamah Seal Maintenance Kit	SDG39135920-701	1001	-	
10		Gamah Fitting Maintenance Kit	683-60408-4	000001	-	
11		Retaining Ring Installation/Removal Tool, 1"	683-60474-4	-	-	
12		Gamah Fitting Maintenance Kit	683-60408-3	-	-	
13		Gamah Seal Removal Tool, 1" Gamah Fitting	683-60467-4	-	-	
14		Gamah Seal Maintenance Kit	528-50000-4	-	-	Ziplock
15		1.0 Gamah Fitting Soft Seal	S2L121-V75	-	-	
16		Dry Wipes	SEG33107170-306	-	-	
17		Fluid Fitting Torque Device	990204-101	-	-	
18		Brass Picks	887-200	-	-	

N3 OVHD IMV CAP						
1.111 Node 3 Overhead IMV Cap Installation						
Type: Standard						
#	**LOCATION**	**ITEM NAME**	**P/N**	**S/N**	**B/C**	**Notes**
1	**Pregathered ToolSet "Jeff" or "TV"**	5/32" Hex Head, 1/4" Drive	-	-	-	
2		7/16" Deep Socket, 1/4" Drive	-	-	-	
3		Driver Handle, 1/4" Drive	-	-	-	
4	**NOD1D4**	(10-50 in-lbs) Trq Wrench, 1/4" Drive	-	-	-	
5	**LAB1D5** 1.0 CTB: 20A Pregather #1, S/N 1263, B/C 010599J	Node 1 Mod Kit	-	-	-	Ziplock
7		Face O-Ring	2-255S0604	-	-	
8		Bore O-Ring	2-248S0604	-	-	
9		V-Band Coupling Clamp	MS27115-21R	-	**Any**	**REPORT** B/C to **MCC-H**
10	**NOD1P2** 3.0 CTB: Node 3 Vestibule Outfitting kit (VOK), S/N 1048, B/C 004233J	Ziplock: "NOD1-NOD3 IMV Hardware"	-	**-**	**-**	
11		IMV Cap w/ Test Adapter	683-15016-6	**Any**	**Any**	**REPORT** P/N and S/N to **MCC-H** REMOVED FD06 as part of NODE 3 VESTIBULE OUTFITTING
Type: Restow						
12	**NOD1P2** 3.0 CTB: Node 3 Vestibule Outfitting kit (VOK), S/N 1048, B/C 004233J	0.5 CTB: NOD3 Uninstalled Hardware	SEG33111836-303	-	-	Created during NPRV INSPECT activity
13		Ziplock:" Node 3 Closeout Panel Launch Bolts"	-	-	-	
14		Launch Restraint Bolts [Qty:3]	-	-	-	

BISP-CDR PILL-INGEST BISP-FE5 PILL-INGEST						
2.002 ALENDRONATE PILL INGESTION PROCEDURE						
Type: Standard						
#	**LOCATION**	**ITEM NAME**	**P/N**	**S/N**	**B/C**	**Notes**
1	**COL1A1_D2**	Alendronate Kit	SJG46121562-301	1001	HRF05604J	

**STBD DECK IMV INSTL **STBD OVRHD IMV INSTL **STBD DECK IMV C/O **STBD OVRHD IMV C/O						
1.118 Node 3 STBD NPRV Removal and IMV Valve Installation						
Type: Standard						
#	**LOCATION**	**ITEM NAME**	**P/N**	**S/N**	**B/C**	**Notes**
1	**Pregathered ToolSet "Jeff" or "TV"**	Ratchet, 1/4" Drive	-	-	-	
2		4" Ext, 1/4" Drive	-	-	-	
3		6" Ext, 1/4" Drive	-	-	-	
4		5/32" Hex Head, 1/4" Drive	-	-	-	
5		7/16" Deep Socket, 1/4" Drive	-	-	-	
6		Driver Handle, 1/4" Drive	-	-	-	
7		Wire Cutters	-	-	-	
8		4" Common Tip Screwdriver	-	-	-	
9		8-1/4" Long, 2" Cut Scissors	-	-	-	
10		Static Wrist Tether	-	-	-	
11	**NOD1D4**	1/4" Socket, 1/4" Drive	-	-	-	
12		(10-50 in-lbs) Trq Wrench, 1/4" Drive	-	-	-	
13		Universal Joint, 1/4" Drive	-	-	-	

WRS-UPA-FILL						
21-0223 1.904 UPA ACTIVATION						
Type: Standard						
#	**LOCATION**	**ITEM NAME**	**P/N**	**S/N**	**B/C**	**Notes**
1	**LAB1P2** 0.5 CTB, S/N 1221, B/C 010402J	Regen ECLSS Tox-2 PPE Kit	SEG42103702-302	1002	CHCCPK02J	
2		Safety Goggles	503R	-	-	
3		Mess-Up Mitts	RMUM-12	-	-	
4		Silver Shield Gloves	SS104M	-	-	
5		Surgical Masks	8210	-	-	
6	**LAB1S1** TeSS Stowage Area	Крышка ЕДВ (EDV Cover)	11Ф615.8711-180A15-1	911	00047146R	
7		Корпус ЕДВ (EDV Bucket)	11Ф615.8711-120A15-1	441	00047817R	
Type: Restow						
8	**LAB1S1** TeSS Stowage Area	Крышка ЕДВ (EDV Cover)	11Ф615.8711-180A15-1	916	00047825R	
9		Корпус ЕДВ (EDV Bucket)	11Ф615.8711-120A15-1	2 п.34	00043103R	

CMS-ARED-INSTALL						
22-0579 2.1.425 ARED – NODE 1 TO NODE 3 RELOCATION						
Type: Standard						
#	**LOCATION**	**ITEM NAME**	**P/N**	**S/N**	**B/C**	**Notes**
1	**LAB1O5_K1** 0.5 CTB: ARED-Calibration Tools, S/N 1079, B/C 003961J	Rheolube	RHEOLUBE 2000	-	Any	
2	**NOD1D4**	(200-1000 in-lbs) Trq Wrench, 3/8” Drive	SEG33117289-303	M213579	-	

3	**Pregathered Toolset Labeled "TV" or "Jeff"**	9/16" Socket, 3/8" Drive	F181	-	-	May be temp stowed from previous day's ARED Relocate Steps
4		Ratchet, 3/8" Drive	F830	-	-	

****S&M-REMOVE ISP D5** ****S&M-REMOVE ISP D4**						
1.248 Integrated Stowage Platform (ISP) Removal						
Type: Standard						
#	**LOCATION**	**ITEM NAME**	**P/N**	**S/N**	**B/C**	**Notes**
1	**NOD3O1** 2.0 CTB: INSTALLATION HW 2, S/N 1045, B/C 004179J	1-1/16" Socket, ½" Drive	SW341	-	-	Transfer List Resupply Item #50
2	**NOD1D4**	3/8" to ½" Adapter	-	-	-	
3		4" Ext, 3/8" Drive	-	-	-	
4		15/16" Socket, 3/8" Drive	-	-	-	
5		5/32" Stubby Hex ¼" Drive	-	-	-	
6		1" Crowfoot	-	-	-	
7	**Pregathered Toolset Labeled "TV" or "Jeff"**	Ratchet, 3/8" Drive	-	-	-	
8		9/16" Socket, 3/8" Drive	-	-	-	

Type: Restow						
9	**NOD1P2** 3.0 CTB: Node 3 Vestibule Outfitting kit (VOK), S/N 1048, B/C 004233J	0.5 CTB: NOD3 Uninstalled Hardware	SEG33111836-303	1065	003947J	
10		Ziplock: ISP Ankle Braces and Attach Bolts	-	-	-	
11		Noncaptive, lower ISP Attach Bolts [QTY: 4]	-	-	-	
12		Noncaptive, upper ISP Attach Bolts [QTY: 4]	-	-	-	
13		Ankle Brace [QTY: 4]	-	-	-	
14	**Taped to ISP**	Ziplock	-	-	-	
15		1-1/16" Socket, 1/2" Drive	SW341	-	-	

1

P/TV-NODE 3-CAM-INST						
15.112 USOS ICP POWER/VIDEO WITH SLIB - G1 CAMCORDER						
Type: Standard						
#	**LOCATION**	**ITEM NAME**	**P/N**	**S/N**	**B/C**	**Notes**
1	**NOD1O4_E2** 1.0 CTB: Broken/Expired Items #1, S/N 1272, B/C 010608J	Digital Camcorder Video/Power Cable	SED33111490-303	1033	-	
2	**COL1O2_B1** 1.0 CTB: Video Cables and Accessories, S/N 1069, B/C 003857J	ICP I/F CABLE 22FT	SEG16103296-301	Any	Any	**Report S/N and B/C to MCC-H**
3		SLIB	SEG16103299-301	1002	00011002J	
Type: Restow						
4	**NOD3 Deployed**	G1 Camcorder	SEZ33120850-801	Any	Any	**Report S/N and B/C to MCC-H**
5		RCA-BNC Adapter	SED33106400-301	Any	-	Installed on side of G1 Camcorder

**CBCS SETUP						
1.403 CBCS INSTALLATION/REMOVAL - GENERIC						
Type: Standard						
#	**LOCATION**	**ITEM NAME**	**P/N**	**S/N**	**B/C**	**Notes**
1	**Temp stowed at N1 Port Hatch from FD 5**	Camera Bag	SEG33112759-301	-	-	
2		CBCS Camera Assembly	SEG33112576-301	-	-	
3		Ku-Band Power Supply	SEG46116711-302	-	-	Cables should be connected already per previous CBCS Temp Stow FD05.
4		LED Control Unit	SEG33112643-301	-	-	
5		Video Interface Unit	SEG33112646-301	-	-	
6		CBCS Camera Cable	SEG33112641-301	-	-	
7		CBCS Electronics Cable	SEG33112638-301	-	-	
8		CBCS Electronics Extension Cable	SEG33112639-301	-	-	
9		UOP Power PSA Cable, 120VDC	SEG46116745-301	-	-	

NOD2-IMV DUCT S/U						
1.106 Node 3 Temporary Ventilation Install and Remove for Initial Ingress						
Type: Standard						
#	**LOCATION**	**ITEM NAME**	**P/N**	**S/N**	**B/C**	**Notes**
1	**NOD1P2** 3.0 CTB: Node 3 Vestibule Outfitting kit (VOK), S/N 1048, B/C 004233J	Radial Port Closeout	683-60461-11	-	-	
2		IMV Jumper O-Ring [QTY:2]	2-161S0604-70	-	-	
3	**NOD1D4**	10-50in lbs Trq Wrench, 1/4” Drive	-	-	-	
4		10" Ext, 1/4" Drive	-	-	-	
5		1/4" Deep Socket, 1/4" Drive	-	-	-	

6	**Pregethered Toolset "TV" or "Jeff"**	7/16" Deep Socket, 1/4" Drive	-	-	-	
7		Ratchet, 1/4" Drive	-	-	-	
8		5/32" Hex Head, 1/4" Drive	-	-	-	
9		8-1/4" Long, 2" Cut Scissors	-	-	-	
10		1/2" Deep Socket, 1/4" Drive	-	-	-	

****CUPOLA DEPRESS PART1** ****CUPOLA DEPRESS PART2** ****CUPOLA DEPRESS PART3**						
1.172 Cupola Depressurization (Node 3 Port)						
Type: Standard						
#	**LOCATION**	**ITEM NAME**	**P/N**	**S/N**	**B/C**	**Notes**
1	**Temp stowed NOD3 from NOD1/NOD3 vestibule leak check**	MPEV Internal Sampling Adapter (ISA)	97M55830-1	2	000002M	
2		Scopemeter Pressure Probe	SEG39130244-302	-	004461J	Installed on ISA
3		VAJ-78-1 5ft	683-17111-1	-	00002677J	
4		Multimeter Kit	10118-10018-04	1017	-	
5		Multimeter	87	1010	00088636J	Happy
Type: Restow						
6	**Leave connected to NOD3 Port Hatch MPEV for FD8 CUP pressure check**	MPEV Internal Sampling Adapter (ISA)	97M55830-1	2	000002M	
7		Scopemeter Pressure Probe	SEG39130244-302	-	004461J	Installed on ISA
8		VAJ-78-1 5ft	683-17111-1	-	00002677J	
9		Multimeter Kit	10118-10018-04	1017	-	
10		Multimeter	87	1010	00088636J	Happy

ESA Timeline Procedures:
None

JAXA Timeline Procedures:
None

Tasklist Procedures:

BCAT3-CRYSTAL-CHECK						
2.034 BCAT-4 CRYSTAL CHECK FOR SAMPLES 8,9, and 10						
Type: Standard						
#	**LOCATION**	**ITEM NAME**	**P/N**	**S/N**	**B/C**	**Notes**
1	**LAB1O7 Rack Front**	BCAT-3 Slow Growth Sample Module	67041FSM2200	-	00030426L	
2	**LAB1O4_J1** 0.5 CTB BCAT S/N 1240, B/C 010421J	LED Mini Maglight	60107MFA2017	-	00105256L	
3		1.5V Battery Size AA	528-41350-3	-	-	(if required)

WHC-KTO-REPLACE						
2.305 WHC [KTO] R&R						
Type: Standard						
#	**LOCATION**	**ITEM NAME**	**P/N**	**S/N**	**B/C**	**Notes**
1	**FGB Panel 220** or **FGB Floor** or **NOD1O2**	Solid Waste Container – Body (aka KTO Body)	11Φ615.8720A55-20	257 263 264 265 272 275 278 282 304 307 308 309 310 325	- 00112722J 00112724J 00112735J 00116316J 00116313J 00116302J 00116311J 00112744J 00112738J - 00112746J 00112748J 00112736J	This is the list of available KTO Bodies. **REPORT S/N and B/C**
2		Solid Waste Container – Lid (aka KTO Bottom)	11Φ615.8720A55-10	257 258 263 265	00098427R 00098428R 00112721J 00112733J	This is the list of available KTO Lids. **REPORT S/N and B/C**

				272 274 275 278 282 307 308 309 310 325	00098472R 00098474R 00098475R 00098438R 00098442R 00112737J - 00112745J 00112747J -	
3	**LAB1D1**	Solid Waste Container – Body (aka KTO Body)	11Ф615.8720A55-20	305	00112730J	Prepositioned for Install
4		Solid Waste Container – Lid (aka KTO Bottom)	11Ф615.8720A55-10	276	00098436R	
5	**NOD1D4**	Ratchet, 1/4" Drive	SKG33117562-939	-	-	
6		10 mm 6 Pt Socket, 1/4" Drive	SKG33117562-657	-	-	
7		(10-50 in-lbs) Trq Wrench, 1/4" Drive	SEG33112395-301	M206422	-	
Type: Restow						
8	**LAB1S1** TeSS	Solid Waste Container – Body (aka KTO Body)	11Ф615.8720A55-20	-	-	**REPORT S/N and B/C**
9		Solid Waste Container – Lid (aka KTO Bottom)	11Ф615.8720A55-10	-	-	

1

WHC-ЕДВ-У-R&R						
2.302 WHC ЕДВ R&R						
Type: Standard						
#	**LOCATION**	**ITEM NAME**	**P/N**	**S/N**	**B/C**	**Notes**
1	**LAB1P2** 0.5 CTB S/N 1221, B/C 010402J	Regen ECLSS Tox-2 PPE KIT	SEG42103702-302	1002	CHCCPK02J	
2		Safety Goggles	16644-00000	-	-	
3		Silver Shield Gloves	SSG/10	-	-	
4		Dust Mask	9211	-	-	
5	**LAB1D1**	ЕДВ Крышка (EDV Lid)	11Ф615.8711-180A15-1	935	00125549J	Prepositioned
6		ЕДВ Корпус (EDV Bucket)	11Ф615.8711-	459	00125565J	

			120A15-1			
7	**NOD1O2**	ЕДВ Крышка (EDV Lid)	11Ф615.8711-180A15-1	902	00098592R	
8		ЕДВ Крышка (EDV Lid)	11Ф615.8711-180A15-1	904	00098594R	
9		ЕДВ Крышка (EDV Lid)	11Ф615.8711-180A15-1	922	00047831R	
10	**FGB**	ЕДВ Крышка (EDV Lid)	11Ф615.8711-180A15-1	-	-	**REPORT S/N and B/C**
11		ЕДВ Корпус (EDV Bucket)	11Ф615.8711-120A15-1	-	-	
Type: Restow						
12	**LAB1S1**	ЕДВ Крышка (EDV Lid)	11Ф615.8711-180A15-1	931	00116326J	
13		ЕДВ Корпус (EDV Bucket)	11Ф615.8711-120A15-1	455	00116319J	

PWD-BEV ADPTR-R&R						
22-0309 PWD Beverage Adapter Modification and Install						
Type: Standard						
#	**LOCATION**	**ITEM NAME**	**P/N**	**S/N**	**B/C**	**Notes**
1	**LAB1O4_D1**	PWD Beverage Adapter	SEG33120333-302	1002	-	
2	**NOD1D4**	Ratchet, 1/4” Drive	SKG33117562-939	-	-	
3		5/32” Hex Head, 1/4” Drive	SKG33117562-742	-	-	
Type: Restow						
4	**LAB1O4_D1**	PWD Beverage Adapter	SEG33120333-301	-	-	

JAXA Tasklist Procedures:
None

ESA Tasklist Procedures:
None

MSG 083 - RETURN BAY LAYOUTS

Good morning STS-130/20A crew. Enclosed are the 5-MLE bag layouts and middeck locker map. Any deltas to this plan will be uplinked before cabin stow. Please let us know if you have any questions or comments.
-The STS-130/20A Middeck Stowage Team

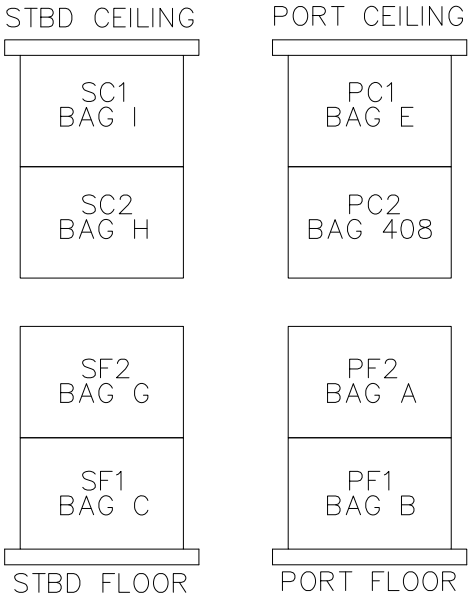

-The ditch bags should be configured as shown above.
-Bag D will be stowed in the Airlock.
-Please stow the logbooks and Actiwatches together in MF71K (PI#2) to help simplify the runway destow requirement.
-The UPA DA foam can be stowed behind the retention net for return

END OF PAGE 1 OF 7, MSG 083

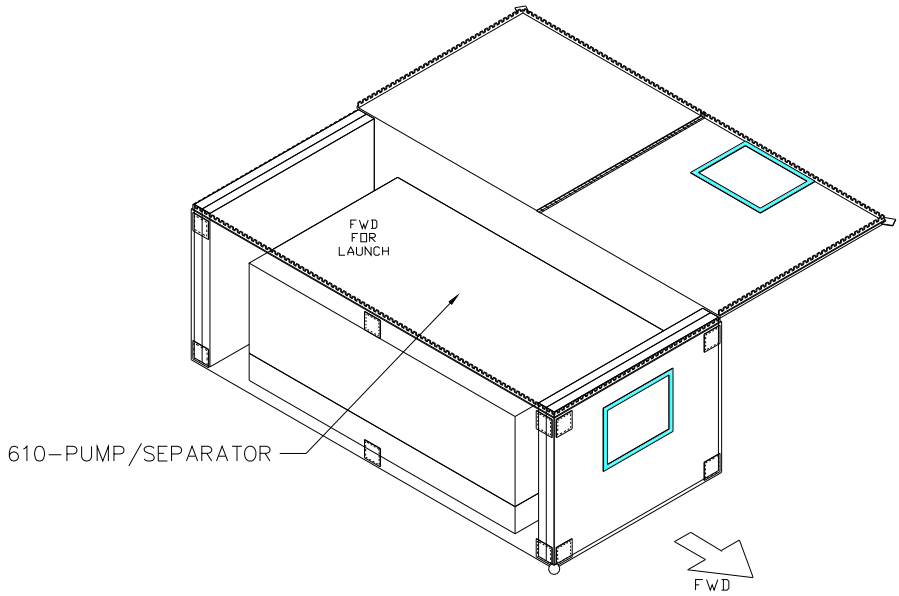

Bag A: Pump/Separator (item 610) should be bagged. Due to orientation requirement, the end marked “FWD FOR LAUNCH” on the Pump/Separator must be on the aft side of the bag. Fill voids with foam.

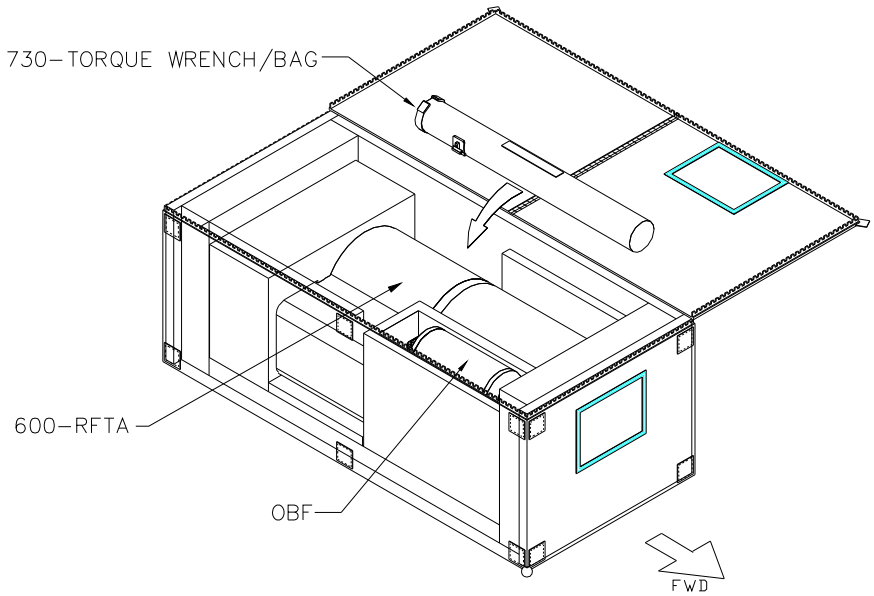

Bag B: Configuration is similar to launch. Center RFTA (item 600) in bag and place the Torque Wrench Bag (item 730 in bubble wrap) on top.

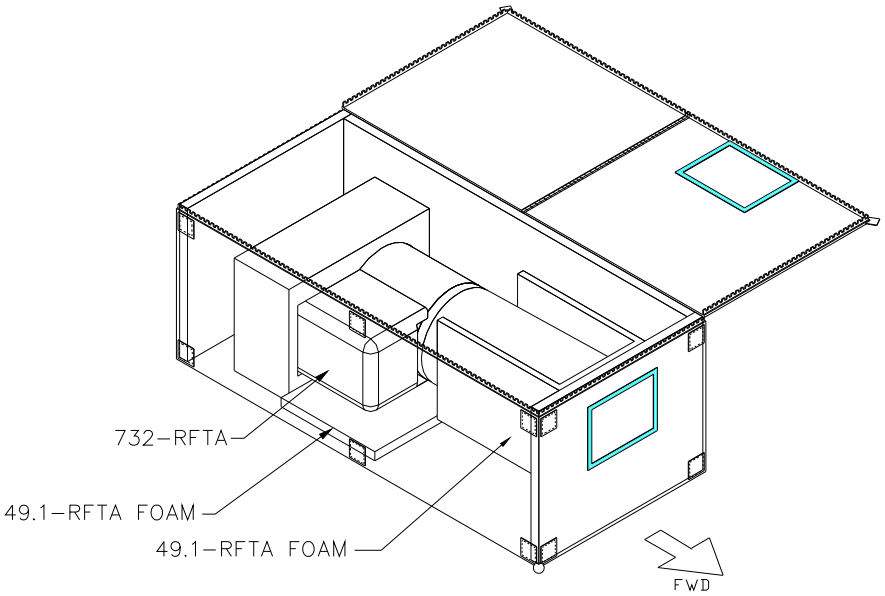

Bag C: Center RFTA (item 732) in bag, using the foam transferred from the Node (item 49.1) as shown. The PFE foam (item 716), QDM foam (item 717) and PWR foam/CTB (item 725) can be stowed in available volume.

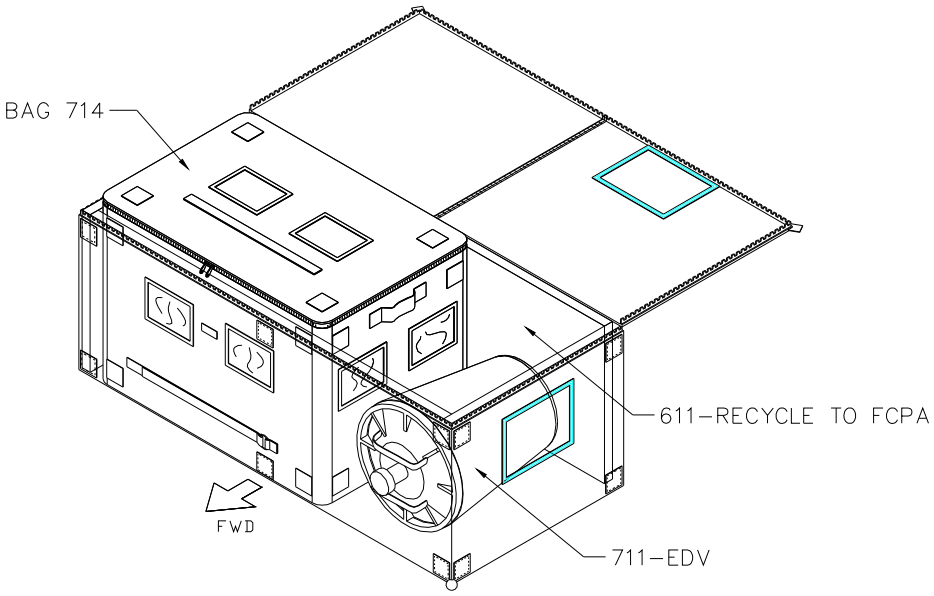

Bag D: EDV (item 711) must be bagged. The Recycle to FCPA (item 611) can be stowed on top.

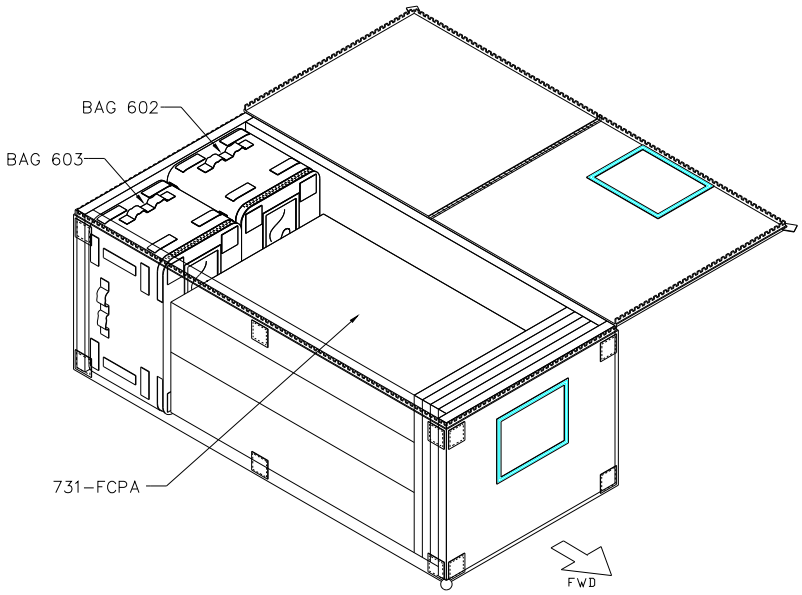

Bag E: FCPA/foam (item 731) should be bagged. Fill voids on top of FCPA with foam.

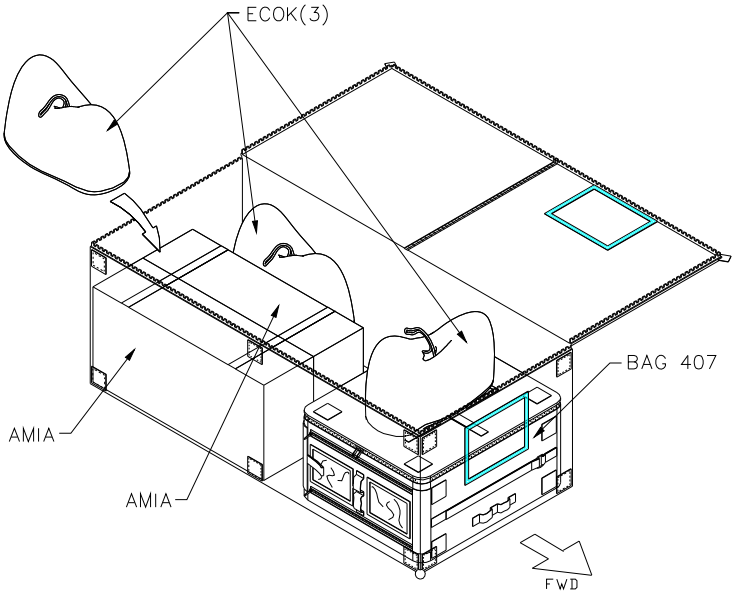

Bag 408: Bag was prepacked, but please configure as shown. The Hygiene H2O Dispenser should already be prepacked in the bag and can be stowed in available volume.

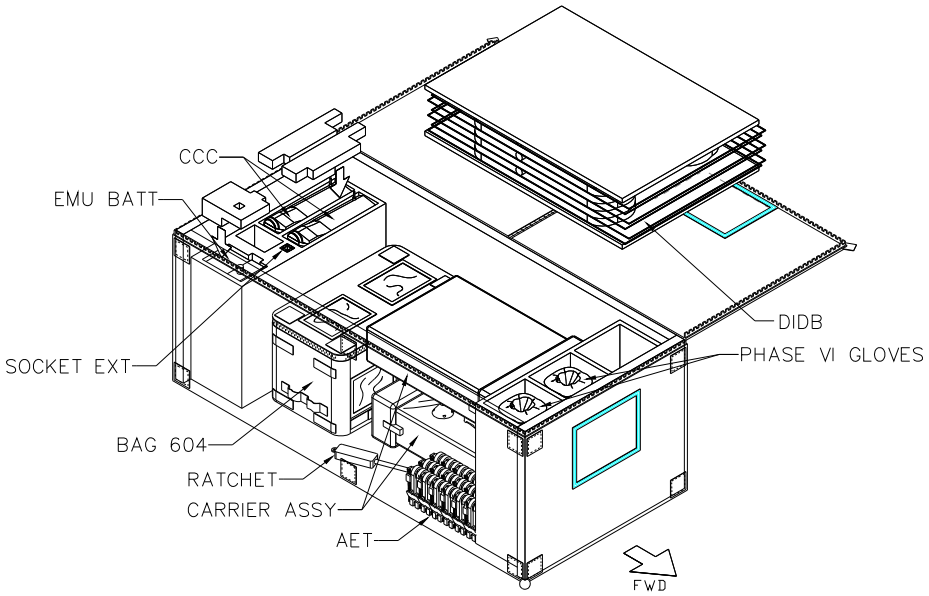

Bag G: Stow bag as shown. The EVA Power Harness and mesh bag can be stowed in available volume. Any un-used DIDBs can be placed on top.

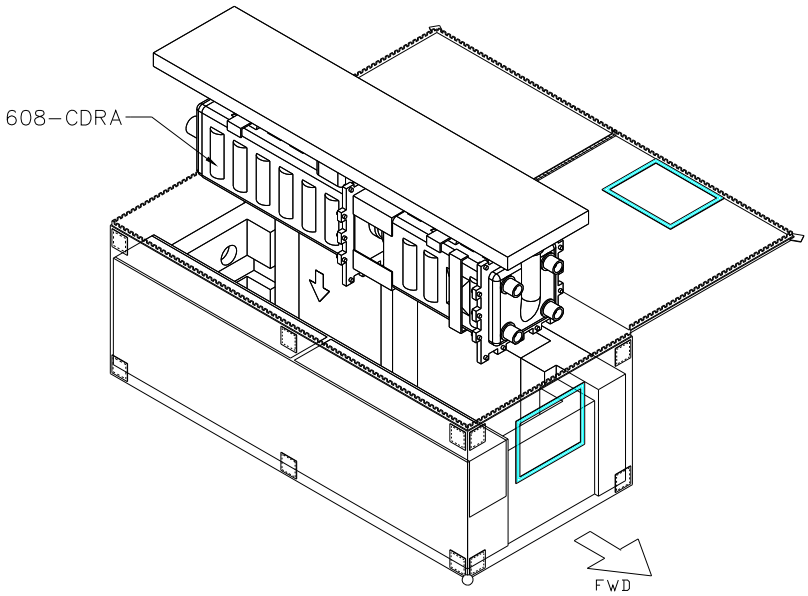

Bag H: Configuration is same as launch

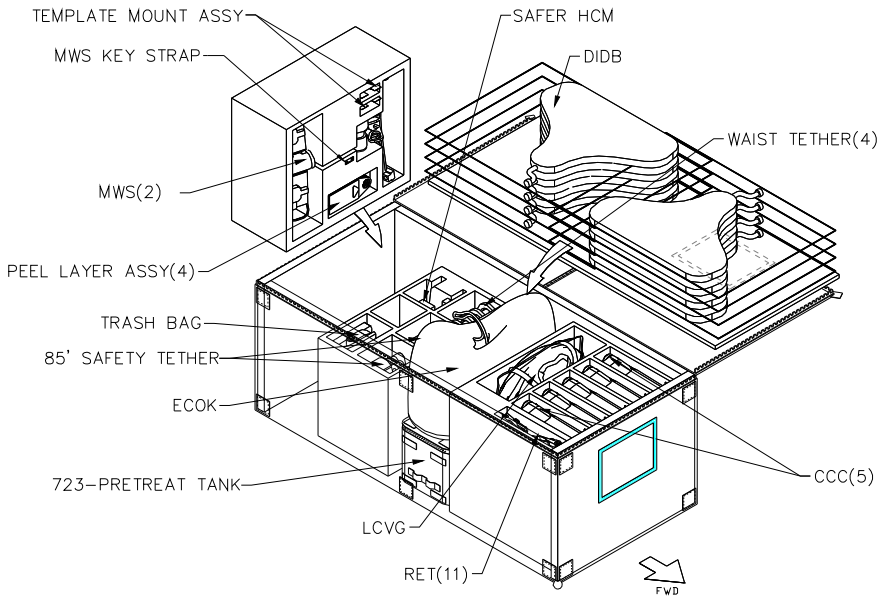

Bag I: Configuration is same as launch with the exception of the Pretreat Tank (item 723). This will take the place of the bag containing ACES gloves and entry garments (item 38).

MSG 083 - RETURN BAY LAYOUTS

MODULAR LOCKER LAYOUT DESCENT

LW MAR
SJD32108929-TBD

CDR	GEORGE ZAMKA
PLT	TERRY VIRTS
M/S #1	KATHRYN HIRE
M/S #2	STEPHEN ROBINSON
M/S #3	NICHOLAS PATRICK
M/S #4	ROBERT BEHNKEN

LEADER:	MELISSA BANDA
DATE:	02-13-10
LAUNCH:	02-07-10
FLIGHT:	STS-130/20A NODE 3
VEHICLE:	OV-105
CREW:	6 MAN 13 + 1 + 2 DAYS
RQMTS:	TEPC, ERGOMETER, GALLEY SLEEPING BAGS

ML60B 6013 -311
1
ML60E 1434 -304
ML60M 6014 -312

VOL B (MA4D/J) 7436 -324
VOL 3B (MA75J) 7425 -328

PANTRY FOOD (SNACKS) 1622 -308
MF57A PANTRY FOOD (UTENSILS) 1622 -308
PANTRY FOOD (BEVERAGES) 1622 -302

MF43C 0663 -301 — ITEM 709 (DOUBLE COLDBAG)
MF57C 1758 -304 — BAG 609 (1737-301)
MF71C 0663 -301 — ITEM 710 (DOUBLE COLDBAG)

MIDDECK FORWARD

MF14E TBD -301 — BAG 605 (1734-302)
MF28E/G 7493 -302 — GLACIER 721-MELFI SAMPLES
MF43E 5473 -305
MF57E 9014 -318
MF71E 5971 -312 — 706-NLP-CELLS (CGBA)

MF14G 1759 -304 — BAG 401 (1735-301) | BAG 402 (1736-302)
MF43G 1902 -308
MF57G 1786 -305 — CWWDF/TONOPEN KIT; MENU FOOD
MF71G 1903 -305

MF14H 6240 -311
MF28H 1418 -301
MF43H 2760 -TBD — BAG 404; 737-WATER SAMPLES; PURGE BAGS; 740-NODE 3 ITCS
MF57H 2762 -307
MF71H 0305 -311

MF14K 7211 -303 — BAG 403 (ISS PHOTO/TV BAG) (CTB)
MF28K 2764 -306
MF43K 2761 -308
MF57K 1433 -303 — NLP GAP ASSY(16); HAND CRANK; SAMPLE/PURGE KIT; 735-SAMPLE ADAPTER; 729-SILVER BIO KIT
MF71K 1435 -304 — 0306 -314 POST INSERTION #2 ACTIWATCH(3); FRED (5877-306)

MF14M 8047 -304 — CTB 6015-326
MF28M 2765 -304
MF43M 1900 -308
MF57M 8965 -323
MF71M 3005 -304

MCIU
PDI

MF14O 5452 -330
MF28O 2766 -305
MF43O 1788 -303 — BAG 400 (1732-301)
MF57O 1784 -303 — 704-BLOOD SLEEVE; 705-PANEL COVER; 707/708-CSA-02; 718-FOOD WARMER; 719-QSC/726-RAM; 728-SALIVA POUCH; 738-MICRON FILTERS (1738-301)
MF71O 6697 -340

MIDDECK AFT

MA9D/F 9882 -312
MA16D 6250 -358 — 6300 -350 IFM TOOLS; ~~2163-302~~; ~~2161-305~~; ~~2162-307~~; 722-MULTIMETER
MA16F 1904 -307

MA9G 8737 -311
MA16G 6299 -327 — COAS/WORK LIGHT; SHIELDS/D2XS; AUDIO DOSIMETER; BTA

MA9J 8719 -309 (CTB 6066-334)
MA16J 8723 -302 (CTB)

MA9L 6269 -312 — 5962 -303; 6256-309
MA16L 1901 -305

MA9N 7432-342 — SOFT STWG BAGS; 4980-315; 8071-327; 8070-304
MA16N 1908 -309

MD CEIL (PORT 1) 1727 -304 — 731-FCPA; HCTB 602-CREW PREF; HCTB 603-CREW PREF
MD CEIL (PORT 2) 1793 -302 — ECOK(3); BAG 407: EMU BATT/LCVG; ION FILTER(2); BRT/WAIST TETH; AMIA(2); HYGIENE H20 DISPENSER; (BAG 408)
MD CEIL (STBD 1) 1436 -305 — MWS/WAIST TETH(4); 85' TETH(2)/TRASH BAG; ECOK/CCC(5)/DIDB(8); RET(11); 723-PRETREAT TANK
MD CEIL (STBD 2) 0245 -309 — 608-CDRA
MD FLOOR (PORT 2) 1401 -305 — 610-PUMP SEPARATOR
MD FLOOR (PORT 1) 1766 -304 — RFTA; 730-TORQUE WRENCH/BAG; OBF
MD FLOOR (STBD 2) 1762 -306 — PHASE VI GLOVES(2PR); EMU BATTERY; AET(16)/CCC(2)/DIDB(6); OIH CARRIER(2); HCTB 604-CREW PREF
MD FLOOR (STBD 1) 1766 -303 — 732-RFTA; 716-PFE FOAM; 717-NODE 3 ODM FOAM; 725-PWR CTB/FOAM

E I H A B G C D

A16 7490 -311
A17 7424 -304
VOLUME D (MD52C) 7498 -303
VOLUME F (MD76M) 1403 -306 — WET TRASH
VOLUME G (MD80R) 1800 -351
VOLUME H (MD23R) 8068 -325 — EMU SERVICE KIT (INBD); EVA ACCESS (OBD) 8065 -316
WMC (MA82H) 4575 -319; 0914 -332; 1641-332
EXT AIRLOCK — 5557 -339 (STBD) 2-EMUs 5555 -343 (PORT); EXT A/L FLOOR 1781 -306; BAG 714-SAFER; 711-EDV; 611-RECYCLE TO FCPA

31 LIOH: 29 + 1 ATCO IN LIOH BOX, 2 INSTLD, (7435-338)

WINDOW SHADE BAG: (5548-381)

S7 BAG 1155-304: TCTB 406: MSL MPC(4); PIGS IN A BLKT; SWAB RETURN KIT; IVIDIL

ONLY LOCATIONS THAT CHANGE OR CONTAIN TRANSFER ITEMS ARE SHOWN

L10A1: AVIU/MPC (6686-343)
L10A2: DTV MUX
L10A3: DTV VTR/VIP
L11: PDIP 2 OIU 1/2
L12A1: SSP 1
L12A2: SSP 2
L12A3: PDIP 1
R12A1: VPU
R12A2: OBSS/OPP

✱ NOT APPROVED
● RUNWAY DESTOW
☒ SWAP
⊗ TRANSFER TO ISS
CTB-CARGO TRANSFER BAG
HCTB-HALF CARGO TRANSFER BAG

C/D JSC 1903
P/D JSC 5096
C/D KSC 1904
P/D KSC 5097
CEIT KIT 2122
MDK LBL 1606
DWG NO. SGD32104453
/USR/DWGS/LOCKER/STS130
CCMM: M. MCDONALD 483-1384

NOTE: LOCKER LAYOUTS ARE FOR REFERENCE ONLY AND ARE NOT RELEASED DRAWINGS.
FOR RELEASED DRAWINGS, REFER TO CCCD DRAWING # SGD32104453

END OF PAGE 7 OF 7, MSG 083

FD 7 Morning Crew Choice Times

TDRS	AOS	LOS	Delta (min)	Notes
E-46	5/13:16	5/13:39	23	Alpha Stop @ 5/13:26
W-171	5/14:09	5/14:33	24	
E-46	5/14:49	5/15:19	30	Alpha Stop @ 5/15:09
W-171	5/15:36	5/16:08	32	

FD 7 Evening Crew Choice Times

TDRS	AOS	LOS	Delta (min)	Notes
E-275	6/00:57	6/01:11	14	Analog only
W-171	6/01:26	6/01:57	31	
E-275	6/02:52	6/03:11	19	Alpha Stop @ 6/02:57, Analog only
W-171	6/03:16	6/03:33	17	

Note: Please notify MCC-H 10 minutes prior to the event to allow for ground network configuration.

END OF PAGE 1 OF 1, MSG 084