# STS-116 / 12A.1

## *FD 10 Execute Package*

| MSG | Page(s) | Title |
|---|---|---|
| 107C | 1 - 11 | FD10 Flight Plan Revision **(pdf)** |
| 108 | 12 - 13 | FD10 Mission Summary **(pdf)** |
| 081 | 14 - 15 | EVA 4 SAW SRMS Viewing **(pdf)** |
| 110A | 16 - 18 | FD10 Transfer Message **(pdf)** |
| 111A | 19 | FD10 Water Summary Message **(pdf)** |
| 112 | 20 - 24 | Middeck Stowage Bag Drawings **(pdf)** |
| 109 | --- | FD09 MMT Summary **(pdf - Electronic Only)** |

***Approved by FAO:*** *Terry Clancy*

*Last Updated: Dec 18 2006 12:07PM GMT*
***JEDI*** *(**J**oint **E**xecute package **D**evelopment and **I**ntegration), v2.04.0003*

MSG INDEX


| MSG NO. | TITLE |
|---|---|
| MSG 081 | EVA 4 SAW SRMS VIEWING (Reprint from FD08) |
| MSG 107 | FD10 Flight Plan Revision |
| MSG 108 | FD10 Mission Summary (14-0626) |
| MSG 109 | FD09 MMT Summary |
| MSG 110 | FD10 Transfer Message (14-0628) |
| MSG 111 | FD10 Water Summary Message |
| MSG 112 | Middeck Stowage Bag Drawings |


1. POST EVA 4 TOOL STOW UPDATE

   Please incorporate the following update (Ref: MSG 102 (14-0622) EVA 4 Procedures), EVA 4 TOOL CONFIG on page 6 of 15, under POST EVA 4 TOOL STOW, item 2:

   WAS:

   2. Retrieve Loop pin Puller (& Caddy) and Needle
      Nose pliers (& caddy); return items to Shuttle
      Stow in XXXX

   IS:

   2. Retrieve Loop pin Puller (& Caddy) and Needle
      Nose pliers (& caddy); return items to Shuttle
      Stow in Shuttle External A/L Floor Bag

2. SPACEHAB VIEWPORT VIOLATIONS

   There are no viewport violations for FD10.

3. FD10 N2 Repress Term

   The N2 Repress Term has been moved out of the EVA timeframe, just prior to Crewlock repress. Current pressure predictions show that this timing will provide the ISS with the N2 partial pressure desired at undocking and may delete a tweak N2 Repress on FD11.

4. REPLACE PAGES 2-34, 2-36 AND 3-104 THROUGH 3-111.

No Exercise During Day Passes

**REPLANNED**

12/18/06 05:30:33

GMT 12/18/06 (352) 14 15 16 17 18 19 20 21 22 23 12/19 01

MET Day 008 12 13 14 15 16 17 18 19 20 21 22 23 009/00

**FD10**

| | | |
|---|---|---|
| STS-116 | CDR/R2 POLANSKY | SLEEP; POST SLEEP; FESHT; COMM; POST SLEEP; INHBT; PADOIU ACT; P/TV 07 S/U; EXERCISE; FENS2-T; *; P/TV07 EVA OPS; N2* |
| STS-116 | PLT/IV OEFELEIN | SLEEP; POST SLEEP; CAMPOUT EVA PREP; EMU PURGE; EMU PBRTHE; C/L DPRS; P-DPR; IV SUPPORT; P-RPR; REPRS |
| STS-116 | MS1/R1 PATRICK | SLEEP; SDBI; POST SLEEP; 14.7 RPRS; 10.2 DPRS; MCIU^; EXERCISE; 14.7 RPRS; SAW RETRACT SUPPORT; PRE; CRDL; OIU* |
| STS-116 | MS2/EV1 CURBEAM | SLEEP; POST SLEEP; HYGN BREAK/ PREBRTHE; CAMPOUT EVA PREP; EMU PURGE; EMU PBRTHE; C/L DPRS; P-DPR; EGRSS; P6 SAW 4B RETRACT; INGRS; P-RPR; REPRS |
| STS-116 | MS3/EV2 FUGLESANG | SLEEP; POST SLEEP; HYGN BREAK/ PREBRTHE; CAMPOUT EVA PREP; EMU PURGE; EMU PBRTHE; C/L DPRS; P-DPR; EGRSS; P6 SAW 4B RETRACT; INGRS; P-RPR; REPRS |
| STS-116 | MS4 HIGGINBOTHAM | SLEEP; POST SLEEP - SHAB; XFR; UPDAT; TRANSFER; SSRMS OPS; XFER |
| DN | FE-2 REITER | SLEEP (8.5); POST SLEEP; SKN; POST SLEEP; PREP WORK; DPC; THCASM; EXERCISE TVIS; TRANSFER; PEPS; MIDDAY-MEAL; POEMS; IMS EDIT; ♣; RED |
| EXP 14 | ISS CDR LOPEZ-ALEGRIA | SLEEP (8.5); POST SLEEP; CAMPOUT EVA PREP; EMU PURGE; EMU PBRTHE; C/L DPRS; SAW RETRACT SUPPORT |
| EXP 14 | FE-1 TYURIN | SLEEP (8.5); POST SLEEP; PREP WORK; DPC; РОДНИК PUMP; ГАНК; EXERCISE VELO+RED; MIDDAY-MEAL; ⊕; СОЖ MNT; EXERCISE TVIS |
| UP | FE-2/EV3 WILLIAMS | SLEEP (8.5); POST SLEEP; PREP WORK; DPC; IWIS S/U; EXERCISE RED; PMC; SSRMS OPS; XFER |

6:30 Hours

DAY/NIGHT

ORBIT 135 136 137 138 139 140 141 142 143

TDRS W -171 E -46 Z -275

ORB ATT BIAS -XLV -ZVV

NOTES

^FILTER CK

*INIT

♣CMS-RED-INSP

⊕СОГС-БФ-СО2-MNT *TERM

*DEACT

GMT 12/19/06 (353) 02 03 04 05 06 07 08 09 10 11 12 13

MET Day 009 009/00 01 02 03 04 05 06 07 08 09 10 11 12

| | | | | | | | | | | | | | | | | | | | | | | | | |
|---|---|---|---|---|---|---|---|---|---|---|---|---|---|---|---|---|---|---|---|---|---|---|---|---|
| STS-116 | **FD10** CDR/R2 POLANSKY | FESI-I | | IMU | | PRE | SLEEP | PMC A/G | PRE SLEEP | | | | FESI-T | PRE SLEEP | | | | | | | | | | SLEEP |
| | PLT/IV OEFELEIN | POST EVA W/H2O & MTX | | | | | | | | PRE SLEEP | | | | | | | | | | | | | | SLEEP |
| | MS1/R1 PATRICK | RNDZ TOOLS C/O | | | | | | | PRE SLEEP | | | | | | | | | | | | | | | SLEEP |
| | MS2/EV1 CURBEAM | POST EVA W/H2O & MTX | | | | | TOOL CONFG | | | PRE SLEEP | | | | | | | | | | | | | | SLEEP |
| | MS3/EV2 FUGLESANG | POST EVA W/H2O & MTX | | | | | TOOL CONFG | | | PRE SLEEP | | | | | | | | | | | | | | SLEEP |
| | MS4 HIGGINBOTHAM | XFER | | | | XFER | TAGUP | XFER | BREF | PRE SLEEP - SHAB | | | | | | | | | | | | | | SLEEP |
| DN | FE-2 REITER | RED | | | | XFER | TAGUP | PREP WORK | | DPC | PREP WORK | | | PRE SLEEP | | | | | | | | | | SLEEP (8.5) |
| EXP 14 | ISS CDR LOPEZ-ALEGRIA | POST EVA W/H2O & MTX | | | | | | | EXDL | PLCK | PREP WORK | | | PRE SLEEP | | | | | | | | | | SLEEP (8.5) |
| | FE-1 TYURIN | EXERCISE TVIS | | | | | PREP WORK | | | DPC | PREP WORK | | | PRE SLEEP | | | | | | | | | | SLEEP (8.5) |
| UP | FE-2/EV3 WILLIAMS | XFER | IWIS | DEACT | JRNL | | PREP WORK | | | DPC | PREP WORK | | | PRE SLEEP | | | | | | | | | | SLEEP (8.5) |

DAY/NIGHT

ORBIT 143 144 145 146 147 148 149 150

TDRS W -171 E -46 Z -275

ORB ATT BIAS -XLV -ZVV

NOTES

# STS-116 FD 10

**REPLANNED**

GMT Date 12/18 (352) | T D R S W E Z | O R B | MET Day 008 | STS ATI

CDR Polansky | PLT Oberpfaffenhofen | MS1 Patrick | Notes

12:00 — SLEEP (CDR, PLT, MS1)

POST-SLEEP ACTIVITY (ORB OPS, CREW SYS) — CDR

POST-SLEEP ACTIVITY (ORB OPS, CREW SYS) — PLT

SALIVA COLL & SLEEP LOG (ORB OPS, SDBI)
POST-SLEEP ACTIVITY (ORB OPS, CREW SYS) — MS1

**FD10 EZ ACTIVITES**
Check TEPC Status
Hard Reboot PGSCs (Except WVS)
OCAC Filter Inpect

13:00

SUPPLY WATER DUMP USING FES [F]
EVA COMM CONFIG(EVA,EVA PREP)Steps 1 & 5 only
POST-SLEEP ACTIVITY (ORB OPS, CREW SYS) — CDR

EVA SYS:2.320 10.2 PSIA CAMPOUT
EVA PREP
Step 1 not required
REF MSG 105 — PLT

[F] SUPPLY WATER DUMP USING FES (ORB OPS, ECLS)
On MCC GO: Step 1 using FES PRI A
REF MSG 111

14:00

EVA 4 INHIBIT PAD
REF MSG 102 — CDR

L17 Check MCIU filter screen — MS1

15:00

SSP1 OIU PWR - OIU 1 ON, √tb-UP — CDR

EVA SYS: 1.220 EMU PURGE — PLT

TFL 199

EXERCISE — MS1

16:00

BIAS-XLV-ZVV

14:00 15:00 16:00 17:00

135 136 137

# STS-116 FD10

**REPLANNED**

GMT Date 12/18 (352) | TDRS W E Z | ORB | MET Day 008 | STS ATI | MS2 Curbeam | MS3 Fuglesang | MS4 Higginbotham | Notes

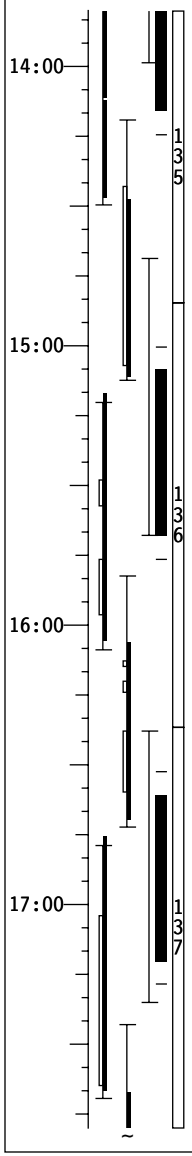


12:00

SLEEP | SLEEP | SLEEP

POST-SLEEP ACTIVITY (ORB OPS, CREW SYS) | POST-SLEEP ACTIVITY (ORB OPS, CREW SYS) | POST-SLEEP ACTIVITY (ORB OPS, CREW SYS)

SH POST-SLEEP CONFIG (SH OPS, ON-ORBIT)

13:00

EVA SYS: 2.315 HYGIENE BREAK | EVA SYS: 2.315 HYGIENE BREAK

BIAS-XLV-ZVV

14:00

EVA SYS:2.320 10.2 PSIA CAMPOUT
EVA PREP
Step 1 not required
REF MSG 105

EVA SYS:2.320 10.2 PSIA CAMPOUT
EVA PREP
Step 1 not required
REF MSG 105

15:00

DAILY TRANSFER LIST UPDATE
REF MSG 110

EVA SYS: 1.220 EMU PURGE | EVA SYS: 1.220 EMU PURGE

TRANSFER
REF Transfer List

16:00

# STS-116 FD10

**REPLANNED**

GMT Date 12/18 (352) | TDRS W E Z | ORB | MET Day 008 | STS ATI | CDR Polansky | PLT Oberpfaffenhofen | MS1 Patrick | Notes

18:00 19:00 20:00 21:00

138 139 140

16:00 17:00 18:00 19:00 20:00

BIAS-XLV-ZVV

**CDR Polansky**

P/TV07 EVA
(PHOTO/TV, SCENES)
Perform SETUP

EXERCISE

SUPPLY WATER DUMP USING FES F
N2 RPRS USING PAYLD N2 VLVS (ORB OPS, ECLS)
Perform Steps 1-6 using parens. Step 5 is √ only. MCC will TMBU limits.

P/TV07 EVA
(PHOTO/TV, SCENES)
Perform OPS

**PLT Oberpfaffenhofen**

EVA SYS: 1.225 EMU PREBREATHE

EVA SYS: CREWLOCK DPRSS/RPRSS
CUE CARD

POST DEPRESS
IVA SUPPORT EVA 4
REF MSG 102,103

**MS1 Patrick**

EXERCISE

SAW RETRACT SUPPORT
REF MSG 102,103

**Notes**

F SUPPLY WATER DUMP USING FES
(ORB OPS, ECLS)
On MCC GO: Step 2 w/FES PRI A reqd
REF MSG 111

UPLINK
β0 + Box C1
-18<AZ<46
-65<EL<75
Box C2
-38<AZ<-3
-28<EL<44
Box C3
-72<AZ<-27
-13<EL<40
Box E4
-18<AZ<120
0<EL<90

# STS-116 FD10

**REPLANNED**

GMT Date 12/18 (352) | TDRS W E Z | ORB | MET Day 008 | STS ATI | MS2 Curbeam | MS3 Fuglesang | MS4 Higginbotham | Notes

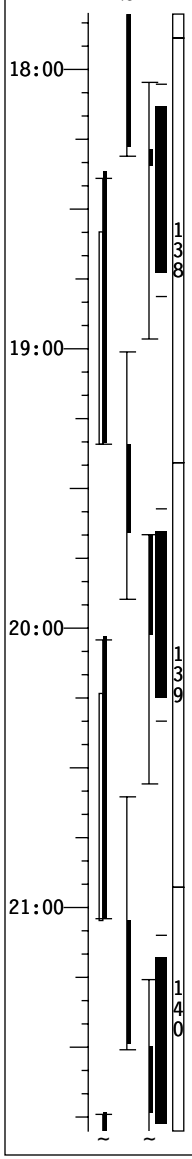


16:00 – 20:00

| MS2 Curbeam | MS3 Fuglesang | MS4 Higginbotham |
|---|---|---|
| EVA SYS: 1.225 EMU PREBREATHE | EVA SYS: 1.225 EMU PREBREATHE | |
| EVA SYS: CREWLOCK DPRSS/RPRSS<br>CUE CARD | EVA SYS: CREWLOCK DPRSS/RPRSS<br>CUE CARD | TRANSFER<br>REF Transfer List |
| POST DEPRESS<br>EGRESS | POST DEPRESS<br>EGRESS | |
| P6 SAW 4B RETRACT<br>REF MSG 102,103 | P6 SAW 4B RETRACT<br>REF MSG 102,103 | P6 4B SOLAR ARRAY RTRCT EVA SPT<br>REF MSG 091 |

BIAS - XLV - ZVV

# STS-116 FD 10

**REPLANNED**

GMT Date 12/18 (352) | TDRS W E Z | ORB | MET Day 008 | STS ATI

CDR Polansky | PLT Oberpfaffenhofen | MS1 Patrick | Notes

20:00 — 21:00 — 22:00 — 23:00 — 00:00

22:00 — 23:00 — 00:00 — 01:00

ORB: 140, 141, 142, 143

BIAS -XLV -ZVV

**CDR:**

P/TV07 EVA
(PHOTO/TV, SCENES)
Perform OPS

N2 RPRS USING PAYLD N2 VLVS
(ORB OPS,ECLS) Perform Steps 7 & 9-12 using parens. MCC will TMBU limits.

**PLT:**

IVA SUPPORT EVA 4
REF MSG 102,103

PRE-REPRESS
EVA SYS: CREWLOCK DPRSS/RPRSS
CUE CARD

**MS1:**

SAW RETRACT SUPPORT
REF MSG 102,103

MNVR TO SRMS PRECRADLE
REF MSG 081 Step 3

On MCC GO:
SSP1 OIU PWR - OIU 1 OFF, √tb-bp
SSV - OFF

**Notes:**

A
Box C1 -18<AZ<46
-65<EL<75
Box C2 -38<AZ<-3
-28<EL<44
Box C3 -72<AZ<-27
-13<EL<40
Box C5 38<AZ<101
10<EL<65

TFL 184
UPLINK
β21 + Boxes A

# STS-116 FD 10

**REPLANNED**

GMT Date 12/18 (352) | T D R S W E Z | O R B | MET Day 008 | S T S A T I

MS2 Curbeam | MS3 Fuglesang | MS4 Higginbotham | Notes

20:00 — 21:00 — 22:00 — 23:00 — 00:00

22:00 — 23:00 — 00:00 — 01:00

140 — 141 — 142 — 143

BIAS -XLV -ZVV

P6 SAW 4B RETRACT
REF MSG 102,103

P6 SAW 4B RETRACT
REF MSG 102,103

P6 4B SOLAR ARRAY RTRCT EVA SPT
REF MSG 091

INGRESS

INGRESS

TRANSFER
REF Transfer List

PRE-REPRESS
EVA SYS: CREWLOCK DPRSS/RPRSS
CUE CARD

PRE-REPRESS
EVA SYS: CREWLOCK DPRSS/RPRSS
CUE CARD

# STS-116 FD10

**REPLANNED**

GMT Date 12/19 (353) | TDRS W E Z | ORB | MET Day 009 | STS ATI

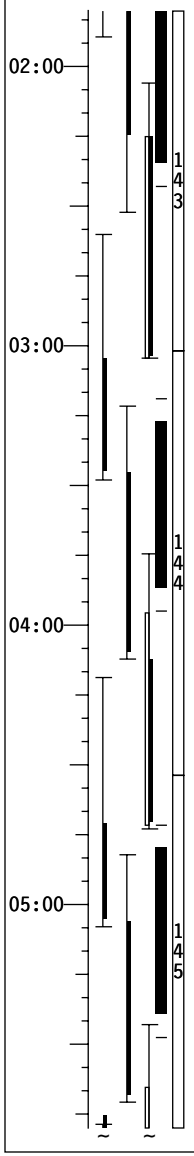

02:00 | 03:00 | 04:00 | 05:00

143 | 144 | 145

## CDR Polansky

00:00 SUPPLY WATER DUMP USING FES F

IMU STAR OF OPPTY ALIGN (ORB OPS, GNC)

01:00 PRE-SLEEP ACTIVITY (ORB OPS, CREW SYS)

PRIVATE MEDICAL CONFERENCE
Perform PMC using Private A/G 2

BIAS-XLV-ZVV

PRE-SLEEP ACTIVITY (ORB OPS, CREW SYS)

02:00

03:00 SUPPLY WATER DUMP USING FES G

PRE-SLEEP ACTIVITY (ORB OPS, CREW SYS)

04:00

## PLT Oberpfaffenhofen

EVA SYS: 1.240 POST EVA
Steps 37,38 & 68 not req'd
Step 39(H2O Recharge)
Step 41(Metox Regen S/N 0017,0019)
REF MSG 092

PRE-SLEEP ACTIVITY (ORB OPS, CREW SYS)

## MS1 Patrick

RNDZ TOOLS CHECKOUT (RNDZ, RNDZ TOOLS)

PRE-SLEEP ACTIVITY (ORB OPS, CREW SYS)

## Notes

F SUPPLY WATER DUMP USING FES (ORB OPS, ECLS) On MCC GO: Step 1 using FES PRI A REF MSG 111

G SUPPLY WATER DUMP USING FES (ORB OPS, ECLS) On MCC GO: Step 2 w/FES PRI A reqd REF MSG 111

# STS-116 FD 10

**REPLANNED**

GMT Date 12/19 (353) | TDRS W E Z | ORB | MET Day 009 | STS ATI | MS2 Curbeam | MS3 Fuglesang | MS4 Higginbotham | Notes

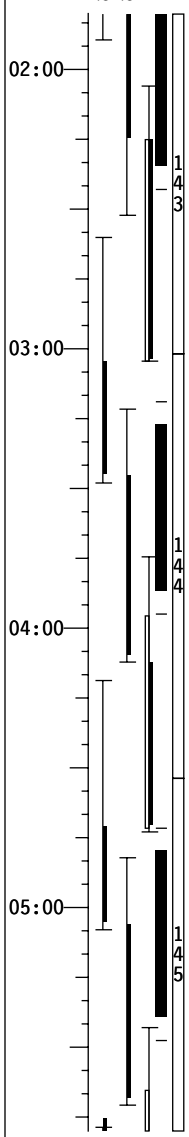


00:00
01:00
02:00
03:00
04:00

BIAS - XLV - ZVV

**MS2 Curbeam**

EVA SYS: 1.240 POST EVA
Steps 37,38 & 68 not req'd
Step 39(H2O Recharge)
Step 41(Metox Regen S/N 0017,0019)
REF MSG 092

EVA 4 TOOL CONFIG
REF MSG 102
REF MSG 107, Item 1

PRE-SLEEP ACTIVITY
(ORB OPS, CREW SYS)

**MS3 Fuglesang**

EVA SYS: 1.240 POST EVA
Steps 37,38 & 68 not req'd
Step 39(H2O Recharge)
Step 41(Metox Regen S/N 0017,0019)
REF MSG 092

EVA 4 TOOL CONFIG
REF MSG 102
REF MSG 107, Item 1

PRE-SLEEP ACTIVITY
(ORB OPS, CREW SYS)

**MS4 Higginbotham**

TRANSFER
REF Transfer List

DAILY STS/ISS CREW TRANSFER TAGUP

DAILY TRANSFER BRIEFING

PRE-SLEEP ACTIVITY
(ORB OPS, CREW SYS)

SH PRE-SLEEP CONFIG
(SH OPS, ON-ORBIT)

Good Morning Discovery!!!!

Thanks for the great day yesterday. Thanks also for all the extra work you did to get us ready for the additional EVA today.

YOUR CURRENT ORBIT IS: 193 X 177 NM

NOTAMS:

EDWARDS (EDW) - LAKEBEDS RED DUE TO RAIN
WHITE SANDS (NOR) – 17/23 GREEN (TOW WAY DAMP @ SOUTH END OF 17)
AMBERLY (AMB) -CLOSED
ANDERSEN (GUA) -06L/24R CLOSED, ALTERNATE 06R/24L
GANDER TACAN (YQX-74X) - AZIMUTH OUT OF SERVICE DME AVAILABLE
KEFLAVIK (IKF) – UNUSABLE
ORMOND BEACH TACAN (OMN-73X) - AZIMUTH OUT OF SERVICE
OCEANA (NTU) – 32R/14L CLOSED
RIO GALLEGOS (AWG) – UNUSABLE
SALSBURY TACAN (SBY-49X) - AZIMUTH OUT OF SERVICE
WAKE ISLAND (WAK) - CLOSED

NEXT 2 PLS OPPORTUNITIES:

NOR17 ORB 141 – 8/21:32 (SCT080 BKN100 BKN250, 200/10P15, CHC SHRA WI 30 NM)
EDW22 ORB 157 – 9/21:49 (FEW120, 030/3P5)

OMS TANK FAIL CAPABILITY:

L OMS FAIL: NO
R OMS FAIL: NO

LEAKING OMS PRPLT BURN:

L OMS LEAK: ALWAYS RETROGRADE
R OMS LEAK: ALWAYS RETROGRADE

OMS QUANTITIES(%)

| | | | |
|---|---|---|---|
| L OMS | OX = 44.1 | R OMS | OX = 45.3 |
| | FU = 44.1 | | FU = 45.8 |

SUBTRACT I’CNCT COUNTER FOR CURRENT OMS QUANTITIES

DELTA V AVAILABLE:

| | |
|---|---|
| OMS | 433 FPS |
| ARCS (TOTAL ABOVE QTY1) | 43 FPS |
| TOTAL IN THE AFT | 476 FPS |
| | |
| ARCS (TOTAL ABOVE QTY2) | 73 FPS |
| FRCS (ABOVE QTY 1) | 35 FPS |
| | |
| AFT QTY 1 | 84 % |
| AFT QTY 2 | 46 % |

THERE ARE NO FAILURE/IMPACT/WORK AROUNDS FOR TODAY.

## EVA 4 SAW SRMS VIEWING

1. SETUP

A7U CCTV – config for EVA 4 SAW SRMS viewing

| | |
|---|---|
| MON 1 | DNLK |
| B | Elbow (EE) |
| MON 2 | DTV |
| P1 LOOB | A |

SM 94 PDRS CONTROL

√PL ID, ITEM 3: 0

√INIT ID, ITEM 24: 0

| | X | Y | Z | PITCH | YAW | ROLL | PL ID |
|---|---|---|---|---|---|---|---|
| √ | -290 | -441 | -464 | 139 | 338 | 173 | 0 |
| | SY | SP | EP | WP | WY | WR | |
| √ | +136.0 | +35.0 | -47.0 | +86.6 | +62.6 | -23.2 | |

2. MNVR TO EVA 4 SAW SRMS VIEWING POSN

SM 94 PDRS CONTROL

END POS – ITEM 18 - 2 3 3 -3 8 7 -3 5 1 EXEC

ATT – ITEM 21 +1 3 0 +3 4 5 +1 8 9 EXEC

CMD CK – ITEM 25 EXEC (GOOD)

RHC RATE – as required (VERN within 10 ft)

BRAKES – OFF (tb-OFF)

MODE – OPR CMD, ENTER (READY lt on)

AUTO SEQ – PROCEED (IN PROG lt on)

When AUTO SEQ IN PROG lt – off:

BRAKES – ON (tb-ON)

| | X | Y | Z | PITCH | YAW | ROLL | PL ID |
|---|---|---|---|---|---|---|---|
| √ | -233 | -387 | -351 | 130 | 345 | 189 | 0 |
| | SY | SP | EP | WP | WY | WR | |
| √ | +142.0 | +8.0 | -25.0 | +90.0 | +50.0 | 0.0 | |

BRAKES – ON (tb-ON)

√MODE – not DIRECT

PARAM – PORT TEMP

JOINT – CRIT TEMP

NOTE

Pan and Tilt Elbow camera as required for EVA SAW retract ops

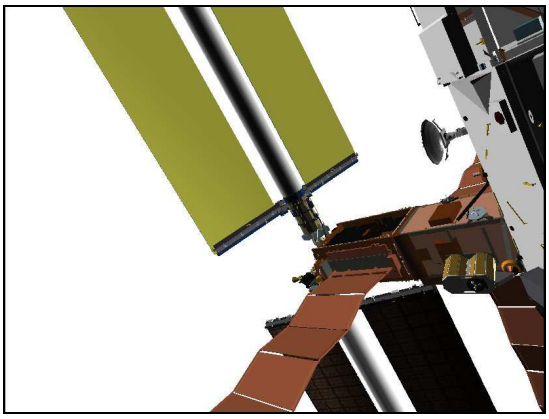

**ELBOW (80,-5)**

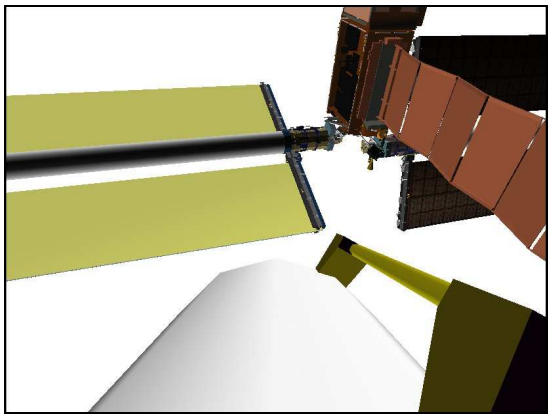

**SRMS EE**

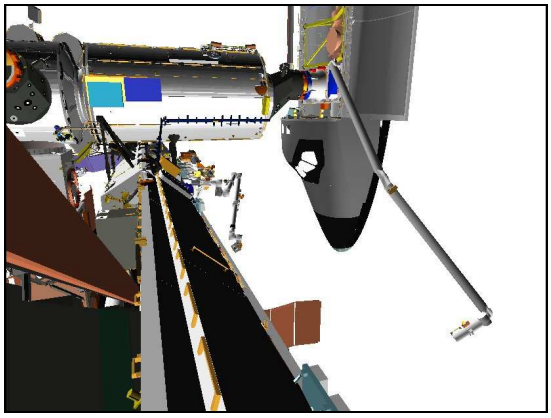

**P1 LOOB (110,-15)**

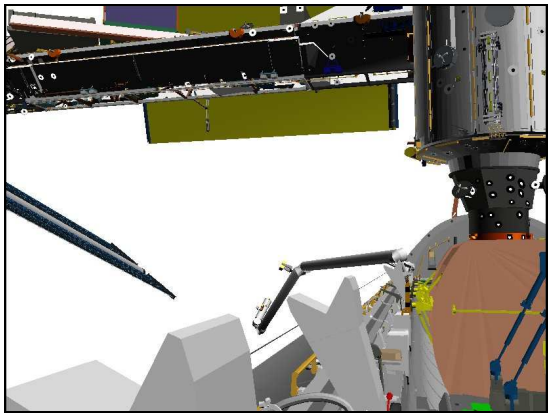

**CCTV B (-15,5)**

NOTE

When EVA 4 SAW retract viewing is complete, maneuver to SRMS Pre-Cradle position

3. MNVR TO SRMS PRE-CRADLE POSN

RATE – as required (VERN within 10 ft)
BRAKES – OFF (tb-OFF)
MODE – SINGLE, ENTER

Mnvr to SRMS PRE-CRADLE posn:

| | SY | SP | EP | WP | WY | WR | |
|---|---|---|---|---|---|---|---|
| EVA 4 SAW Viewing | +142.0 | +8.0 | -25.0 | +90.0 | +50.0 | 0.0 | |
| 1: WY – | | | | | 0.0 | | |
| 2: WP – | | | | +5.0 | | | |
| 3: SP + | | +25.0 | | | | | |
| 4: SY – | 0.0 | | | | | | |
| Pre-Cradle | 0.0 | +25.0 | -25.0 | +5.0 | 0.0 | 0.0 | |
| | X | Y | Z | PITCH | YAW | ROLL | PL ID |
| | -1261 | -146 | -551 | 5 | 2 | 0 | 0 |

BRAKES – ON (tb-ON)
√MODE – not DIRECT
PARAM – PORT TEMP
JOINT – CRIT TEMP

Good morning Joanie, Nick, and STS-116 & Increment 14 crews!

We wanted to thank you again for all your hard work. You've definitely earned your tasty reward (remind Roman he can use them as straws)!

As requested, we've provided you with a list of all items you should complete today (ref choreography below). There's not much left!

**Transfer Status:** Based on yesterday's conversation, you are currently 94% complete with resupply and 90% complete with return, for a total of **92% complete for all transfer ops**.

The Transfer List Excel file, FD10_Transfer_List_STS116.xls, is located on the KFX machine in **C:\OCA-up\transfer.**

For ISS, the Transfer List Excel file, FD10_Transfer_List_STS116.xls, is located in **K:\OCA-up\transfer.**

**<u>Transfer Notes</u>**

- Item 811 is the additional failed LHA we discussed in last night's tag-up. Please cover the LHA pins with kapton tape for protection.

- FYI…MMACS sent you the latest Middeck 5 MLE return configuration drawings today. Remember to remove and temp stow the following items from Bag F prior configuring the bag for return: Thomas' parachute (not 'pair of shoes') and his ACES suit accessories (boots, gloves, g-suit, LCVG, and comm carrier).

- Please report the serial numbers of the CTBs you retrieve from ISS to stow items 774 and 775.

- Below is a photo of an RJMC Cover (items 775.2 and 775.3). Per Jeff Williams, "check the airlock overhead up behind the stowage on the forward side."

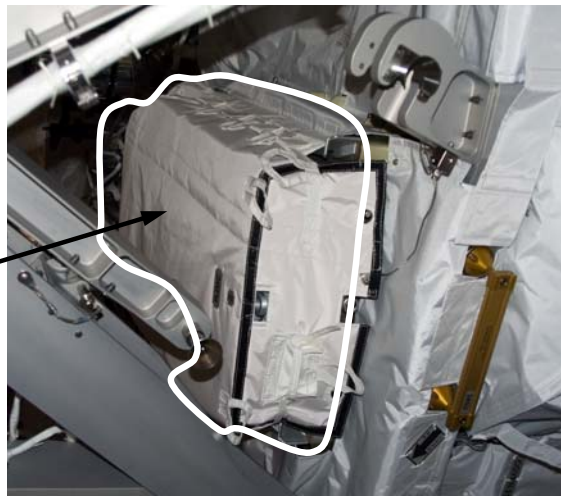

**<u>FD10 Transfer Choreography</u>**

**The following items should be completed today:**

**MDDK:**
**Items 7, 8 and 10**: AFD PCS, RSAD, and SPARE laptops
**Item 707**: POEMS foam cushion
**Item 710.3**: Plug Attach Bolts
**Items 810 and 810.1**: DCS760 Camera and 1.0GB Flash cards

**SPACEHAB:**
**Item 620**: Reiter crew preference bag
**Item 752**: AGB foam
**Items 774, 774.1, and 774.2**: Potassium Citrate Kit & Reiter's Treadmill Harness
**Items 775.2 and 775.3**: RJMC Covers
**Items 803 and 804**: L-A and Misha crew preference bags
**Item 811**: LHA

**The following items should be completed today after EVA 4:**

**SPACEHAB:**
**Item 433 and 630**: LAB condensate CWC (s/n 1026)
**Item 773.4**: Adjustable Fuse Tether

**Please incorporate uplink pages as follows (we've listed the updates in the order they printed out for you):**

In the Middeck Transfer List **MDDK RSPLY REALTIME ADDITIONS** tab
Replace the following page:
Page Resupply 6

In the Spacehab Transfer List **RESUPPLY** tab
Replace the following page:
Page Resupply 7

In the Middeck Transfer List **RETURN** tab
Replace the following pages:
Page Return 5
Page Return 6

In the Spacehab Transfer List **RETURN** tab
Replace the following pages:
Page Return 11
Page Return 20

In the Spacehab Transfer List **SPACEHAB RTN REALTIME ADDITIONS** tab
Replace the following page:
Page Return 22

**Changes to the Transfer List are detailed below:**

**MIDDECK RSPLY REAL TIME ADDITIONS**
Item 810 – new item
Item 810.1 – new item

**SPACEHAB RESUPPLY**
Item 102 – updated constraints

**MIDDECK RETURN**
Item 701 – updated comment
Item 702 – updated comment
Item 707 – updated comment

**SPACEHAB RETURN**
Item 416.2 – updated constraint
Item 774.2 – updated comment

**SPACEHAB RTN REALTIME ADDITIONS**
Item 811 – new item

Have a great day!

- The Transfer Team

# STS-116/12A.1 Resupply Transfer List

| Chg Flag | ☑ | FD | Crew Initials | Item # | Item Name | Qty | Initial Stowage | Temp Stowage | Stowage at Undock | Wt (lbs) | PROCEDURES/**Constraints**/ **Comments |
|---|---|---|---|---|---|---|---|---|---|---|---|
| | | | **Middeck Resupply Real Time Additions** | | | | | | | | |
| | ☑ | 8 | | 800 | BCR BATTERY - 4 | 1 ziplock | MD FLOOR STBD 2 (Bag D) | | NOD1O4_A1 (in 0.5 CTB s/n 1189) | | |
| | ☑ | 8 | | 801 | LARGE CUTTER [p/n SEG33106915-303] | 1 | MD FLOOR STBD 1 (Bag C) | | ~~A/L1 Crewlock (in Crew Lock Staging Bag, s/n 1002)~~ NODE Handrail | | **Stage in Crew Lock Staging Bag AFTER EVA 3. |
| | ☑ | 9 | | 809 | Tether, Waist (w/slide lock) [P/N SEG33106943-305] [s/n 1058] | 1 | EXT A/L FLOOR BAG | | ISS Airlock Tether Staging Area | 1.10 | |
| X | | | | 810 | DCS760 Camera [p/n SEZ33113001-302, s/n 1013] | 1 | MF43K | STS deployed | ISS crew pref deployed | 3.64 | **Remove card initially in camera and keep on STS for return.** **Item 810.1 will be installed in camera prior to transfer. |
| X | | | | 810.1 | 1GB EVA Flash Card [SEZ33118356-301, s/n crew pref] | 2 | MA16J | | (in above item) | | **Verify all images have been downlinked from these cards.** **Place both cards in DCS760 camera item 810. **Call down s/n of cards. |
| | | | | | | | | | | | |
| | | | | | | | | | | | |
| | | | | | | | | | | | |
| | | | | | | | | | | | |
| | | | | | | | | | | | |

[ ] - notes included by transfer team, - not on actual label

# STS-116/12A.1 Resupply Transfer List

| Chg Flag | ☑ | FD | Crew Initials | Item # | Item Name | Qty | Initial Stowage | Temp Stowage | Stowage at Undock | Wt (lbs) | PROCEDURES/**Constraints**/ **Comments |
|---|---|---|---|---|---|---|---|---|---|---|---|
| | | | **SpaceHab Resupply** | | | | | | | | |
| | | | | **Aft Bulkhead** | | | | | | | |
| | ☑ | 4 | | 100 | ESEL Tools<br>A31p Power Supplies | 1.0 CTB | AC01 | | NOD1D1 | 35.00 | **EVA hdwe removed from this CTB per FD02 timelined procedure EMU AND EVA TRANSFER PREP. |
| | ☑ | 4 | | 101 | RJMC / OGS / EVA | 3.0 CTB | AC04 | | NOD1D2 | 125.00 | **Torque wrench and torque wrench bag removed per FD02 timelined procedure EMU AND EVA TRANSFER PREP. |
| X | | | | 102 | DOUBLE COLDBAG<br>[s/n 1010] | 1 | AC05<br>(inside locker) | LAB1O4<br>(near MELFI) | | 39.00 | **Leave in SH locker until FD11 timelined procedure 12A.1 SAMPLE TRANSFER TO DOUBLE COLDBAG.**<br><br>**Coldbag must remain protected due to kickload constraints.<br><br>**This coldbag will return in mddk containing cold samples (ref item 701). |
| | ☑ | 4 | | 103 | CMG EA<br>H2/N2 Vent Hose Assembly<br>Empty Triple CTB | 3.0 CTB | AC06 | | NOD1D2 | 76.00 | |
| | ☑ | 4 | | 104 | OGS HARDWARE 3 | 1.0 CTB | AC13 | | LAB1D2 Rack Front | 55.00 | |
| | ☑ | 4 | | 105 | Video Baseband Signal Processor<br>A4 Printer Paper - 4<br>SSPTS EVA Pwr Cable W9300<br>SSPTS EVA Pwr Cable W9301 | 2.0 CTB | AC14 | | LAB1D1 Rack Front | 111.00 | |

# STS-116/12A.1 Return Transfer List

| Chg Flag | ☑ | FD | Crew Initials | Item # | Item Name | Qty | Initial Stowage | Temp Stowage | Stowage at Undock | Wt (lbs) | PROCEDURES/**Constraints**/ **Comments |
|---|---|---|---|---|---|---|---|---|---|---|---|
| | | | | **Non-Prepacked Bags/Items** | | | | | | | |
| | ☑ | 7 | See Swap Tab - ALSP | 700 | ALSP<br>[old]<br>[s/n 1001] | 1 | | See Swap Tab | MD FLOOR STBD 1 (Bag C) | 37.00 | |
| X | | | | 701 | DOUBLE COLDBAG<br>[s/n 1010] | 1 | AC05 (inside locker) | ISS | MF57O | 50.00 | **Do not stow near a heat source.**<br><br>**Filled with icepacs and samples per FD11 timelined PODF procedure 12A.1 SAMPLE TRANSFER TO DOUBLE COLDBAG.<br><br>**This coldbag launched in SH (ref item 102). Will remain in SH until required for sample gathering to protect against kickloads. |
| X | | | | 702 | EMU<br>[s/n 3015] | 1 | ISS A/L | | EXT A/L | 280 | ~~**Configured for return per FD07 timelined procedures PRE EVA3 EMU RESIZE and POST EVA TRANSFER AND RECONFIG~~<br>**Transfer after EVA4. |
| | ☑ | 5 | See Swap Tab - EMU H2O | 703 | EMU WATER PROCESSING KIT<br>[with returning contents] | 1.0 CTB | | See Swap Tab | MD FLOOR STBD 2 (Bag D) | 0.50 | |
| | ☑ | 5 | See Swap Tab - EMU H2O | 420 | Return Item 420<br>[ISS EMU Water Processing Kit contents] | 1 Mesh Bag | | See Swap Tab | MD FLOOR STBD 2 (in 1.0 CTB) | 24.00 | |

[ ] - notes included by transfer team, - not on actual label

# STS-116/12A.1 Return Transfer List

| Chg Flag | ☑ | FD | Crew Initials | Item # | Item Name | Qty | Initial Stowage | Temp Stowage | Stowage at Undock | Wt (lbs) | PROCEDURES/**Constraints**/ **Comments |
|---|---|---|---|---|---|---|---|---|---|---|---|
| | ☑ | 4 | See Swap Tab - IELK | 704 | IELK<br>[T. Reiter] | 1 | | See Swap Tab | MD CEILING PORT 2 (Bag B) | 64.00 | |
| | ☑ | 4 | See Swap Tab - IELK | 704.1 | KENTAVR | 1 | | See Swap Tab | Crew worn | 3.00 | |
| | ☑ | 9 | | 705 | LEG SIZING RINGS, 1.5"<br>[white nomex pouch] | 1 | | MA9G | EXT A/L FLOOR BAG | 0.25 | **Pouch launched in MDDK and was temp-stowed on FD02 per item 4.<br><br>**Stow item 705.1 in this pouch. |
| | ☑ | 9 | | 705.1 | Leg Sizing Rings<br>[s/n 125 and 126] | 1 ziplock | A/L1O1 (staged on outside of M-02 Bag s/n 1010) | | EXT A/L FLOOR BAG (inside pouch) | 6.00 | **Stow leg sizing rings in pouch (ref item 705). |
| | ☑ | 7 | See Swap Tab - Multimeter | 706 | Multimeter<br>[old]<br>[Henrietta, b/c 4SS00242J] | 1 | | See Swap Tab | MF43G | 1.40 | |
| X | | | | 707 | POEMS foam cushion<br>[s/n 008] | 1 | LAB1O2_J2 | | MD FLOOR PORT 1 (Bag F) | 0.30 | **Do not stow near a heat source.**<br><br>**Remove POEMS sample (s/n 013) from MELFI per FD10 timelined procedure PODF POEMS SAMPLE CANISTER REMOVAL FROM MELFI. |

[ ] - notes included by transfer team, - not on actual label

# STS-116/12A.1 Return Transfer List

| Chg Flag | ☑ | FD | Crew Initials | Item # | Item Name | Qty | Initial Stowage | Temp Stowage | Stowage at Undock | Wt (lbs) | PROCEDURES/**Constraints**/ **Comments |
|---|---|---|---|---|---|---|---|---|---|---|---|
| | ☑ | 6 | | 416 | Return Item 416<br>[21 Progress KURS] | 3.0 CTB | FGB FLOOR | | AP07 | 161.00 | **This CTB will be used for packing return item 416.2 full condensate CWC on FD06. |
| | ☑ | 6 | | 416.1 | 21 Progress KURS | 1 | FGB FLOOR<br>(in 3.0 CTB) | | AS01<br>(in 5MLE bag) | 161.00 | **Remove KURS from 3.0 CTB and pack in 5 MLE bag at AS01 per 5MLE bag dwg on page REF-6 in Reference tab of SH Transfer List.<br><br>**Verify the KURS oval "eyes" are facing the port wall. |
| X | | | | 416.2 | CWC<br>[labeled: condensate]<br>[s/n 6008] | 1<br>(inside KBO-M bag) | | MDDK | AP07<br>(in 3.0 CTB) | ~~73~~<br>58 | **~~At the end of the flight~~ On FD11 after Shuttle Condensate Teardown (after undock), place CWC in one KBO-M bag (p/n 11Ф615.8715-0A15-01) from NOD1O4_B2 before packing in 3.0 CTB.**<br><br>**Fill any remaining open volume in this CTB with clothing or towels.<br><br>**This CWC launched in MDDK. |
| | ☑ | 6 | | 417 | Return Item 417<br>[22 Progress KURS] | 3.0 CTB | FGB FLOOR | | AC04 | 161.00 | **Before strapping to Aft Bulkhead, open CTB and ensure the KURS oval "eyes" are facing the port wall. |
| | ☑ | 5 | | 419 | Return Item 419<br>[ECLSS/SEM] | 1.0 CTB | LAB1D2 | | FP07 | 16.00 | **Do not stow until item 419.1 and 419.2 have been added to this CTB.** |
| | ☑ | 5 | | 419.1 | PBA Oxygen Reducer/Cylinder Assembly<br>[old]<br>[s/n 1009] | 1 | NOD1S2-14<br>(PEP Locker) | | FP07<br>(in 1.0 CTB) | 3.42 | **Transfer on FD05 per timelined activity FDS-PBA-XFER.**<br><br>**Remove Mask (s/n 1002) from old PBA [s/n 1009]. Attach mask to new PBA [s/n 1024]. Call MCC-H to confirm mask attached to new PBA.**<br><br>**New PBAs launch as item 118.1.1 and 118.1.2. |
| | ☑ | 5 | | 419.2 | PBA Oxygen Reducer/Cylinder Assembly<br>[old]<br>[s/n 1012] | 1 | LAB1P0<br>(PEP Locker) | | FP07<br>(in 1.0 CTB) | 3.42 | **Transfer on FD05 per timelined activity FDS-PBA-XFER.**<br><br>**Remove Mask (s/n 1016) from old PBA [s/n 1012]. Attach mask to new PBA [s/n 1025]. Call MCC-H to confirm mask attached to new PBA.**<br><br>**New PBAs launch as item 118.1.1 and 118.1.2. |

[ ] - notes included by transfer team, - not on actual label

# STS-116/12A.1 Return Transfer List

| Chg Flag | ☑ | FD | Crew Initials | Item # | Item Name | Qty | Initial Stowage | Temp Stowage | Stowage at Undock | Wt (lbs) | PROCEDURES/**Constraints**/ **Comments |
|---|---|---|---|---|---|---|---|---|---|---|---|
| | | | | 774 | Return item 774 | 0.5 CTB | ISS | | FP02 | 2.00 | **Retrieve empty 0.5 CTB from ISS. Ask ISS crew for location.<br><br>**Label CTB as Return Item 774.<br><br>**Pack items 774.1 and 774.2 in CTB. |
| | | | | 774.1 | Potassium Citrate Placebo Kit<br>[p/n SJG46118187-301]<br>[s/n 1039]<br>[b/c HRF06200J] | 1 | SM_245 | | FP02<br>(in 0.5 CTB) | 3.00 | |
| X | | | | 774.2 | Treadmill Harness<br>[p/n SEG46120250-301]<br>[s/n 1008]<br>[b/c 00052203J] | 1 | ISS Crew Pref | | FP02<br>(in 0.5 CTB) | 5.00 | **Stow after Reiter's last TVIS Exercise on FD10. |
| X | ☑ | 9 | | 775 | Return item 775 | 1.0 CTB | ISS | | AC01 | 4.00 | **Retrieve empty 1.0 CTB from ISS. Ask ISS crew for location.<br><br>**Label CTB as Return Item 775.<br><br>**Pack items 775.1 and 775.2 in CTB.<br><br>**Thomas stowed an RJMC cap in this CTB on FD09 |
| | ☑ | 9 | | 775.1 | P5 Launch Locks | 6 | ISS EXT | | AC01<br>(in 1.0 CTB) | 8.00 | **Brought inside after EVA 1. |
| | | | | 775.2 | RJMC Cover<br>[p/n 1F82068-1] | 1 | NOD1D4_K2<br>(in 1.0 CTB: Broken/Expired Items, s/n 1080) | | AC01<br>(in 1.0 CTB) | 6.00 | |
| | | | | 775.3 | RJMC Cover<br>[p/n 1F82068-501] | 1 | NOD1D4_K2<br>(in 1.0 CTB: Broken/Expired Items, s/n 1080) | | AC01<br>(in 1.0 CTB) | 6.00 | |

[ ] - notes included by transfer team, - not on actual label

# STS-116/12A.1 Return Transfer List

| Chg Flag | ☑ | FD | Crew Initials | Item # | Item Name | Qty | Initial Stowage | Temp Stowage | Stowage at Undock | Wt (lbs) | PROCEDURES/**Constraints**/ **Comments |
|---|---|---|---|---|---|---|---|---|---|---|---|
| | | | **SpaceHab Return Realtime Additions** | | | | | | | | |
| | ☑ | 9 | | 802 | CH 2/3 H-Jumper<br>[Channel 1/4 H-Jumper Cable]<br>P/N R082151-1 | 1.0 CTB | ISS External | | FC03 | | **Retrieve empty 1.0 CTB from ISS for packing CH 2/3 H-Jumper.<br><br>**Removed from "Return to Shuttle 3" jettison stowage bag per item 773.3. |
| | | | | **803** | L-A Crew Pref | 0.5 CTB | | | FC12 | | **Report CTB S/N to MCC-H. |
| | | | | **804** | Tyurin Crew Pref | 0.5 CTB | | | FC01 | | **Report CTB S/N to MCC-H. |
| | ☑ | 8 | | 807 | Lamp Housing Assembly, General<br>[P/N 219010]<br>[s/n 0239] | 1 | LAB1O5_G | | AS03 | 2.76 | |
| X | | | | 811 | Lamp Housing Assembly, General<br>[P/N 219010]<br>[s/n 0023] | 1 | LAB1P5_C1 | | AS03 | 2.76 | |
| | | | | | | | | | | | |
| | | | | | | | | | | | |

[ ] - notes included by transfer team, - not on actual label

Today you will perform a Supply Water Dump using the FES in the morning and another FES Dump in the evening (two separate dumps). FES Dumps are not allowed during solar array retract operations.

**FES Dump Details**

The morning FES Dump duration will be 4 hours, and the evening FES Dump duration will be 3 hours. Due to constraints with ISS momentum management, it is important that the dump initiations and terminations occur on time. Check MCC prior to initiating and terminating the FES Dumps. The following details are required for the dump:

At MET 8/13:30, initiate SUPPLY WATER DUMP USING FES (ORB OPS, ECLS), p. 5-9, Step 1 DUMP INITIATION, using FES PRI A.

At MET 8/17:30, terminate the morning FES dump on MCC call using Step 2, DUMP TERMINATION; FES PRI A is req'd.

At MET 9/00:00, initiate SUPPLY WATER DUMP USING FES (ORB OPS, ECLS), p. 5-9, Step 1 DUMP INITIATION, using FES PRI A.

At MET 9/03:00, terminate the evening FES dump on MCC call using Step 2, DUMP TERMINATION; FES PRI A is req'd.

BAG F/MD Floor PORT 1

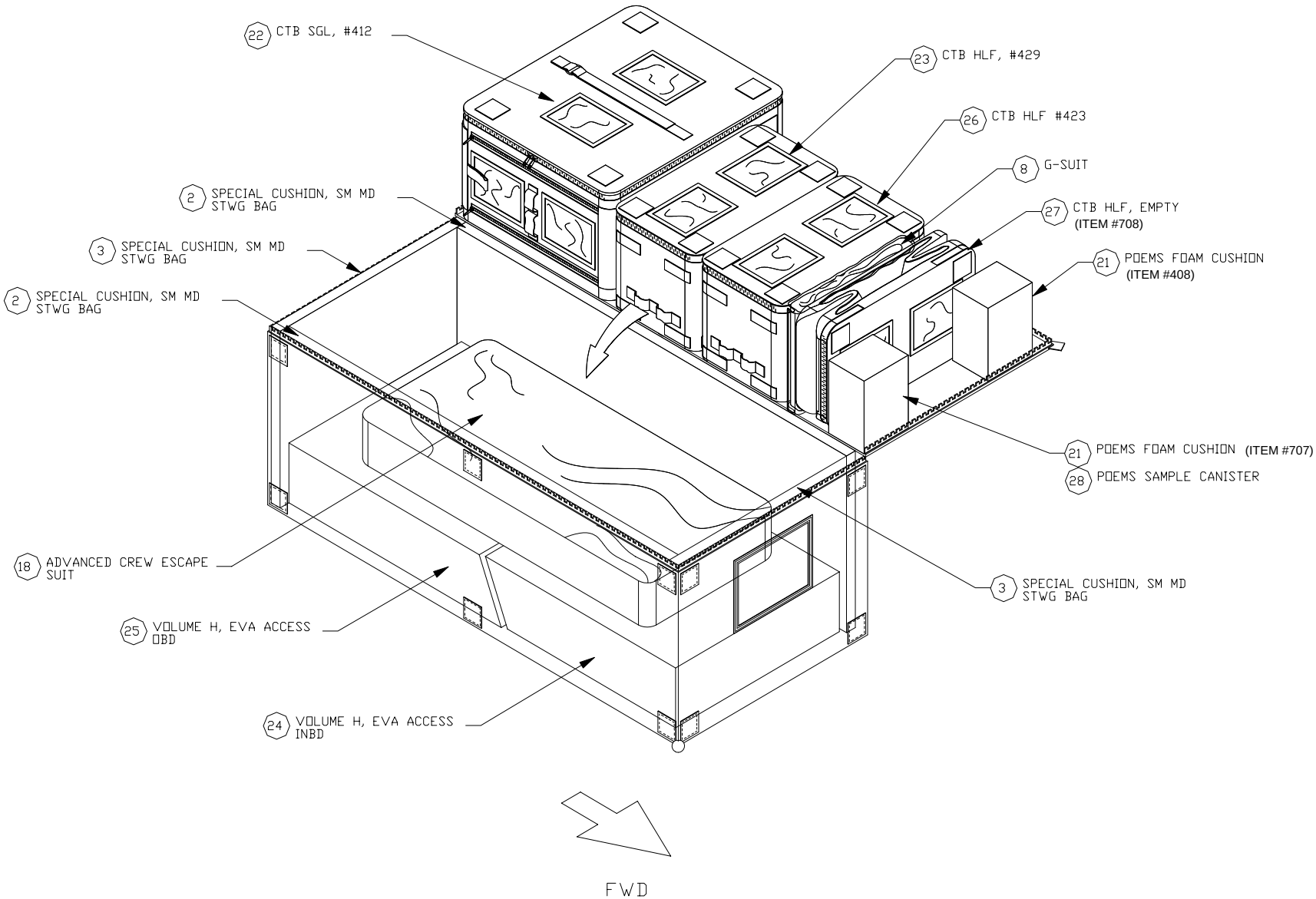

BAG SH/MD Floor Port 2

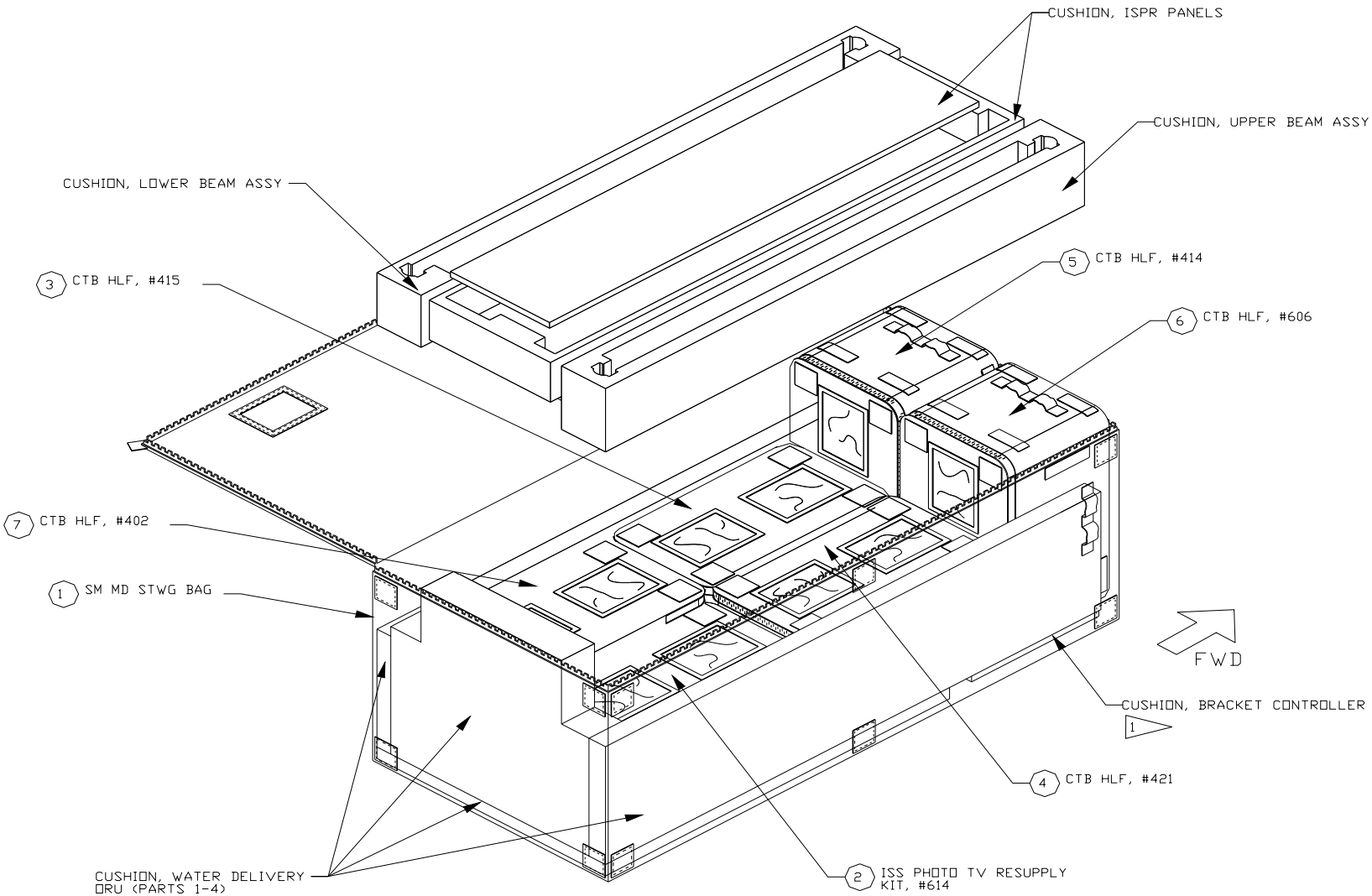

BAG C/MD Floor STBD 1

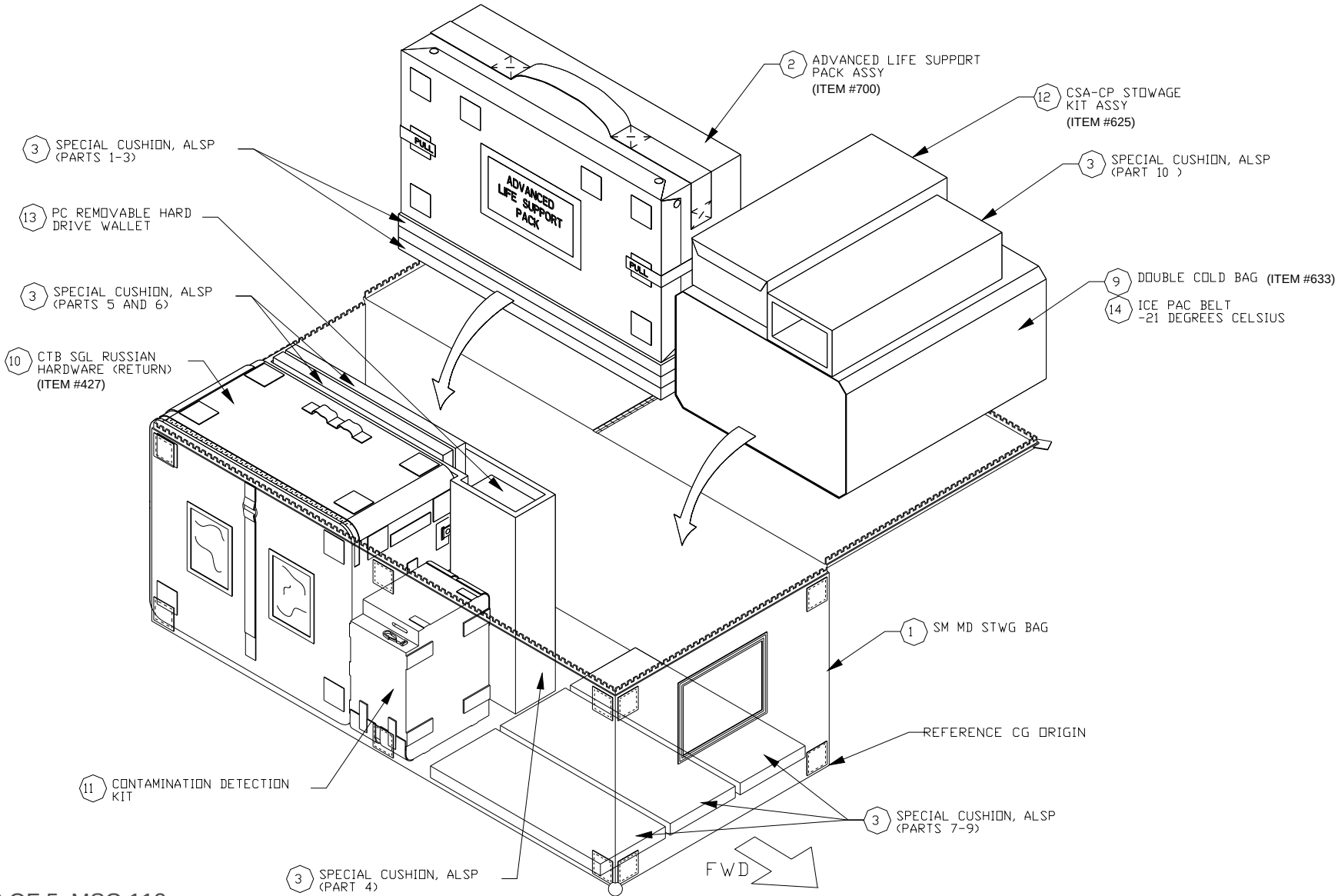

BAG D/MD Floor STBD 2

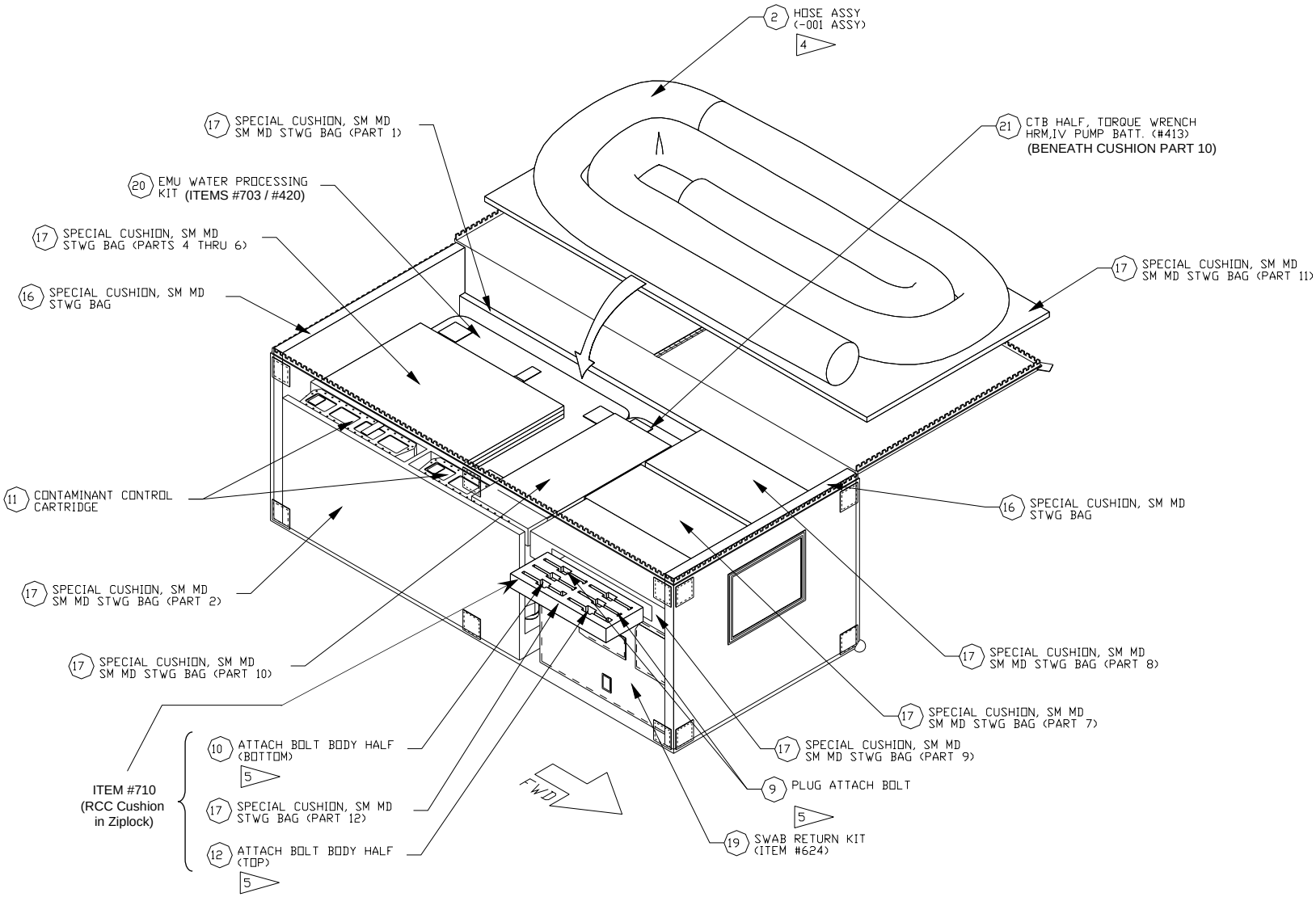

EXT A/L Floor Bag

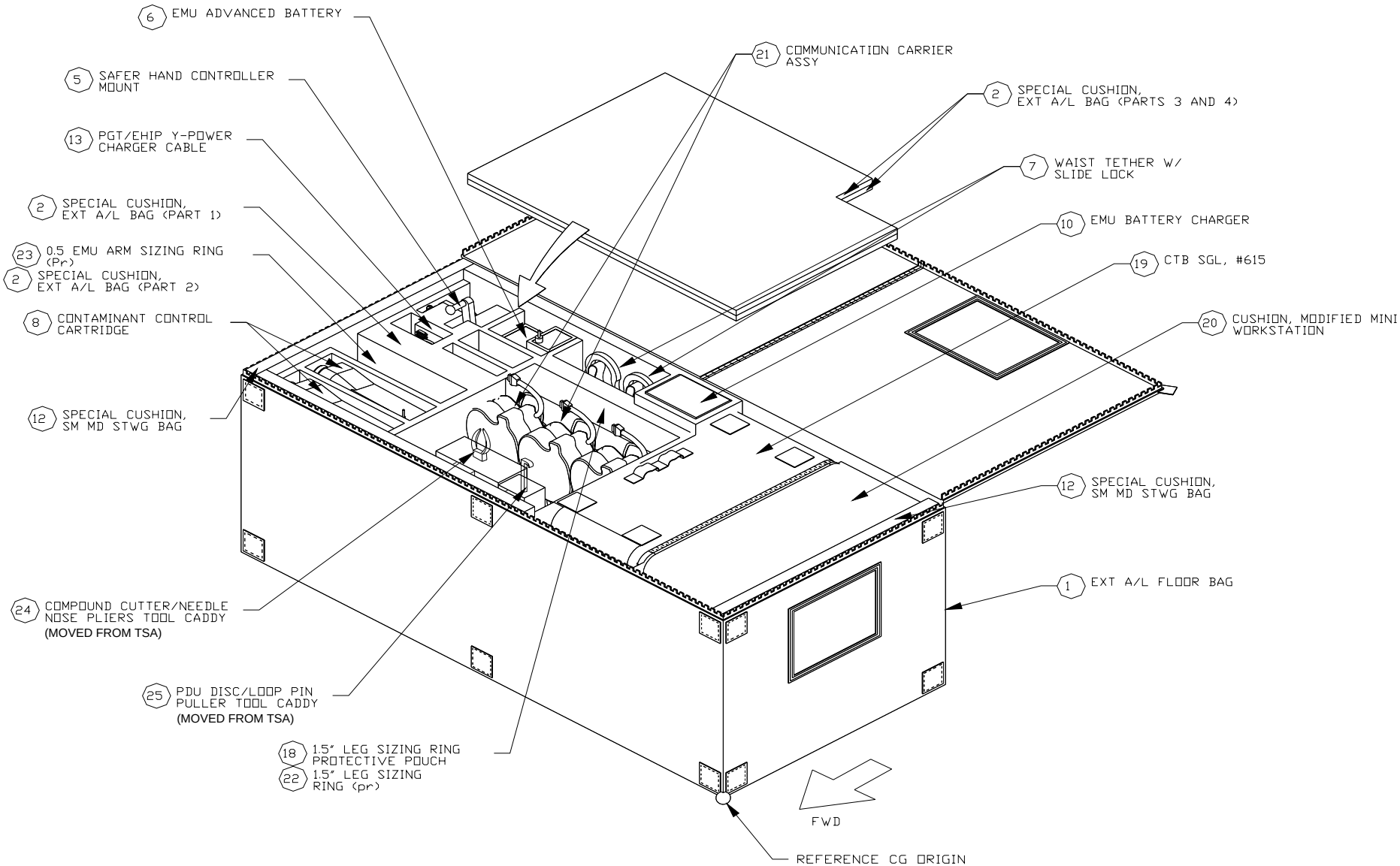

The FD9 MMT was brief today. The main focus was the EVA 4 strategy and a discussion of whether the EVA should still be performed based on what was learned with the P6 array during EVA 3. The EVA camera bracket and orbiter systems status/anomalies were also discussed. The MMT decided that EVA 4 remains a very beneficial activity and will be conducted on FD10 as planned. The EVA timeline management will be left to the crew and the ops team as briefed to you during the FD9 EVA tag up.

The team was very appreciative of your outstanding work on EVA 3 including the P6 array shake and retract technique.

**EVA 4 Rationale** - The Station Program provided a summary of the EVA 3 blanket box shake technique and the successful retract to the bay 11 position. While a great deal was learned about the array and wire grommet behavior, there may be additional information to learn during the EVA 4 P6 retraction. The team also requires information as to how the array behaves when retracted for the last few bays near the blanket box. Therefore, by performing EVA 4 we will increase the chance of having both P6 arrays latched down by the end of STS-117/13A.

**EVA 4 Bingo Strategy** - The overall strategy for EVA 4 is not to exceed 6.5 hours. However, if P6 retraction is in work and proceeding toward success the team may extend at the discretion of the Flight Director and crew. If P6 retraction efforts are finished early (with or without success), the EVA will be allowed to continue for get-ahead tasks to a maximum EVA duration of 4.5 hours. The potential get ahead tasks are the 2B Digital Photography Survey and the FMS blanket reseating. As always the MCC provided you with the details in the FD9 EVA tag up.

**Lost EVA Camera** - Thanks for the downlink picture of the bayonet bracket with the camera shoe attached. This really helped the team understand that it was not a failure of the bracket/shoe interface or a problem with the release mechanism. The team is working on new torque values for you to use prior to EVA 4 and recommends using the D-Ring as a secondary retention device by tethering the camera. The plan is to leave one of the two Shuttle digital cameras on ISS to increase their inventory. MCC will provide you with the transfer details.

As of the MMT, the camera is in front of the station opening at ~1nm/rev. After the undock sep burn on FD 11 it will be approximately 100 nm in front of the shuttle opening over 50 nm/rev, so there is no concern from a long term relative motion perspective.

**DAIU Troubleshooting** - The team has a troubleshooting procedure ready, however, due to EVA 4 there is not sufficient room to add it to an already full timeline. The good news is that this procedure will be ready for use on upcoming missions if the failure repeats.

**Transfer Status** - As of the MMT approximately 71% of the Middeck and Spacehab transfer is complete. Based on our assessment transfer is ahead of schedule.

**ISS N2 Transfer** - This was completed on FD9 with a total of 49 lbs transferred to ISS.

**Cryo Margins** - The cryo margins are approximately 2 hours O2 limited for a 13+1 day mission. Since this reflects only 2 deorbit opportunities on each day the team is working to build margin to allow for 3 deorbit opportunities for both EOM and EOM+1 should that be required.

**Solar Activity** - The solar activity remains at high levels and is similar to what has been noted over the past couple of days. EVA 4 is in a good location in terms of ground track, there are no plans to alter the EVA, and it will be managed within the existing flight rules.