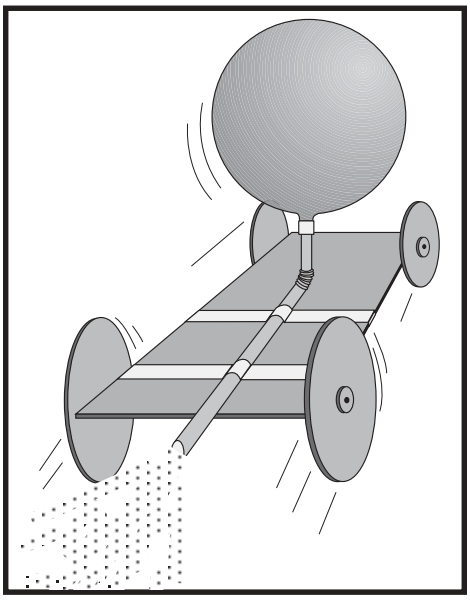

Educator Information

Rocket Racer

Objectives:

- To construct a rocket propelled vehicle.
- To experiment with ways of increasing the distance the rocket racer travels.

Description:

Students construct a balloon-powered rocket racer from a styrofoam tray, pins, tape, and a flexible straw, and test it along a measured track on the floor.

Science Standards:

Science as Inquiry
Physical Science - Position and motion of objects
Science and Technology - Abilities of technological design
Unifying Concepts and Processes - Change, constancy, and measurement

Science Process Skills:

Observing
Communicating
Measuring
Collecting Data
Inferring
Making Models
Interpreting Data
Making Graphs
Controlling Variables
Defining Operationally
Investigating

Mathematics Standards:

Mathematics as Problem Solving
Mathematics as Communication
Mathematics as Reasoning
Mathematical Connections
Measurement
Statistics and Probability
Patterns and Relationships

Management:

This activity can be done individually or with students working in pairs. Allow 40 to 45 minutes to complete the first part of the activity. The activity stresses technology education and provides students with the opportunity to modify their racer designs to increase performance. The optional second part of the activity directs students to design, construct, and test a new rocket racer based on the results of the first racer. Refer to the materials list and provide what is needed for making one rocket racer for each group of two students. Styrofoam food trays are available from butchers in supermarkets. They are usually sold for a few cents each or you may be able to get them donated. Students can also save trays at home and bring them to class.

Materials and Tools:

- 4 Pins
- Styrofoam meat tray
- Masking tape
- Flexible straw
- Scissors
- Drawing compass
- Marker pen
- Small round party balloon
- Ruler
- Student Sheets (one set per group)
- 10 Meter tape measure or other measuring markers for track (one for the whole class)

If compasses are not available, students can trace circular objects to make the wheels or use the wheel and hubcap patterns printed on page 48. Putting hubcaps on both sides of the wheels may improve performance.

If using the second part of the activity, provide each group with an extra set of materials. Save scraps from the first styrofoam tray to build the second racer. You may wish to hold drag or distance races with the racers. The racers will work very well on tile floors and carpeted floors with a short nap. Several tables stretched end to end will also work, but racers may roll off the edges.

Although this activity provides one rocket racer design, students can try any racer shape and any number, size, and placement of wheels they wish. Long racers often work differently than short racers.

Background Information:

The Rocket Racer is a simple way to observe Newton's Third Law of Motion. (Please refer to pages 15-16 of the rocket principles section of this guide for a complete description.) While it is possible to demonstrate Newton's Law with just a balloon, constructing a rocket racer provides students with the opportunity to put the action/reaction force to practical use. In this case, the payload of the balloon rocket is the racer. Wheels reduce friction with the floor to help racers move. Because of individual variations in the student racers, they will travel different distances and often in unplanned directions. Through modifications, the students can correct for undesirable results and improve their racers' efficiency.

Making a Rocket Racer:

1. Distribute the materials and construction tools to each student group. If you are going to have them construct a second racer, tell them to save styrofoam tray scraps for later. Hold back the additional materials for the second racer until students need them.
2. Students should plan the arrangement of parts on the tray before cutting them out. If you do not wish to use scissors, students can trace the pattern pieces with the sharp point of a pencil or a pen. The pieces will snap out of the styrofoam if the lines are pressed deeply.
3. Lay out a track on the floor approximately 10 meters long. Several metric tape measures joined together can be placed on the floor for determining how far the racers travel. The students should measure in 10 centimeter intervals.
4. Test racers as they are completed. Students should fill in the data sheets and create a report cover with a drawing of the racer they constructed.
5. If a second racer will be constructed, distribute design pages so that the students can design their racers before starting construction.

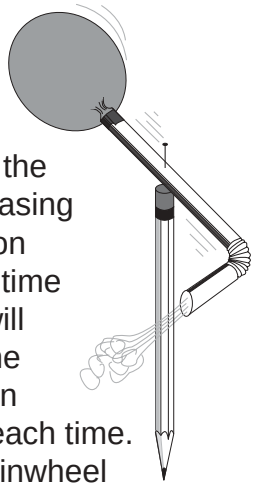

Extensions:

- Hold Rocket Racer races.
- Tie a loop of string around the inflated balloon before releasing the racer. Inflate the balloon inside the string loop each time you test the racers. This will increase the accuracy of the tests by insuring the balloon inflates the same amount each time.
- Make a balloon-powered pinwheel by taping another balloon to a flexible straw. Push a pin through the straw and into the eraser of a pencil. Inflate the balloon and watch it go.

Assessment:

Students will create "Rocket Racer Test Reports" to describe test runs and modifications that improved their racer's efficiency. Use these reports for assessment along with the design sheet and new racer, should you choose to use the second part of this activity.

How To Build A Rocket Racer

1. **Lay out your pattern on a styrofoam tray. You need 1 car body, 4 wheels, and 4 hubcaps. Use a compass to draw the wheels.**

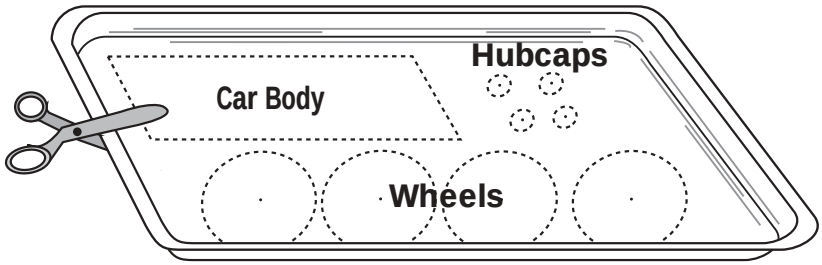

2. **Blow up the balloon and let the air out. Tape the balloon to the short end of a flexible straw and then tape the straw to the rectangle.**

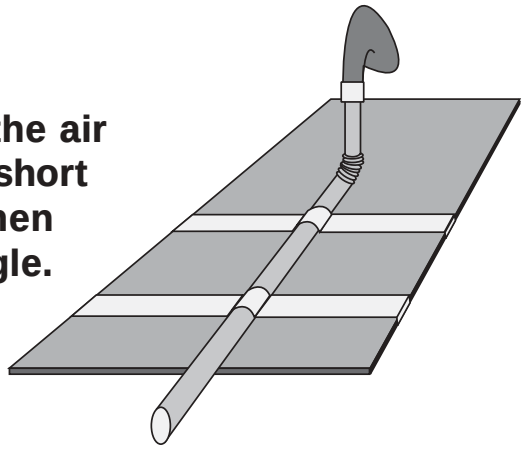

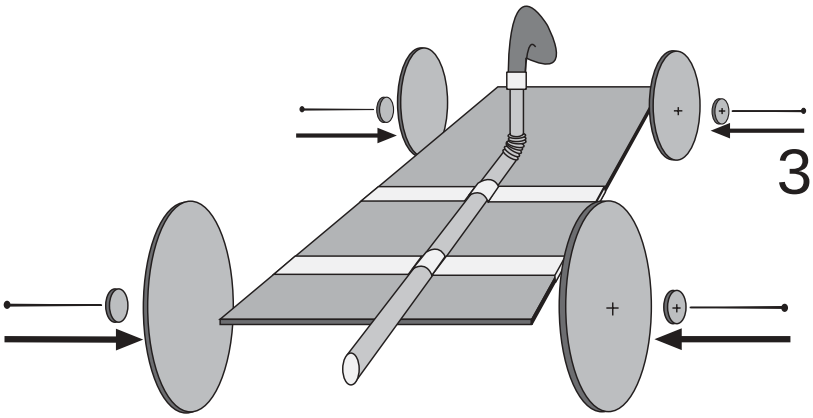

3. **Push pins through the hubcaps into the wheels and then into the edges of the rectangle.**

4. **Blow up the balloon through the straw. Squeeze the end of the straw. Place the racer on floor and let it go!**

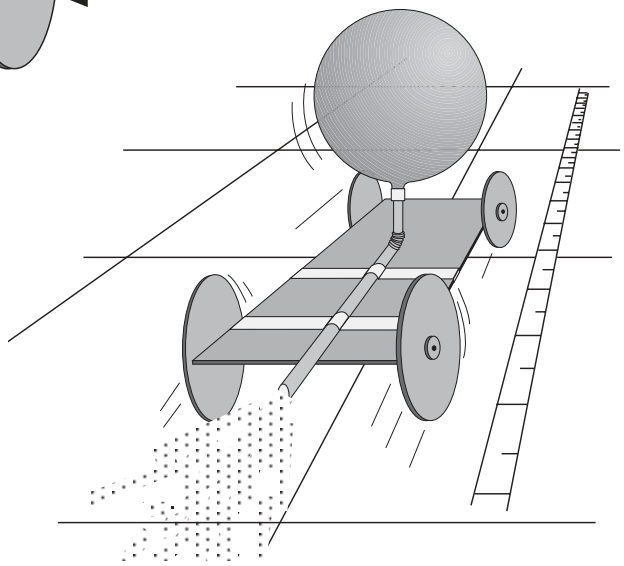

Wheel Patterns

(Crosses mark the centers.)

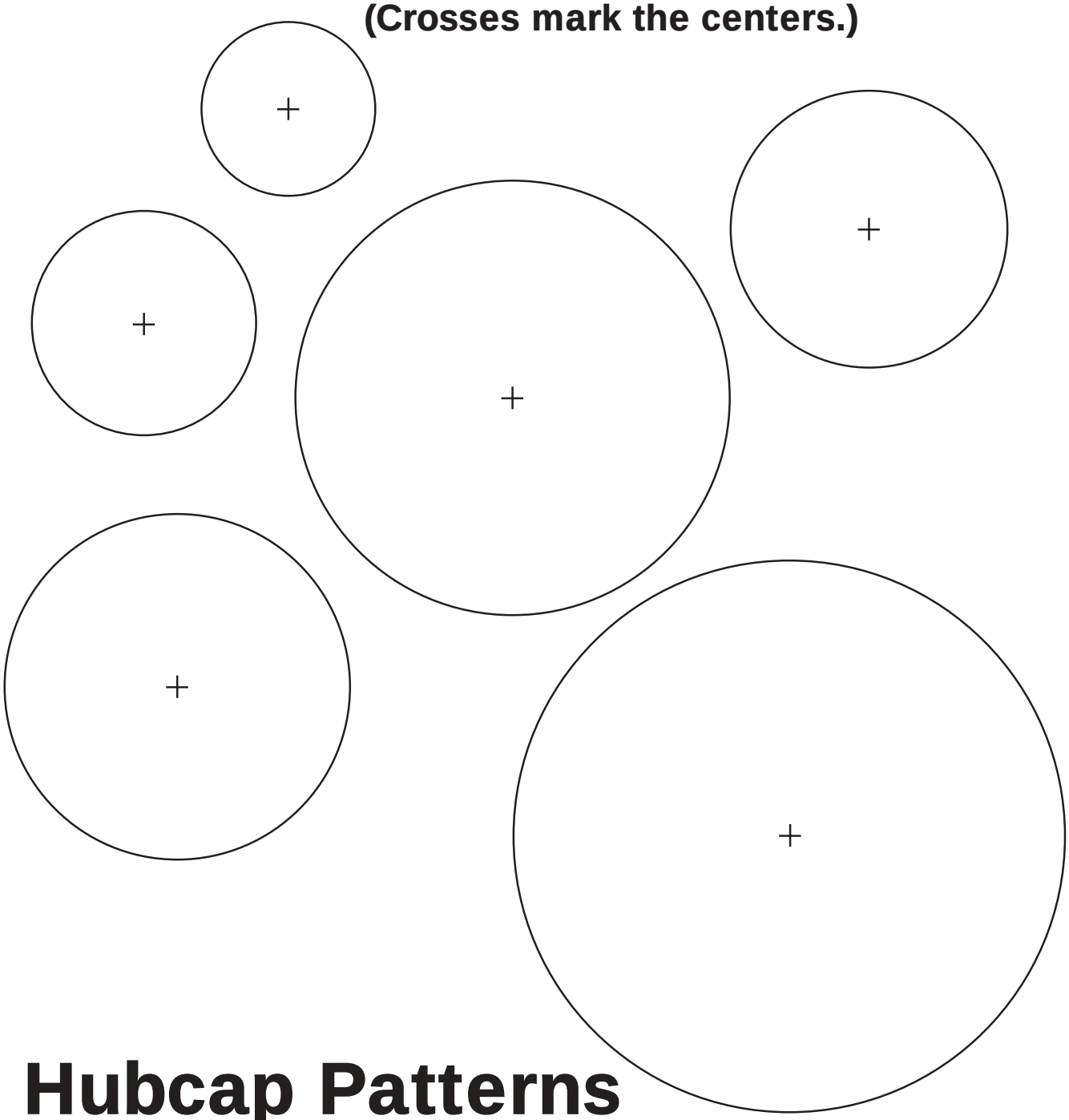

Hubcap Patterns

(Crosses mark the centers.)

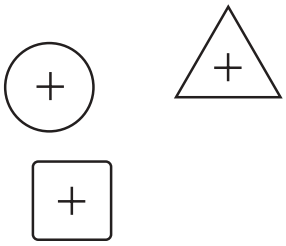

Rocket Racer
Test Report

Draw a picture of your rocket racer.

BY

_____

_____

DATE: _____

Rocket Racer Test Report

Place your rocket racer on the test track and measure how far it travels.

1. Describe how your rocket racer ran during the first trial run.
   (Did it run on a straight or curved path?)

   _____

   How far did it go? _____ centimeters

   Color in one block on the graph for each 10 centimeters your racer traveled.

2. Find a way to change and improve your rocket racer and test it again.

   What did you do to improve the rocket racer for the second trial run?

   _____

   _____

   How far did it go? _____ centimeters

   Color in one block on the graph for each 10 centimeters your racer traveled.

3. Find a way to change and improve your rocket racer and test it again.

   What did you do to improve the rocket racer for the third trial run?

   _____

   _____

   How far did it go? _____ centimeters

   Color in one block on the graph for each 10 centimeters your racer traveled.

4. In which test did your racer go the farthest?_____

   Why? _____

   _____

Rocket Racer Data Sheet

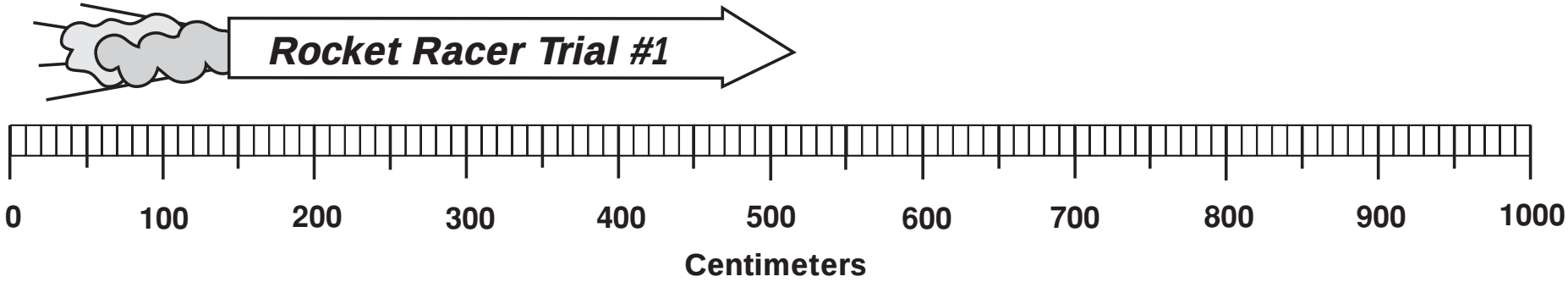

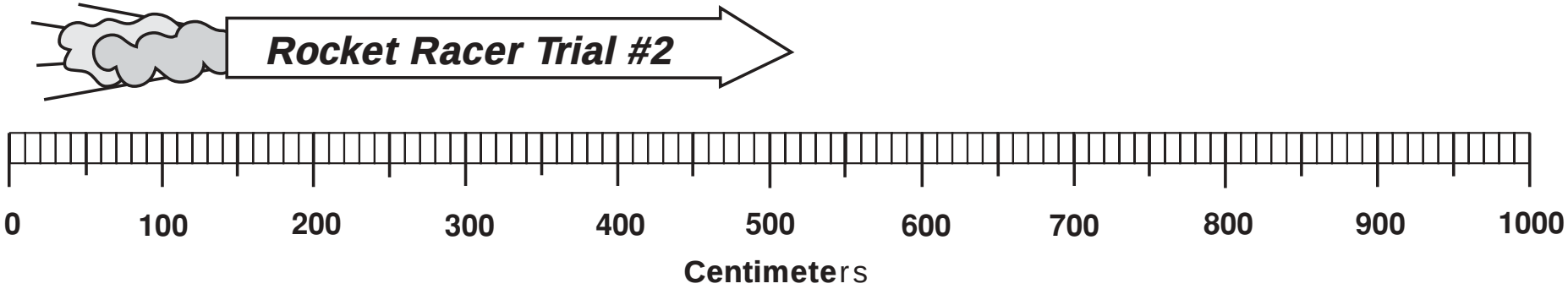

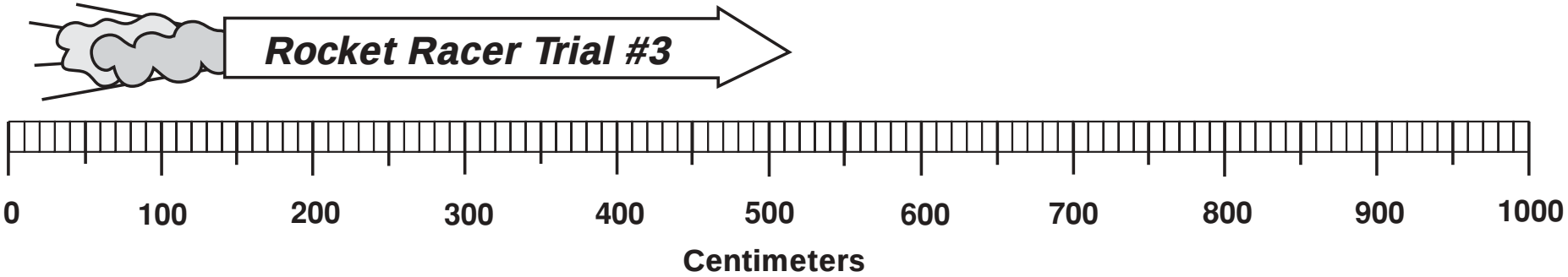

DESIGN SHEET

Design and build a new rocket racer based on your earlier experiments.

Front View

Top View

Side View