Space Shuttle Program
FLIGHT DATA FILE

JSC-48040-123

PDRS Operations Checklist

STS-123 Flight Supplement

Mission Operations Directorate
EVA, Robotics, & Crew Systems Operations Division

Final
February 20, 2008

National Aeronautics and
Space Administration

Lyndon B. Johnson Space Center
Houston, Texas

Verify this is the correct version for the pending operation (training, simulation or flight).
Electronic copies of FDF books are available. URL: http://mod.jsc.nasa.gov/do3/FDF/index.html

MISSION OPERATIONS DIRECTORATE

PDRS OPERATIONS CHECKLIST
STS-123 FLIGHT SUPPLEMENT

FINAL
February 20, 2008

PREPARED BY:

Thomas E. Smith
Book Manager

APPROVED BY:

Aaron D. Goldenthal
Lead, Robotics Systems Group

Franklin S. Markle
Chief, Robotics Operations Branch

This document is under the configuration control of the Crew Procedures Control Board (CPCB). All proposed changes must be submitted via FDF Workflow Crew Procedure Change Request (CR) to DO3/FDF Manager.

Additional distribution of this book, for official use only, may be requested in writing to DO3/PMO Administrator. The request must include justification and requester's name, organization, position, and phone number. Contractor requests are made through the NASA or DOD organization supported. Deletions, reduction in quantity, or change of address may be submitted to DO3/FDF Management Office, 281-244-1184.

Incorporates the following:	
482#:	PDRS FS-0033 PDRS FS-0034(S) PDRS FS-0035(S) PDRS FS-0036(S) PDRS FS-0037 PDRS FS-0038 PDRS FS-0039 PDRS FS-0040(S) PDRS FS-0041A PDRS FS-0043

S – Superseded

AREAS OF TECHNICAL RESPONSIBILITY

Book Manager	DX22/T. Smith	281-483-1595

PDRS OPERATIONS CHECKLIST
STS-123 FLIGHT SUPPLEMENT

LIST OF EFFECTIVE PAGES

FINAL 02/20/08

Sign Off ..... * 123/FIN
FS ii ..... * 123/FIN
FS iii ..... * 123/FIN
FS iv ..... * 123/FIN
FS v ..... * 123/FIN
FS vi ..... * 123/FIN
FS vii 123/FIN
FS viii 123/FIN
FS 1-1 ..... 123/FIN
FS 1-2 ..... 123/FIN
FS 1-3 ..... 123/FIN
FS 1-4 ..... 123/FIN
FS 1-5 ..... 123/FIN
FS 1-6 ..... 123/FIN
FS 1-7 ..... 123/FIN
FS 1-8 ..... 123/FIN
FS 1-9 ..... 123/FIN
FS 1-10 ..... 123/FIN
FS 1-11 ..... 123/FIN
FS 1-12 ..... 123/FIN
FS 1-13 ..... 123/FIN
FS 1-14 ..... 123/FIN
FS 1-15 ..... 123/FIN
FS 1-16 ..... 123/FIN
FS 2-1 ..... 123/FIN
FS 2-2 ..... 123/FIN
FS 2-3 ..... 123/FIN
FS 2-4 ..... 123/FIN
FS 2-5 ..... 123/FIN
FS 2-6 ..... 123/FIN
FS 2-7 ..... 123/FIN
FS 2-8 ..... 123/FIN
FS 2-9 ..... 123/FIN
FS 2-10 ..... 123/FIN
FS 2-11 ..... 123/FIN
FS 2-12 ..... 123/FIN
FS 2-13 ..... 123/FIN
FS 2-14 ..... 123/FIN
FS 2-15 ..... 123/FIN
FS 2-16 ..... 123/FIN
FS 2-17 ..... 123/FIN
FS 2-18 ..... 123/FIN
FS 2-19 ..... 123/FIN
FS 2-20 ..... 123/FIN
FS 2-21 ..... 123/FIN
FS 2-22 ..... 123/FIN
FS 2-23 ..... 123/FIN
FS 2-24 ..... 123/FIN
FS 2-25 ..... 123/FIN
FS 2-26 ..... 123/FIN
FS 2-27 ..... 123/FIN
FS 2-28 ..... 123/FIN
FS 2-29 ..... 123/FIN
FS 2-30 ..... 123/FIN
FS 2-31 ..... 123/FIN
FS 2-32 ..... 123/FIN
FS 2-33 ..... 123/FIN
FS 2-34 ..... 123/FIN
FS 2-35 ..... 123/FIN
FS 2-36 ..... 123/FIN
FS 2-37 ..... 123/FIN
FS 2-38 ..... 123/FIN
FS 2-39 ..... 123/FIN
FS 2-40 ..... 123/FIN
FS 2-41 ..... 123/FIN
FS 2-42 ..... 123/FIN
FS 3-1 ..... 123/FIN
FS 3-2 ..... 123/FIN
FS 3-3 ..... 123/FIN
FS 3-4 ..... 123/FIN
FS 3-5 ..... 123/FIN
FS 3-6 ..... 123/FIN
FS 3-7 ..... 123/FIN
FS 3-8 ..... 123/FIN
FS 3-9 ..... 123/FIN
FS 3-10 ..... 123/FIN
FS 3-11 ..... 123/FIN
FS 3-12 ..... 123/FIN
FS 3-13 ..... 123/FIN
FS 3-14 ..... 123/FIN
FS 3-15 ..... 123/FIN
FS 3-16 ..... 123/FIN
FS 3-17 ..... 123/FIN
FS 3-18 ..... 123/FIN
FS 3-19 ..... 123/FIN
FS 3-20 ..... 123/FIN
FS 3-21 ..... 123/FIN
FS 3-22 ..... 123/FIN
FS 3-23 ..... 123/FIN
FS 3-24 ..... 123/FIN
FS 3-25 ..... 123/FIN
FS 3-26 ..... 123/FIN

* – Omit from flight book

FS 4-1 ..... 123/FIN
FS 4-2 ..... 123/FIN
FS 4-3 ..... 123/FIN
FS 4-4 ..... 123/FIN
FS 4-5 ..... 123/FIN
FS 4-6 ..... 123/FIN
FS 4-7 ..... 123/FIN
FS 4-8 ..... 123/FIN
FS 4-9 ..... 123/FIN
FS 4-10 ..... 123/FIN
FS 4-11 ..... 123/FIN
FS 4-12 ..... 123/FIN
FS 5-1 ..... 123/FIN
FS 5-2 ..... 123/FIN
FS 5-3 ..... 123/FIN
FS 5-4 ..... 123/FIN
FS 5-5 ..... 123/FIN
FS 5-6 ..... † 123/FIN
FS 5-7 ..... 123/FIN
FS 5-8 ..... † 123/FIN
FS 5-9 ..... 123/FIN
FS 5-10 ..... † 123/FIN
FS 5-11 ..... 123/FIN
FS 5-12 ..... † 123/FIN
FS 5-13 ..... 123/FIN
FS 5-14 ..... † 123/FIN
FS 5-15 ..... 123/FIN
FS 5-16 ..... † 123/FIN
FS 5-17 ..... 123/FIN
FS 5-18 ..... 123/FIN
FS 5-19 ..... 123/FIN
FS 5-20 ..... † 123/FIN
FS 5-21 ..... 123/FIN
FS 5-22 ..... † 123/FIN
FS 5-23 ..... † 123/FIN
FS 5-24 ..... † 123/FIN
FS 5-25 ..... † 123/FIN
FS 5-26 ..... 123/FIN
FS 5-27 ..... † 123/FIN
FS 5-28 ..... † 123/FIN
FS 5-29 ..... 123/FIN
FS 5-30 ..... 123/FIN
FS 5-31 ..... 123/FIN
FS 5-32 ..... 123/FIN
FS 5-33 ..... 123/FIN
FS 5-34 ..... † 123/FIN
FS 5-35 ..... 123/FIN
FS 5-36 ..... † 123/FIN
FS 5-37 ..... 123/FIN
FS 5-38 ..... † 123/FIN
FS 5-39 ..... 123/FIN
FS 5-40 ..... † 123/FIN
FS 5-41 ..... 123/FIN
FS 5-42 ..... † 123/FIN
FS 5-43 ..... 123/FIN
FS 5-44 ..... † 123/FIN
FS 5-45 ..... 123/FIN
FS 5-46 ..... 123/FIN
FS 5-47 ..... 123/FIN
FS 5-48 ..... † 123/FIN
FS 5-49 ..... 123/FIN
FS 5-50 ..... 123/FIN
FS 5-51 ..... † 123/FIN
FS 5-52 ..... 123/FIN
FS 5-53 ..... † 123/FIN
FS 5-54 ..... 123/FIN
FS 5-55 ..... † 123/FIN
FS 5-56 ..... 123/FIN
FS 5-57 ..... 123/FIN
FS 5-58 ..... † 123/FIN
FS 5-59 ..... 123/FIN
FS 5-60 ..... † 123/FIN
FS 5-61 ..... 123/FIN
FS 5-62 ..... 123/FIN
FS 6-1 ..... 123/FIN
FS 6-2 ..... 123/FIN
FS 6-3 ..... 123/FIN
FS 6-4 ..... 123/FIN
FS 6-5 ..... 123/FIN
FS 6-6 ..... 123/FIN
FS 6-7 ..... 123/FIN
FS 6-8 ..... 123/FIN
FS 6-9 ..... 123/FIN
FS 6-10 ..... 123/FIN
FS 6-11 ..... 123/FIN
FS 6-12 ..... 123/FIN
FS 6-13 ..... 123/FIN
FS 6-14 ..... 123/FIN
FS 7-1 ..... 123/FIN
FS CC 7-2 ..... 123/FIN
FS CC 7-3 ..... 123/FIN
FS CC 7-4 ..... 123/FIN
FS CC 7-5 ..... 123/FIN
FS CC 7-6 ..... 123/FIN
FS CC 7-7 ..... 123/FIN
FS CC 7-8 ..... 123/FIN
FS CC 7-9 ..... 123/FIN
FS 7-10 ..... 123/FIN

† – Color page in flight book

PDRS CUE CARDS

Title	Ref. Page	Card No.
JLP SJ GRAPPLE – WRIST CCTV OVERLAY	FS CC 7-2	PDRS-9a/123/O/B
JLP SJ INSTALL – CBCS OVERLAY	FS CC 7-3	PDRS-14a/123/O/A
JLP SJ UNGRAPPLE – WRIST CCTV OVERLAY	FS CC 7-4	PDRS-15a/123/O/A
OBSS SJ UNGRAPPLE AT H/O TO STOW – WRIST CCTV OVERLAY	FS CC 7-5	PDRS-16a/123/O/A
JLP CBCS INSTALL OVERLAY	FS CC 7-6	PDRS-11a/123/O/A
OBSS SJ GRAPPLE AT HANDOFF – WRIST CCTV OVERLAY	FS CC 7-7	PDRS-13a/123/O/A
OBSS LDRI SCAN PATTERN CUE CARD – DOCKED STBD & PORT (Front)	FS CC 7-8	PDRS-12a/123/O/A
OBSS LDRI SCAN PATTERN CUE CARD – DOCKED NOSE CAP (Back)	FS CC 7-9	PDRS-12b/123/O/A

This Page Intentionally Blank

CONTENTS PAGE

NOMINAL JLP OPS ..... FS 1-1
JLP GRAPPLE ..... FS 1-2
UNBERTH ..... FS 1-5
INSTALL ..... FS 1-11
UNGRAPPLE ..... FS 1-14

OFF-NOMINAL JLP OPS ..... FS 2-1
SJ JLP GRAPPLE ..... FS 2-2
UNBERTH ..... FS 2-8
INSTALL ..... FS 2-22
UNGRAPPLE ..... FS 2-27
JLP CONTINGENCY REBERTH ..... FS 2-35

OBSS HANDOFF ..... FS 3-1
OBSS HANDOFF FROM SSRMS TO SRMS ..... FS 3-2
SRMS TO SSRMS FOR STOW ..... FS 3-6
SJ OBSS HANDOFF FROM SSRMS TO SRMS ..... FS 3-10
SRMS TO SSRMS FOR STOW ..... FS 3-14
MNVR FROM OBSS H/O FOR STOW TO UNDOCK ..... FS 3-23
CONTINGENCY OBSS REGRAPPLE AT H/O TO STOW ..... FS 3-25

VIEWING SUPPORT ..... FS 4-1
SLP VIEWING ..... FS 4-2
-Y STAR TRACKER CLEAR ..... FS 4-4
SLP VIEWING WITH OBSS ..... FS 4-6
MNVR FROM SLP VIEWING WITH OBSS TO -Y TRACKER CLEAR ..... FS 4-8
MNVR FROM -Y TRACKER CLEAR OR SLP VIEWING WITH OBSS TO UNDOCK ..... FS 4-10

LATE INSPECTION ..... FS 5-1
OBSS LDRI RCC SURVEY – STBD DOCKED ..... FS 5-2
– NOSE CAP DOCKED ..... FS 5-31
– PORT DOCKED ..... FS 5-47

REFERENCE DATA ..... FS 6-1
PL ID 3 – JLP UNBERTH ..... FS 6-2
4 – JLP INSTALL ..... FS 6-3
JLP JOINT ANGLES VS POR COORDINATES ..... FS 6-4
PRLA CONFIGURATION ..... FS 6-6
OBSS HANDOFF JOINT ANGLES VS POR COORDINATES ..... FS 6-7
AUTO SEQUENCES (UPLINK) ..... FS 6-9

CUE CARD CONFIGURATION ..... FS 7-1

This Page Intentionally Blank

NOMINAL JLP OPS

JLP GRAPPLE ..... FS 1-2
UNBERTH ..... FS 1-5
INSTALL ..... FS 1-11
UNGRAPPLE ..... FS 1-14

JLP GRAPPLE

1. SETUP

Verify SSRMS is at APFR INSTALL SETUP posn:

SR	SY	SP	EP	WP	WY	WR
-205.0	-29.2	-51.5	-91.3	-102.8	-160.5	-170.7

A7U

CCTV – config for grapple
– RMS WRIST, zoom 34.0 HFOV
focus 5 ft
Maintain eyepoint ~18 in when using grapple overlay

SM 94 PDRS CONTROL
√PL ID, ITEM 3: 0
√INIT ID, ITEM 24: 0

> CAUTION
> Mid and Aft Payload Bay Flood Lights must be OFF until JLP at Hover position

2. MNVR TO JLP PRE-GRAPPLE POSN

DNLK MON 1	Elbow (EE)
DTV MON 2	B
MON 1 (V10/L)	CP-9 P1 LOOB
MON 2 (V10/R)	A

RHC

RATE – as reqd (VERN within 10 ft)
BRAKES – OFF (tb-OFF)
MODE – SINGLE, ENTER

Mnvr to INTERMEDIATE posn:

SLP Viewing 1: SY – Intermediate

SY	SP	EP	WP	WY	WR	
+125.4	+41.6	-42.6	+35.2	-50.0	-55.6	
+60.0						
+60.0	+41.6	-42.6	+35.2	-50.0	-55.6	
X	Y	Z	PITCH	YAW	ROLL	PL ID
-974	-572	-486	19	11	274	0

SM 94 PDRS CONTROL
END POS – ITEM 18 -1 1 5 1 -1 2 3 -5 0 5 EXEC
ATT – ITEM 21 +2 7 0 +3 1 1 +0 EXEC
CMD CK – ITEM 25 EXEC (GOOD)

MODE – OPR CMD, ENTER (READY lt on)

AUTO SEQ – PROCEED (IN PROG lt on)

When AUTO SEQ IN PROG lt – off:
BRAKES – ON (tb-ON)

PARAM – PORT TEMP
JOINT – CRIT TEMP

Mnvr to JLP PRE-GRAPPLE posn:

X	Y	Z	PITCH	YAW	ROLL	PL ID
-1151	-123	-505	270	311	0	0
SY	SP	EP	WP	WY	WR	
+2.6	+40.2	-47.4	-84.2	-29.4	+16.4	

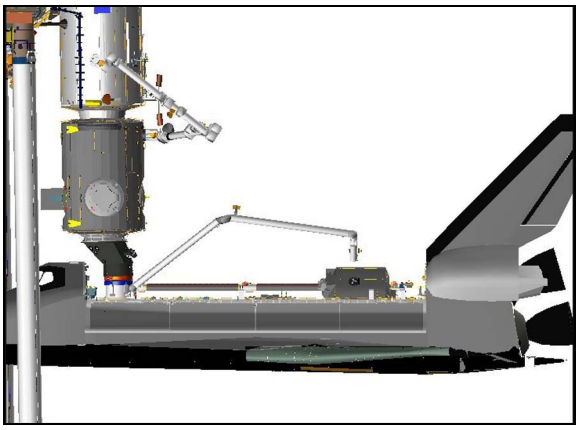

PORT

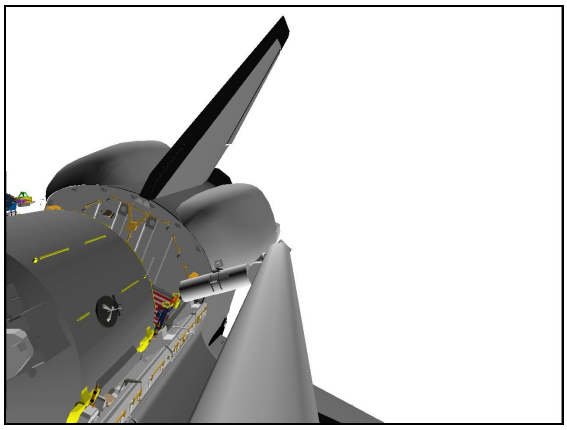

ELBOW (0,0)

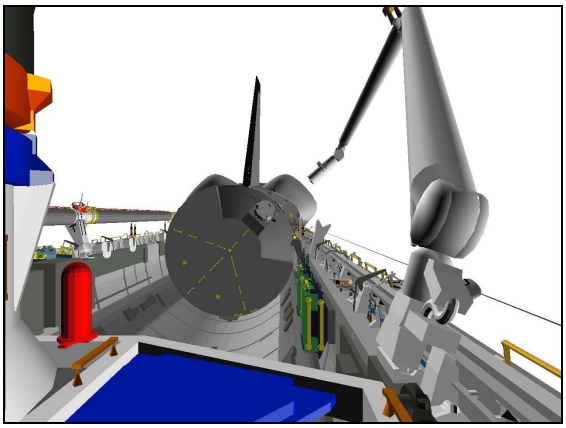

CCTV A (0,0)

3. <u>JLP GRAPPLE</u>
   On EVA GO for JLP Grapple and clear of JLP

DNLK MON 1	Elbow (EE)
DTV MON 2	A
MON 1 (V10/L)	CP-9 P1 LOOB
MON 2 (V10/R)	B

√RATE – VERN (RATE MIN tb-ON)
BRAKES – OFF (tb-OFF)
MODE – END EFF, ENTER
PARAM – Vel X/Y/Z

Mnvr to grapple envelope

<u>CAUTION</u>
Monitor EE tb timing to prevent EE motor burnout

SM 169 PDRS STATUS

EE MODE – AUTO
CAPTURE sw – depress (mom)

	RIGID	CLOSE	CAPTURE
√			
	DERIGID	OPEN	EXTEND

CRITICAL TIMES (28 sec total):
CAPTURE tb – gray, then
CLOSE tb – gray, 3 sec max, then
RIGID tb – gray, 25 sec max

```
*  If manual grapple reqd:                                          *
*      EE MODE          – MAN                                       *
*          CAPTURE sw   – depress (hold until CLOSE tb-gray, 3 sec max) *
*          MAN CONTR    – RIGID (hold until RIGID tb-gray, 25 sec max)  *
```

EE MODE – OFF
BRAKES – ON (tb-ON)

PARAM – PORT TEMP
JOINT – CRIT TEMP

Notify SSRMS operator, SRMS JLP Grapple complete

SM 94 PDRS CONTROL
PL ID, ITEM 3 +3 EXEC
INIT ID, ITEM 24 +3 EXEC

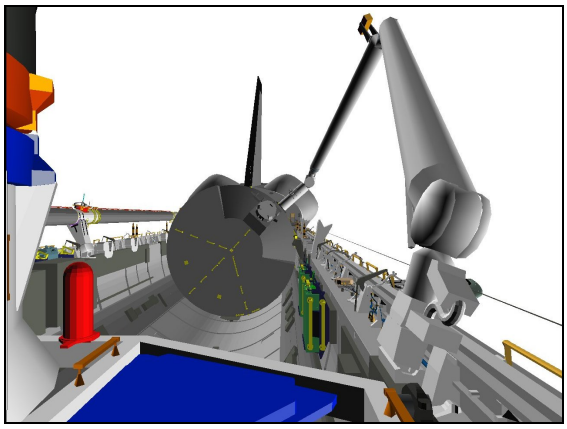

CCTV A (0,0)

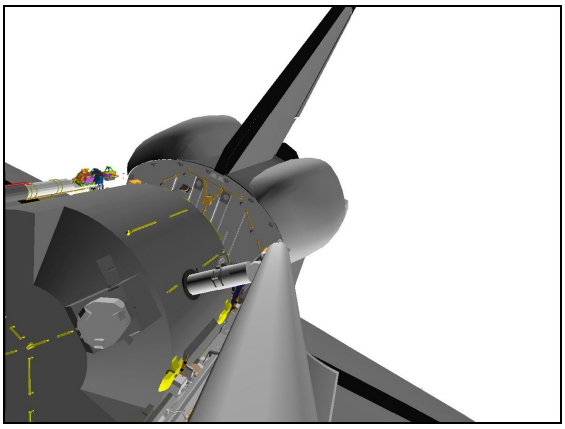

ELBOW (0,0)

Record POS/ATT and Joint Angles:

	X	Y	Z	PITCH	YAW	ROLL	PL ID
							3
Expected	-1161	0	-414	0	0	0	3
	SY	SP	EP	WP	WY	WR	
Expected	-1.8	+36.7	-54.7	-71.0	-29.7	+22.0	

Record POS/ATT and Joint Angles in JLP CONTINGENCY REBERTH (OFF-NOMINAL JLP OPS)

Review GENERIC END EFFECTOR CUE CARD – ISS/SHUTTLE DOCKED OPS

1. SETUP

On SSRMS Operator GO for JLP Unberth and SSRMS at JLP CLEARANCE posn:

SR	SY	SP	EP	WP	WY	WR
-180.0	+65.0	+25.0	+50.0	-18.3	+3.2	+229.4

A7U CCTV – config for unberth

DNLK MON 1	D/A Mux
DTV MON 2	B/C Mux
MON 1 (V10/L)	US Lab (CP-9 P1 LOOB)
MON 2 (V10/R)	Elbow

SM 94 PDRS CONTROL

√PL ID, ITEM 3: 3

√INIT ID, ITEM 24: 3

√BRAKES – ON (tb-ON)

PCS MSS: SSRMS: Thrusters: Thruster Controls for MSS Ops

Verify 'Desat Request' Inhibit

If using Shuttle attitude control:

DAP: FREE

2. ACTIVATE LATCHES

NOTE

When MCA LOGIC switches taken OFF, KU will mode to standby. MPM and MRL tbs – bp

MA73C:A MCA LOGIC MNC MID 2 – OFF

:B MNB MID 4 – OFF

A6U √PL RETEN LAT (five) – OFF

PL SEL – 1

LOGIC PWR SYS 1,2 – ON

R13L BAY MECH PWR SYS 1,2 (two) – ON

SM 97 PL RETENTION

√PL SEL 1 RDY-FOR-LAT 1,2,3,4,5 (ten) – 1

√LAT 1,2,3,4,5 (ten) – 1

* If any rel msw shows '1', *

* expect single motor time (60 sec) *

3. AKA RELEASE

A6U √PL RETEN LAT tb – LAT

√RDY 5 tb – gray

Note single motor times (> 30 sec)

PL RETEN LAT 5 – REL (tb-REL), 60 sec max

– OFF

4. PRLA RELEASE

√PL RETEN LAT 1,2,3,4 (four) tb – LAT
√RDY 1,2,3,4 (four) tb – gray

Note single motor times (> 30 sec)

PL RETEN LAT 1,2 (two) – REL (tb-REL), 60 sec max
– OFF
3,4 (two) – REL (tb-REL), 60 sec max
– OFF

5. DEACTIVATE LATCHES

PL RETEN LOGIC PWR SYS 1,2 (two) – OFF

R13L PL BAY MECH PWR SYS 1,2 (two) – OFF

MA73C:A MCA LOGIC MNC MID 2 – ON
:B MNB MID 4 – ON

6. MNVR TO JLP HOVER POSN

> CAUTION
> Monitor clearances between STBD trunnions and OBSS during unberth with US LAB cam. Minimum clearance of approximately 4.5 inches expected at approx Rel = 129 (Z = -445)

√RATE – VERN (RATE MIN tb-ON)
BRAKES – OFF (tb-OFF)
MODE – ORB LD, ENTER
PARAM – Vel X/Y/Z

Mnvr JLP up until Z = -574

A6U √PL RETEN RDY 1,2,3,4 tb (four) – bp

JLP HOVER posn:

	X	Y	Z	PITCH	YAW	ROLL	PL ID
√	-1161	0	-574	0	0	0	3
	SY	SP	EP	WP	WY	WR	
√	-8.3	+36.1	-22.0	-99.4	-29.4	+29.4	

BRAKES – ON (tb-ON)

NOTE

Configure payload bay flood lights as required

If using Shuttle attitude control and attitude maintenance reqd:
DAP: LVLH
When rates damped:
DAP: FREE > 2 sec
DAP: AUTO
When in attitude and rates damped:
DAP: FREE

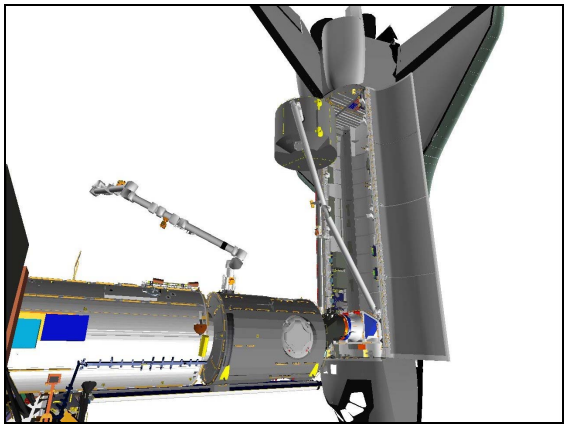

P1 LOOB (120,20)

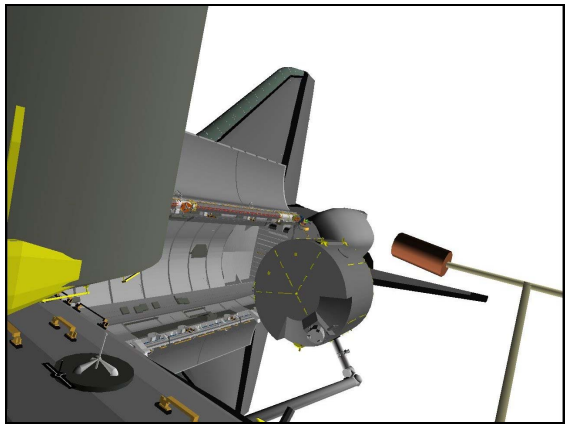

US LAB (-35,-20)

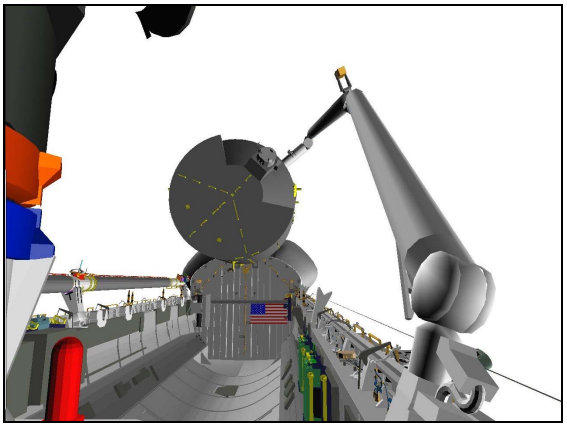

CCTV A (0,10)

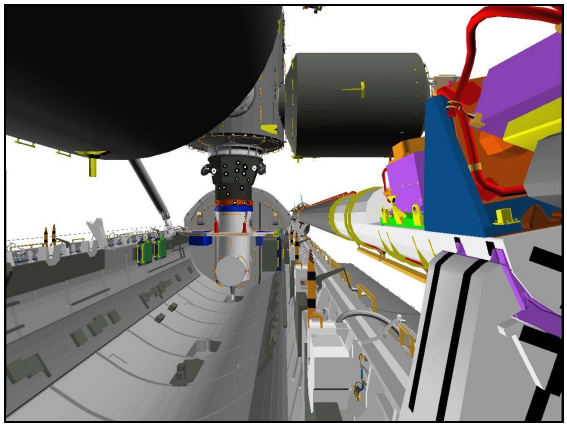

CCTV C (0,0)

7. <u>MNVR TO JLP INTERMEDIATE POSN</u>

DNLK MON 1	A (B)
DTV MON 2	C (Elbow)
MON 1 (V10/L)	CP-9 P1 LOOB (S1)
MON 2 (V10/R)	B (C)

<u>NOTE</u>
Coarse rates allowed between Pts 125 and 128

AUTO 1 – ITEM 13 +<u>5</u> EXEC

√RATE – VERN (RATE MIN tb-ON)
BRAKES – OFF (tb-OFF)

MODE – AUTO 1, ENTER

√START PT, ITEM 17: 124

√READY lt – ON
AUTO SEQ – PROCEED (IN PROG lt on)

Auto Pos #	X/ SY	Y/ SP	Z/ EP	PITCH/ WP	YAW/ WY	ROLL/ WR	PL ID
124	-1161	0	-574	0	0	0	3
	-8.3	+36.1	-22.0	-99.4	-29.4	+29.4	
125	-1184	-103	-861	41	67	14	3
	-13.8	+55.6	-21.4	-30.0	-9.5	+77.2	
126	-1054	-212	-938	243	58	171	3
	-24.4	+71.0	-21.0	-31.3	+39.4	+107.4	
127	-922	-275	-1000	315	346	173	3
	-33.8	+81.2	-20.7	+5.8	+48.9	+164.3	
128	-817	-306	-1017	5	312	200	3
	-59.7	+93.1	-21.5	+23.9	+53.0	+179.2	
129	-774	-282	-1018	105	327	289	3
	-125.3	+96.6	-23.8	+67.0	+37.1	+179.6	
130	-765	-281	-1005	112	339	295	3
	-146.0	+102.9	-35.8	+79.0	+23.9	+179.2	
131	-735	-300	-920	103	344	269	3
	-144.2	+120.3	-74.4	+101.4	+0.3	-180.0	
132	-543	-253	-736	163	335	250	3
	-167.3	+135.1	-134.9	+83.9	-35.9	+179.3	
133	-313	-146	-590	303	333	294	3
	-166.7	+95.2	-98.6	-36.6	-37.5	+178.8	
134	-352	-138	-601	338	353	294	3
	-162.4	+85.5	-79.0	-85.6	-40.0	+179.2	

When AUTO SEQ IN PROG lt – off:
BRAKES – ON (tb-ON)

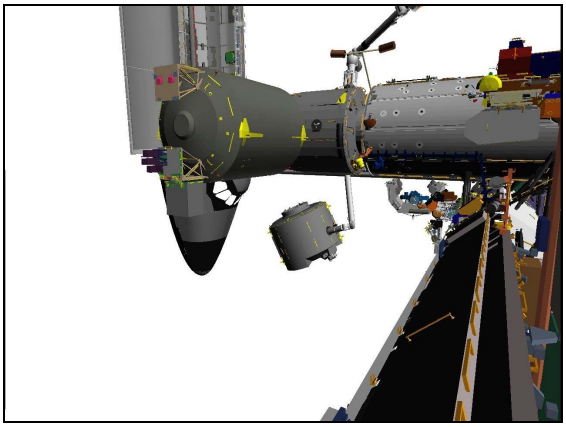

S1 LOOB (60,-10)

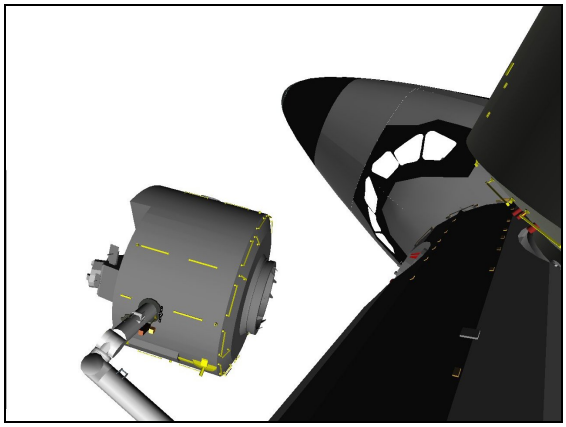

US LAB (-125,-20)

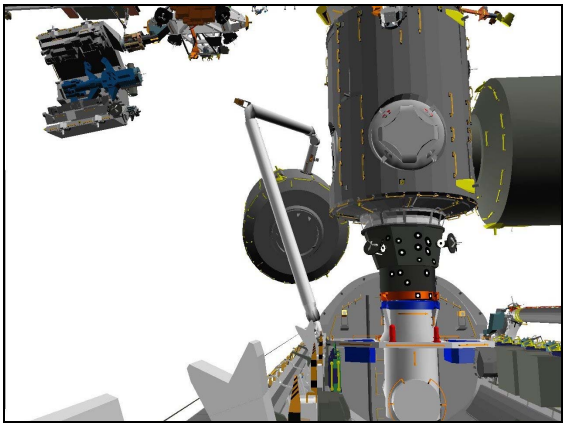

CCTV B (-5,10)

If using Shuttle attitude control and attitude maintenance reqd:
DAP: LVLH
When rates damped:
DAP: FREE > 2 sec
DAP: AUTO
When in attitude and rates damped:
DAP: FREE

8. <u>MNVR TO JLP PRE-INSTALL</u>

DNLK MON 1	Elbow
DTV MON 2	B
MON 1 (V10/L)	S1 LOOB (US LAB)

√RATE – VERN (RATE MIN tb-ON)
BRAKES – OFF (tb-OFF)
MODE – SINGLE, ENTER

Drive WY(+) to +28.5

JLP PRE-INSTALL posn:

	X	Y	Z	PITCH	YAW	ROLL	PL ID
√	-399	-2	-651	0	359	1	3
	SY	SP	EP	WP	WY	WR	
√	-162.4	+85.5	-79.0	-85.6	+28.5	+179.2	

BRAKES – ON (tb-ON)

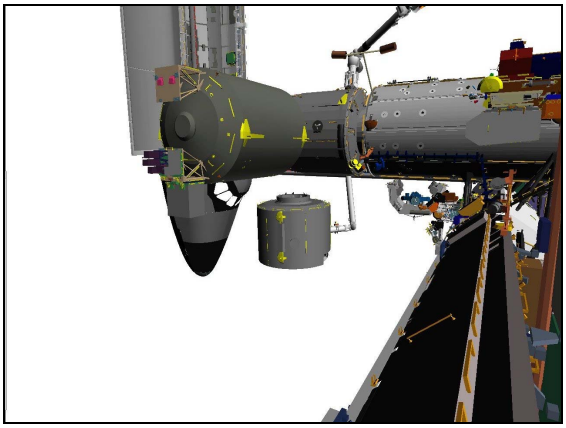

S1 LOOB (60,-10)

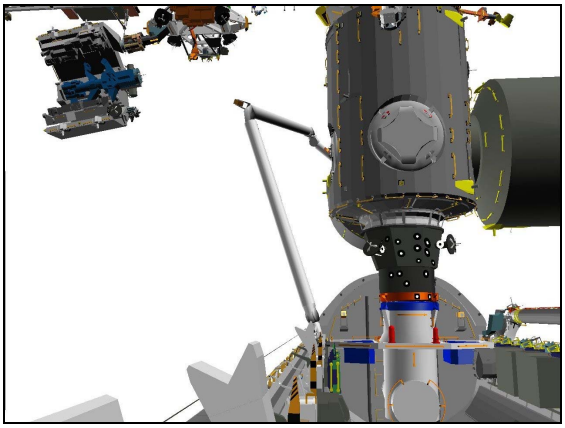

CCTV B (-5,10)

If using Shuttle attitude control and attitude maintenance reqd:

- DAP: LVLH
- When rates damped:
  - DAP: FREE > 2 sec
  - DAP: AUTO
  - When in attitude and rates damped:
    - DAP: FREE

1. SETUP FOR INSTALLATION
   Install JLP CBCS CCTV OVERLAY
   √CBCS setup complete

DNLK MON 1	CBCS
DTV MON 2	Elbow
MON 1 (V10/L)	C
MON 2 (V10/R)	B

SM 94 PDRS CONTROL
PL ID, ITEM 3 +4 EXEC
INIT ID, ITEM 24 +4 EXEC

JLP PRE-INSTALL posn:

	X	Y	Z	PITCH	YAW	ROLL	PL ID
√	-478	0	-636	180	1	89	4
	SY	SP	EP	WP	WY	WR	
√	-162.4	+85.5	-79.0	-85.6	+28.5	+179.2	

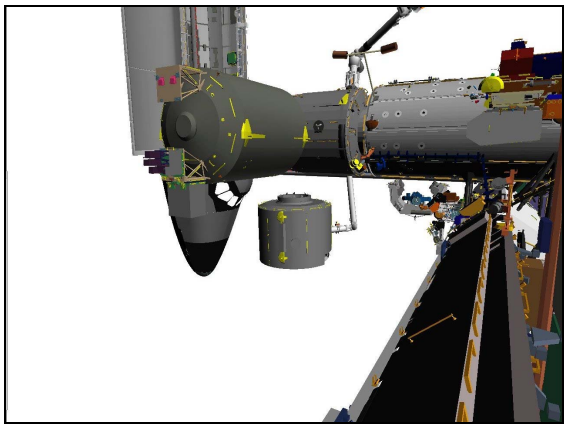

S1 LOOB (60,-10)

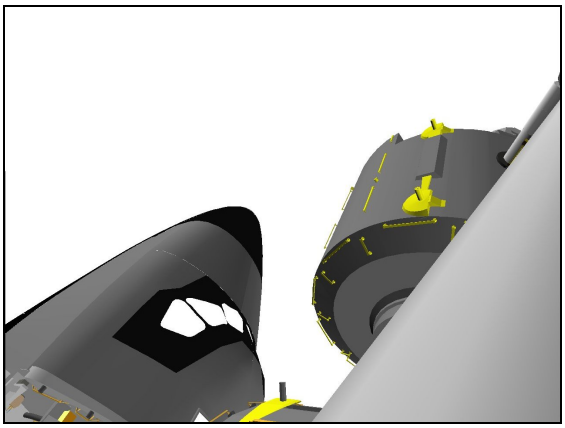

ELBOW (-40,-30)

2. MNVR JLP READY-TO-LATCH POSN
   On CBM Operator GO for maneuver to READY-TO-LATCH (1.511 NODE 2 CBM VERIFY PRE-MATE STATUS (SODF: S&M: NOMINAL: CBM) complete)

PCS MCS: MCS: Configuration: US GNC Inhibits
US GNC Inhibits
√Desat Request – Inh

RHC RATE – VERN (RATE MIN tb-ON)
BRAKES – OFF (tb-OFF)
MODE – PL, ENTER

Mnvr JLP until RTLs achieved (Target rate = 0.01 ft/sec)

NOTE
√CBCS alignment at REL X = -14 and correct if necessary

Expected JLP READY-TO-LATCH posn:

X	Y	Z	PITCH	YAW	ROLL	PL ID
-535	0	-635	180	0	90	4
SY	SP	EP	WP	WY	WR	
-158.5	+97.0	-90.9	-85.0	+27.8	+175.2	

Notify CBM Operator, maneuver to RTL complete

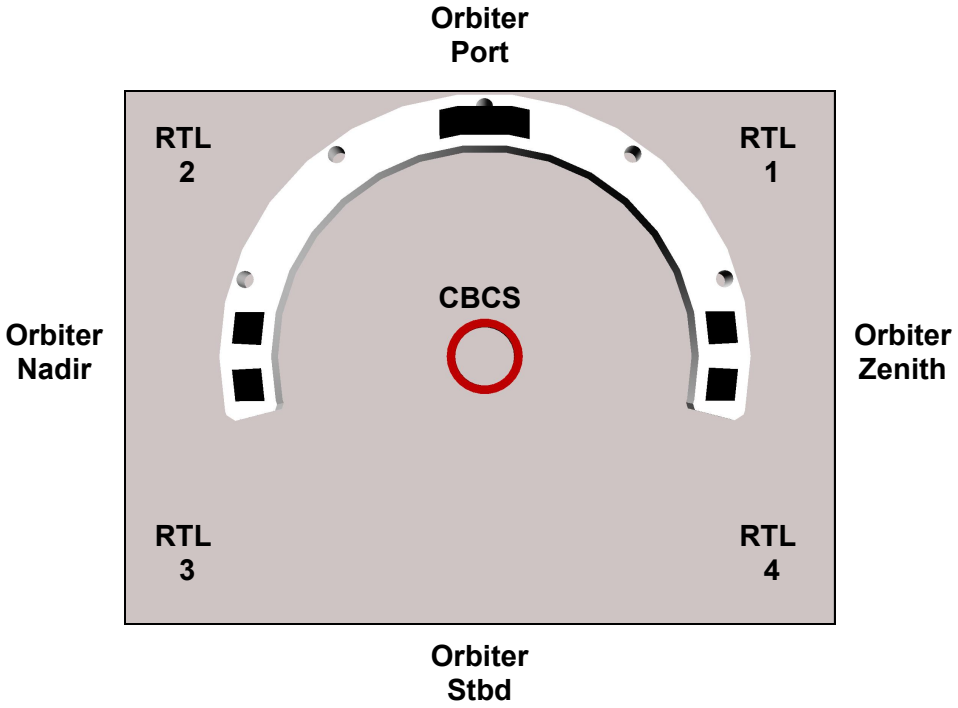

Missing RTLs	Mnvr
1 & 2	Pitch up
3 & 4	Pitch down
1 & 4	Yaw right
2 & 3	Yaw left

3. FIRST STAGE CAPTURE

On CBM Operator GO for SRMS mode to Test Mode (2.505 NODE 2 CBM CAPTURE/ABOLT-SHUTTLE RMS, steps 1-2 complete)

NOTE

CNTL ERR lt and S96 PDRS CNTL msg may occur when Auto Brakes inhibited and during CBM Second Stage Capture

SM 94 PDRS CONTROL

AUTO BRAKE INH – ITEM 10 EXEC (*)

MODE – TEST, ENTER

RHC RATE – COARSE (RATE MIN tb-OFF)

Notify CBM Operator, RMS Mode to Test Mode complete, GO for second stage Capture

4. <u>SECOND STAGE CAPTURE/A BOLTS</u>
On CBM Operator GO for SRMS Brakes ON (2.505 NODE 2 CBM CAPTURE/ABOLT-SHUTTLE RMS, steps 3-4 complete)

SM 94 PDRS CONTROL

AUTO BRAKE ENA – ITEM 9 EXEC (*)

BRAKES – ON (tb-ON)

Notify SSRMS Operator, JLP Install Complete and SRMS at JLP Install posn

If using Shuttle attitude control and attitude maintenance reqd:
DAP: LVLH
When rates damped:
DAP: FREE > 2 sec
DAP: AUTO

JLP INSTALL posn:

	X	Y	Z	PITCH	YAW	ROLL	PL ID
Expected	-540	0	-635	180	0	90	4
	SY	SP	EP	WP	WY	WR	
Expected	-158.1	+98.1	-91.9	-84.9	+27.8	+174.7	

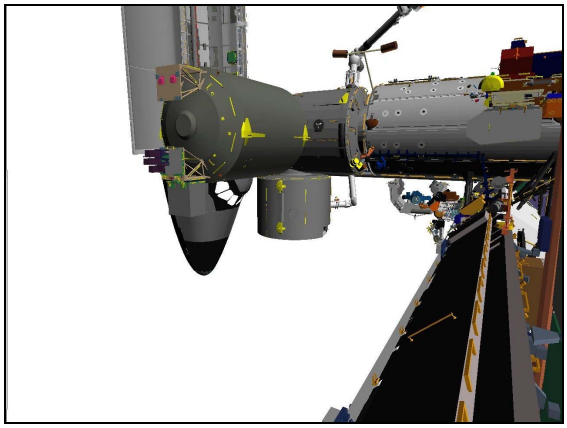

S1 LOOB (60,-10)

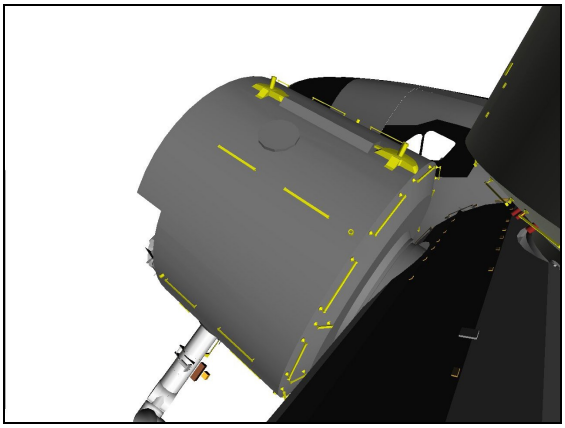

US LAB (-125,-20)

JLP UNGRAPPLE

1. SETUP

On SSRMS Operator GO for JLP Ungrapple and SSRMS at OBSS PRE-GRAPPLE posn:

SR	SY	SP	EP	WP	WY	WR
-81.5	+121.6	+166.3	+121.9	-18.3	+3.3	+229.5

A7U CCTV – config for ungrapple
– RMS WRIST, zoom 34.0 HFOV
focus 5 ft

SM 94 PDRS CONTROL

PL ID, ITEM 3 +0 EXEC
INIT ID, ITEM 24 +0 EXEC

2. JLP UNGRAPPLE

DNLK MON 1	EE
DTV MON 2	S1 LOOB
MON 1 (V10/L)	C
MON 2 (V10/R)	B

RATE – VERN (RATE MIN tb-ON)
BRAKES – OFF (tb-OFF)
MODE – END EFF, ENTER

CAUTION
Monitor EE tb timing to prevent EE motor burnout

SM 169 PDRS STATUS

EE MODE – AUTO
RELEASE sw – depress (mom)

When OPEN tb – gray, mnvr arm clear of grapple pin

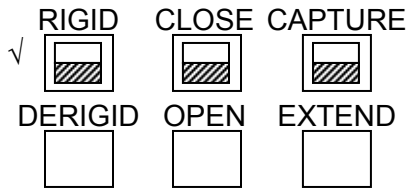

CRITICAL TIMES (28 sec total):
DERIGID tb – gray, 5 sec max, then
OPEN tb – gray, 3 sec max, then
EXTEND tb – gray, 20 sec max

Mnvr to INSTALLED JLP UNGRAPPLE posn:

X	Y	Z	PITCH	YAW	ROLL	PL ID
-448	-113	-731	271	311	1	0
SY	SP	EP	WP	WY	WR	
-164.8	+97.2	-80.0	-99.4	+28.9	+182.2	

BRAKES – ON (tb-ON)
EE MODE – OFF

```
*  If manual release required:                                          *
*      EE MODE          – MAN                                           *
*          MAN CONTR  – DERIGID (hold until DERIGID tb-gray, 5 sec max) *
*          RELEASE sw – depress (hold until OPEN tb-gray, 3 sec max)    *
*                                                                       *
*      Mnvr arm clear, then                                             *
*      EE MAN CONTR  – DERIGID (hold until EXTEND                       *
*                      tb-gray, 20 sec max)                             *
*          MODE         – OFF                                           *
```

3. MNVR TO OBSS PRE-GRAPPLE

DNLK MON 1	B (C)
DTV MON 2	A
MON 1 (V10/L)	CP-9 P1 LOOB
MON 2 (V10/R)	Elbow

RHC RATE – as reqd (VERN within 10 ft)
BRAKES – OFF (tb-OFF)
MODE – SINGLE, ENTER

Mnvr to OBSS PRE-GRAPPLE posn:

	SY	SP	EP	WP	WY	WR	
Installed JLP Ungrapple	-164.8	+97.2	-80.0	-99.4	+28.9	+182.2	
1: SP +		+130.0					*
2: SY +	-20.0						*
3: SP –		+90.0					
4: SY +	+24.4						
5: EP +			-34.4				
6: SP –		+64.7					
7: WP –				-99.6			
8: WY –					+11.3		
9: WR –						-99.0	
OBSS Pre-Grapple	+24.4	+64.7	-34.4	-99.6	+11.3	-99.0	
	X	Y	Z	PITCH	YAW	ROLL	PL ID
	-1017	-364	-674	284	0	270	0

*Expect SINGULAR lt

BRAKES – ON (tb-ON)

PARAM – PORT TEMP
JOINT – CRIT TEMP

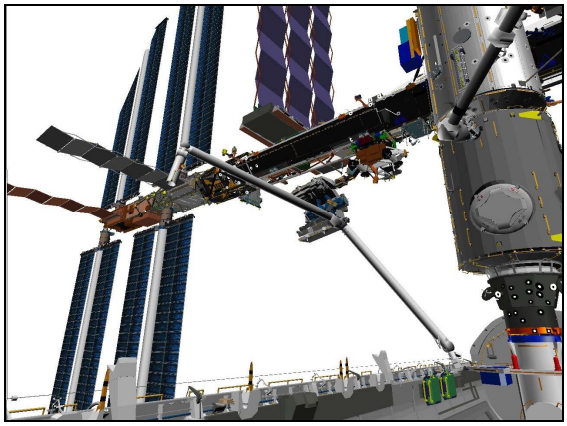

CCTV C (-40,20)

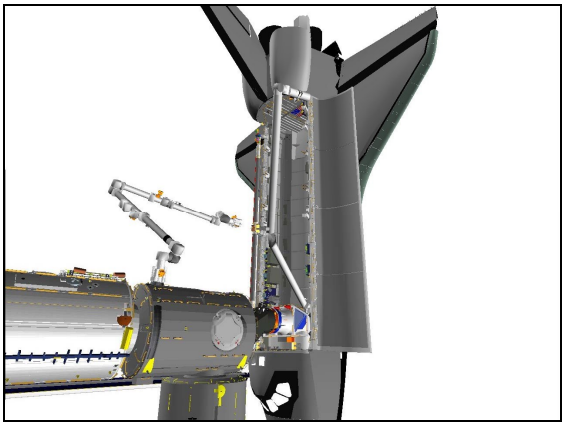

P1 LOOB (130,20)

OFF-NOMINAL JLP OPS

SJ JLP GRAPPLE ..... FS 2-2
UNBERTH ..... FS 2-8
INSTALL ..... FS 2-22
UNGRAPPLE ..... FS 2-27
JLP CONTINGENCY REBERTH ..... FS 2-35

OFF-NOMINAL JLP OPS

1. SETUP

Verify SSRMS at APFR INSTALL SETUP posn:

SR	SY	SP	EP	WP	WY	WR
-205.0	-29.2	-51.5	-91.3	-102.8	-160.5	-170.7

A7U CCTV – perform PAN/TILT RESET
– fully zoom out for SJ pictures
– RMS WRIST, zoom 34.0 HFOV
focus 5 ft

Maintain eyepoint ~18 in when using grapple overlay

SM 94 PDRS CONTROL

√PL ID, ITEM 3: 0

√INIT ID, ITEM 24: 0

> CAUTION
> Mid and Aft Payload Bay Flood Lights must be OFF until JLP at Hover position

2. SJ MNVR TO JLP PRE-GRAPPLE

DNLK MON 1	Elbow (EE)
DTV MON 2	B
MON 1 (V10/L)	A

PARAM – Joint Angle
If SINGLE MODE available:
RATE – VERN (RATE MIN tb-ON)
BRAKES – OFF (tb-OFF)
MODE – best available

Mnvr to JLP PRE-GRAPPLE posn:

	SY	SP	EP	WP	WY	WR
SLP Viewing	+125.4	+41.6	-42.6	+35.2	-50.0	-55.6
1: SY –	+2.6					
2: SP –		+40.2				
3: EP –			-47.4			
4: WP –				-84.2		
5: WY +					-29.4	
6: WR +						+16.4
JLP Pre-Grapple	+2.6	+40.2	-47.4	-84.2	-29.4	+16.4

X	Y	Z	PITCH	YAW	ROLL	PL ID
-1151	-123	-505	270	311	0	0

If SINGLE MODE:
BRAKES – ON (tb-ON)
MODE – not DIRECT

Step 1:
Drive SY– (for 122.8°)
From 0.0° to +2.6°

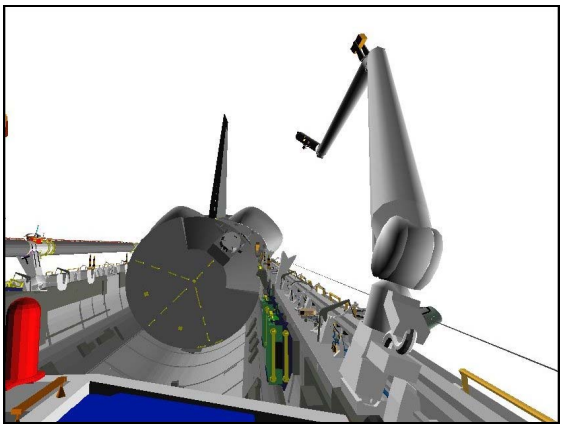

CCTV A (5,5)

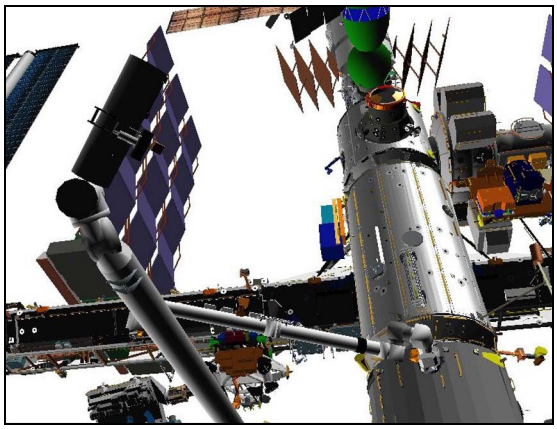

CCTV B (-10,45)

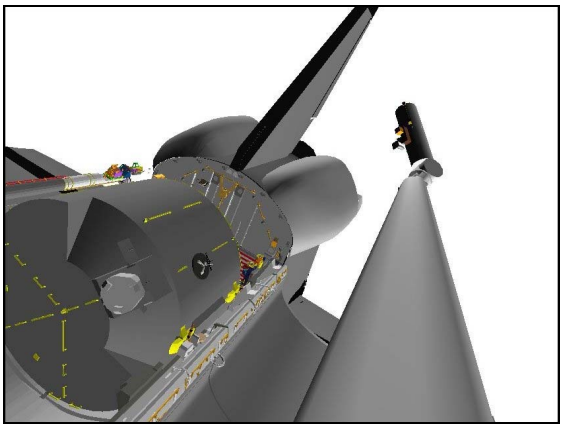

ELBOW (-20,-10)

Step 2:
Drive SP– (for 1.4°)
From +41.6° to +40.2°

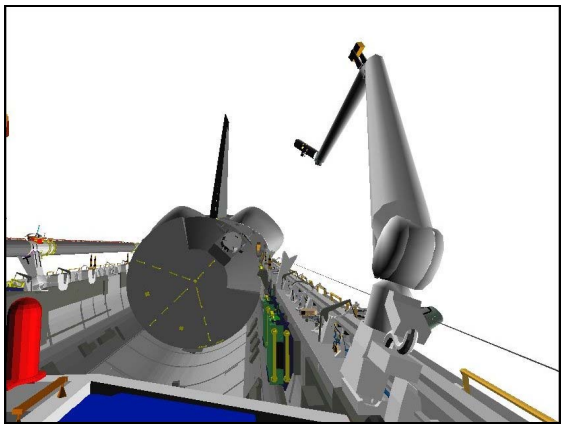

CCTV A (5,5)

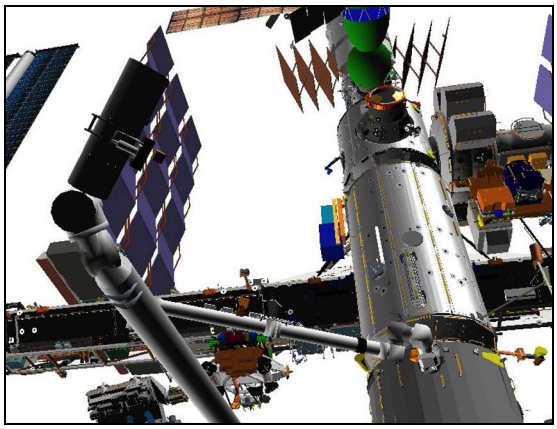

CCTV B (-10,45)

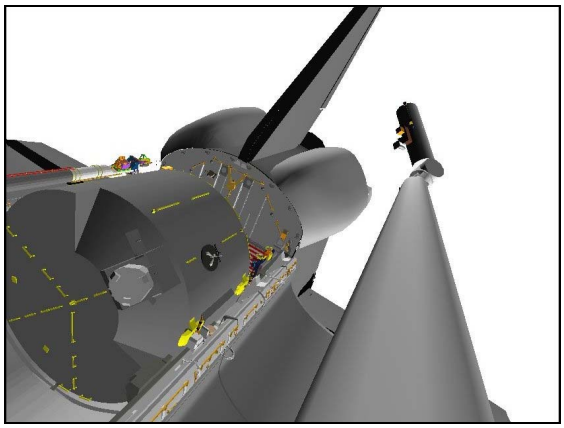

ELBOW (-20,-10)

Step 3:

Drive EP- (for 4.8°)

From –42.6° to -47.4°

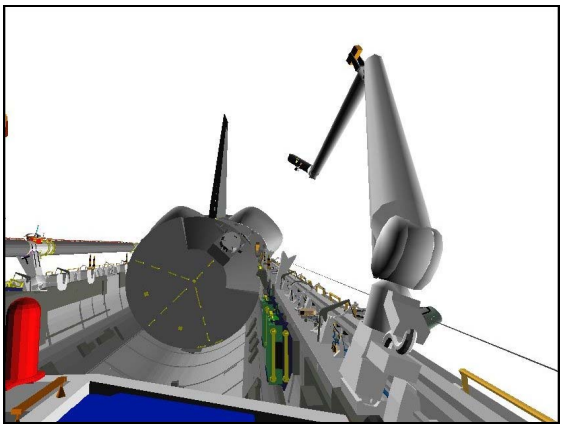

CCTV A (5,5)

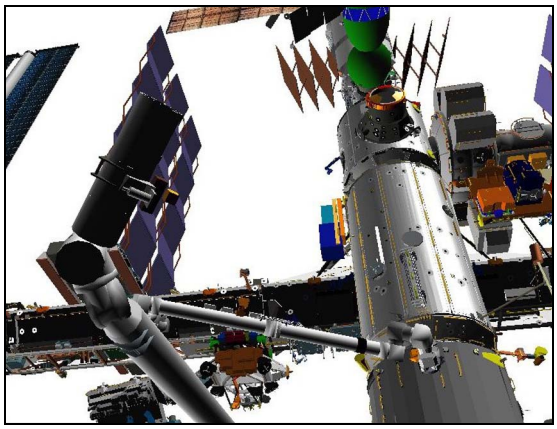

CCTV B (-10,45)

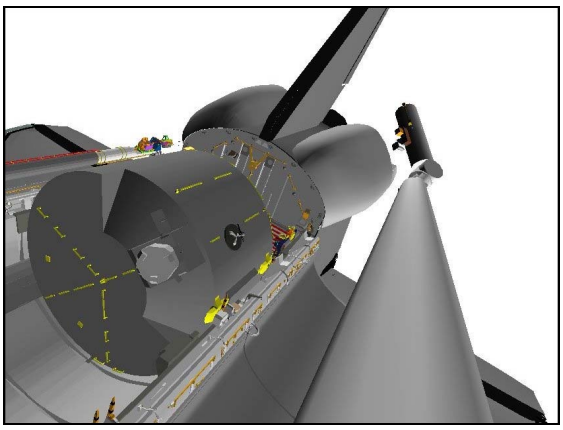

ELBOW (-20,-10)

Step 4:

Drive WP- (for 119.4°)

From +35.2° to -84.2°

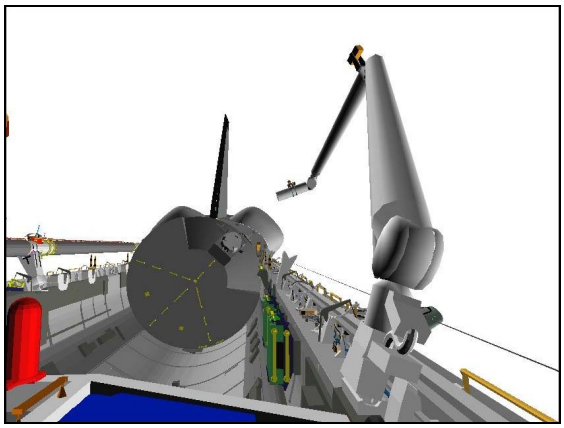

CCTV A (5,5)

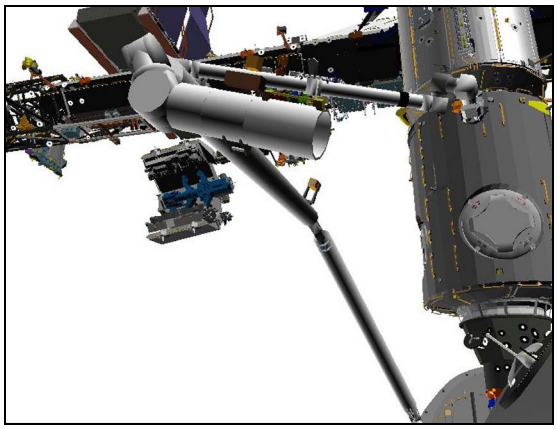

CCTV B (-15,20)

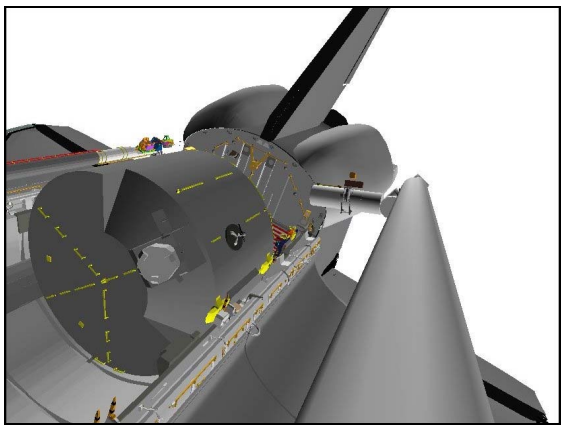

ELBOW (-20,-10)

Step 5:

Drive WY+ (for 20.6°)

From -50.0° to -29.4°

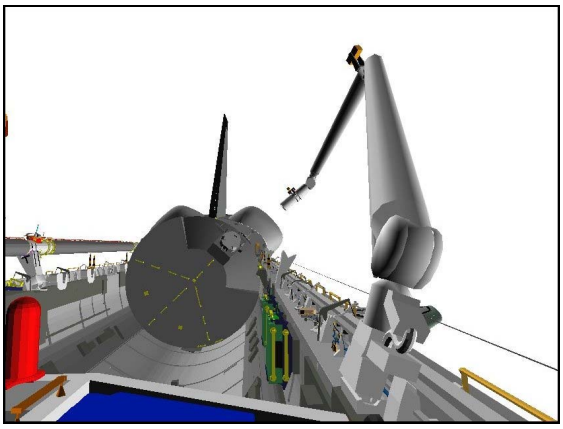

CCTV A (5,5)

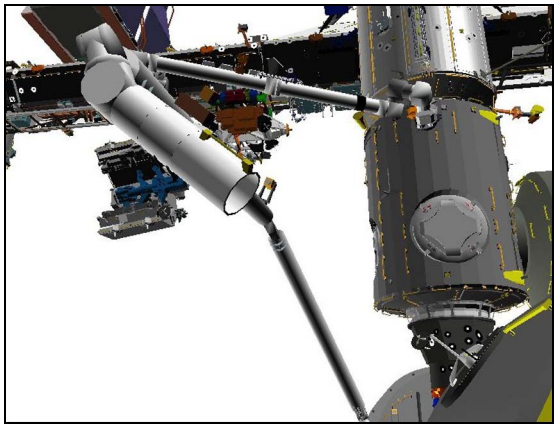

CCTV B (-10,20)

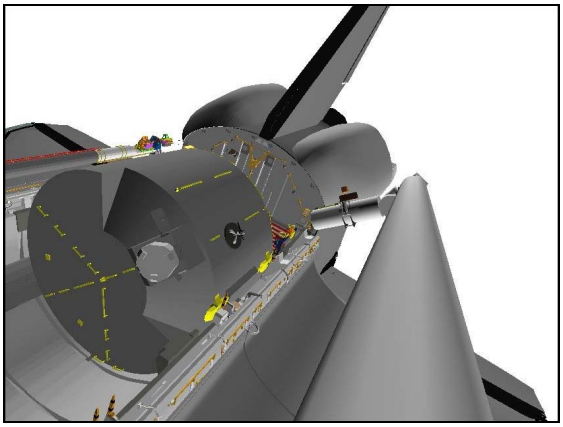

ELBOW (-20,-10)

Step 6:

Drive WR+ (for 72.0°)

From -55.6° to +16.4°

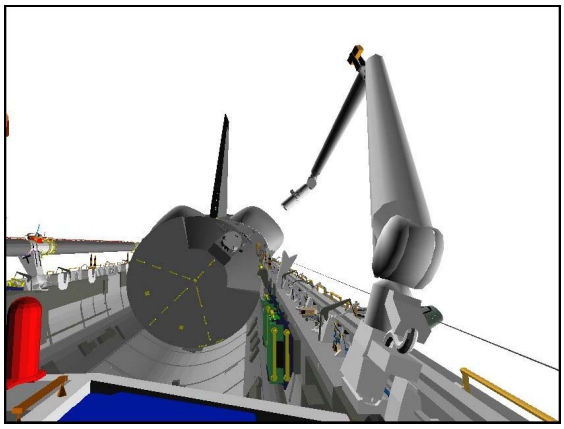

CCTV A (5,5)

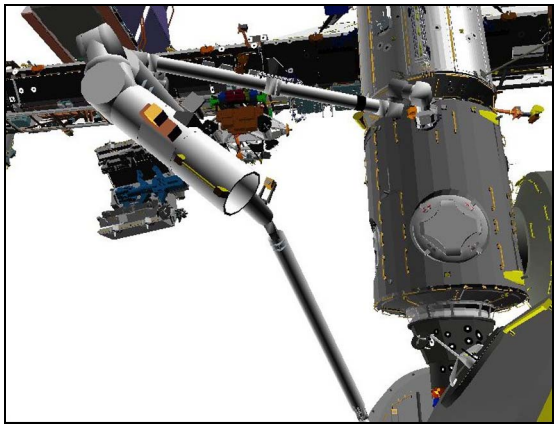

CCTV B (-10,20)

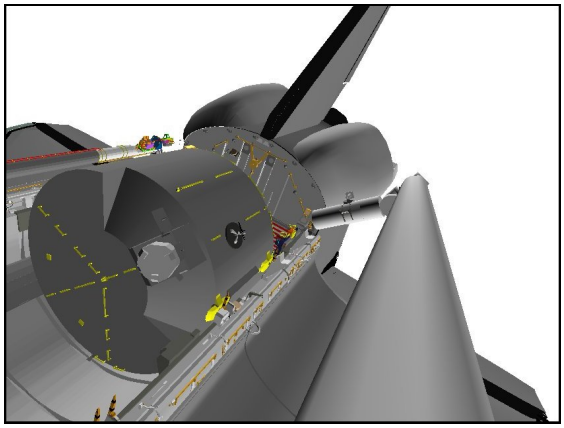

ELBOW (-20,-10)

3. <u>SJ MNVR TO JLP GRAPPLE</u>
CCTV – config for grapple

DNLK MON 1	EE (Elbow)
DTV MON 2	B
MON 1 (V10/L)	A

On EVA GO for JLP Grapple and clear of JLP:
If SINGLE MODE available:
√RATE – VERN (RATE MIN tb-ON)
BRAKES – OFF (tb-OFF)
MODE – best available

Drive joints per <u>JLP SJ GRAPPLE – WRIST CCTV OVERLAY</u> and diagram until EE within grapple envelope

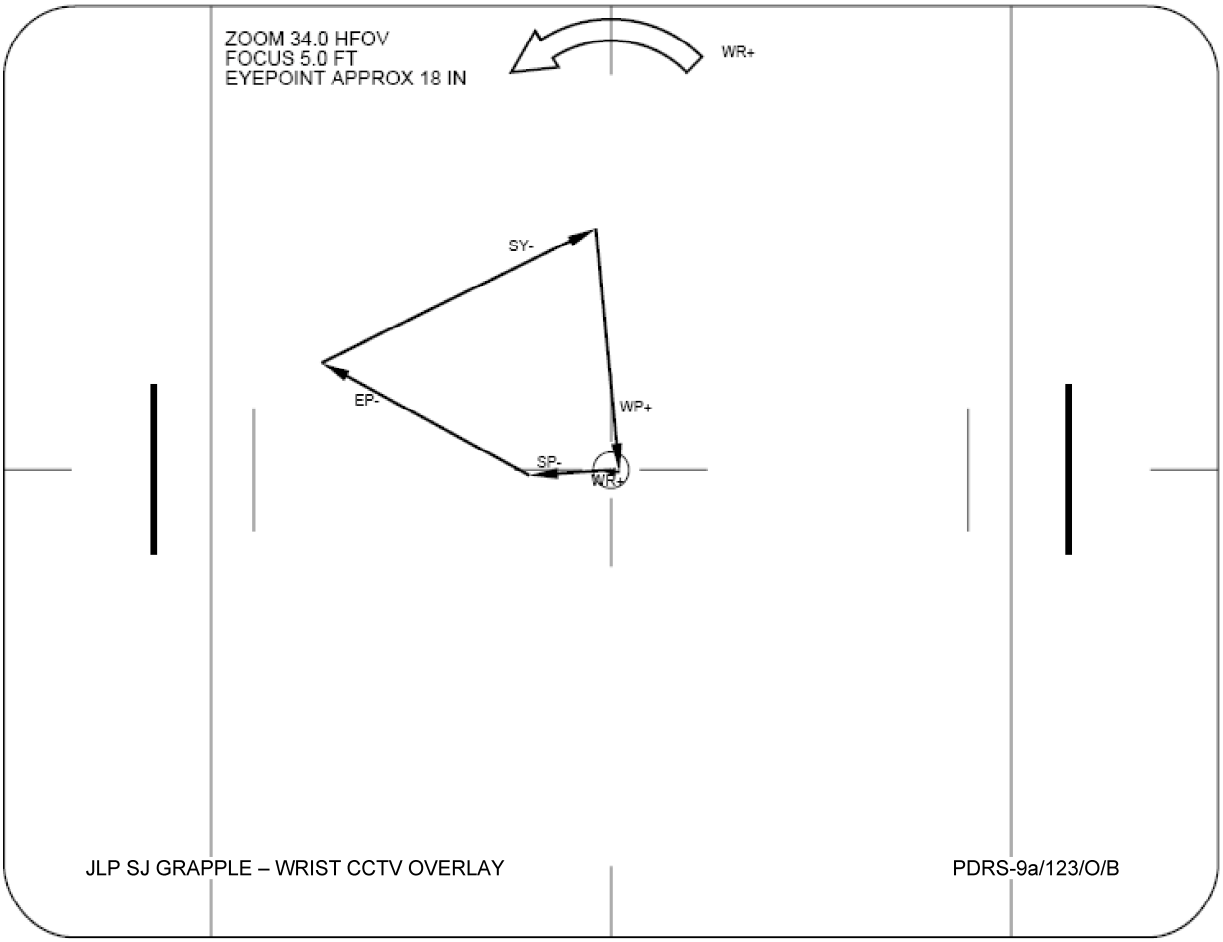

4. JLP GRAPPLE

CAUTION
Monitor EE tb timing to prevent EE motor burnout

SM 169 PDRS STATUS

EE MODE – AUTO
CAPTURE sw – depress (mom)

	RIGID	CLOSE	CAPTURE
√			
	DERIGID	OPEN	EXTEND

CRITICAL TIMES (28 sec total):
CAPTURE tb – gray, then
CLOSE tb – gray, 3 sec max, then
RIGID tb – gray, 25 sec max

```
* If manual grapple reqd:                                          *
*     EE MODE        – MAN                                        *
*         CAPTURE sw – depress (hold until CLOSE tb-gray, 3 sec max) *
*         MAN CONTR  – RIGID (hold until RIGID tb-gray, 25 sec max) *
```

EE MODE – OFF
BRAKES – ON (tb-ON)
MODE – not DIRECT

Notify SSRMS operator, SRMS JLP Grapple complete

If SINGLE MODE available:
SM 94 PDRS CONTROL
PL ID, ITEM 3 +3 EXEC
INIT ID, ITEM 24 +3 EXEC

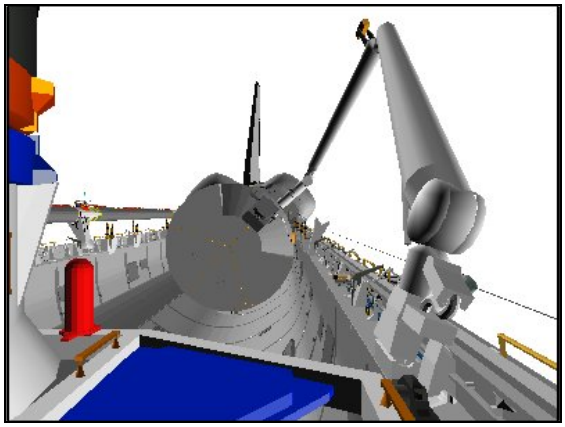

CCTV A (0,0)

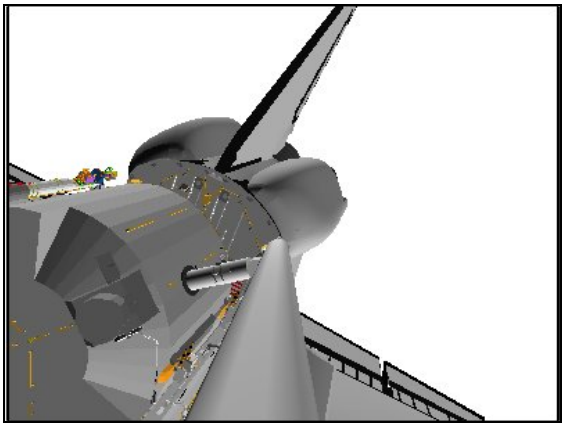

ELBOW (0,0)

Record POS/ATT and Joint Angles:

	X	Y	Z	PITCH	YAW	ROLL	PL ID
							3
Expected	-1161	0	-414	0	0	0	3
	SY	SP	EP	WP	WY	WR	
Expected	-1.8	+36.7	-54.7	-71.0	-29.7	+22.0	

Record POS/ATT and Joint Angles in JLP CONTINGENCY REBERTH (OFF-NOMINAL JLP OPS)

Review GENERIC END EFFECTOR CUE CARD – ISS/SHUTTLE DOCKED OPS

1. SETUP
   Perform JLP UNBERTH, steps 1-5

2. SJ MNVR TO TOP OF V-GUIDES
   If SINGLE MODE available:
   RATE – as reqd (VERN within 10 ft)
   BRAKES – OFF (tb-OFF)

   MODE – best available
   Mnvr JLP up until unconstrained
A6U √PL RETEN RDY 1, 2, 3, 4 tb (four) – bp

   Drive joint per JLP UNBERTH histogram until JLP trunnions at top of V-guides

   TOP OF V-GUIDES posn:

	X	Y	Z	PITCH	YAW	ROLL	PL ID
√	-1161	0	-437	0	0	0	3
	SY	SP	EP	WP	WY	WR	
√	-2.8	+38.5	-53.0	-74.0	-29.7	+23.1	

JLP UNBERTH

ΔSY	ΔSP	ΔEP	ΔWP	ΔWY	ΔWR
-1.0	+1.8	+1.7	-3.0	-0.0	+1.1

z	SY	SP	EP	WP	WY	WR
-413	-1.8	+36.7	-54.7	-71.0	-29.7	+22.0
-416	-1.9	+36.9	-54.5	-71.3	-29.7	+22.1
-435	-2.7	+38.3	-53.2	-73.7	-29.7	+23.0
-437	-2.8	+38.5	-53.0	-74.0	-29.7	+23.1

JLP UNBERTH

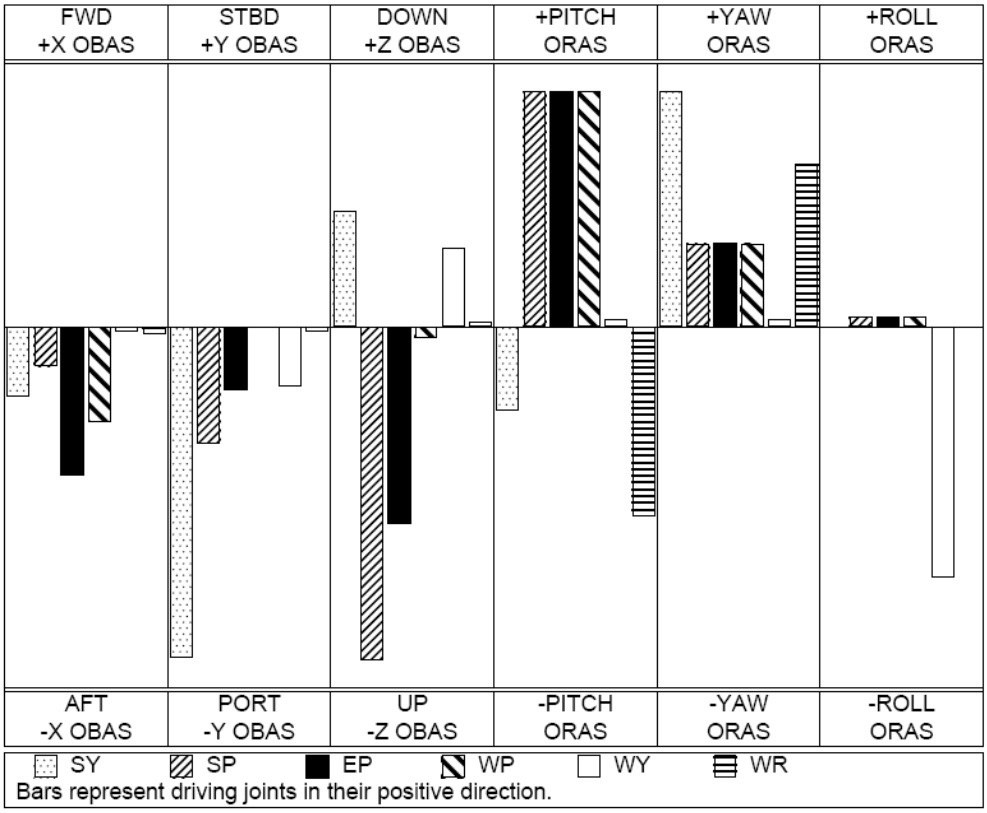

To get:	Drive:
+X (fwd)	-EP, -WP
+Y (stbd)	-SY
+Z (down)	-SP, -EP

To get:	Drive:
+PITCH	+WP, +EP
+YAW	+SY, +WR
+ROLL	-WY

Driving:	Results In:
+SY	-Y (port), +YAW
+SP	-Z (up), +PITCH
+EP	-Z (up), +PITCH

Driving:	Results In:
+WP	-X (aft), +PITCH
+WY	+Z (down), -ROLL
+WR	-PITCH

ΔSY	ΔSP	ΔEP	ΔWP	ΔWY	ΔWR
-1.0	+1.8	+1.7	-3.0	-0.0	+1.1

If SINGLE MODE available:
BRAKES – ON (tb-ON)
MODE – not DIRECT

<u>NOTE</u>
Configure payload bay flood lights as required

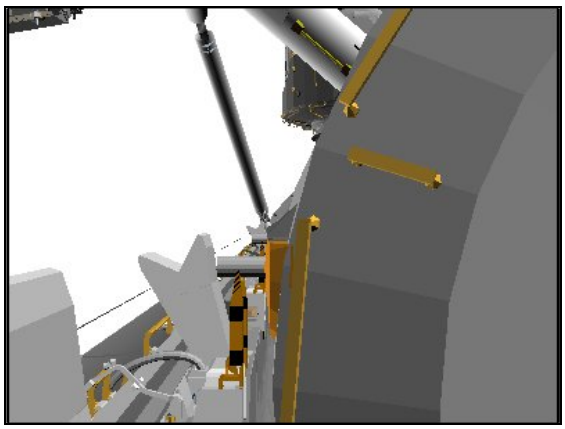

CCTV B (0,0)

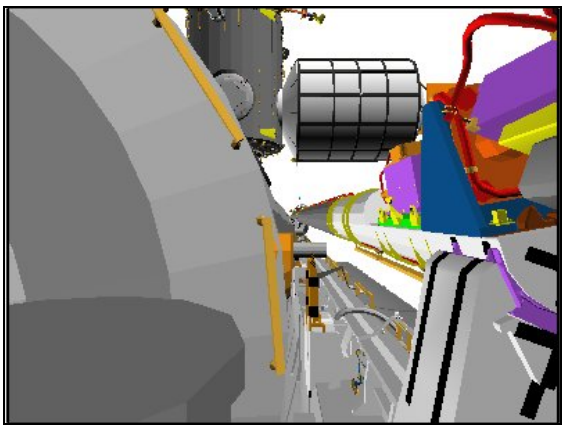

CCTV C (0,0)

3. MNVR TO JLP PRE-INSTALL

NOTE

SJ mnvr designed to maximize clearance to OBSS.
Coarse rates allowed during the following steps:
- Step 7 after SP = +68.0
- Steps 8 and 9 ALL
- Step 10 until SY = -28.0
- Step 11 after SP = +118.0
- Step 12 until SY = -61.0
- Step 14 until SY = -127.0
- Step 15 after WY = -5.0
- Step 16 ALL

If SINGLE MODE available:
- RATE – as reqd (VERN within 10 ft)
- BRAKES – OFF (tb-OFF)

MODE – best available

Mnvr to JLP PRE-INSTALL posn:

	SY	SP	EP	WP	WY	WR	
Top of V-Guides	-2.8	+38.5	-53.0	-74.0	-29.7	+23.1	
1: SP +		+39.1					
2: WY –					-30.5		
3: SP +		+39.7					
4: WY –					-31.7		
5: SP +		+40.6					
6: WY –					-32.9		
7: SP +		+90.0					
8: WY +					+30.0		
9: WR +						+179.2	
10: SY –	-30.0						
11: SP +		+130.0					*
12: SY –	-100.0						
13: EP +			-35.0				
14: SY –	-162.4						
15: WY –					-30.0		
16: WP –				-85.6			
17: EP –			-79.0				*
18: SP –		+85.5					
19: WY +					+28.5		
JLP Pre-Install	-162.4	+85.5	-79.0	-85.6	+28.5	+179.2	
	X	Y	Z	PITCH	YAW	ROLL	PL ID
	-399	-2	-651	0	359	1	3

*Expect SINGULAR lt

If SINGLE MODE:
    BRAKES – ON (tb-ON)
MODE – not DIRECT

If using Shuttle attitude control and attitude maintenance reqd:
    DAP: LVLH
    When rates damped:
        DAP: FREE > 2 sec
        DAP: AUTO

Step 1:
Drive SP+ (for 0.6°)
From +38.5° to +39.1°

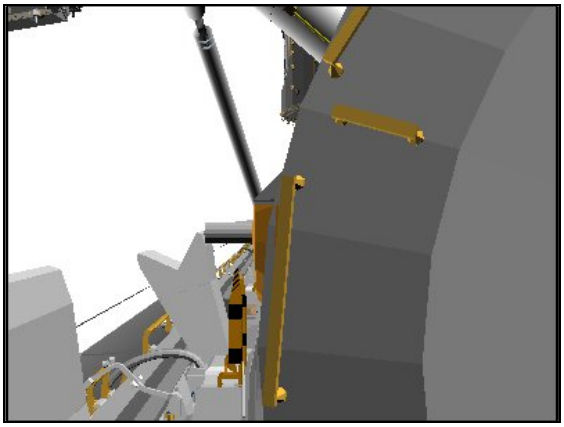

CCTV B (0,0)

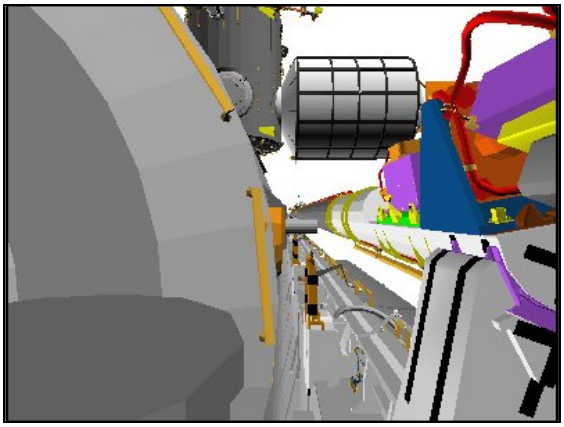

CCTV C (0,0)

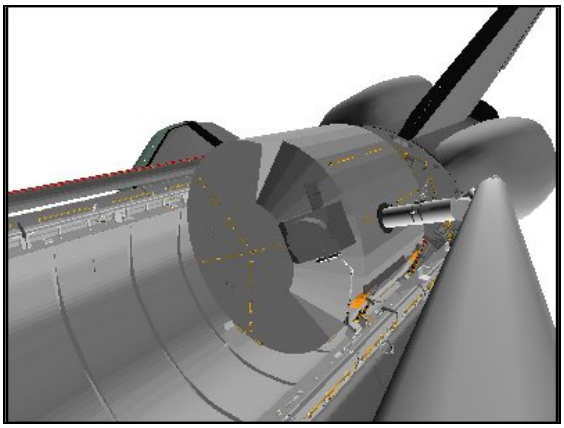

ELBOW (-30,-10)

Step 2:
Drive WY- (for 0.8°)
From -29.7° to -30.5°

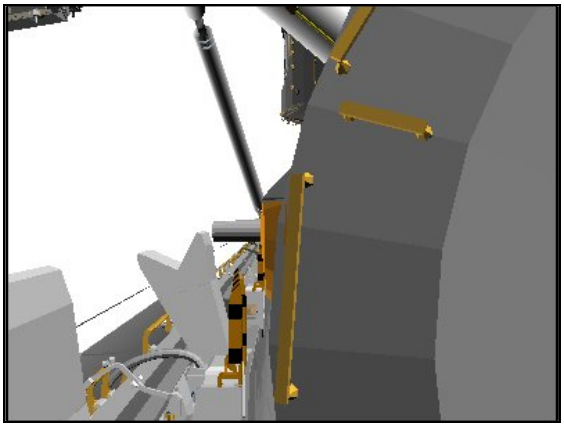

CCTV B (0,0)

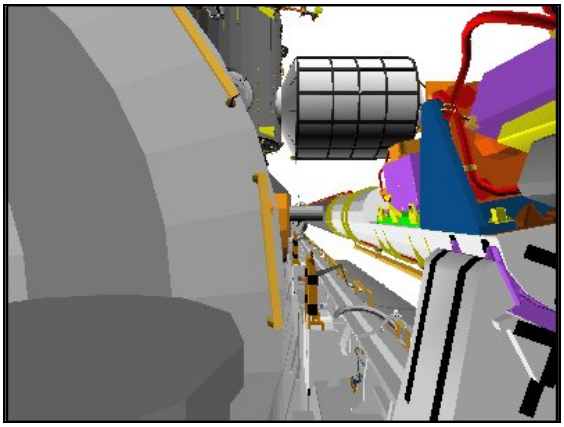

CCTV C (0,0)

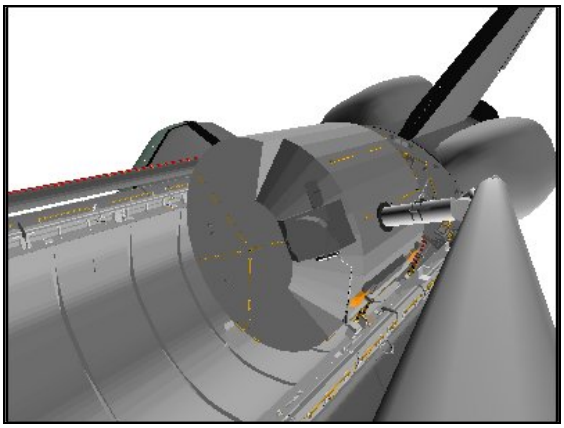

ELBOW (-30,-10)

Step 3:

Drive SP+ (for 0.6°)

From +39.1° to +39.7°

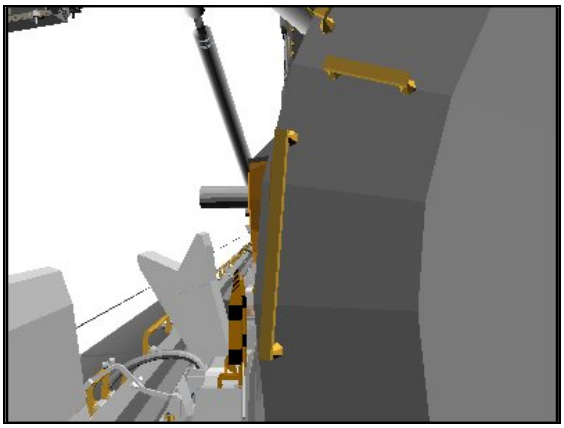

CCTV B (0,0)

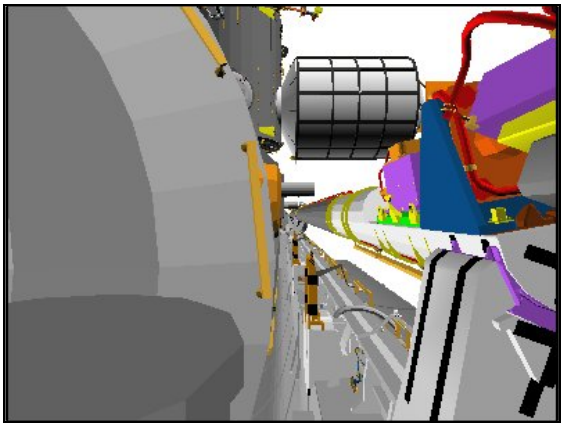

CCTV C (0,0)

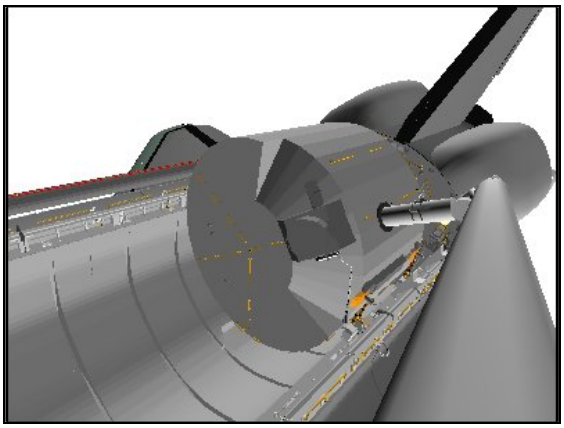

ELBOW (-30,-10)

Step 4:

Drive WY- (for 1.2°)

From -30.5° to -31.7°

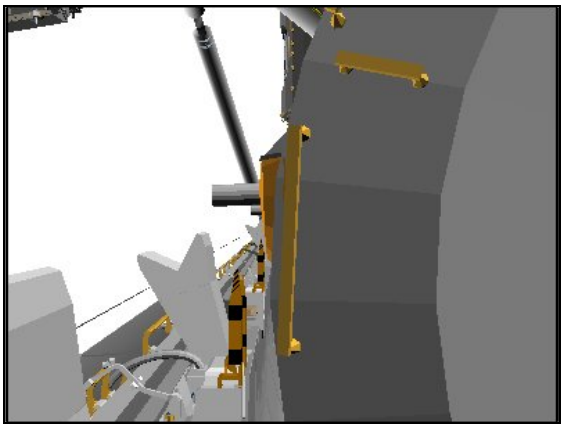

CCTV B (0, 0)

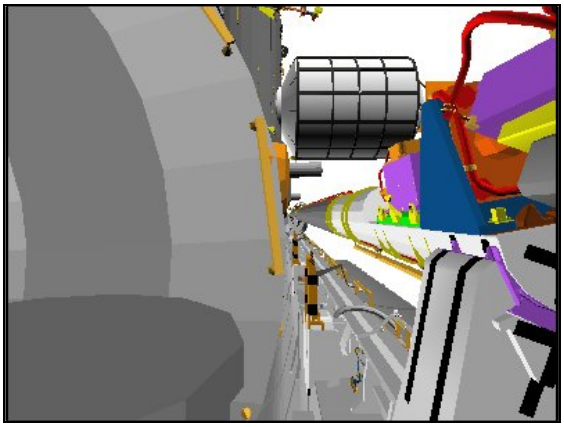

CCTV C (0,0)

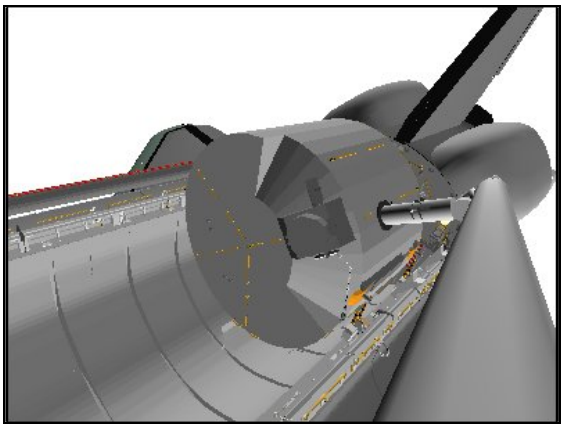

ELBOW (-30,-10)

Step 5:

Drive SP+ (for 0.9°)

From +39.7° to +40.6°

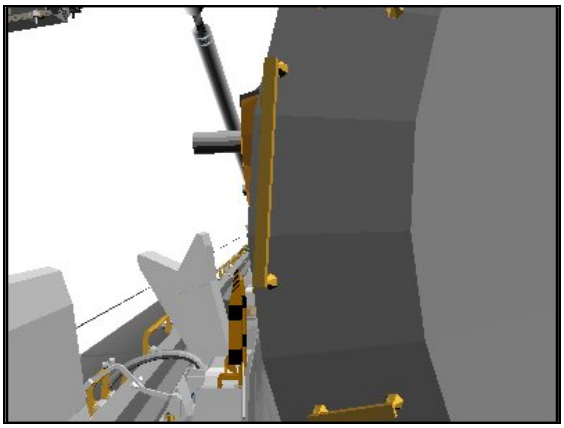

CCTV B (0,0)

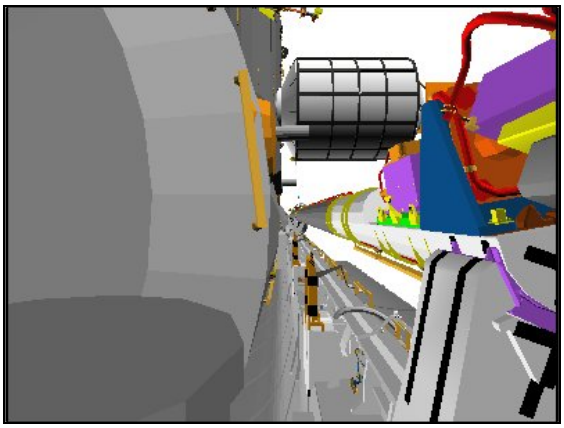

CCTV C (0,0)

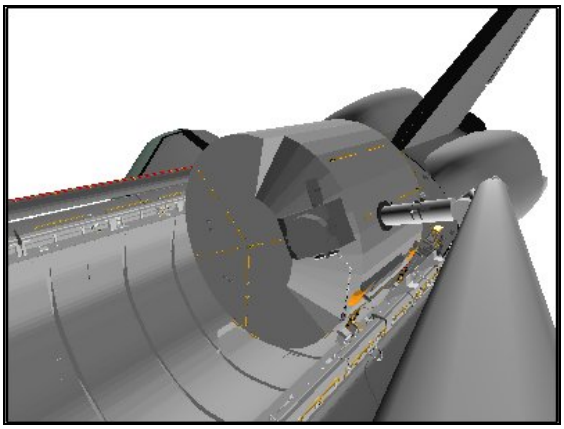

ELBOW (-30,-10)

Step 6:

Drive WY- (for 1.2°)

From -31.7° to -32.9°

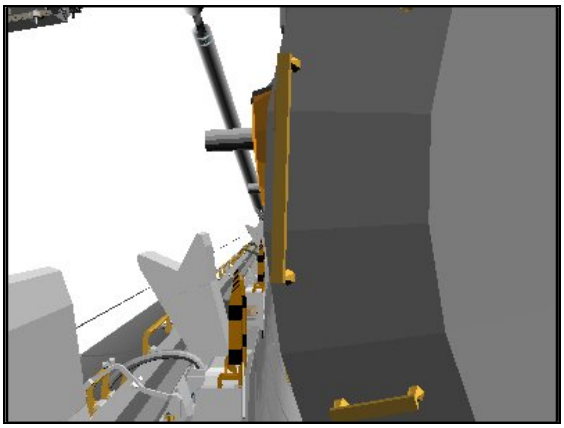

CCTV B (0,0)

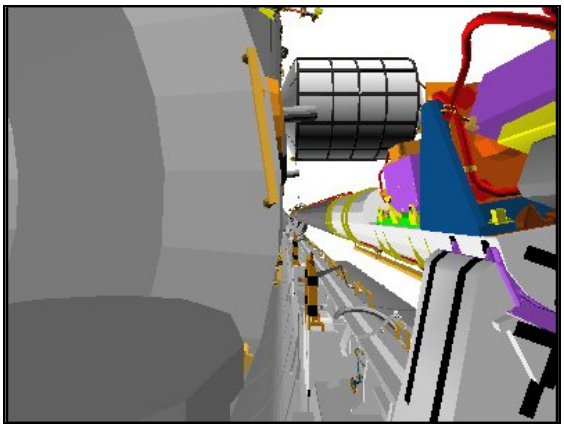

CCTV C (0,0)

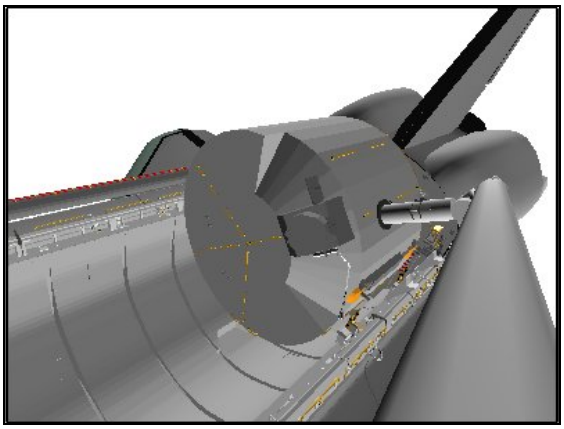

ELBOW (-30,-10)

Step 7:

Drive SP+ (for 49.4°)

From 40.6° to +90.0°

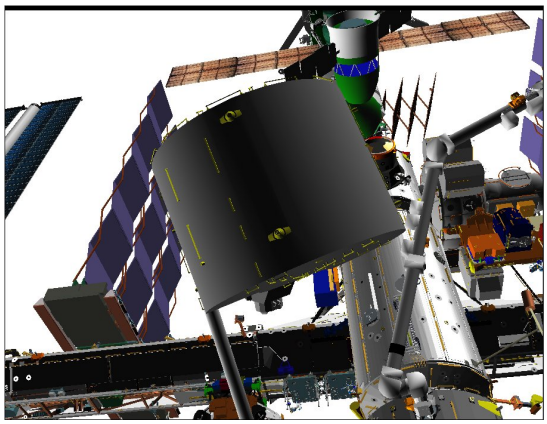

CCTV B (-10,50)

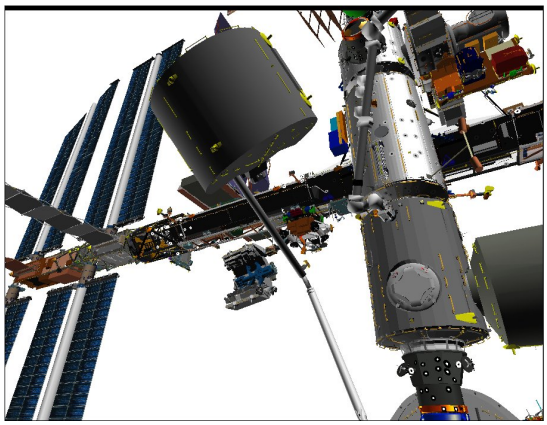

CCTV C (-30,30)

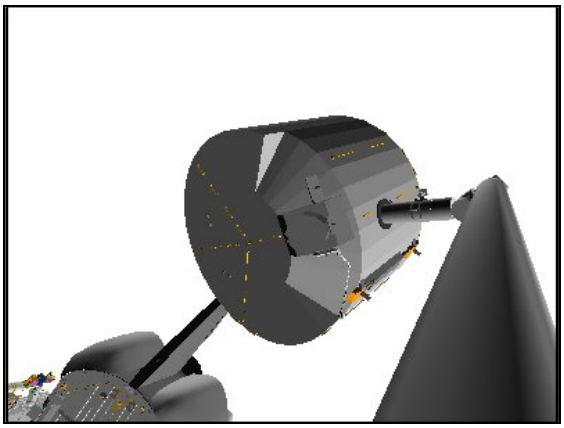

ELBOW (-30,-10)

Step 8:

Drive WY+ (for 62.9°)

-32.9° to +30.0°

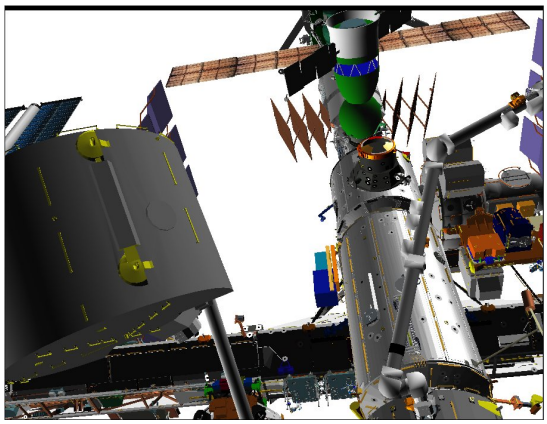

CCTV B (-10,50)

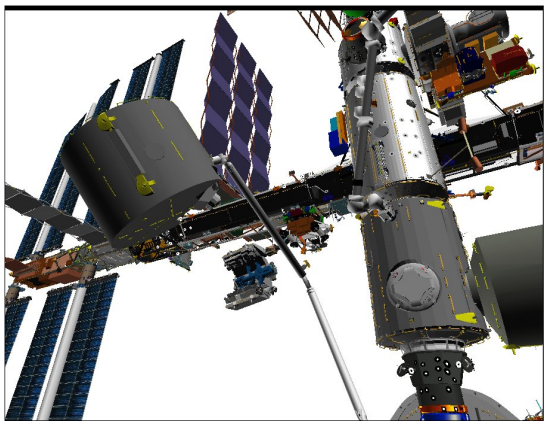

CCTV C (-30,30)

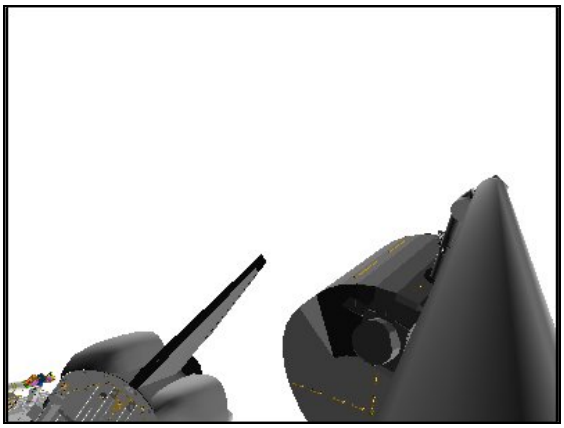

ELBOW (-30,-10)

Step 9:

Drive WR+ (for 156.1°)

From +23.1° to +179.2°

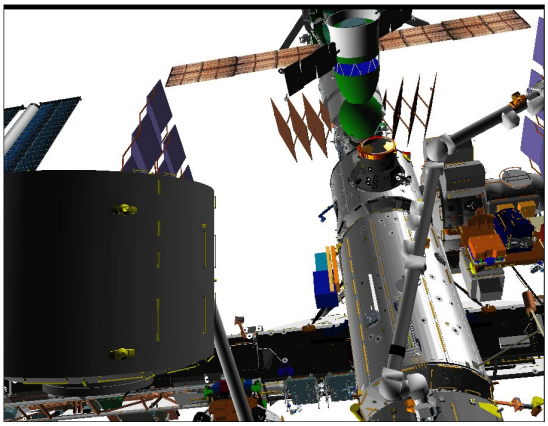

CCTV B (-10,50)

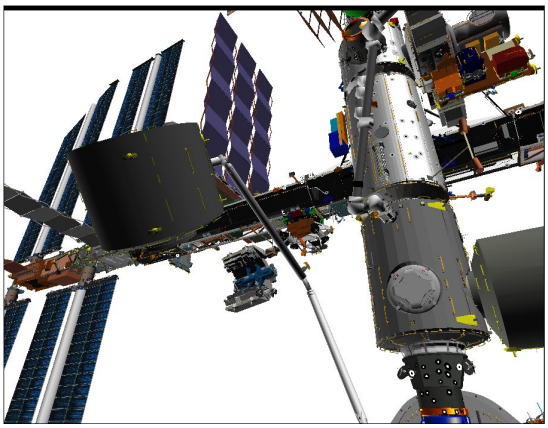

CCTV C (-30,30)

ELBOW (-30,-10)

Step 10:

Drive SY- (for 27.2°)

From -2.8° to -30.0°

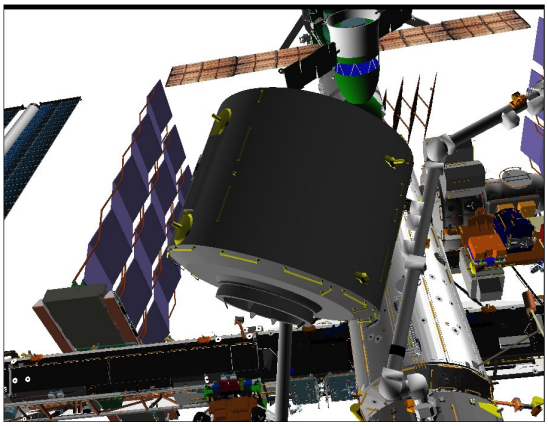

CCTV B (-10,50)

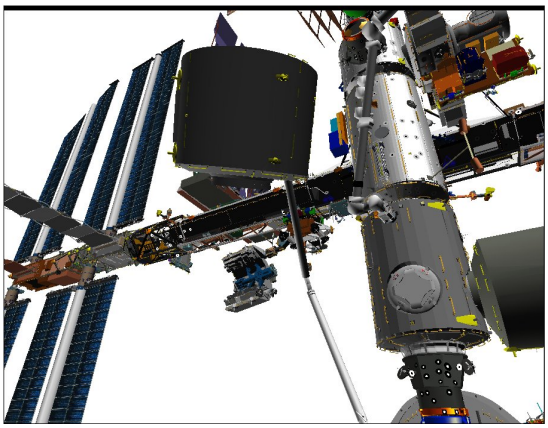

CCTV C (-30,30)

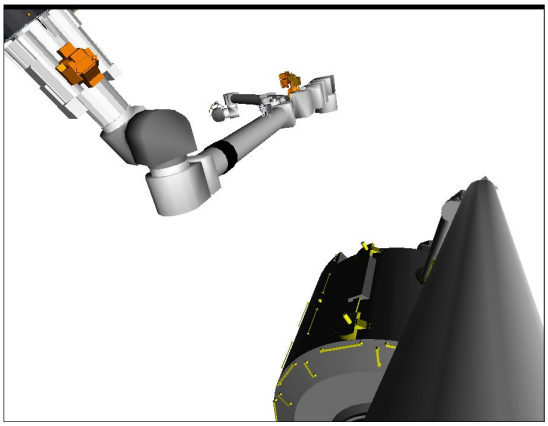

ELBOW (-30,-10)

Step 11:
Drive SP+ (for 40.0°)
From +90.0° to +130.0°

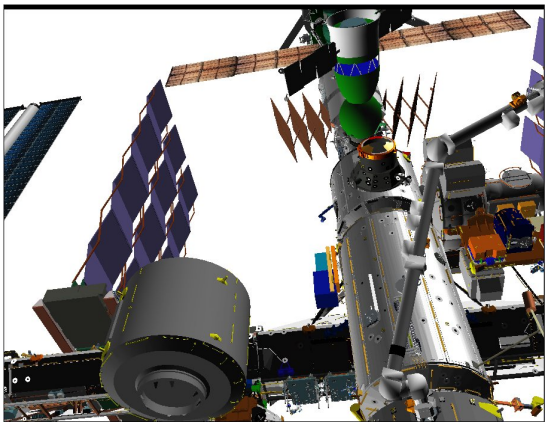

CCTV B (-10,50)

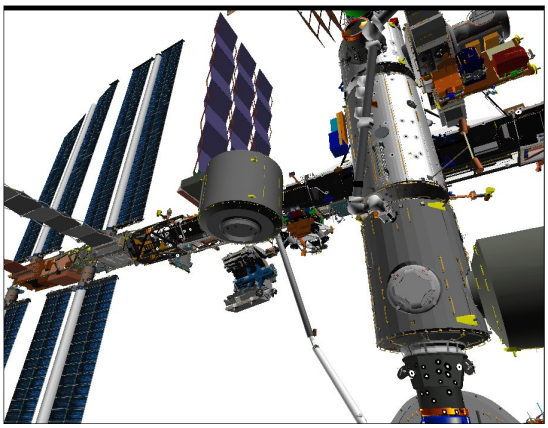

CCTV C (-30,30)

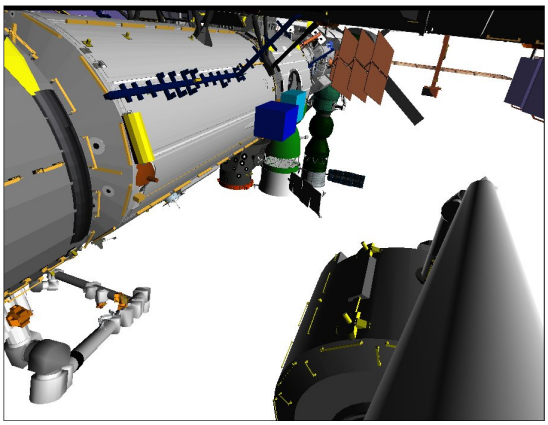

ELBOW (-30,-10)

Step 12:
Drive SY- (for 70.0°)
From -30.0° to -100.0°

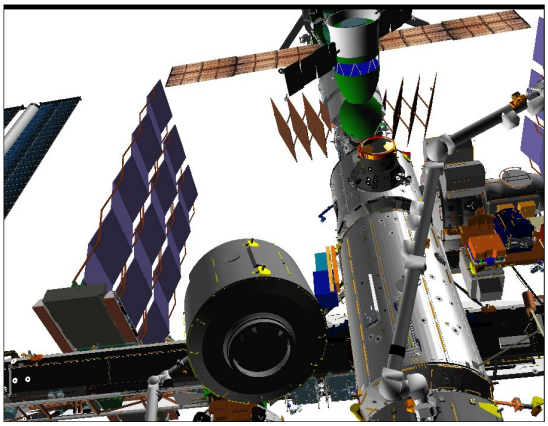

CCTV B (-10,50)

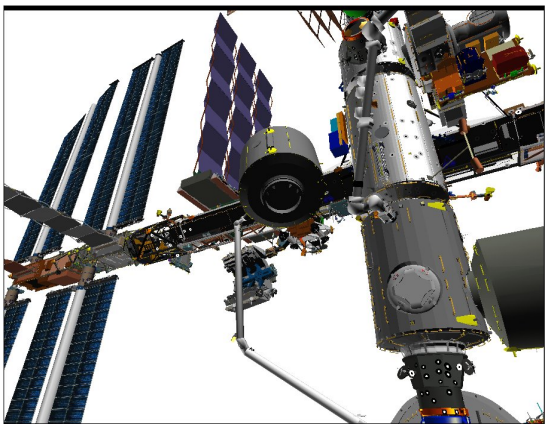

CCTV C (-30,30)

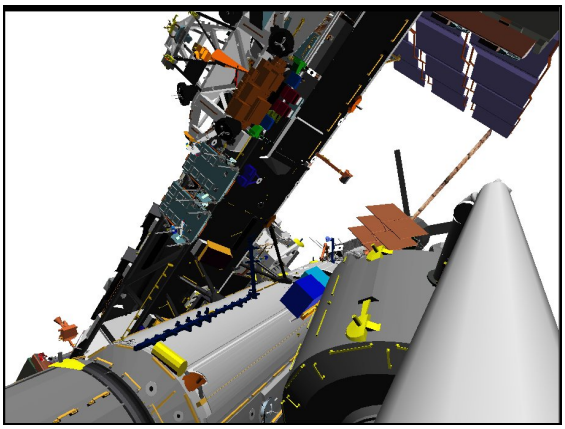

ELBOW (-30,-10)

Step 13:
Drive EP+ (for 18.0°)
From -53.0° to -35.0°

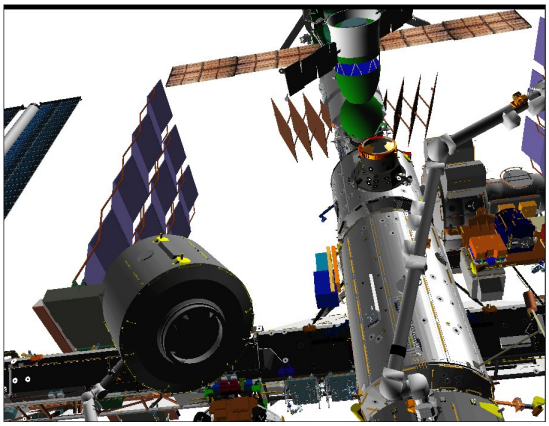

CCTV B (-10,50)

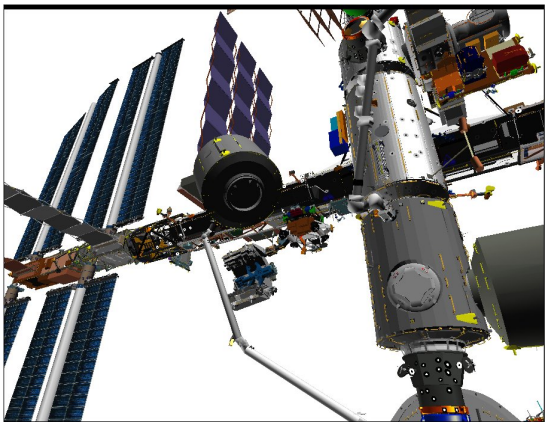

CCTV C (-30,30)

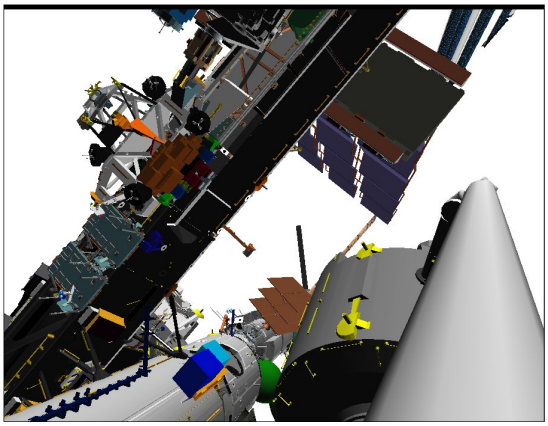

ELBOW (-30,-10)

Step 14:
Drive SY- (for 62.4°)
From -100.0° to -162.4°

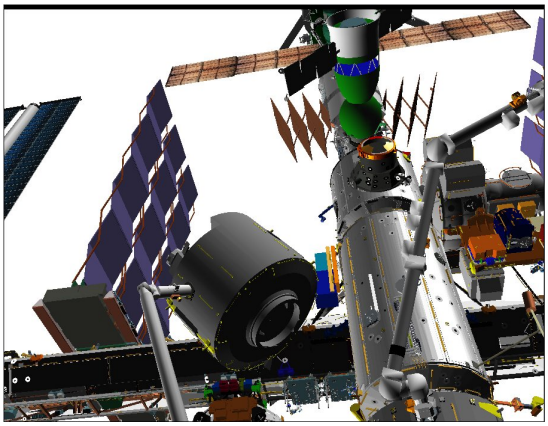

CCTV B (-10,50)

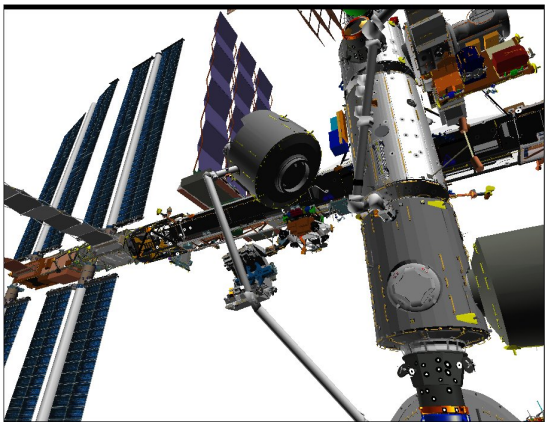

CCTV C (-30,30)

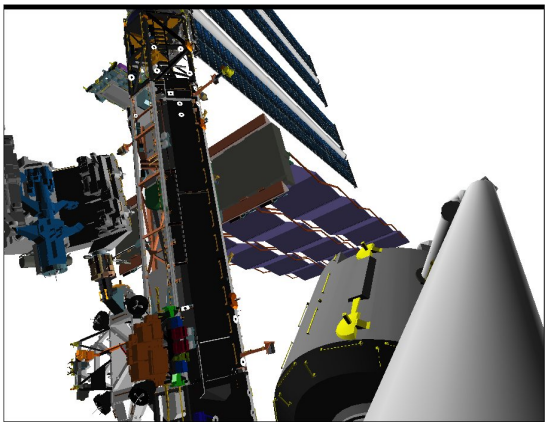

ELBOW (-30,-10)

Step 15:

Drive WY- (for 60.0°)

From +30.0° to -30.0°

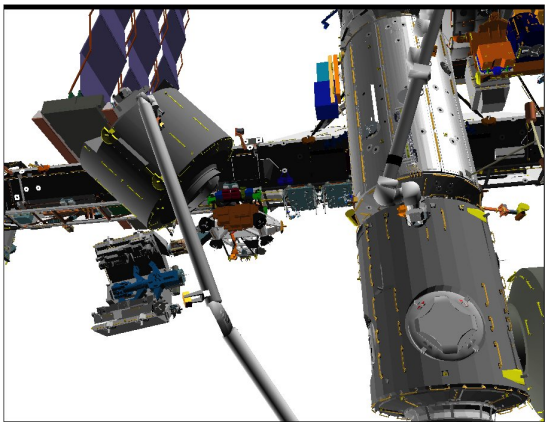

CCTV B (-10,30)

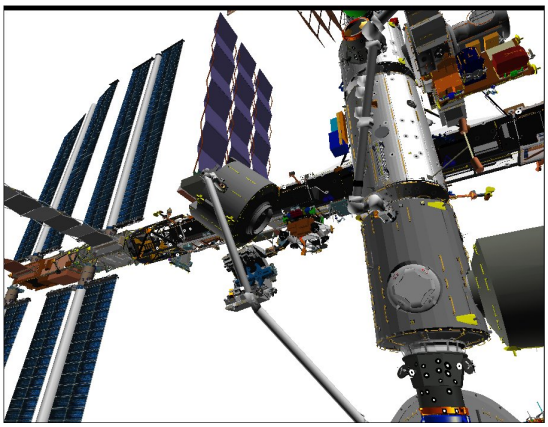

CCTV C (-30,30)

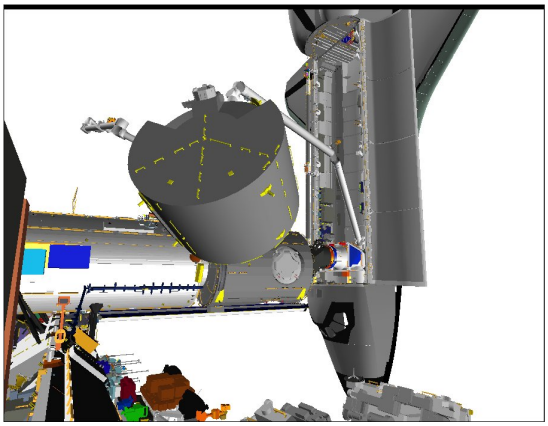

P1 LOOB (120,10)

Step 16:

Drive WP- (for 11.6°)

From -74.0° to -85.6°

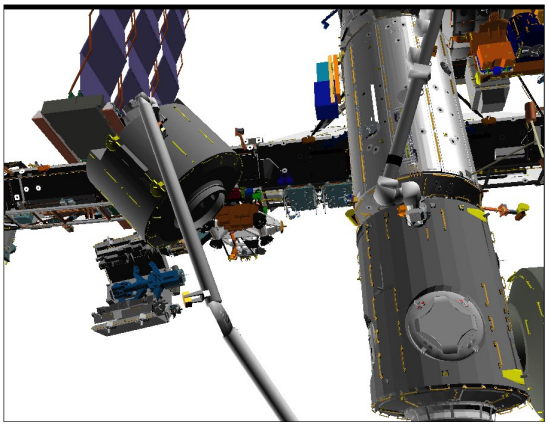

CCTV B (-10,30)

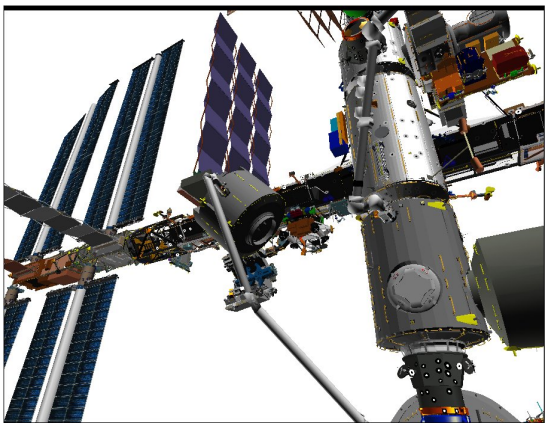

CCTV C (-30,30)

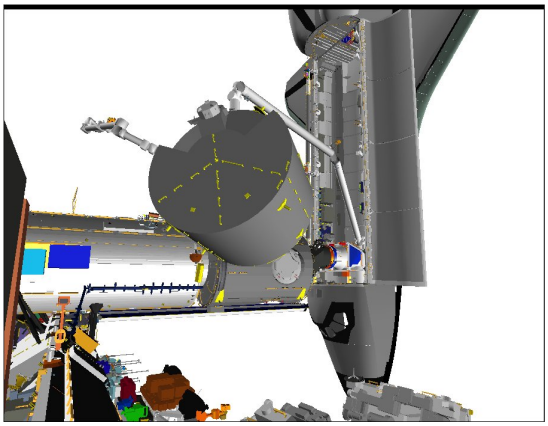

P1 LOOB (120,10)

Step 17:
Drive EP- (for 44.0°)
From -35.0° to -79.0°

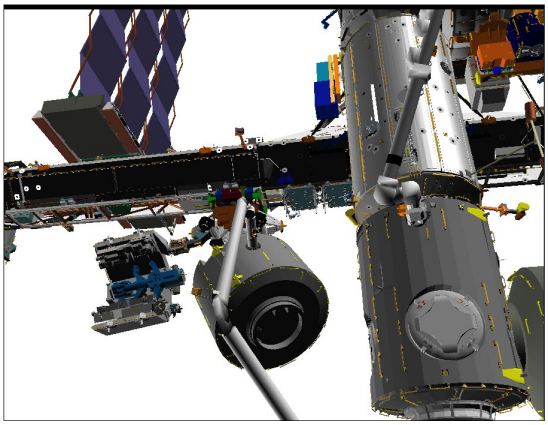

CCTV B (-10,30)

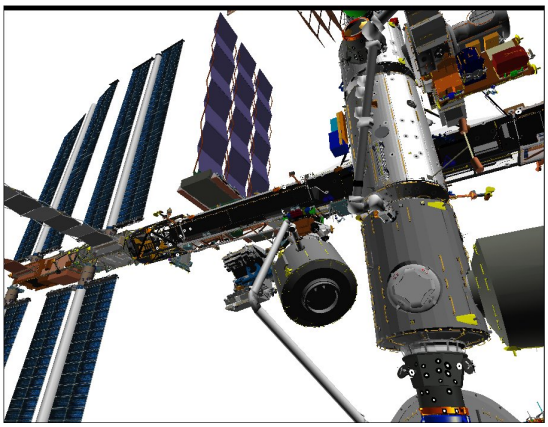

CCTV C (-30,30)

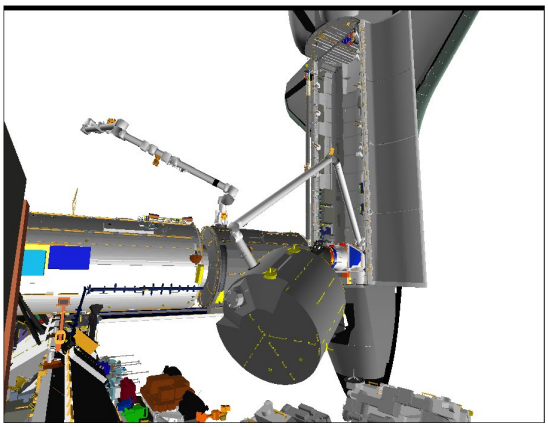

P1 LOOB (120,10)

Step 18:
Drive SP- (for 44.5°)
From +130.0° to +85.5°

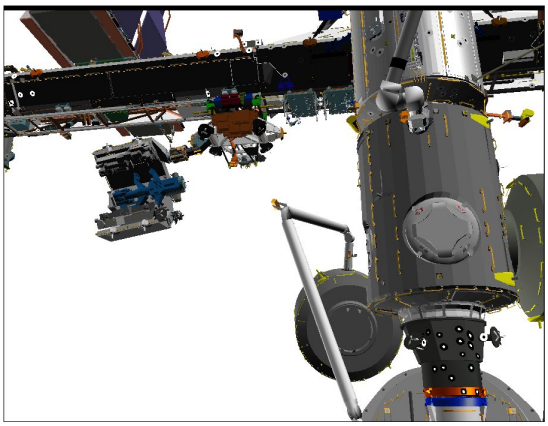

CCTV B (-10,20)

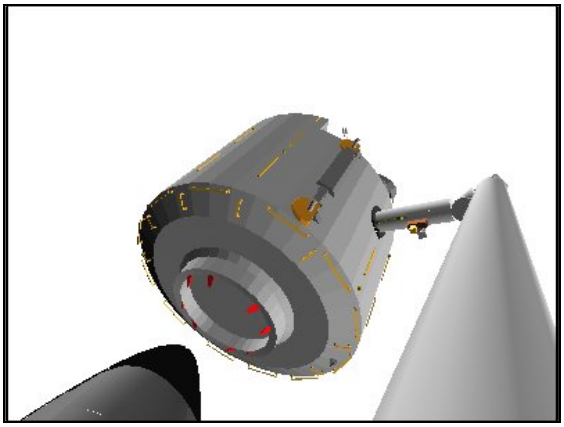

ELBOW (-30,-10)

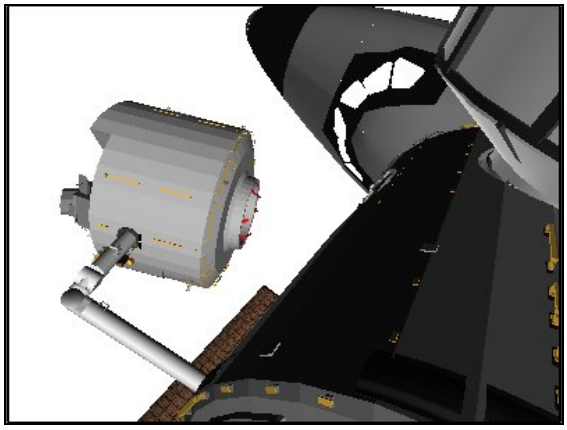

US LAB (-120,-30)

Step 19:

Drive WY+ (for 58.5°)

From -30.0° to +28.5°

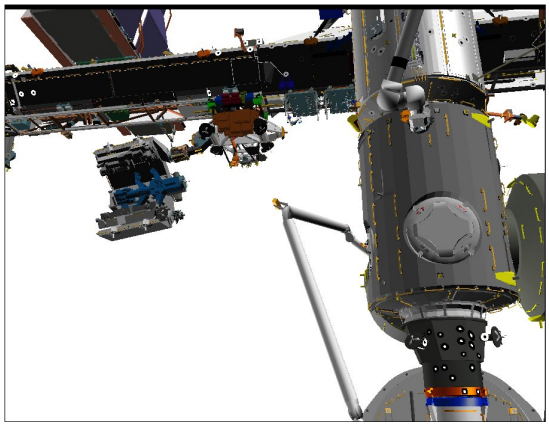

CCTV B (-10,20)

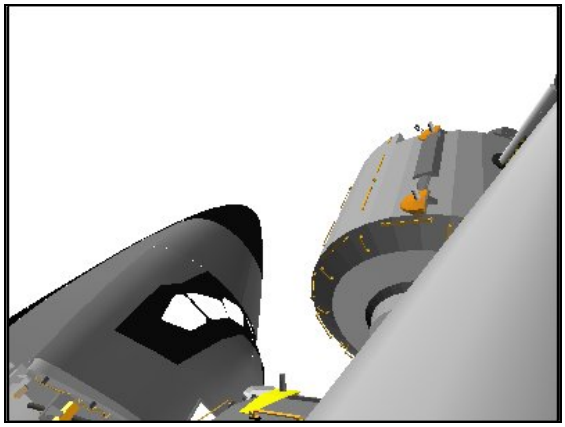

ELBOW (-40,-30)

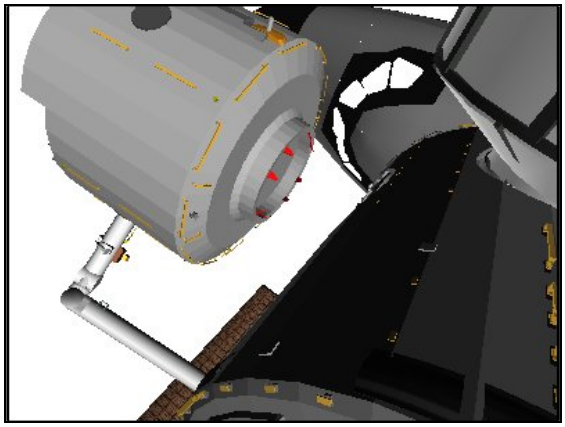

US LAB (-120,-30)

1. SETUP FOR INSTALLATION
   Install JLP CBCS CCTV OVERLAY
   √CBCS setup complete

DNLK MON 1	CBCS
DTV MON 2	B
MON 1 (V10/L)	Elbow

If SINGLE MODE available:

SM 94 PDRS CONTROL

PL ID, ITEM 3 +4 EXEC

INIT ID, ITEM 24 +4 EXEC

JLP PRE-INSTALL posn:

	X	Y	Z	PITCH	YAW	ROLL	PL ID
√	-478	0	-636	180	1	89	4
	SY	SP	EP	WP	WY	WR	
√	-162.4	+85.5	-79.0	-85.6	+28.5	+179.2	

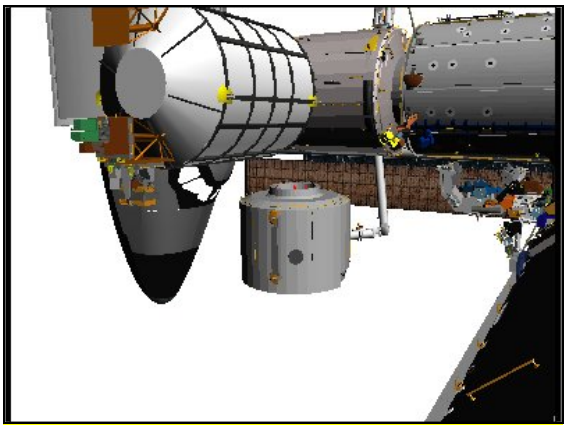

S1 OUTBOARD LOWER (60,-10)

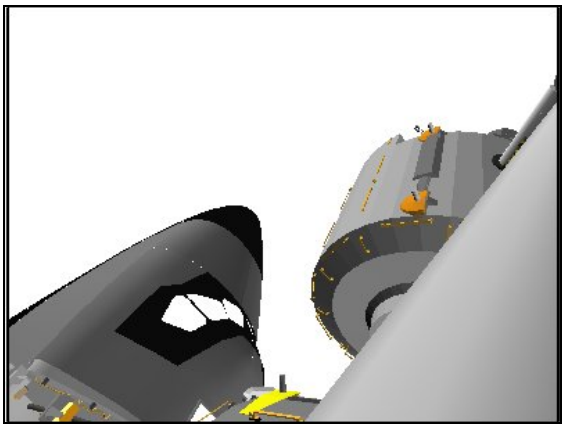

ELBOW (-40,-30)

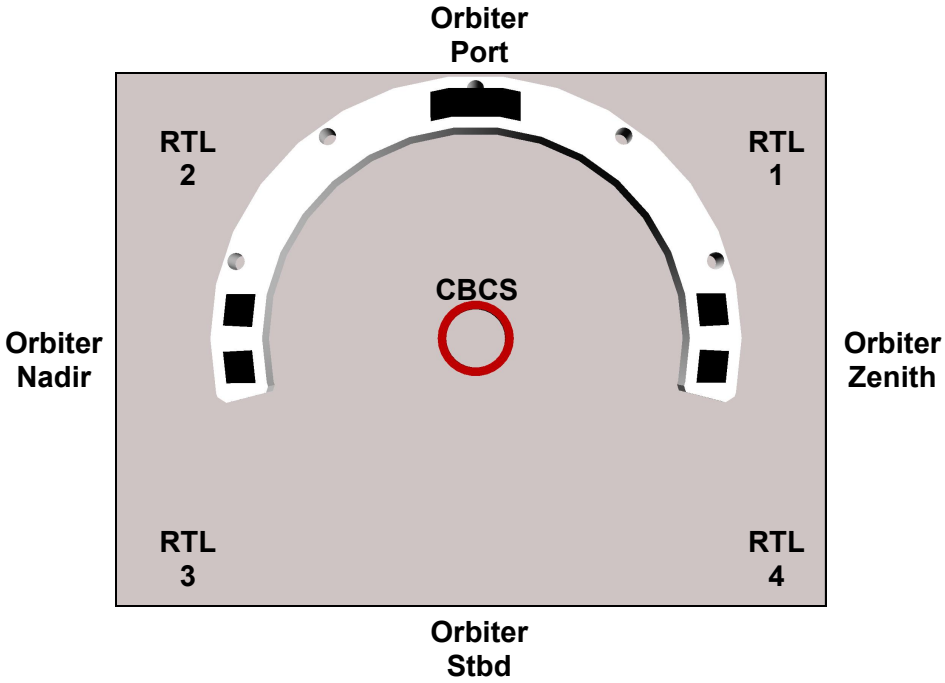

2. SJ MNVR JLP READY-TO-LATCH POSN

On CBM Operator GO for maneuver to READY-TO-LATCH (1.511 NODE 2 CBM VERIFY PRE-MATE STATUS (SODF: S&M: NOMINAL: CBM) complete)

PCS MCS: MCS: Configuration: US GNC Inhibits

US GNC Inhibits

√Desat Request – Inh

If using Shuttle attitude control and attitude maintenance reqd:
When in attitude and rates damped:
DAP: FREE

If SINGLE MODE available:
RATE – as reqd (VERN within 10 ft)
BRAKES – OFF (tb-OFF)

MODE – best available

Drive joint per JLP INSTALL histogram until RTLs achieved

Expected JLP READY-TO-LATCH posn:

X	Y	Z	PITCH	YAW	ROLL	PL ID
-535	0	-635	180	0	90	4
SY	SP	EP	WP	WY	WR	
-158.5	+97.0	-90.9	-85.0	+27.8	+175.2	

Notify CBM Operator, maneuver to RTL complete

JLP SJ INSTALL

ΔSY	ΔSP	ΔEP	ΔWP	ΔWY	ΔWR
+4.0	+12.6	-12.7	+2.2	-0.8	-4.5

x	SY	SP	EP	WP	WY	WR
-477	-162.2	+84.7	-78.4	-86.4	+28.2	+179.7
-483	-161.8	+86.0	-79.9	-86.0	+28.1	+179.3
-529	-158.7	+96.1	-90.0	-84.3	+27.5	+175.8
-535	-158.2	+97.3	-91.2	-84.2	+27.4	+175.2

JLP SJ INSTALL

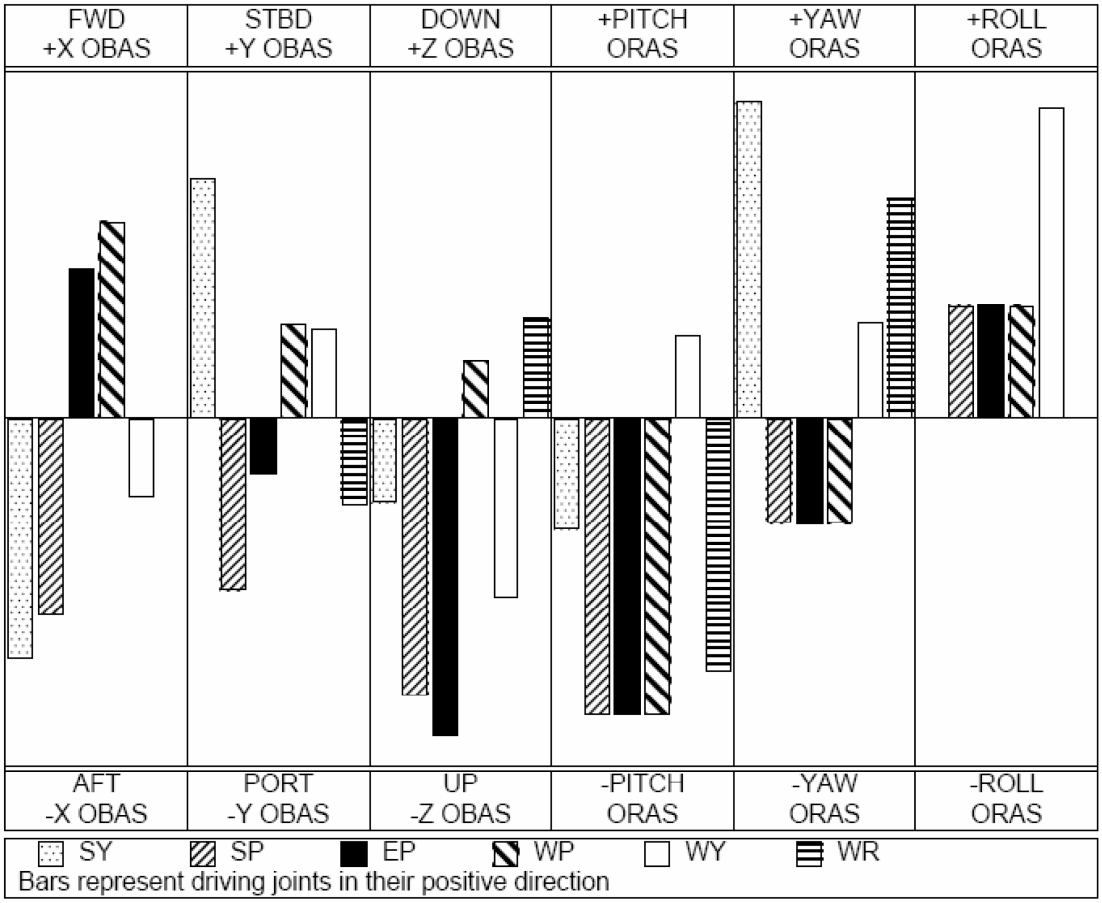

To get:	Drive:
+X (fwd)	-SY, +WP
+Y (stbd)	+SY, -SP
+Z (down)	-EP, -SP

To get:	Drive:
+PITCH	-WP, -EP
+YAW	+SY, +WR
+ROLL	+WY

Driving:	Results In:
+SY	-X (aft), +YAW
+SP	-Z (up), -PITCH
+EP	-Z (up), -PITCH

Driving:	Results In:
+WP	+X (fwd), -PITCH
+WY	-Z (up), +ROLL
+WR	+Z (down), -PITCH

ΔSY	ΔSP	ΔEP	ΔWP	ΔWY	ΔWR
+4.0	+12.6	-12.7	+2.2	-0.8	-4.5

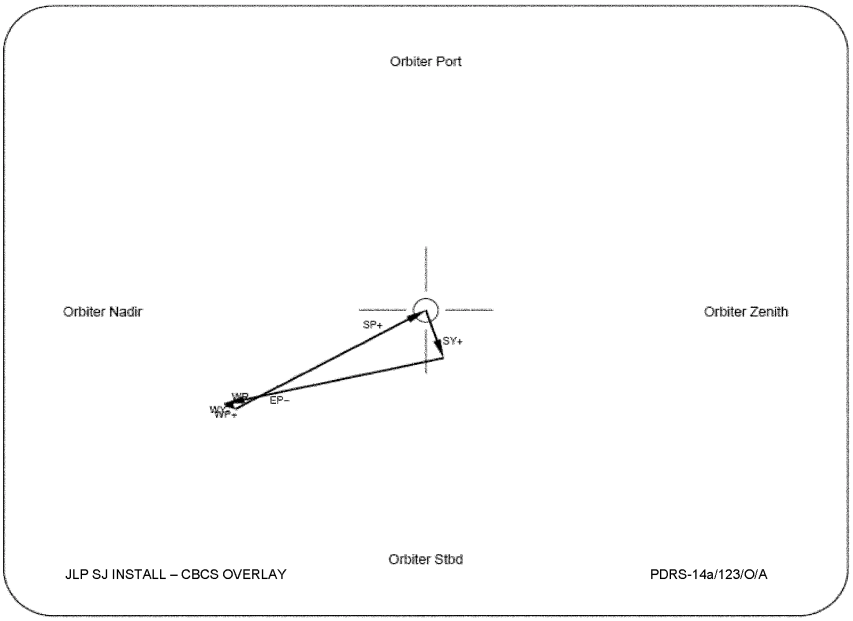

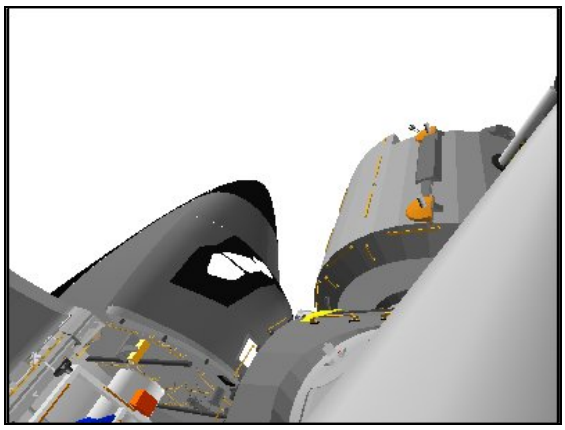

ELBOW (-40,-30)

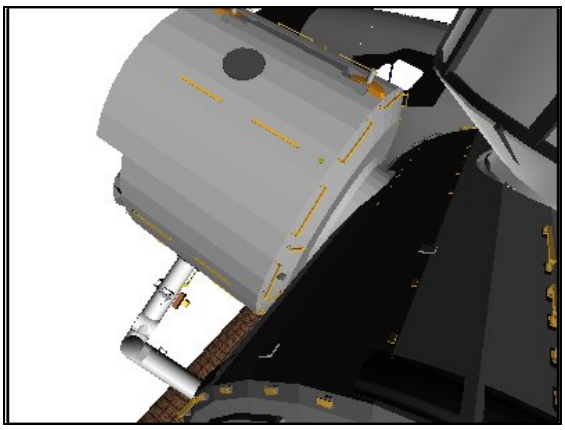

US LAB (-120,-30)

3. <u>FIRST STAGE CAPTURE</u>
   On CBM Operator GO for SRMS mode to Test Mode (2.505 NODE 2 CBM CAPTURE/ABOLT-SHUTTLE RMS, steps 1-2 complete):

   If TEST MODE available:

   <u>NOTE</u>
   CNTL ERR lt and S96 PDRS CNTL msg may occur when Auto Brakes inhibited and during CBM Second Stage Capture

   SM 94 PDRS CONTROL
   AUTO BRAKE INH – ITEM 10 EXEC (*)

   MODE – TEST, ENTER
   RHC RATE – COARSE (RATE MIN tb-OFF)

   Notify CBM Operator, RMS Mode to Test Mode complete; GO for second stage Capture

4. <u>SECOND STAGE CAPTURE/A BOLTS</u>
   On CBM Operator GO for SRMS Brakes ON (2.505 NODE 2 CBM CAPTURE/ABOLT-SHUTTLE RMS, steps 3-4 complete)

   If TEST MODE available:
   SM 94 PDRS CONTROL
   AUTO BRAKE ENA – ITEM 9 EXEC (*)

   If SINGLE MODE available:
   BRAKES – ON (tb-ON)
   MODE – not DIRECT

   Notify SSRMS Operator, JLP Install Complete and SRMS at JLP Install posn

   JLP INSTALL posn:

	X	Y	Z	PITCH	YAW	ROLL	PL ID
Expected	-540	0	-635	180	0	90	4
	SY	SP	EP	WP	WY	WR	
Expected	-158.1	+98.1	-91.9	-84.9	+27.8	+174.7	

   If using Shuttle attitude control and attitude maintenance reqd:
   DAP: LVLH

When rates damped:

DAP: FREE > 2 sec

DAP: AUTO

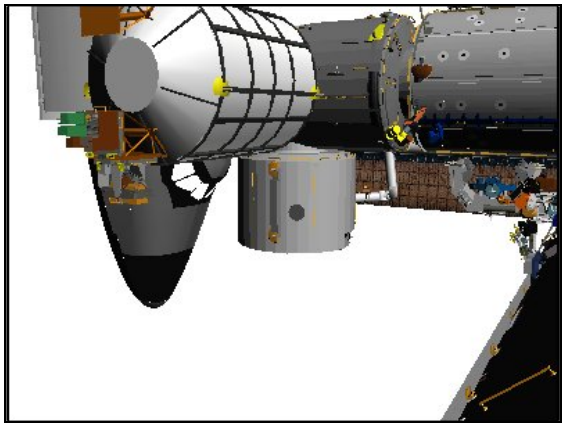

S1 OUTBOARD LOWER (60,-10)

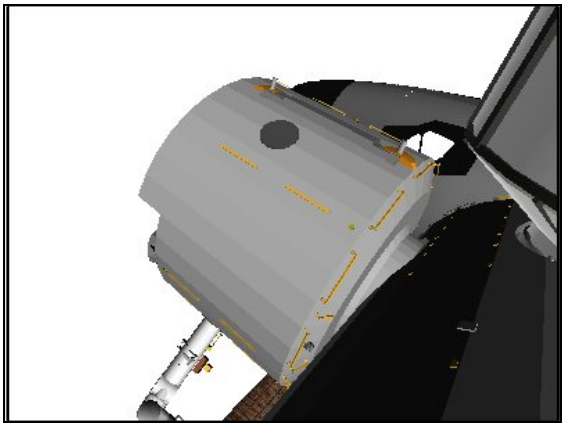

US LAB (-125,-20)

1. SETUP

On SSRMS Operator GO for JLP Ungrapple and SSRMS at OBSS PRE-GRAPPLE posn:

SR	SY	SP	EP	WP	WY	WR
-81.5	+121.6	+166.3	+121.9	-18.3	+3.3	+229.5

A7U CCTV – config for ungrapple
– RMS WRIST, zoom 34.0 HFOV
focus 5 ft

If SINGLE MODE available:
SM 94 PDRS CONTROL
PL ID, ITEM 3 +0 EXEC
INIT ID, ITEM 24 +0 EXEC

2. SJ JLP UNGRAPPLE

DNLK MON 1	EE
DTV MON 2	B
MON 1 (V10/L)	US LAB (P1 Outboard Lower)

If SINGLE MODE available:
RATE – as reqd (VERN within 10 ft)
BRAKES – OFF (tb-OFF)

MODE – best available

CAUTION
Monitor EE tb timing to prevent EE motor burnout

EE MODE – MAN
MAN CONTR – DERIGID (hold until DERIGID tb-gray, 5 sec max)
RELEASE sw – depress (hold until OPEN tb-gray, 3 sec max)

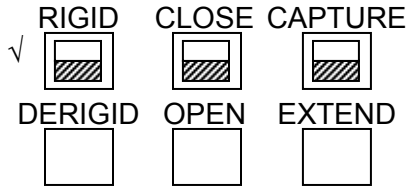

CRITICAL TIMES (28 sec total):
DERIGID tb – gray, 5 sec max, then
OPEN tb – gray, 3 sec max, then

3. MNVR ARM CLEAR OF JLP
Drive joints per JLP SJ UNGRAPPLE – WRIST CCTV OVERLAY until EE clear of grapple fixture

EE MAN CONTR – DERIG (hold until EXTEND tb-gray, 20 sec max)
MODE – OFF

	RIGID	CLOSE	CAPTURE
√	▨	▨	▨
	DERIGID	OPEN	EXTEND
	☐	☐	☐

CRITICAL TIMES (28 sec total):
EXTEND tb – gray, 20 sec max

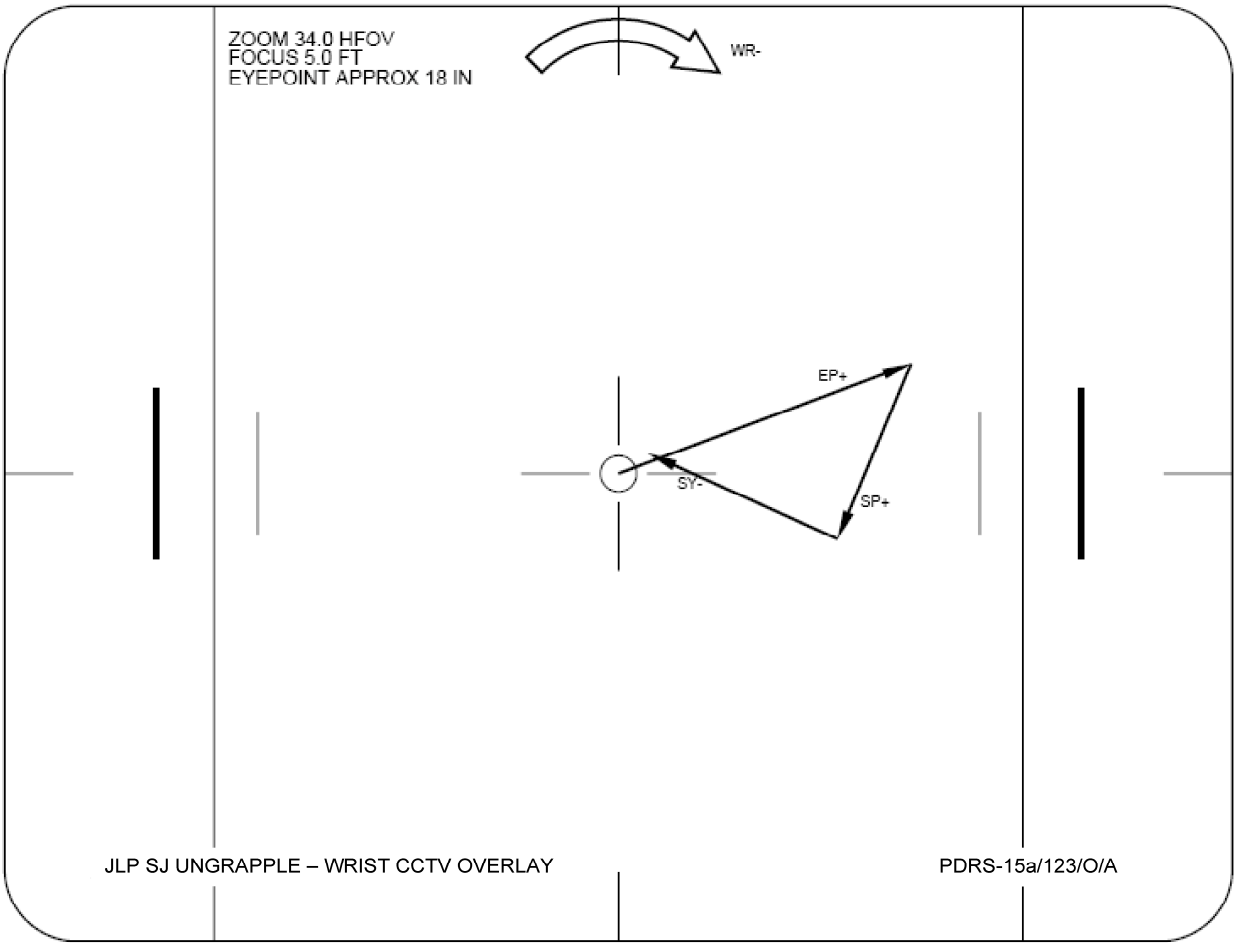

4. MNVR TO OBSS PRE-GRAPPLE

DNLK MON 1	B (C)
DTV MON 2	A
MON 1 (V10/L)	P1 Outboard Lower
MON 2 (V10/R)	Elbow

Mnvr to OBSS PRE-GRAPPLE posn:

			SY	SP	EP	WP	WY	WR	
Installed JLP Pre-Grapple			-164.8	+97.2	-80.0	-99.4	+28.9	+182.2	
1:	SP	+		+130.0					*
2:	SY	+	-20.0						*
3:	SP	–		+90.0					
4:	SY	+	+24.4						
5:	EP	+			-34.4				
6:	SP	–		+64.7					
7:	WP	–				-99.6			
8:	WY	–					+11.3		
9:	WR	–						-99.0	
OBSS Pre-Grapple			+24.4	+64.7	-34.4	-99.6	+11.3	-99.0	

X	Y	Z	PITCH	YAW	ROLL	PL ID
-1017	-364	-674	284	0	270	0

*Expect SINGULAR lt

BRAKES – ON (tb-ON)
MODE – not DIRECT

PARAM – PORT TEMP
JOINT – CRIT TEMP

Step 1:
Drive SP+ (for 32.8°)
From +97.2° to +130.0°

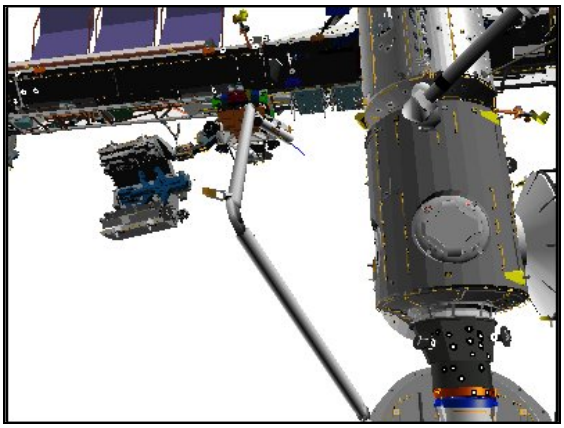

CCTV B (-10,20)

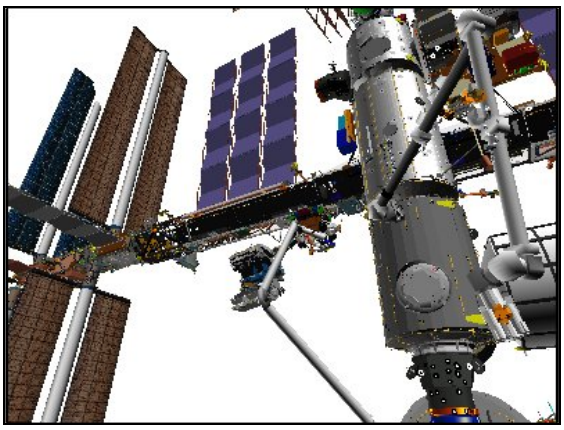

CCTV C (-30,30)

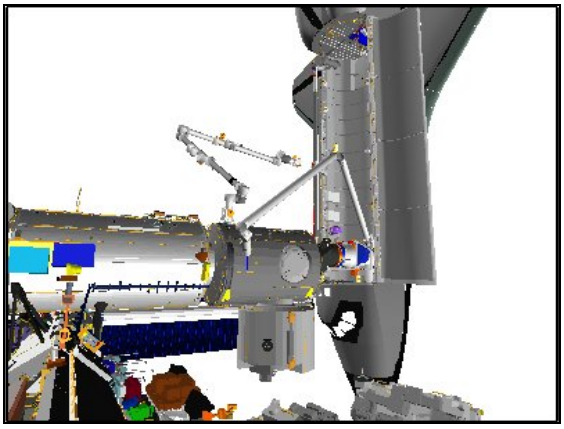

P1 LOOB (120,10)

Step 2:
Drive SY+ (for 144.8°)
From -164.8° to -20.0°

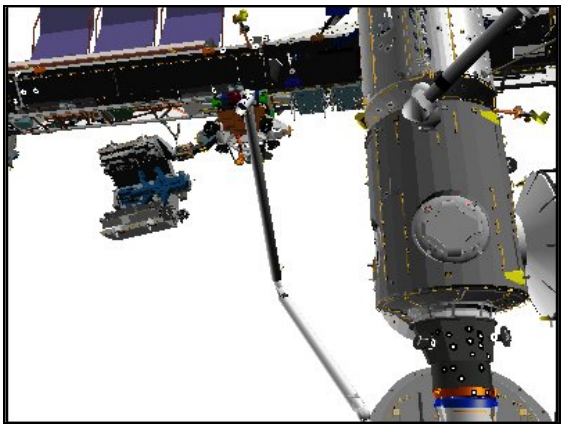

CCTV B (-10,20)

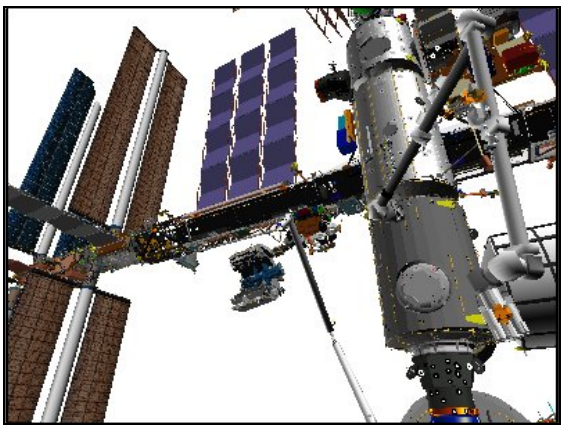

CCTV C (-30,30)

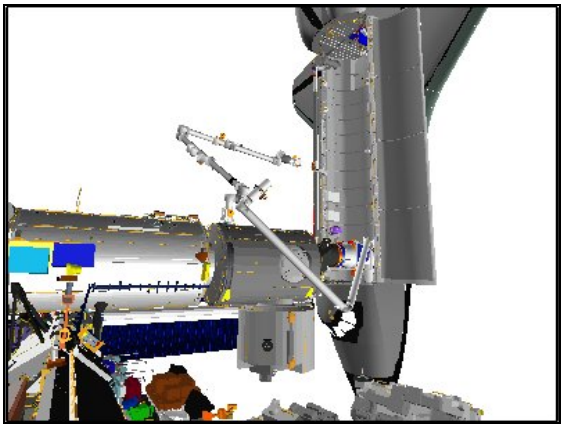

P1 LOOB (120,10)

Step 3:
Drive SP- (for 40.0°)
From +130.0° to +90.0°

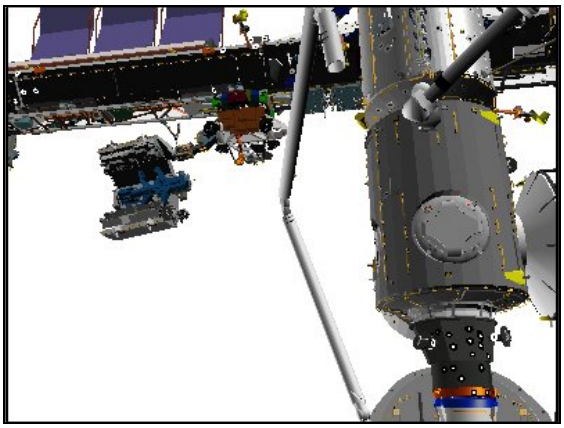

CCTV B (-10,20)

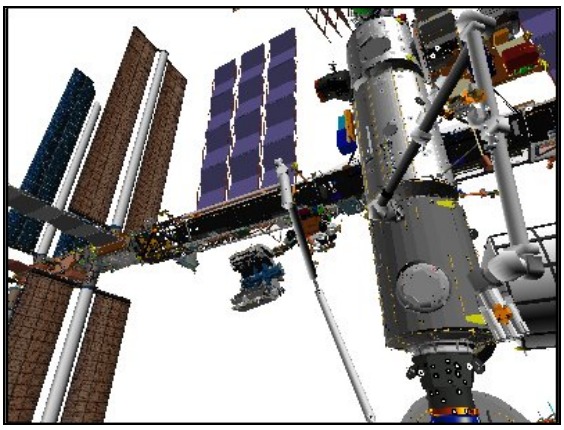

CCTV C (-30,30)

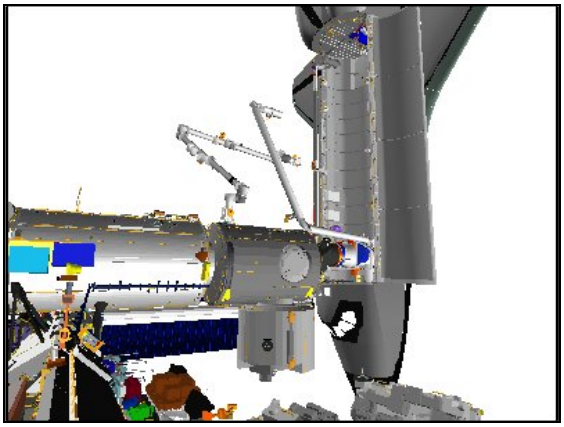

P1 LOOB (120,10)

Step 4:
Drive SY+ (for 44.4°)
From -20.0° to +24.4°

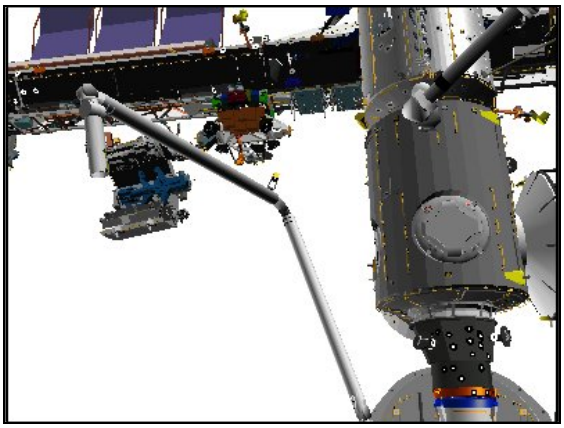

CCTV B (-10,20)

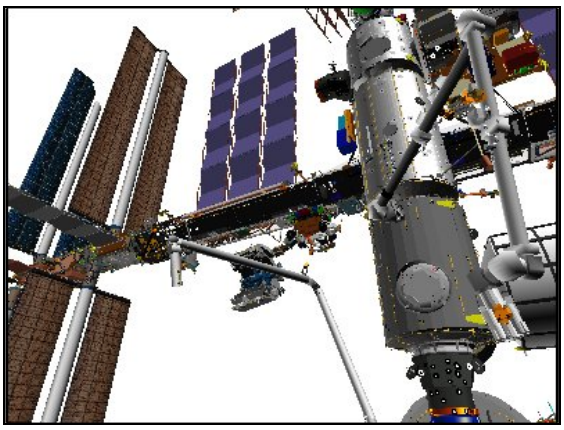

CCTV C (-30,30)

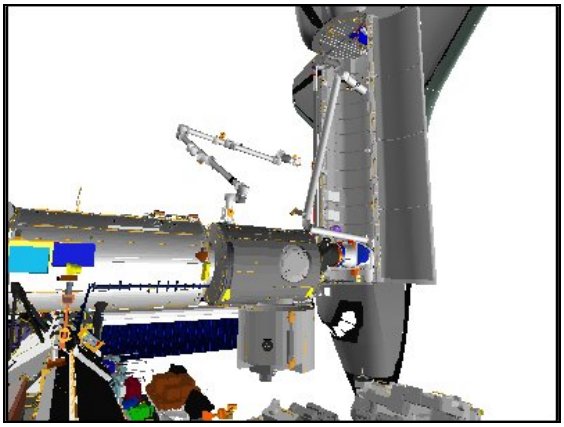

P1 LOOB (120,10)

Step 5:
Drive EP+ (for 45.6°)
From -80.0° to -34.4°

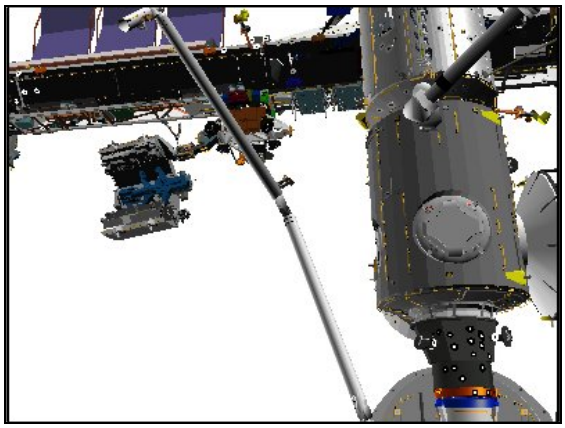

CCTV B (-10,20)

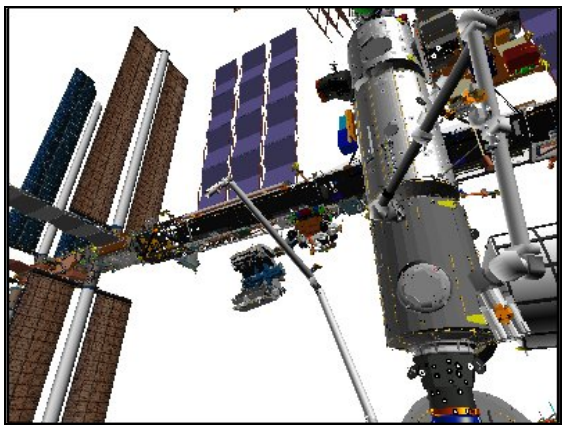

CCTV C (-30,30)

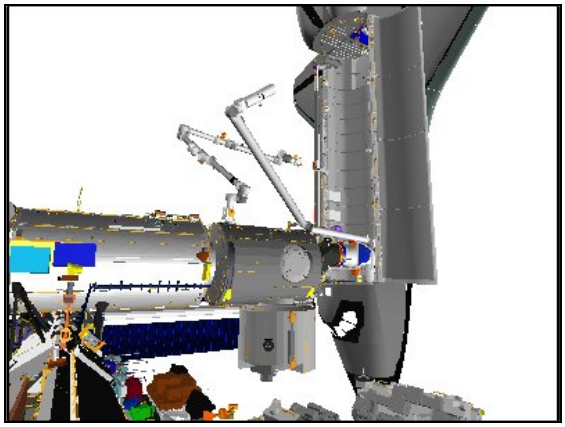

P1 LOOB (120,10)

Step 6:
Drive SP- (for 25.3°)
From +90.0° to +64.7°

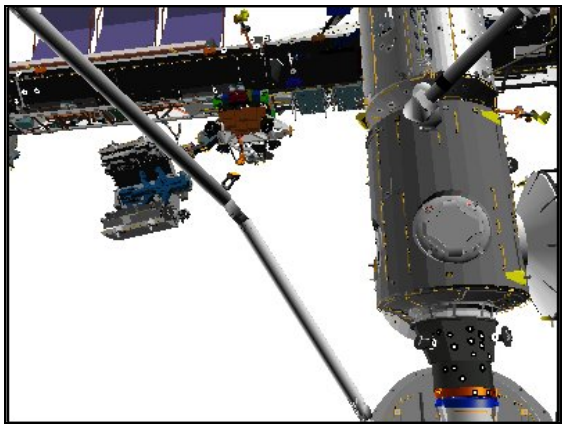

CCTV B (-10,20)

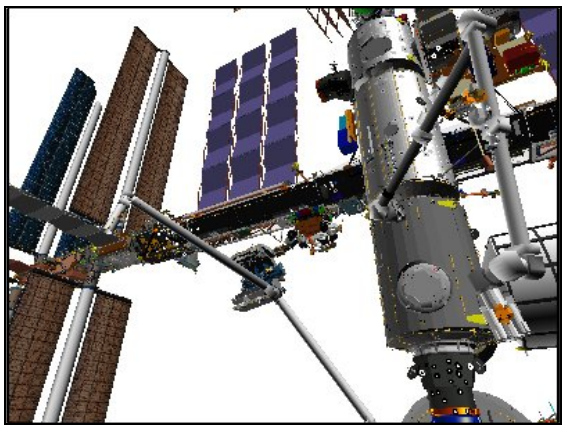

CCTV C (-30,30)

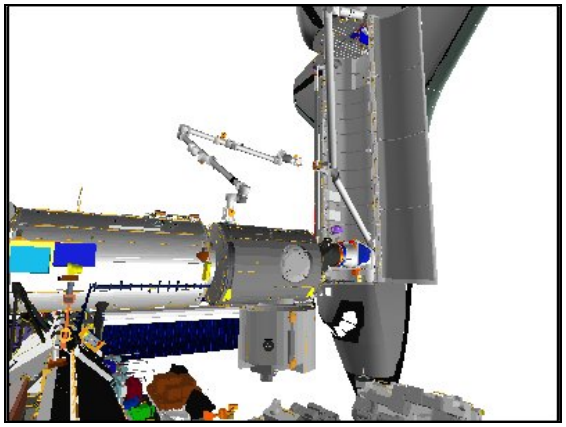

P1 LOOB (120,10)

Step 7:
Drive WP- (for 0.2°)
From -99.4° to -99.6°

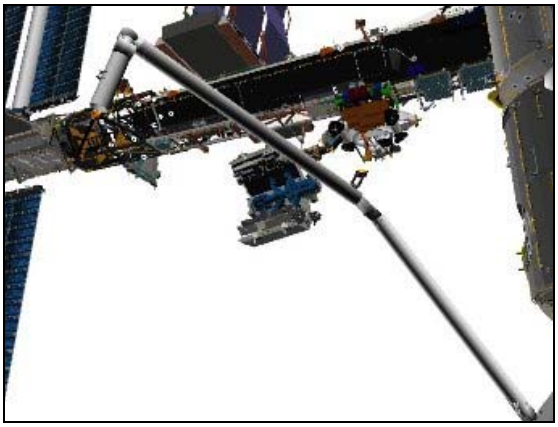

CCTV B (-25,20)

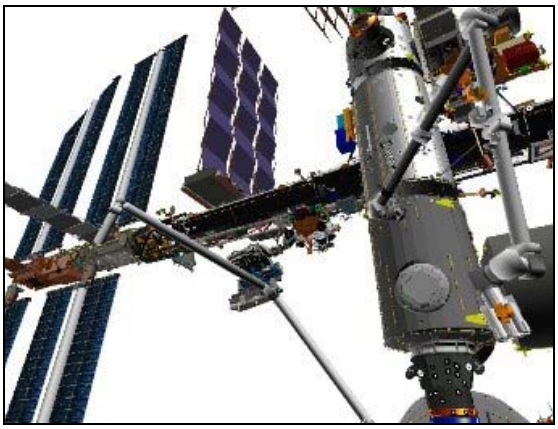

CCTV C (-30,30)

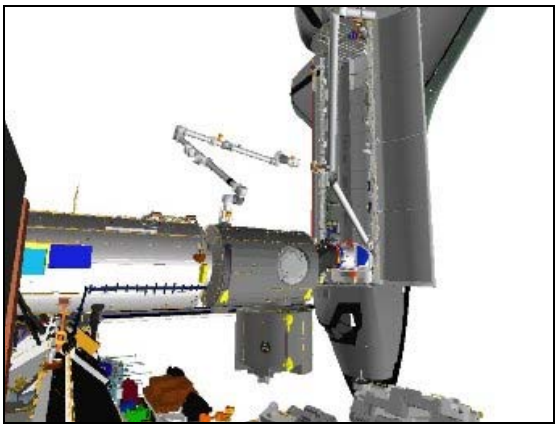

P1 LOOB (120,10)

Step 8:
Drive WY- (for 17.6°)
From +28.9° to +11.3°

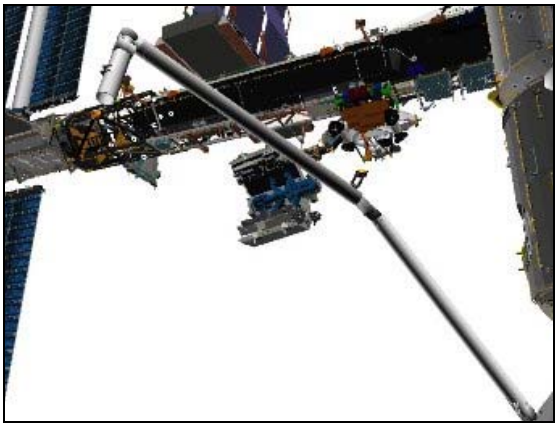

CCTV B (-25,20)

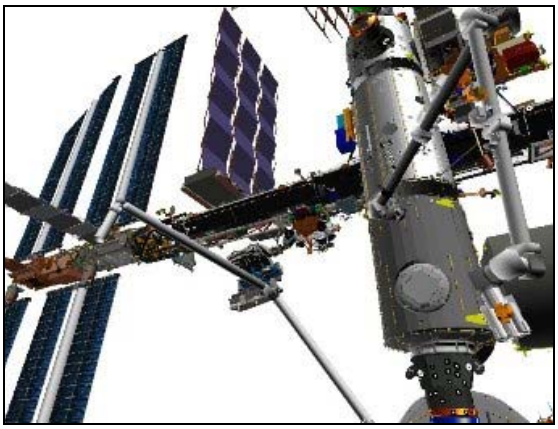

CCTV C (-30,30)

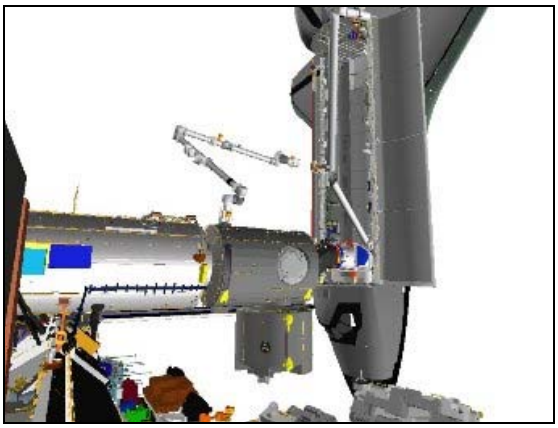

P1 LOOB (120,10)

Step 9:

Drive WR- (for 281.2°)

From +182.2° to -99.0°

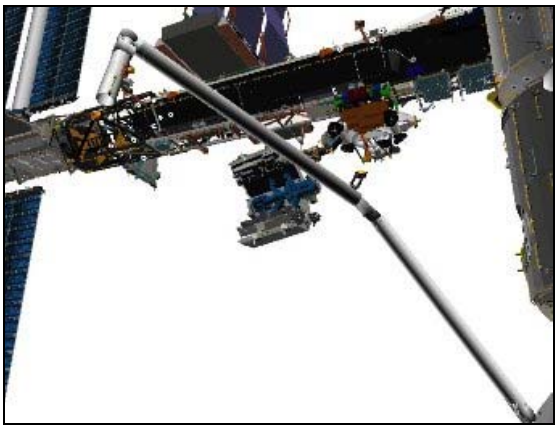

CCTV B (-25,20)

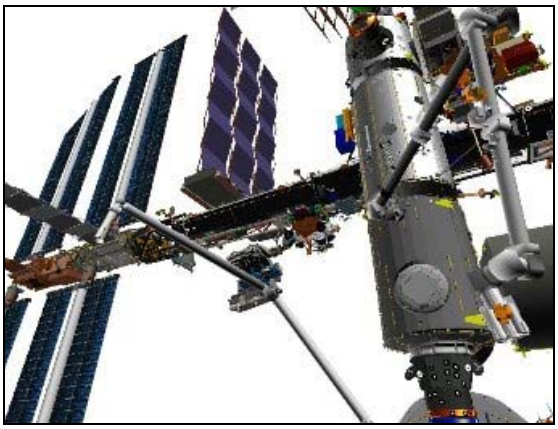

CCTV C (-30,30)

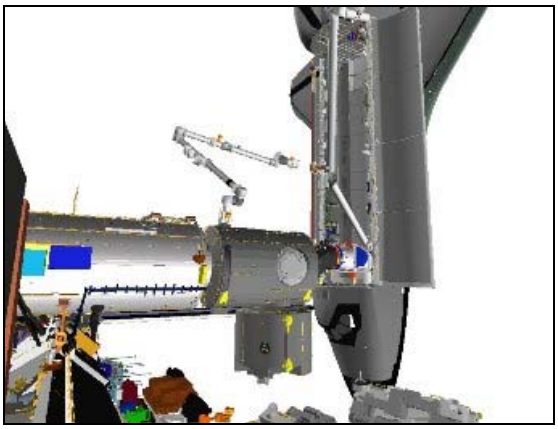

P1 LOOB (120,10)

1. MNVR TO JLP PRE-INSTALL
   On Station GO for JLP backoff

DNLK MON 1	CBCS
DTV MON 2	B
MON 1 (V10/L)	Elbow

PCS

MCS: MCS: Configuration: US GNC Inhibits

US GNC Inhibits

√Desat Request – Inh

If using Shuttle attitude control:
DAP: FREE

SM 94 PDRS CONTROL

√PL ID, ITEM 3: 4
√INIT ID, ITEM 24: 4

RHC

RATE – VERN (RATE MIN tb-ON)
BRAKES – OFF (tb-OFF)
MODE – PL, ENTER

Mnvr to JLP PRE-INSTALL posn (within 1°):

X	Y	Z	PITCH	YAW	ROLL	PL ID
-478	0	-636	180	1	89	4
SY	SP	EP	WP	WY	WR	
-162.4	+85.5	-79.0	-85.6	+28.5	+179.2	

BRAKES – ON (tb-ON)

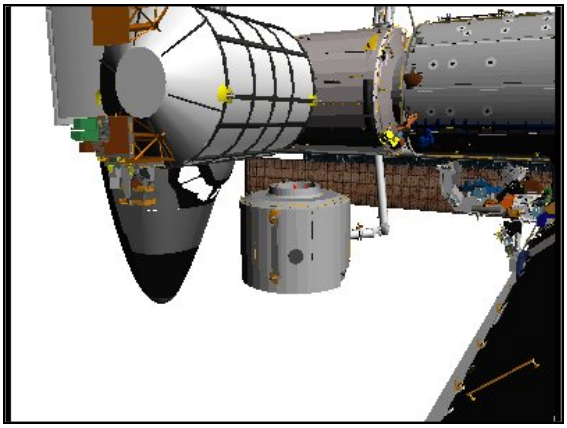

S1 OUTBOARD LOWER (60,-10)

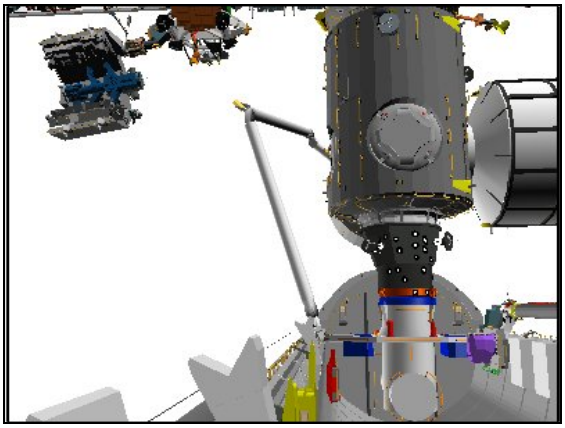

CCTV B (-5,10)

If using Shuttle attitude control and attitude maintenance reqd:
DAP: LVLH
When rates damped:
DAP: FREE > 2 sec
DAP: AUTO
When in attitude and rates damped:
DAP: FREE

2. <u>MNVR TO JLP INTERMEDIATE POSN</u>

DNLK MON 1	B
DTV MON 2	Elbow
MON 1 (V10/L)	S1 Outboard Lower (US LAB)

SM 94 PDRS CONTROL
PL ID, ITEM 3 +3 EXEC
INIT ID, ITEM 24 +3 EXEC

√RATE – VERN (RATE MIN tb-ON)
BRAKES – OFF (tb-OFF)
MODE – SINGLE, ENTER

Drive WY(-) to -40.0

JLP REBERTH ACAS START posn:

	X	Y	Z	PITCH	YAW	ROLL	PL ID
√	-352	-138	-601	338	353	294	3
	SY	SP	EP	WP	WY	WR	
√	-162.4	+85.5	-79.0	-85.6	-40.0	+179.2	

BRAKES – ON (tb-ON)

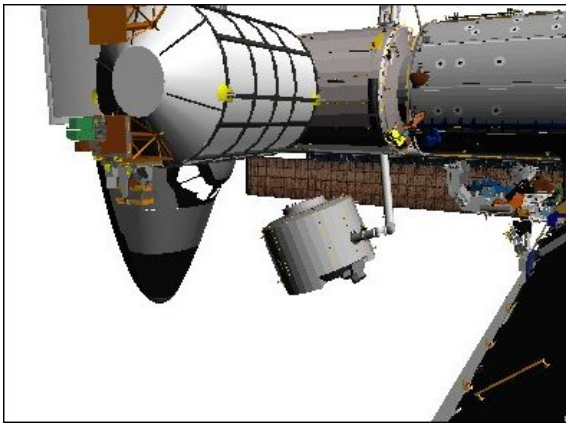

S1 OUTBOARD LOWER (60,-10)

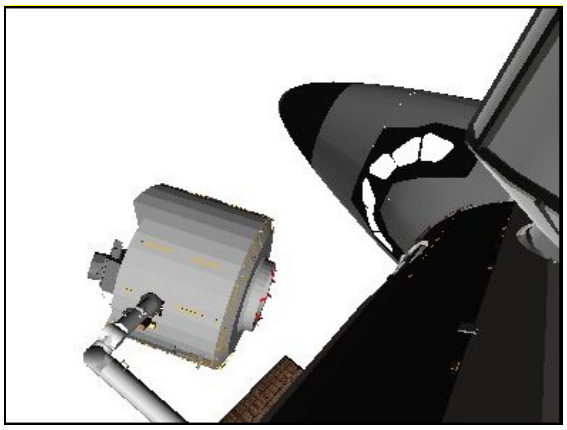

US LAB (-125,-20)

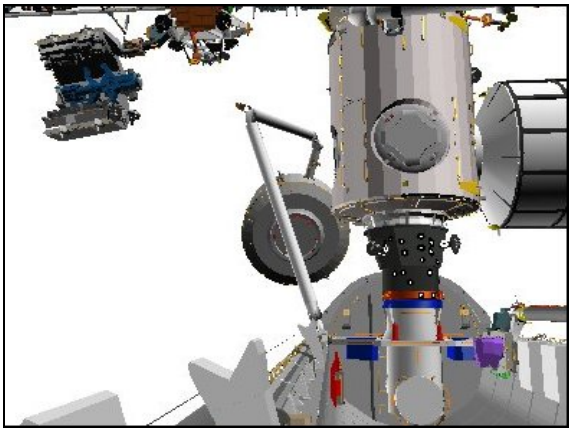

CCTV B (-5,10)

If using Shuttle attitude control and attitude maintenance reqd:
DAP: LVLH
When rates damped:
DAP: FREE > 2 sec
DAP: AUTO
When in attitude and rates damped:
DAP: FREE

3. MNVR TO JLP HOVER POSN

DNLK MON 1	A (Elbow)
DTV MON 2	B (C)
MON 1 (V10/L)	P1 (S1) Outboard Lower

NOTE
Coarse rates allowed between Pts 141 and 144

AUTO 1 – ITEM 13 +6 EXEC

√RATE – VERN (RATE MIN tb-ON)
BRAKES – OFF (tb-OFF)

MODE – AUTO 1, ENTER

√START PT, ITEM 17: 135

√READY lt – ON
AUTO SEQ – PROCEED (IN PROG lt on)

Auto Pos #	X/ SY	Y/ SP	Z/ EP	PITCH/ WP	YAW/ WY	ROLL/ WR	PL ID
135	-352	-138	-601	338	353	294	3
	-162.4	+85.5	-79.0	-85.6	-40.0	+179.2	
136	-313	-146	-590	303	333	294	3
	-166.7	+95.2	-98.6	-36.6	-37.5	+178.8	
137	-543	-253	-736	163	335	250	3
	-167.3	+135.1	-134.9	+83.9	-35.9	+179.3	
138	-735	-300	-920	103	344	269	3
	-144.2	+120.3	-74.4	+101.4	+0.3	-180.0	
139	-765	-281	-1005	112	339	295	3
	-146.0	+102.9	-35.8	+79.0	+23.9	+179.2	
140	-774	-282	-1018	105	327	289	3
	-125.3	+96.6	-23.8	+67.0	+37.1	+179.6	
141	-817	-306	-1017	5	312	200	3
	-59.7	+93.1	-21.5	+23.9	+53.0	+179.2	
142	-922	-275	-1000	315	346	173	3
	-33.8	+81.2	-20.7	+5.8	+48.9	+164.3	
143	-1054	-212	-938	243	58	171	3
	-24.4	+71.0	-21.0	-31.3	+39.4	+107.4	
144	-1184	-103	-861	41	67	14	3
	-13.8	+55.6	-21.4	-30.0	-9.5	+77.2	
145	-1161	0	-574	0	0	0	3
	-8.3	+36.1	-22.0	-99.4	-29.4	+29.4	

BRAKES – ON (tb-ON)

If using Shuttle attitude control and attitude maintenance reqd:
DAP: LVLH
When rates damped:
DAP: FREE > 2 sec
DAP: AUTO

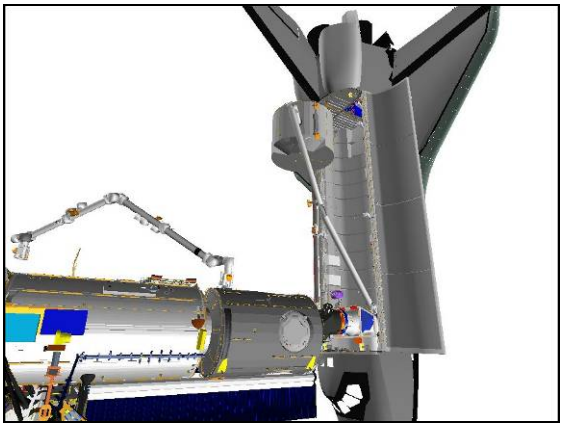

P1 LOOB (120,20)

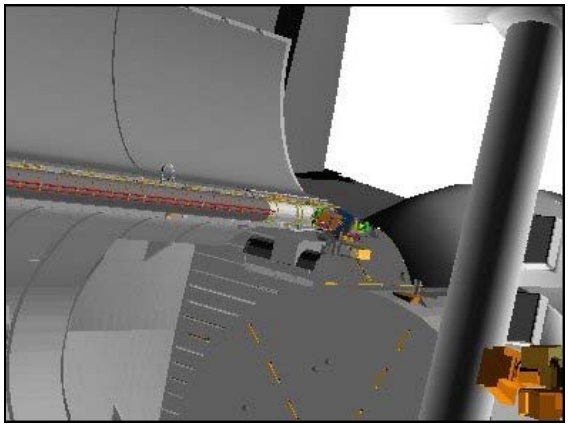

US LAB (-35,-20)

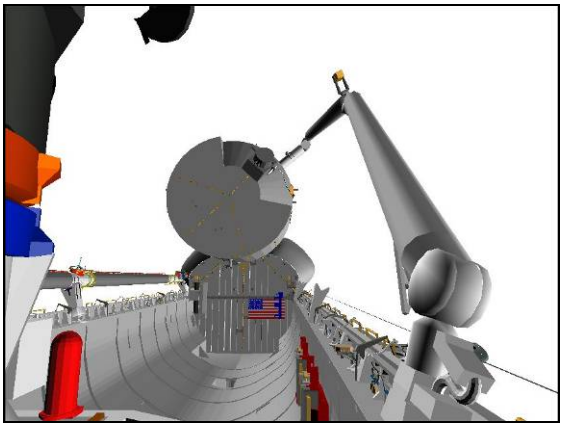

CCTV A (0,10)

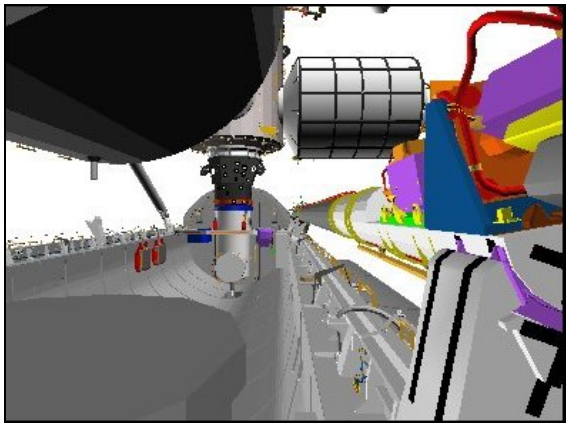

CCTV C (0,0)

4. <u>JLP BERTH</u>

DNLK MON 1	D/A Mux (Elbow)
DTV MON 2	B/C Mux
MON 1 (V10/L)	US Lab (P1 Outboard Lower)

SM 94 PDRS CONTROL
√PL ID, ITEM 3: 3
√INIT ID, ITEM 24: 3

A7U PL BAY FLOOD AFT (two) – OFF
MID (two) – OFF

PCS MSS: SSRMS: Thrusters: Thruster Controls for MSS Ops

Verify ‘Desat Request’ Inhibit

If using Shuttle attitude control:
When in attitude and rates damped:
DAP: FREE

CAUTION
Monitor clearances between STBD trunnions and OBSS during unberth with US LAB cam. Minimum clearance of approximately 4.5 inches expected at approx Z = -445

√RATE – VERN (RATE MIN tb-ON)
BRAKES – OFF (tb-OFF)
MODE – ORB LD, ENTER

Mnvr to JLP BERTH posn (insert data from JLP GRAPPLE):

	X	Y	Z	PITCH	YAW	ROLL	PL ID
							3
Expected	-1161	0	-414	0	0	0	3
	SY	SP	EP	WP	WY	WR	
Expected	-1.8	+36.7	-54.7	-71.0	-29.7	+22.0	

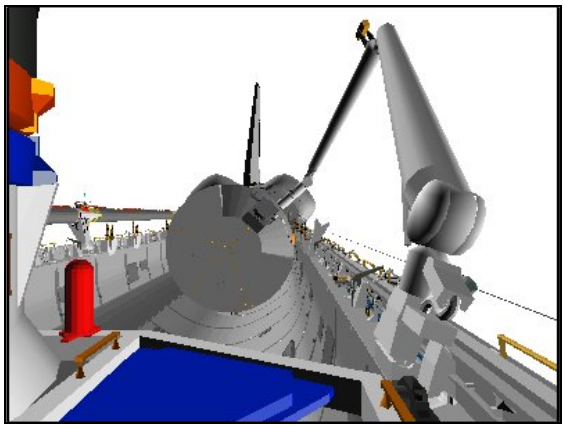

CCTV A (0,0)

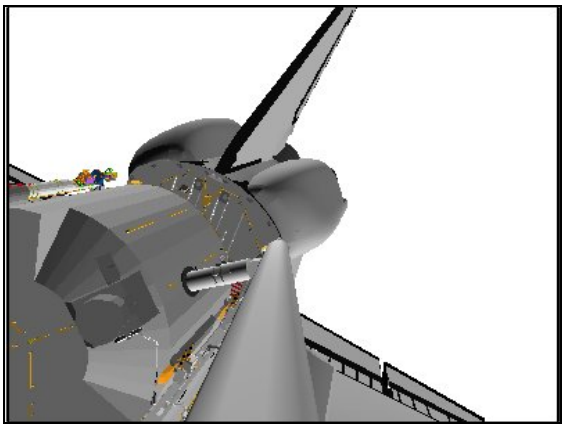

ELBOW (0,0)

5. ACTIVATE LATCHES

NOTE
When MCA LOGIC switches taken OFF, KU will mode to standby. MPM and MRL tbs – bp

MA73C:A MCA LOGIC MNC MID 2 – OFF
:B MNB MID 4 – OFF

A6U √PL RETEN LAT (five) – OFF
PL SEL – 1
LOGIC PWR SYS 1,2 – ON
R13L BAY MECH PWR SYS 1,2 (two) – ON

SM 97 PL RETENTION
√PL SEL 1 RDY-FOR-LAT 1,2,3,4 (eight) – 1
√LAT 1,2,3,4 (eight) – 0

* If any LAT msw shows '1', drive latch *
* for single motor time (60 sec) *

6. AKA LATCH

A6U √PL RETEN LAT 5 tb – REL
√RDY 5 tb − bp

Note single motor times (> 30 sec)
PL RETEN LAT 5 − LAT (tb-LAT), 60 sec max
− OFF
√RDY 5 tb − gray

7. PRLA LATCH

√PL RETEN LAT 1,2,3,4 tb − REL
√RDY 1,2,3,4 tb − gray

Note single motor times (> 30 sec)
PL RETEN LAT 3,4 (two) − LAT (tb-LAT), 60 sec max
− OFF
1,2 (two) − LAT (tb-LAT), 60 sec max
− OFF
BRAKES – ON (tb-ON)

If using Shuttle attitude control and attitude maintenance reqd:
DAP: LVLH
When rates damped:
DAP: FREE > 2 sec
DAP: AUTO

8. DEACTIVATING LATCHES

PL RETEN LOGIC PWR SYS (1,2) − OFF
R13L BAY MECH PWR SYS (1,2) − OFF

MA73C:A MCA LOGIC MNC MID 2 – ON
:B MNB MID 4 – ON

9. JLP UNGRAPPLE

DNLK MON 1	EE (Elbow)
DTV MON 2	A (B)

SM 94 PDRS CONTROL
PL ID, ITEM 3 +0 EXEC
INIT ID, ITEM 24 +0 EXEC

RATE – VERN (RATE MIN tb-ON)
BRAKES – OFF (tb-OFF)
MODE – END EFF, ENTER

CAUTION
Monitor EE tb timing to prevent EE motor burnout

SM 169 PDRS STATUS
EE MODE – AUTO
RELEASE sw – depress (mom)

When OPEN tb – gray, mnvr arm clear of grapple pin

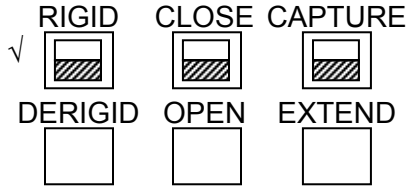

CRITICAL TIMES (28 sec total):
DERIGID tb – gray, 5 sec max, then
OPEN tb – gray, 3 sec max, then
EXTEND tb – gray, 20 sec max

Mnvr to JLP PRE-GRAPPLE posn:

X	Y	Z	PITCH	YAW	ROLL	PL ID
-1151	-123	-505	270	311	0	0
SY	SP	EP	WP	WY	WR	
+2.6	+40.2	-47.4	-84.2	-29.4	+16.4	

BRAKES – ON (tb-ON)
EE MODE – OFF

```
* If manual release required:                                        *
*     EE MODE          – MAN                                         *
*         MAN CONTR    – DERIGID (hold until DERIGID tb-gray, 5 sec max)*
*         RELEASE sw   – depress (hold until OPEN tb-gray, 3 sec max) *
*                                                                     *
*     Mnvr arm clear, then                                            *
*     EE MAN CONTR     – DERIGID (hold until EXTEND                   *
*                        tb-gray, 20 sec max)                         *
*         MODE         – OFF                                          *
```

10. MNVR TO OBSS PRE-GRAPPLE

SM 94 PDRS CONTROL

END POS – ITEM 18 -1 0 1 7 -3 6 4 -6 7 4 EXEC
ATT – ITEM 21 +2 8 4 +0 +2 7 0 EXEC
CMD CK – ITEM 25 EXEC (GOOD)

RHC RATE – VERN (RATE MIN tb-ON)

BRAKES – OFF (tb-OFF)
MODE – OPR CMD, ENTER (READY lt on)

AUTO SEQ – PROCEED (IN PROG lt on)

When AUTO SEQ IN PROG lt – off:
BRAKES – ON (tb-ON)

	X	Y	Z	PITCH	YAW	ROLL	PL ID
√	-1017	-364	-674	284	0	270	0
	SY	SP	EP	WP	WY	WR	
√	+24.4	+64.7	-34.4	-99.6	+11.3	-99.0	

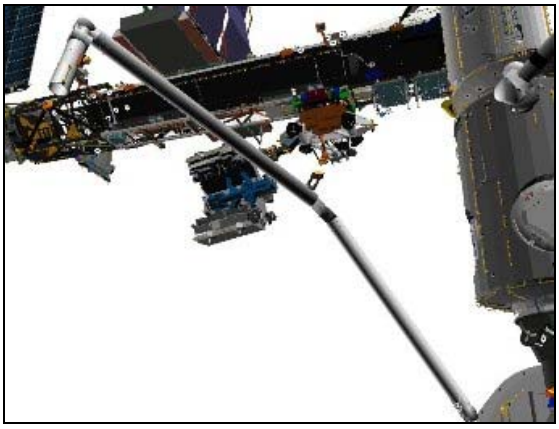

CCTV C (-20,20)

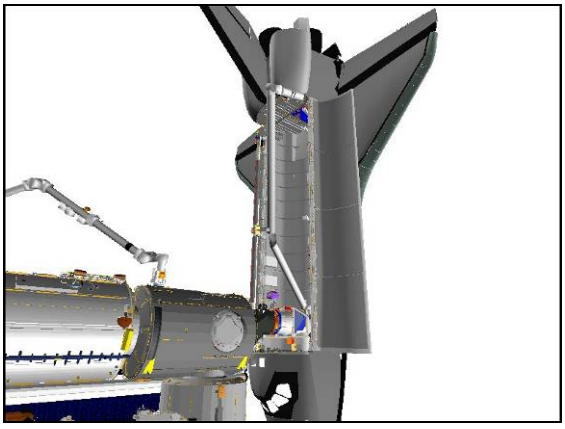

P1 LOOB (130,20)

OBSS HANDOFF

OBSS HANDOFF FROM SSRMS TO SRMS ..... FS 3-2
SRMS TO SSRMS FOR STOW ..... FS 3-6
SJ OBSS HANDOFF FROM SSRMS TO SRMS ..... FS 3-10
SRMS TO SSRMS FOR STOW ..... FS 3-14
MNVR FROM OBSS H/O FOR STOW TO UNDOCK ..... FS 3-23
CONTINGENCY OBSS REGRAPPLE AT H/O TO STOW ..... FS 3-25

OBSS HANDOFF FROM SSRMS TO SRMS

1. SETUP

SM 94 PDRS CONTROL

√PL ID, ITEM 3: 0

√INIT ID, ITEM 24: 0

Verify at OBSS PRE-GRAPPLE posn:

X	Y	Z	PITCH	YAW	ROLL	PL ID
-1017	-364	-674	284	0	270	0
SY	SP	EP	WP	WY	WR	
+24.4	+64.7	-34.4	-99.6	+11.3	-99.0	

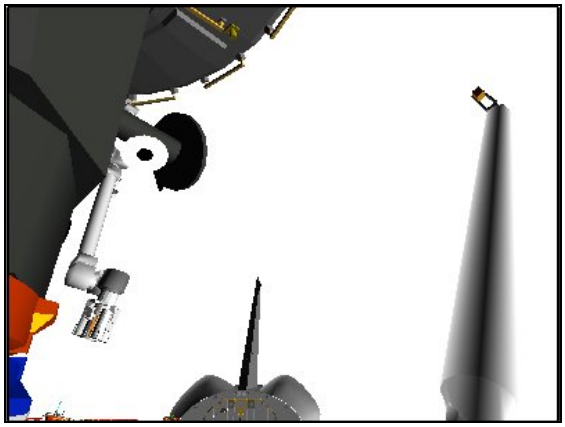

CCTV A (0,30)

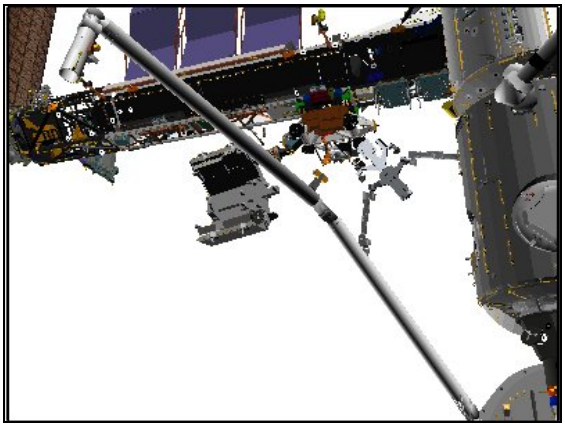

CCTV B (-20,20)

2. CONFIGURE POWER

> CAUTION
> SPEE power must be applied within 90 min to prevent sensor package damage

On SSRMS Operator GO to release STBD MRLs,
STBD RMS HTR A,B (two) – OFF

A6U EVENT TIMER MODE – UP
CNTL – START

MA73C:C cb MCA PWR AC3 3Φ MID 2 – op
√AC2 3Φ MID 2 – op
MA73C:D √AC3 3Φ MID 4 – op

R13L PL BAY MECH PWR SYS (two) – ON

3. STBD MRL RELEASE

SM 94 PDRS CONTROL

RMS STBD – ITEM 2 EXEC (*)

√STBD AFT, MID, FWD REL (six) = 0

NOTE
Expect single motor drive time for MRL release

STBD RMS RETEN LAT – REL (tb-REL) (18 sec max)
– OFF

If motor drive time > 18 sec, √MCC

SM 94 PDRS CONTROL
√STBD AFT, MID, FWD REL (six) = 1

4. RECONFIGURE POWER

R13L PL BAY MECH PWR SYS (two) – OFF

MA73C:C cb MCA PWR AC3 3Φ MID 2 – cl
√AC2 3Φ MID 2 – op
MA73C:D √AC3 3Φ MID 4 – op

Give SSRMS Operator GO for OBSS Unberth
Monitor RFL Status

After OBSS Unberth,
SM 94 PDRS CONTROL
RMS PORT – ITEM 1 EXEC (*)

5. SETUP FOR GRAPPLE

A7U CCTV – config for grapple
– install PDRS TARGET OVERLAY FOR CTVM
– RMS WRIST, ZOOM: 34.0 HFOV
FOCUS: 5 ft
Maintain eyepoint approx 18 in when using grapple overlay

DNLK MON 1	B
DTV MON 2	EE
MON 1 (V10/L)	A
MON 2 (V10/R)	P1 LOOB

R12(OBSS) √SPEE PWR – OFF
A15 √APCU 1,2 OUTPUT (two) – OFF

6. OBSS GRAPPLE AT HANDOFF POSN

On SSRMS Operator GO for SRMS OBSS Grapple and SSRMS at OBSS Handoff,

SR	SY	SP	EP	WP	WY	WR
-81.5	+181.7	+134.9	+114.4	+7.9	-5.9	+77.0

RHC RATE – VERN (RATE MIN tb-ON)
BRAKES – OFF (tb-OFF)
MODE – END EFF, ENTER

Mnvr to grapple envelope

CAUTION
Monitor EE tb timing to prevent EE motor burnout

EE MODE – AUTO
CAPTURE sw – depress (mom)

	RIGID	CLOSE	CAPTURE
√			
	DERIGID	OPEN	EXTEND

CRITICAL TIMES (28 sec total):
CAPTURE tb – gray, then
CLOSE tb – gray, 3 sec max, then
RIGID tb – gray, 25 sec max

EE MODE – OFF

MODE – TEST, ENTER
Wait 5 sec

BRAKES – ON (tb-ON)

SM 94 PDRS CONTROL
PL ID – ITEM 3 +2 EXEC
INIT ID – ITEM 24 +2 EXEC

Expected OBSS HANDOFF posn:

	X	Y	Z	PITCH	YAW	ROLL	PL ID	
√	-1030	+227	-614	284	270	270	2	*
	SY	SP	EP	WP	WY	WR		
√	+26.1	+66.3	-49.2	-86.0	+10.7	-100.7		

*Display singularity

PARAM – PORT TEMP
JOINT – CRIT TEMP

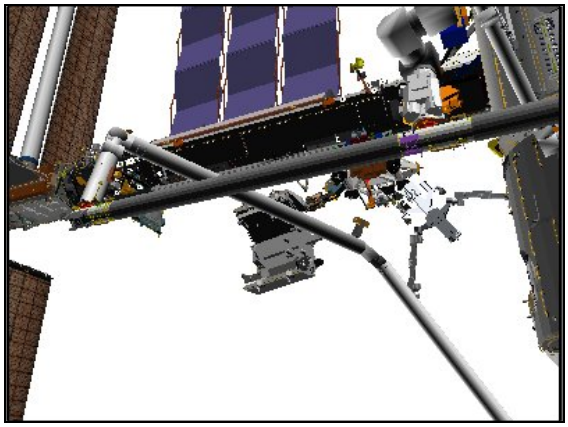

CCTV B (-25,25)

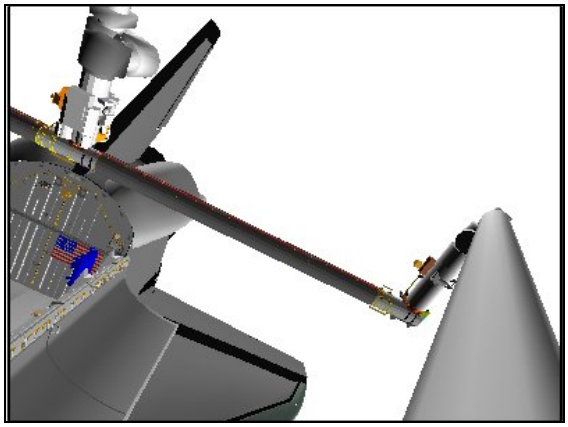

ELBOW (-30,-5)

Perform ACTIVATION (LDRI/ITVC Cue Card, P/TV)
Perform LCH ACTIVATION (LCS Cue Card, P/TV)

Give SSRMS Operator GO for OBSS Ungrapple

Perform LCC ACTIVATION (LCS Cue Card, P/TV)
Perform LCC DEACTIVATION (LCS Cue Card, P/TV), steps 1 and 2

Review GENERIC END EFFECTOR CUE CARD – ISS/SHUTTLE DOCKED OPS

7. <u>RECONFIG PTU</u>

A7U

VID OUT DNLK MON 1 pb – push
IN PL2(VPU) pb – push

CAMR CMD PAN/TILT – HI RATE
PAN – L (to hard stop)
TILT – UP (to hard stop)
PAN/TILT – RESET, HI RATE (LO within 10°)
PAN: +75 (right)
TILT: -55 (dn)

VIDEO OUT MUX 1 L pb – push (MIDDECK lt on)
LDRI MODE 2 pb – push (ITVC video)

OBSS HANDOFF FROM SRMS TO SSRMS FOR STOW

1. SETUP

DNLK MON 1	SRMS Elbow
DTV MON 2	B
MON 1 (V10/L)	P1 LOOB

SM 94 PDRS CONTROL

√PL ID, ITEM 3: 2

√INIT ID, ITEM 24: 2

Verify at OBSS HANDOFF TO STOW posn:

X	Y	Z	PITCH	YAW	ROLL	PL ID
-65	+200	-762	95	312	197	2
SY	SP	EP	WP	WY	WR	
+164.6	+6.1	-19.3	+24.0	+7.1	+86.4	

SSRMS will maneuver to grapple OBSS

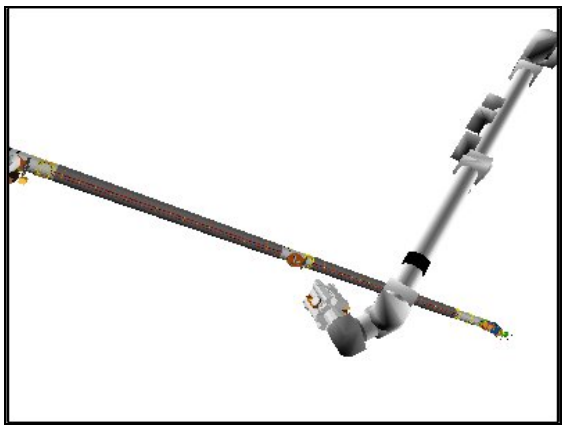

SRMS ELBOW (40,-10)

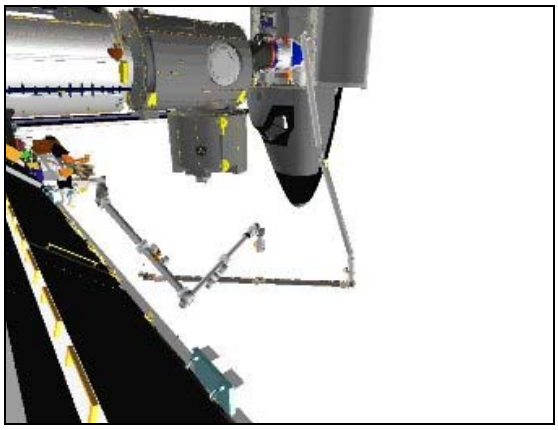

P1 LOOB (130,-20)

2. STOW PTU

R12 (VPU) √Green Jumper – LDRI/ITVC

A7U VID DNLK MON 1 pb – push
IN PL2(VPU) pb – push

CAMR CMD PAN/TILT – HI RATE
PAN – L (to hard stop)
TILT – UP (to hard stop)
PAN/TILT – RESET
PAN: +108 (right)
TILT: -175 (down)

R12 (VPU) Green Jumper – ISS

On SSRMS Operator GO for OBSS Ungrapple,

CAUTION
UMBILICAL RMS HTR power must be applied within 90 min to prevent sensor package damage

Perform LCC DEACTIVATION (LCS Cue Card, P/TV)
Perform LCH DEACTIVATION (LCS Cue Card, P/TV)
Perform DEACTIVATION (LDRI/ITVC Cue Card, P/TV)

3. OBSS UNGRAPPLE

A7U CCTV – config for ungrapple
– RMS WRIST, ZOOM: 34.0 HFOV
FOCUS: 5 ft

NOTE
CONTR ERR lt and 'S96 PDRS CNTL' msg may occur due to Consistency/Envelope Check error

RHC RATE – COARSE (RATE MIN tb-OFF)

SM 94 PDRS CONTROL
AUTO BRAKE INH – ITEM 10 EXEC (*)

BRAKES – OFF (tb-OFF)
MODE – TEST, ENTER
Wait 5 sec

BRAKES – ON (tb-ON)

SM 94 PDRS CONTROL
AUTO BRAKE ENA – ITEM 9 EXEC (*)
PL ID – ITEM 3 +0 EXEC
INIT ID – ITEM 24 +0 EXEC

RHC RATE – VERN (RATE MIN tb-ON)
BRAKES – OFF (tb-OFF)
MODE – END EFF, ENTER

CAUTION
Monitor EE tb timing to prevent EE motor burnout

EE MODE – AUTO
RELEASE sw – depress (mom)

When OPEN tb – gray, mnvr arm clear of grapple pin

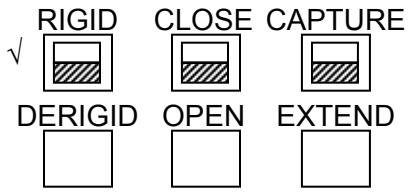

CRITICAL TIMES (28 sec total):
DERIGID tb – gray, 5 sec max, then
OPEN tb – gray, 3 sec max, then
EXTEND tb – gray, 20 sec max

Mnvr to OBSS HANDOFF TO STOW UNGRAPPLE posn:

X	Y	Z	PITCH	YAW	ROLL	PL ID
-163	-232	-364	173	11	230	0
SY	SP	EP	WP	WY	WR	
+163.6	+25.3	-59.1	+44.7	+8.0	+86.2	

EE MODE – OFF

```
* If manual release reqd:                                          *
*     EE MODE          – MAN                                       *
*         MAN CONTR – DERIGID (hold until DERIGID tb-gray, 5 sec max) *
*         RELEASE sw – depress (hold until OPEN tb-gray, 3 sec max)   *
* Mnvr arm clear of grapple pin, then                               *
*     EE MAN CONTR – DERIGID (hold until EXTEND tb-gray, 20 sec max) *
*         MODE          – OFF                                       *
```

BRAKES – ON (tb-ON)

PARAM – PORT TEMP
JOINT – CRIT TEMP

Give SSRMS Operator GO to maneuver to Intermediate posn

4. <u>MNVR PRE-CRADLE</u>
Verify SSRMS is at OBSS STOW BACKOFF posn:

SR	SY	SP	EP	WP	WY	WR
+236.5	0.0	-38.3	-121.9	-43.8	-14.3	-34.1

DNLK MON 1	B (C)
DTV MON 2	A (Elbow)

RHC

RATE – as reqd (VERN within 10 ft)
BRAKES – OFF (tb-OFF)
MODE – SINGLE, ENTER

Mnvr to PRE-CRADLE posn:

	SY	SP	EP	WP	WY	WR	
OBSS Handoff to Stow Pre-Grapple	+163.6	+25.3	-59.1	+44.7	+8.0	+86.2	
1: SY –	+90.0						
2: SP –		+25.0					
3: EP +			-25.0				
4: WP –				+5.0			
5: WY –					0.0		
6: WR –						0.0	
7: SY –	0.0						
Pre-Cradle	0.0	+25.0	-25.0	+5.0	0.0	0.0	
	X	Y	Z	PITCH	YAW	ROLL	PL ID
	-1261	-146	-551	5	2	0	0

BRAKES – ON (tb-ON)

PARAM – PORT TEMP
JOINT – CRIT TEMP

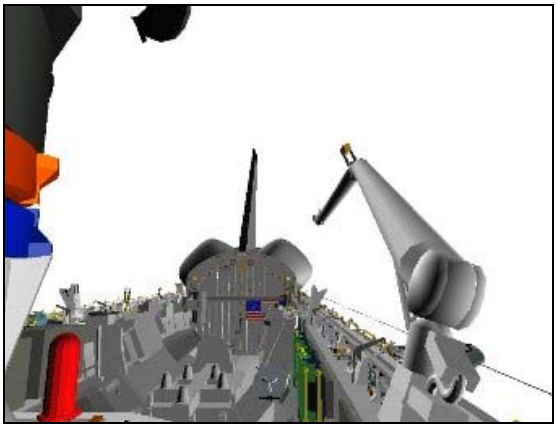

CCTV A (0,10)

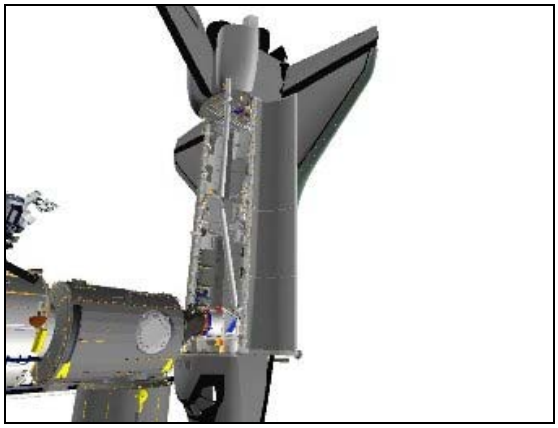

P1 LOOB (140,20)

5. <u>CONFIGURE POWER</u>

MA73C:C cb MCA PWR AC3 3Φ MID 2 – op
√AC2 3Φ MID 2 – op
MA73C:D √AC3 3Φ MID 4 – op

R13L PL BAY MECH PWR SYS (two) – ON

6. <u>STBD MRL LATCH</u>

SM 94 PDRS CONTROL
RMS STBD – ITEM 2 EXEC (*)
√STBD AFT, MID, FWD REL (six) = 0

<u>NOTE</u>
Expect single motor drive time for MRL latch

STBD RMS RETEN LAT – LAT (tb-LAT) (18 sec max)
– OFF

If motor drive time > 18 sec, √MCC

SM 94 PDRS CONTROL
√STBD AFT, MID, FWD LAT (six) = 1

7. <u>RECONFIGURE POWER</u>

R13L PL BAY MECH PWR SYS (two) – OFF

MA73C:C cb MCA PWR AC3 3Φ MID 2 – cl
√AC2 3Φ MID 2 – op
MA73C:D √AC3 3Φ MID 4 – op

SM 94 PDRS CONTROL
RMS PORT – ITEM 1 EXEC (*)

SJ OBSS HANDOFF FROM SSRMS TO SRMS

1. SETUP
   Perform OBSS HANDOFF FROM SSRMS TO SRMS, steps 1-5

2. SJ MNVR TO OBSS GRAPPLE
   On SSRMS Operator GO for SRMS OBSS Grapple and SSRMS at OBSS HANDOFF:

SR	SY	SP	EP	WP	WY	WR
-81.5	+181.7	+134.9	+114.4	+7.9	-5.9	+77.0

DNLK MON 1	B
DV MON 2	EE
MON 1 (V10/L)	A
MON 2 (V10/R)	P1 LOOB

* If using Shuttle attitude control, verify in attitude; *
* then DAP: FREE *

RATE – VERN (RATE MIN tb-ON)
BRAKES – OFF (tb-OFF)
MODE – best available

Drive joints per OBSS SJ GRAPPLE AT HANDOFF – WRIST CCTV OVERLAY and diagram until EE within grapple envelope

OBSS GRAPPLE AT HANDOFF

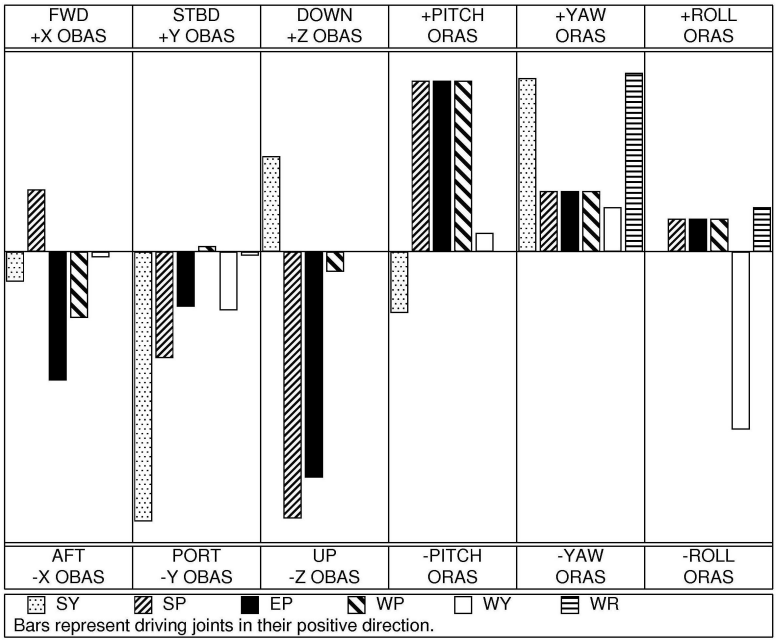

To get:	Drive:
+X (fwd)	-EP, -WP
+Y (stbd)	-SY, -SP
+Z (down)	-SP, -EP

To get:	Drive:
+PITCH	+WP, +EP
+YAW	+WR, +SY
+ROLL	-WY

Driving:	Results In:
+SY	-Y (port), +YAW
+SP	-Z (up), +PITCH
+EP	-Z (up), +PITCH

Driving:	Results In:
+WP	-X (aft), +PITCH
+WY	-Y (port), -ROLL
+WR	+YAW

ΔSY	ΔSP	ΔEP	ΔWP	ΔWY	ΔWR
+2.2	-3.5	-2.7	+7.0	-0.4	-2.0

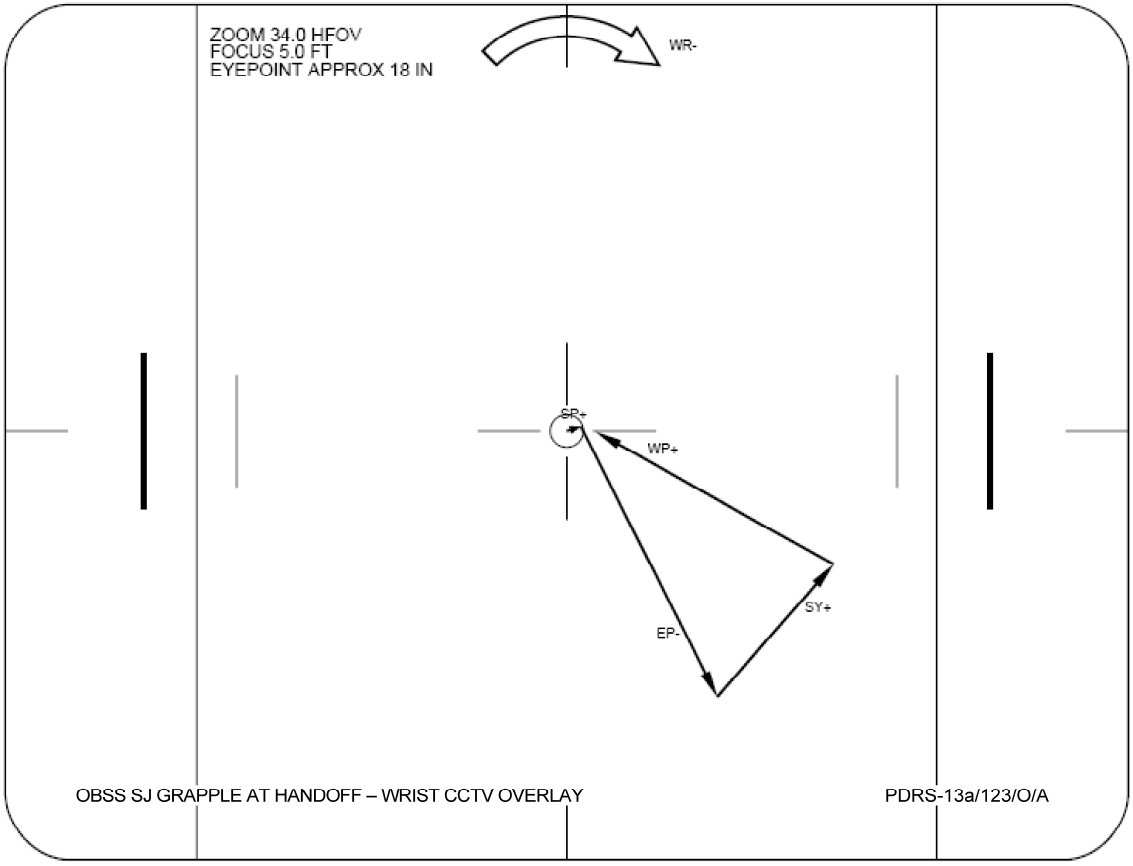

3. OBSS GRAPPLE

CAUTION
Monitor EE tb timing to prevent EE motor burnout

EE MODE – AUTO (if available)
CAPTURE sw – depress (mom)

	RIGID	CLOSE	CAPTURE
√			
	DERIGID	OPEN	EXTEND

CRITICAL TIMES (28 sec total):
CAPTURE tb – gray, then
CLOSE tb – gray, 3 sec max, then
RIGID tb – gray, 25 sec max

```
* If manual grapple reqd:                                          *
*      EE MODE          – MAN                                      *
*          CAPTURE sw  – depress (hold until CLOSE tb-gray, 3 sec max) *
*          MAN CONTR   – RIGID (hold until RIGID tb-gray, 25 sec max)  *
```

EE MODE – OFF

If SINGLE available,
MODE – TEST, ENTER
Wait 5 sec

BRAKES – ON (tb-ON)
MODE – not DIRECT

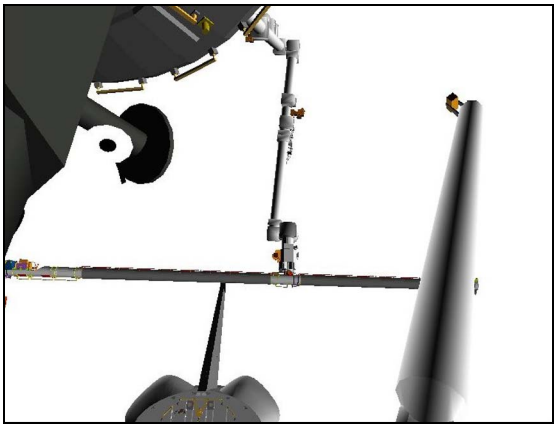

CCTV A (5,30)

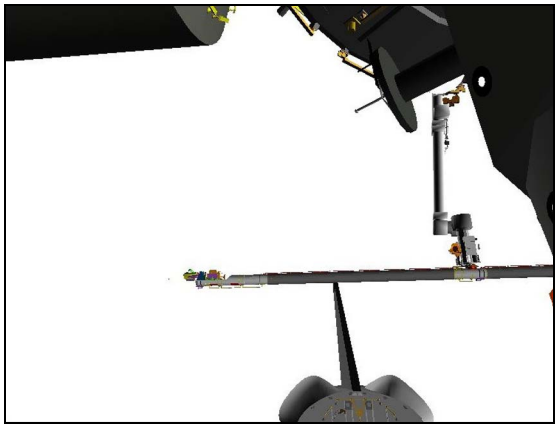

CCTV D (-5,30)

SM 94 PDRS CONTROL
PL ID – ITEM 3 +2 EXEC
INIT ID – ITEM 24 +2 EXEC

Expected OBSS HANDOFF posn:

	X	Y	Z	PITCH	YAW	ROLL	PL ID	
√	-1030	+227	-614	284	270	270	2	*
	SY	SP	EP	WP	WY	WR		
√	+26.1	+66.3	-49.2	-86.0	+10.7	-100.7		

*Display singularity

Perform ACTIVATION (LDRI/ITVC Cue Card, P/TV)
Perform LCH ACTIVATION (LCS Cue Card, P/TV)

Give SSRMS Operator GO for OBSS Ungrapple

Perform LCC ACTIVATION (LCS Cue Card, P/TV)
Perform LCC DEACTIVATION (LCS Cue Card, P/TV), steps 1 and 2

Review GENERIC END EFFECTOR CUE CARD – ISS/SHUTTLE DOCKED OPS

4. RECONFIG PTU

A7U VID OUT DNLK pb – push
IN PL2(VPU) pb – push

CAMR CMD PAN/TILT – HI RATE
PAN – L (to hard stop)
TILT – UP (to hard stop)
PAN/TILT – RESET, HI RATE (LO within 10°)
PAN: +75 (right)
TILT: -55 (dn)

VIDEO OUT MUX 1 L pb – push (MIDDECK lt on)
LDRI MODE 2 pb – push (ITVC video)

SJ OBSS HANDOFF FROM SRMS TO SSRMS FOR STOW

1. SETUP

DNLK MON 1	SRMS Elbow
DTV MON 2	B
MON 1 (V10/L)	P1 LOOB

If SINGLE MODE available:

SM 94 PDRS CONTROL

√PL ID, ITEM 3: 2

√INIT ID, ITEM 24: 2

Verify at OBSS HANDOFF TO STOW posn:

X	Y	Z	PITCH	YAW	ROLL	PL ID
-65	+200	-762	95	312	197	2
SY	SP	EP	WP	WY	WR	
+164.6	+6.1	-19.3	+24.0	+7.1	+86.4	

SSRMS will maneuver to grapple OBSS

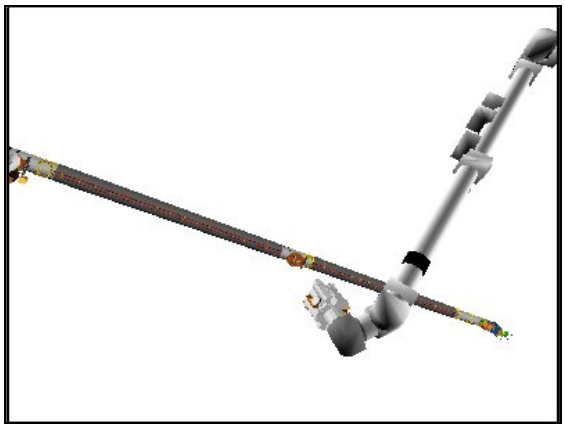

SRMS ELBOW (40,-10)

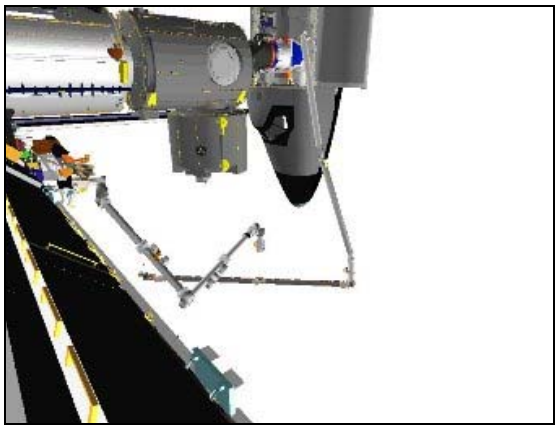

P1 LOOB (130,-20)

2. STOW PTU

R12 (VPU) √Green Jumper – LDRI/ITVC

A7U VID DNLK pb – push
IN PL2(VPU) pb – push

CAMR CMD PAN/TILT – HI RATE
PAN – L (to hard stop)
TILT – UP (to hard stop)
PAN/TILT – RESET
PAN: +108 (right)
TILT: -175 (down)

R12 (VPU) Green Jumper – ISS

On SSRMS Operator GO for OBSS Ungrapple,

CAUTION
UMBILICAL RMS HTR power must be applied within 90 min to prevent sensor package damage

Perform LCC DEACTIVATION (LCS Cue Card, P/TV)
Perform LCH DEACTIVATION (LCS Cue Card, P/TV)
Perform DEACTIVATION (LDRI/ITVC Cue Card, P/TV)

3. UNGRAPPLE

If SINGLE MODE available:

RHC RATE – COARSE (RATE MIN tb-OFF)

SM 94 PDRS CONTROL

AUTO BRAKE INH – ITEM 10 EXEC (*)

BRAKES – OFF (tb-OFF)
MODE – TEST, ENTER
Wait 5 sec

BRAKES – ON (tb-ON)

SM 94 PDRS CONTROL

AUTO BRAKE ENA – ITEM 9 EXEC (*)
PL ID – ITEM 3 +0 EXEC
INIT ID – ITEM 24 +0 EXEC

RATE – as reqd (VERN within 10 ft)
BRAKES – OFF (tb-OFF)

MODE – best available

CAUTION
Monitor EE tb timing to prevent EE motor burnout

EE MODE – MAN
MAN CONTR – DERIGID (hold until DERIGID tb-gray, 5 sec max)
RELEASE sw – depress (hold until OPEN tb-gray, 3 sec max)

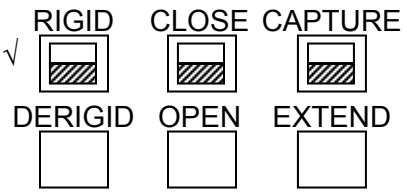

CRITICAL TIMES (8 sec total):
DERIGID tb – gray, 5 sec max, then
OPEN tb – gray, 3 sec max, then

4. MNVR ARM CLEAR OF OBSS
   Drive joints per OBSS SJ UNGRAPPLE AT H/O TO STOW – WRIST CCTV OVERLAY until EE clear of grapple fixture

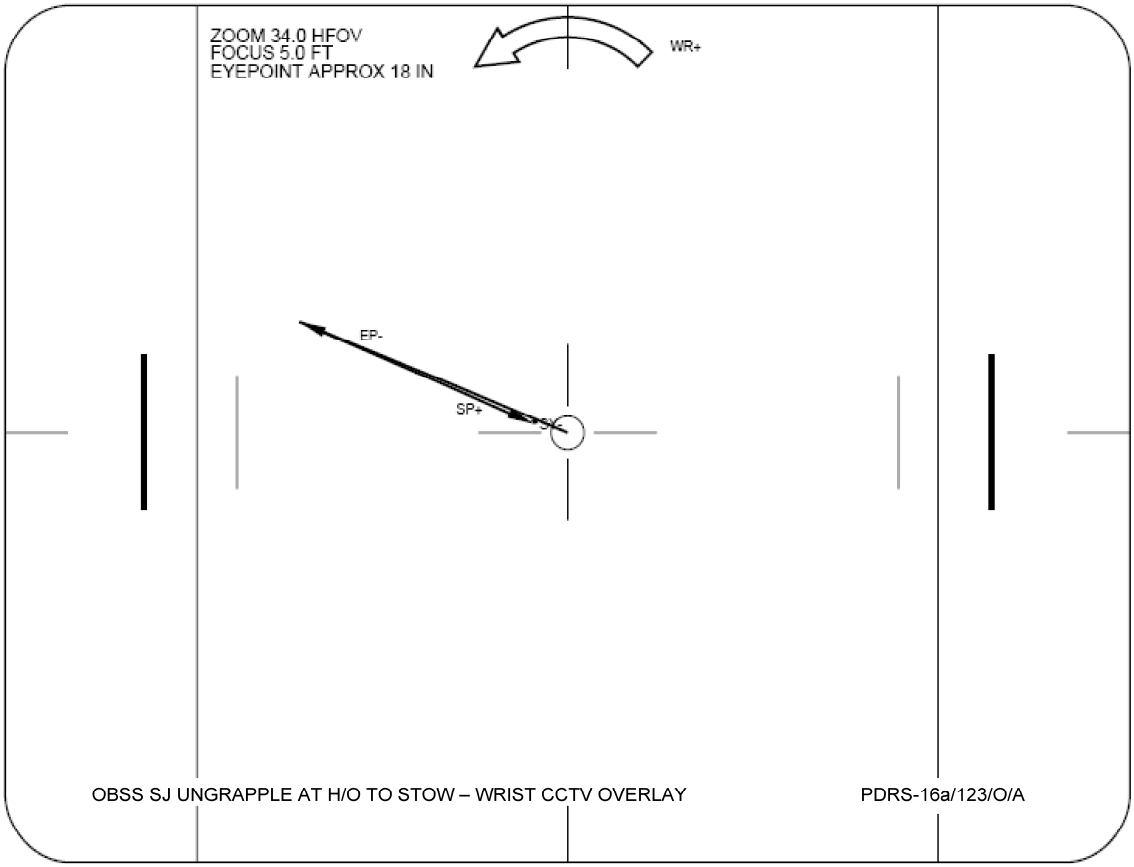

EE MAN CONTR – DERIG (hold until EXTEND tb-gray, 20 sec max)
MODE – OFF

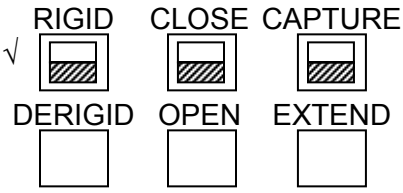

CRITICAL TIMES (20 sec total):
EXTEND tb – gray, 20 sec max

Mnvr to OBSS HANDOFF TO STOW UNGRAPPLE posn:

SY	SP	EP	WP	WY	WR	
+163.6	+25.3	-59.1	+44.7	+8.0	+86.2	
X	Y	Z	PITCH	YAW	ROLL	PL ID
-163	-232	-364	173	11	230	0

If SINGLE MODE available:
BRAKES – ON (tb-ON)
MODE – not DIRECT

Give SSRMS Operator GO to maneuver to Intermediate posn

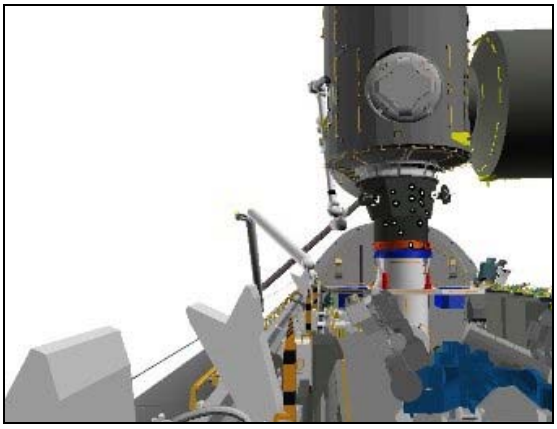

CCTV B (-5,5)

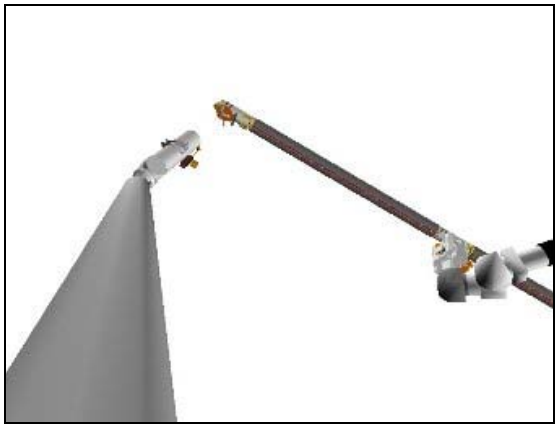

SRMS ELBOW (20,-10)

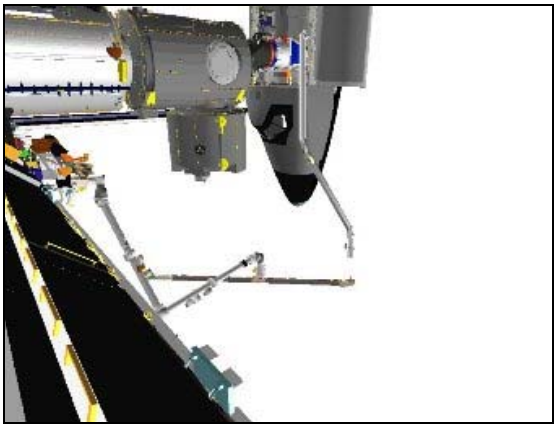

P1 LOOB (130,-20)

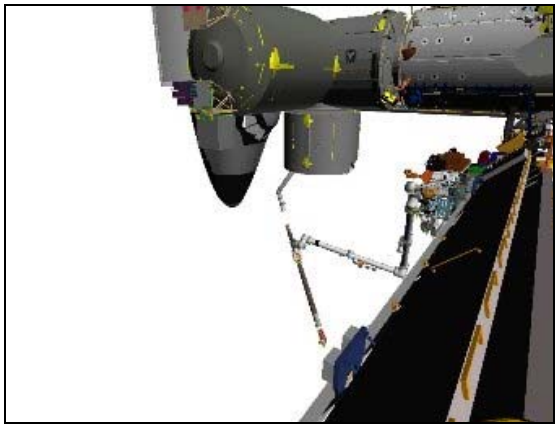

S1 LOOB (55,-20)

5. <u>MNVR PRE-CRADLE</u>
   Verify SSRMS at OBSS STOW BACKOFF posn:

SR	SY	SP	EP	WP	WY	WR
+236.5	0.0	-38.3	-121.9	-43.8	-14.3	-34.1

DNLK MON 1	B (C)
DTV MON 2	A (Elbow)

If SINGLE MODE available:
RATE – as reqd (VERN within 10 ft)
BRAKES – OFF (tb-OFF)

Mnvr to PRE-CRADLE posn:

	SY	SP	EP	WP	WY	WR
OBSS Handoff to Stow Pre-Grapple	+163.6	+25.3	-59.1	+44.7	+8.0	+86.2
1: SY –	+90.0					
2: SP –		+25.0				
3: EP +			-25.0			
4: WP –				+5.0		
5: WY –					0.0	
6: WR –						0.0
7: SY –	0.0					
Pre-Cradle	0.0	+25.0	-25.0	+5.0	0.0	0.0

X	Y	Z	PITCH	YAW	ROLL	PL ID
-1261	-146	-551	5	2	0	0

If SINGLE MODE available:
BRAKES – ON (tb-ON)
MODE – not DIRECT

PARAM – PORT TEMP
JOINT – CRIT TEMP

6. <u>STBD MRL LATCH</u>
Perform steps 5 thru 7 of OBSS HANDOFF FROM SRMS TO SSRMS FOR STOW

Step 1:
Drive SY- (for 73.6°)
From +163.6 to +90.0

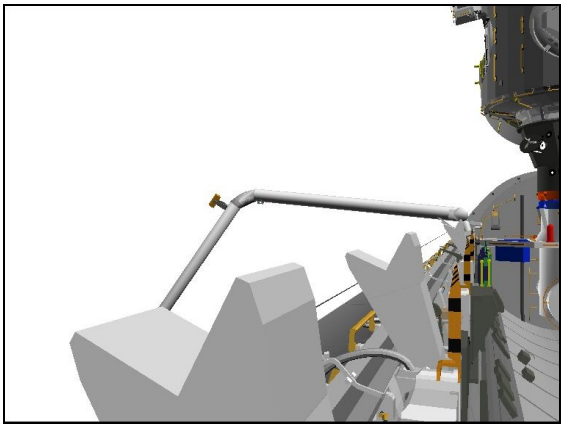

CCTV B (-20,0)

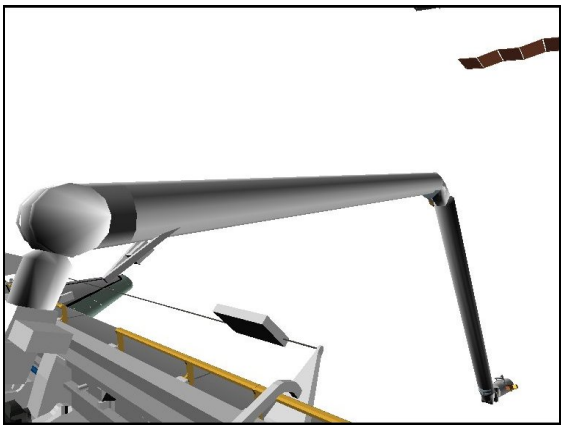

CCTV A (50,0)

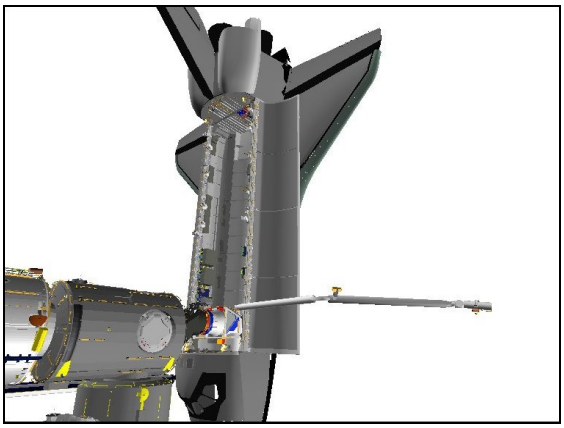

P1 LOOB (140,20)

Step 2:
Drive SP- (for 0.3°)
From +25.3 to +25.0

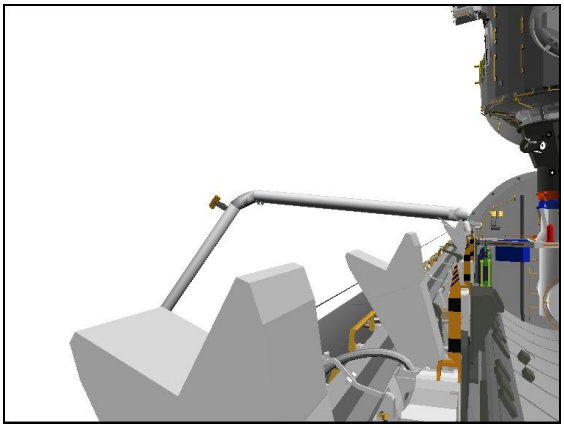

CCTV B (-20,0)

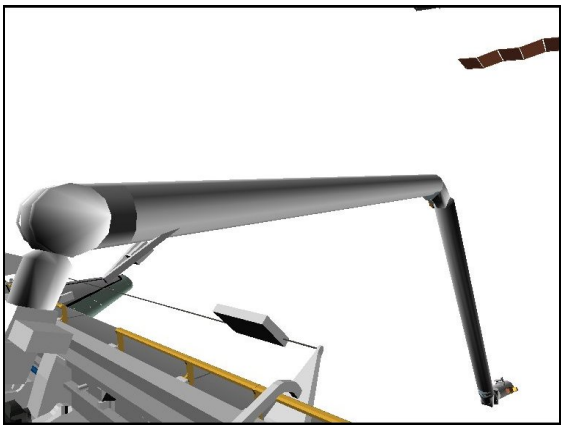

CCTV A (50,0)

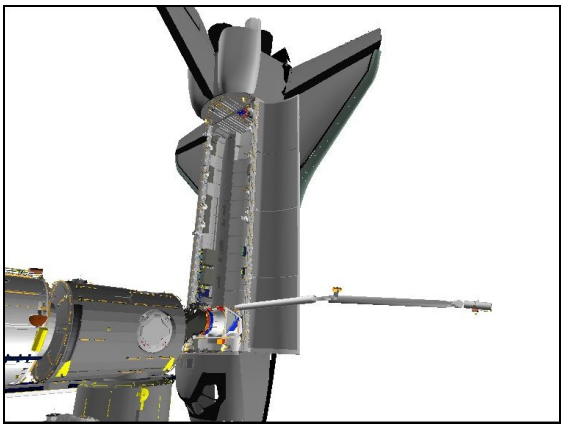

P1 LOOB (140,20)

Step 3:
Drive EP+ (for 34.1°)
From -59.1 to -25.0

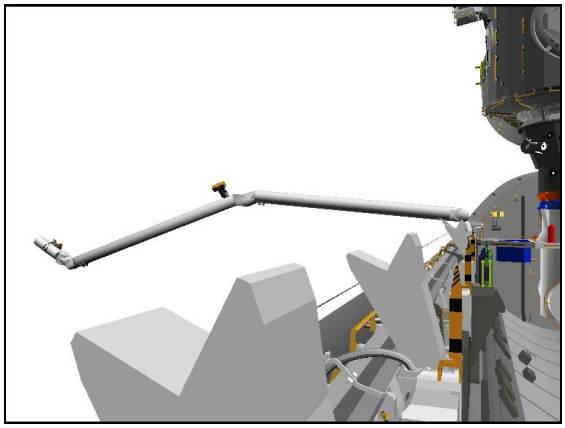

CCTV B (-20,0)

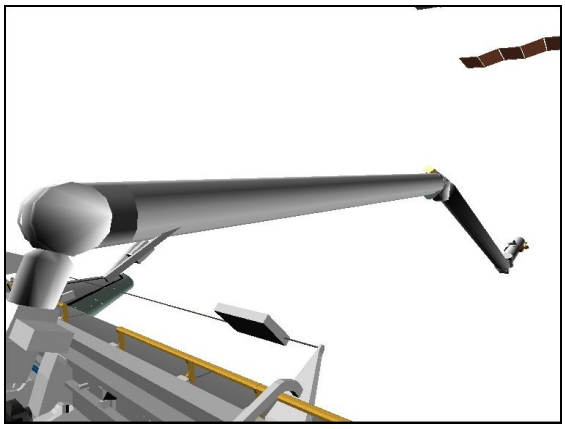

CCTV A (50,0)

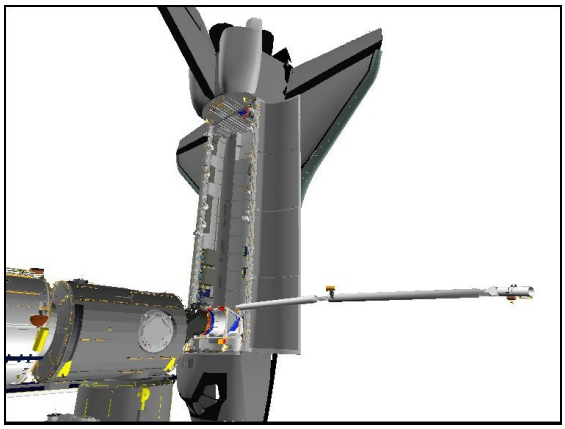

P1 LOOB (140,20)

Step 4:
Drive WP- (for 39.7°)
From +44.7 to +5.0

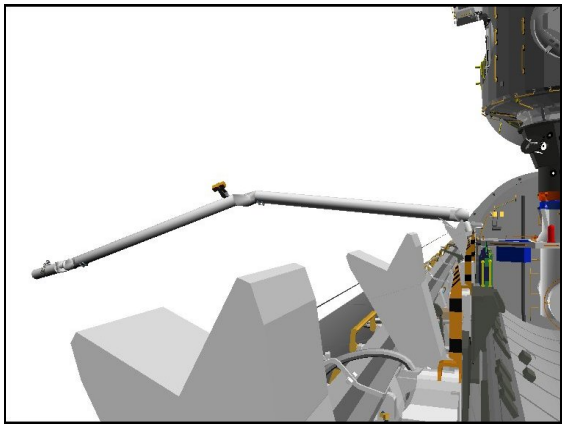

CCTV B (-20,0)

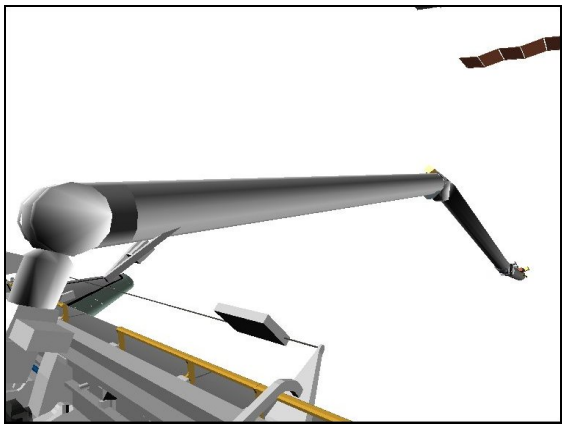

CCTV A (50,0)

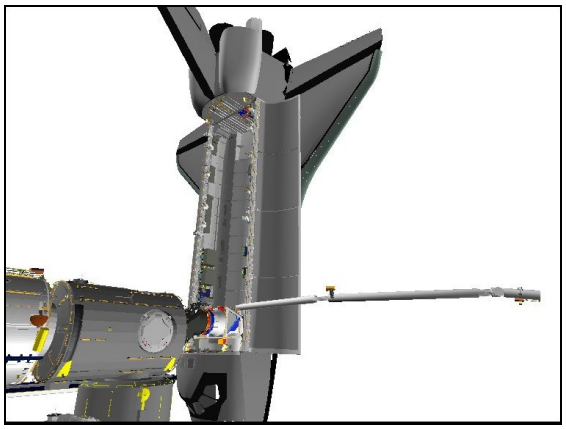

P1 LOOB (140,20)

Step 5:
Drive WY- (for 8.0°)
From +8.0 to +0.0

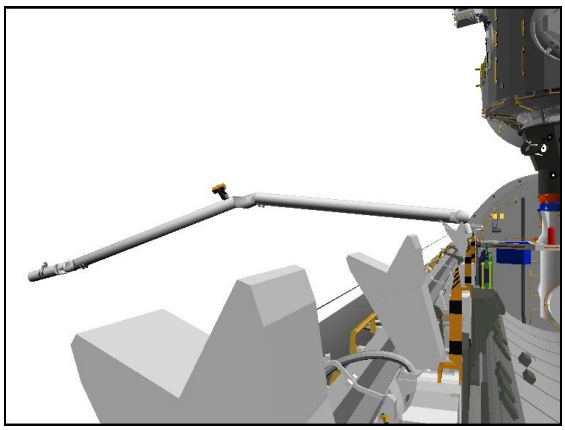

CCTV B (-20,0)

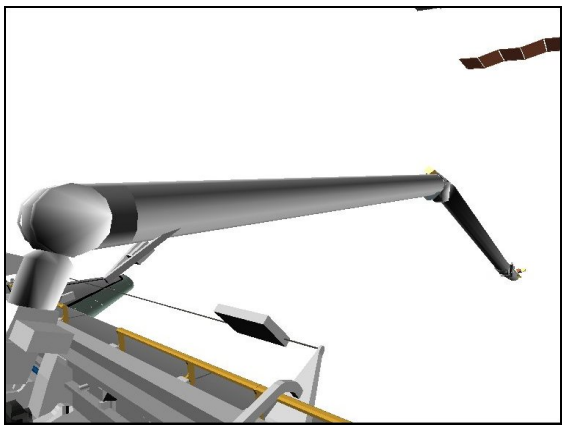

CCTV A (50,0)

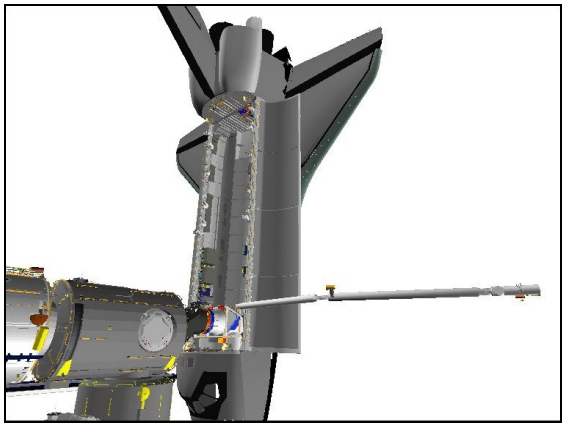

P1 LOOB (140,20)

Step 6:
Drive WR- (for 86.2°)
From +86.2 to +0.0

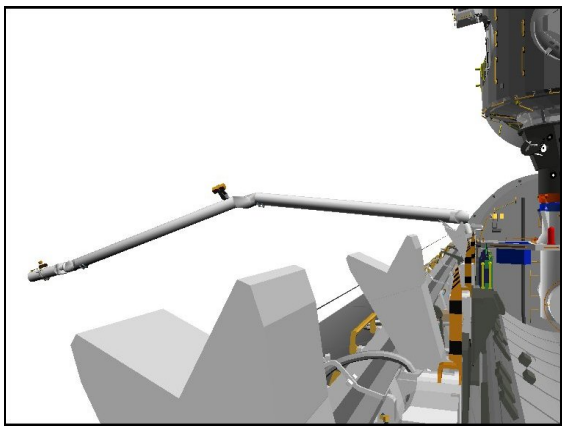

CCTV B (-20,0)

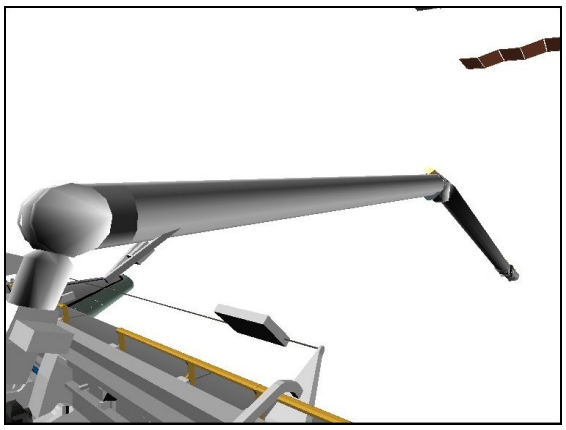

CCTV A (50,0)

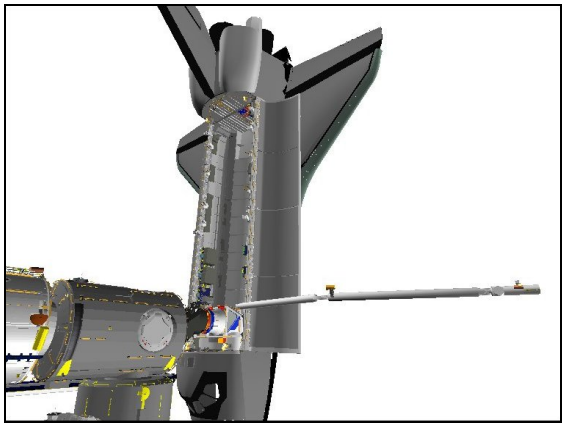

P1 LOOB (140,20)

Step 7:

Drive SY- (for 90.0°)

From +90.0° to +0.0°

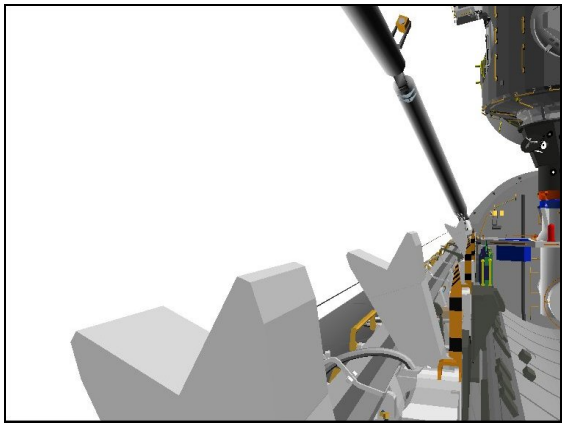

CCTV B (-20,0)

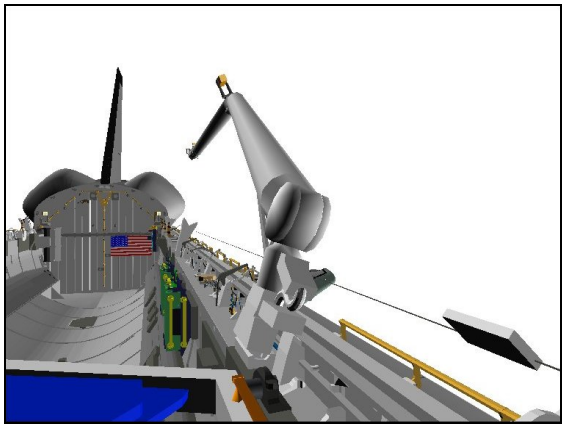

CCTV A (20,0)

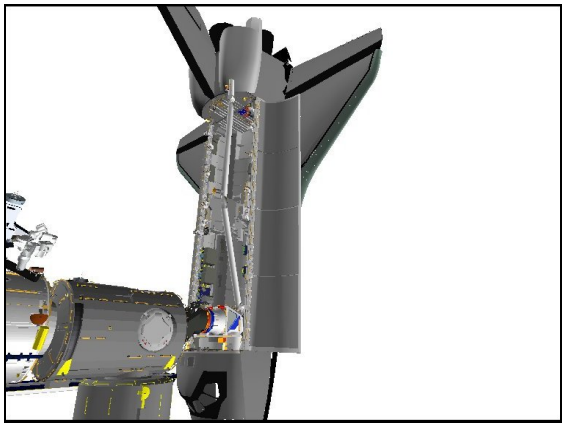

P1 LOOB (140,20)

1. SETUP

NOTE
SSRMS may be at MT Translate Stow position at worksite 4 or 6, or OBSS Pre-Grapple at Handoff. All other SSRMS positions must be verified prior to execution

MON 1	B
MON 2	A
DNLK MON 1	P1 LOOB

SM 94 PDRS CONTROL
√PL ID, ITEM 3: 2
√INIT ID, ITEM 24: 2

Verify at OBSS HANDOFF TO STOW posn:

X	Y	Z	PITCH	YAW	ROLL	PL ID
-64	+199	-761	96	312	197	2
SY	SP	EP	WP	WY	WR	
+164.6	+6.1	-19.3	+24.0	+7.1	+86.4	

2. MNVR TO INTERMEDIATE POSN
RATE – as reqd (VERN within 10 ft)
BRAKES – OFF (tb-OFF)
MODE – SINGLE, ENTER

Mnvr to INTERMEDIATE posn:

	SY	SP	EP	WP	WY	WR	
OBSS H/O to Stow	+164.6	+6.1	-19.3	+24.0	+7.1	+86.4	
1: SY –	+90.0						
2: WR –						0.0	
Intermediate	+90.0	+6.1	-19.3	+24.0	+7.1	0.0	
	X	Y	Z	PITCH	YAW	ROLL	PL ID
	-872	-772	-770	70	11	266	2

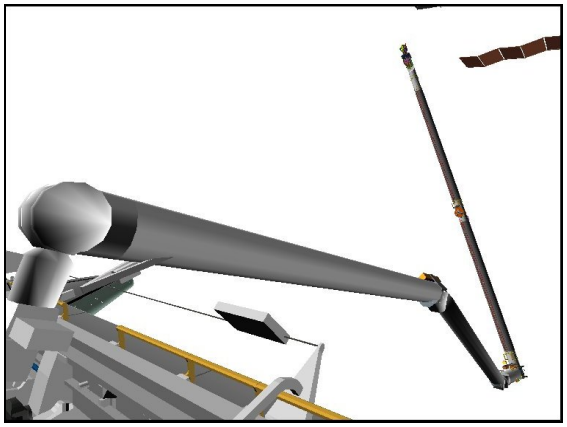

CCTV A (50,0)

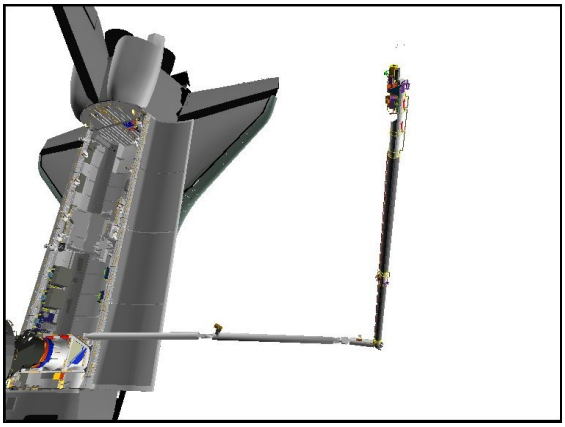

P1 LOOB (160,25)

3. MNVR TO UNDOCK POSN

SM 94 PDRS CONTROL

END POS – ITEM 18 -1 0 3 0 +2 2 7 -6 1 4 EXEC
ATT – ITEM 21 +2 8 4 +2 7 0 +2 7 0 EXEC
CMD CK – ITEM 25 EXEC (GOOD)

RHC RATE – COARSE (RATE MIN tb-OFF)

MODE – OPR CMD, ENTER (READY lt on)

After PROCEED, if motion no longer apparent but POR within 1 in/1 deg and IN PROG lt – on:
AUTO SEQ – STOP

AUTO SEQ – PROCEED (IN PROG lt on)

When AUTO SEQ IN PROG lt – off:
BRAKES – ON (tb-ON)

UNDOCK posn:

	X	Y	Z	PITCH	YAW	ROLL	PL ID
√	-1030	+227	-614	284	270	270	2
	SY	SP	EP	WP	WY	WR	
√	+26.1	+66.3	-49.2	-86.0	+10.7	-100.7	

PARAM – PORT TEMP
JOINT – CRIT TEMP

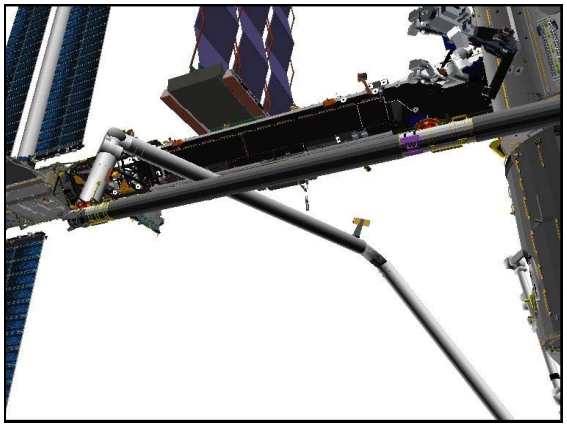

CCTV B (-25,25)

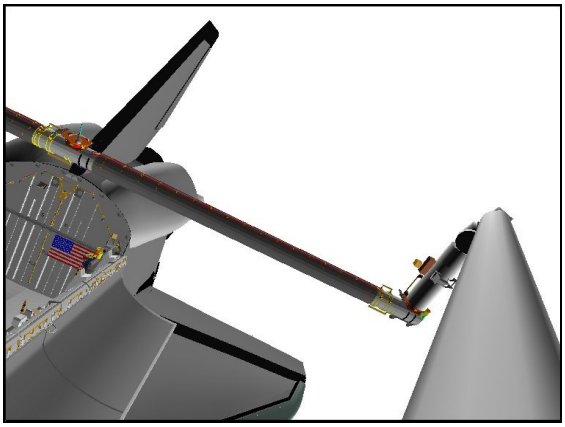

ELBOW (-30,-5)

CONTINGENCY OBSS REGRAPPLE AT H/O TO STOW

1. SETUP FOR GRAPPLE

A7U CCTV – config for grapple
– install PDRS TARGET OVERLAY FOR CTVM
– RMS WRIST, ZOOM: 34.0 HFOV
FOCUS: 5 ft
Maintain eyepoint approx 18 in when using grapple overlay

DNLK MON 1	B
DTV MON 2	EE
MON 1 (V10/L)	P1 LOOB

R12(OBSS) √SPEE PWR – OFF
A15 √APCU 1,2 OUTPUT (two) – OFF

SM 94 PDRS CONTROL
√PL ID, ITEM 3: 0
√INIT ID, ITEM 24: 0

Verify at OBSS HANDOFF TO STOW UNGRAPPLE posn:

X	Y	Z	PITCH	YAW	ROLL	PL ID
-163	-232	-364	173	11	230	0
SY	SP	EP	WP	WY	WR	
+163.6	+25.3	-59.1	+44.7	+8.0	+86.2	

2. OBSS GRAPPLE AT HANDOFF TO STOW POSN

On SSRMS Operator GO for SRMS OBSS Grapple,
RHC RATE – VERN (RATE MIN tb-ON)
BRAKES – OFF (tb-OFF)
MODE – END EFF, ENTER

Mnvr to grapple envelope

CAUTION
Monitor EE tb timing to prevent EE motor burnout

EE MODE – AUTO
CAPTURE sw – depress (mom)

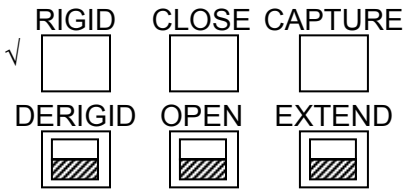

CRITICAL TIMES (28 sec total):
CAPTURE tb – gray, then
CLOSE tb – gray, 3 sec max, then
RIGID tb – gray, 25 sec max

EE MODE – OFF

MODE – TEST, ENTER
Wait 5 sec

BRAKES – ON (tb-ON)

SM 94 PDRS CONTROL

PL ID – ITEM 3 +2 EXEC
INIT ID – ITEM 24 +2 EXEC

Expected OBSS HANDOFF TO STOW posn:

	X	Y	Z	PITCH	YAW	ROLL	PL ID
√	-64	+199	-761	96	312	197	2
	SY	SP	EP	WP	WY	WR	
√	+164.6	+6.1	-19.3	+24.0	+7.1	+86.4	

PARAM – PORT TEMP
JOINT – CRIT TEMP

SRMS ELBOW (30,-10)

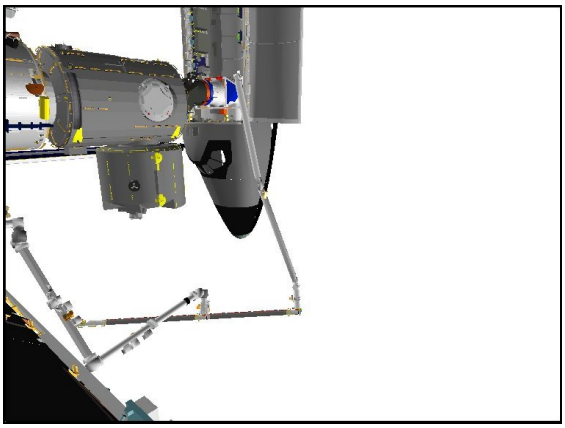

P1 LOOB (140,-15)

Perform ACTIVATION (LDRI/ITVC Cue Card, P/TV)
Perform LCH ACTIVATION (LCS Cue Card, P/TV)

Give SSRMS Operator GO for OBSS Ungrapple

Perform LCC ACTIVATION (LCS Cue Card, P/TV)
Perform LCC DEACTIVATION (LCS Cue Card, P/TV), steps 1 and 2

Review GENERIC END EFFECTOR CUE CARD – ISS/SHUTTLE DOCKED OPS

3. RECONFIG PTU

A7U VID OUT DNLK MON 1 pb – push
IN PL2(VPU) pb – push

CAMR CMD PAN/TILT – HI RATE
PAN – L (to hard stop)
TILT – UP (to hard stop)
PAN/TILT – RESET, HI RATE (LO within 10°)

VIDEO OUT MUX 1 L pb – push (MIDDECK lt on)
LDRI MODE 2 pb – push (ITVC video)

VIEWING SUPPORT

SLP VIEWING..... FS 4-2
-Y STAR TRACKER CLEAR..... FS 4-4
SLP VIEWING WITH OBSS ..... FS 4-6
MNVR FROM SLP VIEWING WITH OBSS TO -Y TRACKER CLEAR ..... FS 4-8
-Y TRACKER CLEAR OR SLP VIEWING WITH OBSS TO UNDOCK ... FS 4-10

1. SETUP

Verify SSRMS is at 1JA DOCK posn:

SR	SY	SP	EP	WP	WY	WR
-84.8	+96.0	+56.0	-126.0	-128.0	+41.0	-110.0

DNLK MON 1	A
DTV MON 2	B

SM 94 PDRS CONTROL

√PL ID, ITEM 3: 0

√INIT ID, ITEM 24: 0

Verify at PRE-CRADLE posn:

X	Y	Z	PITCH	YAW	ROLL	PL ID
-1261	-146	-551	5	2	0	0
SY	SP	EP	WP	WY	WR	
0.0	+25.0	-25.0	+5.0	0.0	0.0	

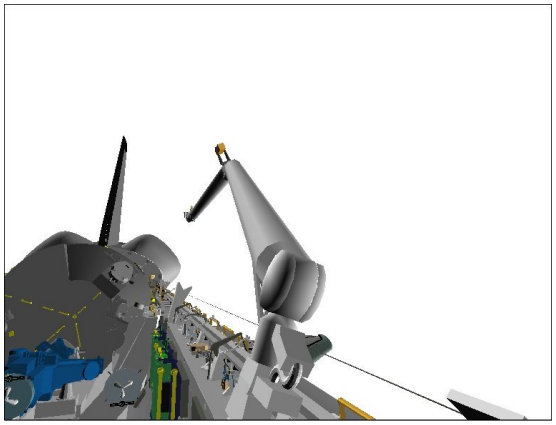

CCTV A (20,10)

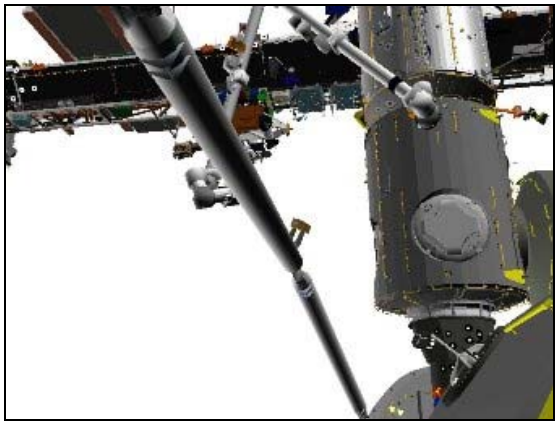

CCTV B (-10,20)

2. MNVR TO SLP VIEWING

RHC

RATE – as reqd (VERN within 10 ft)

BRAKES – OFF (tb-OFF)

MODE – SINGLE, ENTER

Mnvr to OCAS Start posn:

	SY	SP	EP	WP	WY	WR	
Pre-Cradle	0.0	+25.0	-25.0	+5.0	0.0	0.0	
1: SY +	+65.0						
OCAS Start	+65.0	+25.0	-25.0	+5.0	0.0	0.0	
	X	Y	Z	PITCH	YAW	ROLL	PL ID
	-925	-643	-376	333	62	13	0

SM 94 PDRS CONTROL

END POS – ITEM 18 -4 1 6 -5 9 1 -4 7 9 EXEC

ATT – ITEM 21 +9 +7 1 +2 5 6 EXEC

CMD CK – ITEM 25 EXEC (GOOD)

VIEWING SUPPORT

MODE – OPR CMD, ENTER (READY lt on)
AUTO SEQ – PROCEED (IN PROG lt on)

When AUTO SEQ IN PROG lt – off:
BRAKES – ON (tb-ON)
PARAM – PORT TEMP
JOINT – CRIT TEMP

SLP VIEWING posn:

	X	Y	Z	PITCH	YAW	ROLL	PL ID
√	-416	-591	-479	9	71	256	0
	SY	SP	EP	WP	WY	WR	
√	+125.4	+41.6	-42.6	+35.2	-50.0	-55.6	

CCTV A (80,0)

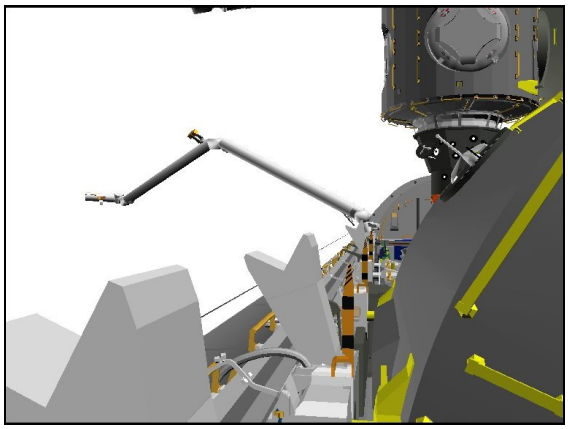

CCTV B (-10,0)

-Y STAR TRACKER CLEAR

1. SETUP

Verify SSRMS at FI CLEAR posn:

SR	SY	SP	EP	WP	WY	WR
-81.5	+90.0	+117.4	+60.0	+19.5	-6.3	+78.8

DNLK MON 1	A
DTV MON 2	C (B)

SM 94 PDRS CONTROL

√PL ID, ITEM 3: 2

√INIT ID, ITEM 24: 2

Review GENERIC END EFFECTOR CUE CARD – ISS/SHUTTLE DOCKED OPS

Verify at OBSS HANDOFF posn:

X	Y	Z	PITCH	YAW	ROLL	PL ID
-1030	+227	-614	279*	270	265*	2
SY	SP	EP	WP	WY	WR	
+26.1	+66.3	-49.2	-86.0	+10.7	-100.7	

*Display singularity

CCTV A (0,20)

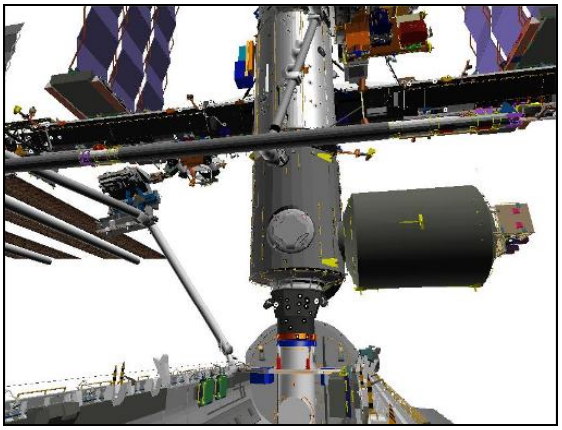

CCTV C (-10,20)

2. MNVR TO -Y STAR TRACKER CLEAR

SM 94 PDRS CONTROL

END POS – ITEM 18 -1 0 1 4 -3 6 7 -4 1 2 EXEC

ATT – ITEM 21 +6 +3 3 5 +2 7 6 EXEC

CMD CK – ITEM 25 EXEC (GOOD)

RHC RATE – COARSE (RATE MIN tb-OFF)

BRAKES – OFF (tb-OFF)

MODE – OPR CMD, ENTER (READY lt on)

AUTO SEQ – PROCEED (IN PROG lt on)

When AUTO SEQ IN PROG lt – off:

BRAKES – ON (tb-ON)

PARAM – PORT TEMP

JOINT – CRIT TEMP

-Y STAR TRACKER CLEAR posn:

	X	Y	Z	PITCH	YAW	ROLL	PL ID
√	-1014	-367	-412	6	335	276	2
	SY	SP	EP	WP	WY	WR	
√	+116.0	+30.0	-42.6	+35.2	-50.0	-55.6	

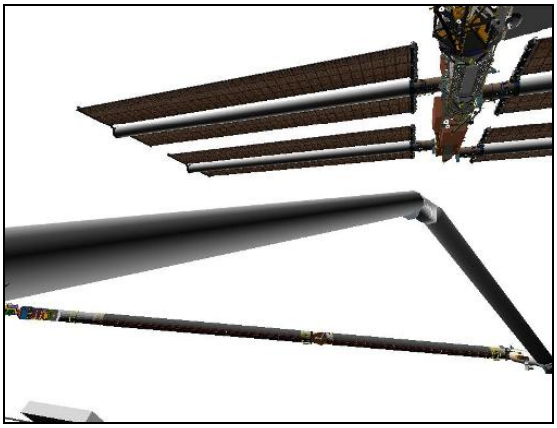

CCTV A (70,10)

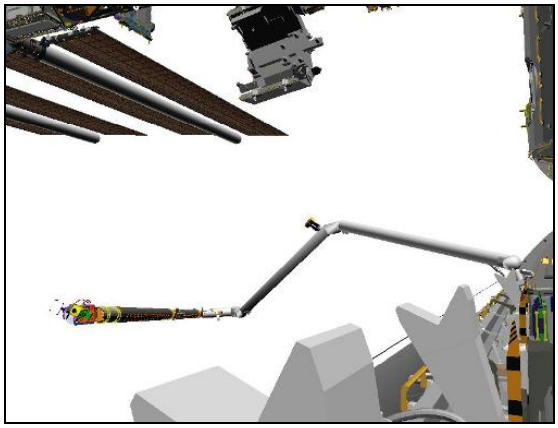

CCTV B (-25,5)

SLP VIEWING WITH OBSS

1. SETUP

Verify SSRMS at SPDM STOW posn:

SR	SY	SP	EP	WP	WY	WR
-126.4	+80.1	-53.3	+136.0	-110.6	-233.3	-94.9

DNLK MON 1	A
DTV MON 2	B

SM 94 PDRS CONTROL

√PL ID, ITEM 3: 2

√INIT ID, ITEM 24: 2

Review GENERIC END EFFECTOR CUE CARD – ISS/SHUTTLE DOCKED OPS

Verify at -Y STAR TRACKER CLEAR posn:

X	Y	Z	PITCH	YAW	ROLL	PL ID
-1014	-367	-412	6	335	276	2
SY	SP	EP	WP	WY	WR	
+116.0	+30.0	-42.6	+35.2	-50.0	-55.6	

CCTV A (70,10)

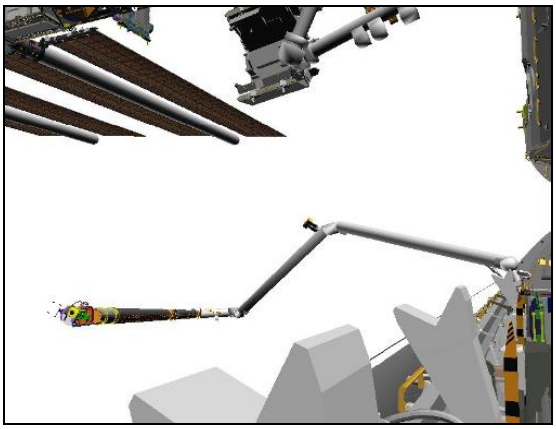

CCTV B (-25,5)

2. MNVR TO SLP VIEWING WITH OBSS

BRAKES – OFF (tb-OFF)

RHC RATE – as reqd (VERN within 10 ft)

MODE – SINGLE, ENTER

Mnvr to SLP VIEWING posn:

	SY	SP	EP	WP	WY	WR	
-Y Star Tracker Clear	+116.0	+30.0	-42.6	+35.2	-50.0	-55.6	
1: SP +		+41.6					
2: SY +	+125.4						
SLP Viewing	+125.4	+41.6	-42.6	+35.2	-50.0	-55.6	
	X	Y	Z	PITCH	YAW	ROLL	PL ID
	-975	-411	-412	353	342	265	2

BRAKES – ON (tb-ON)

PARAM – PORT TEMP

JOINT – CRIT TEMP

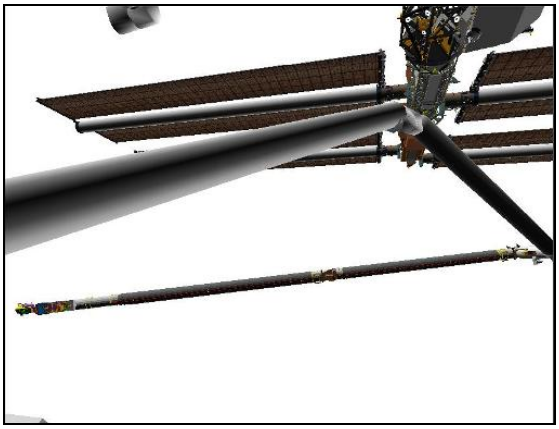

CCTV A (75,10)

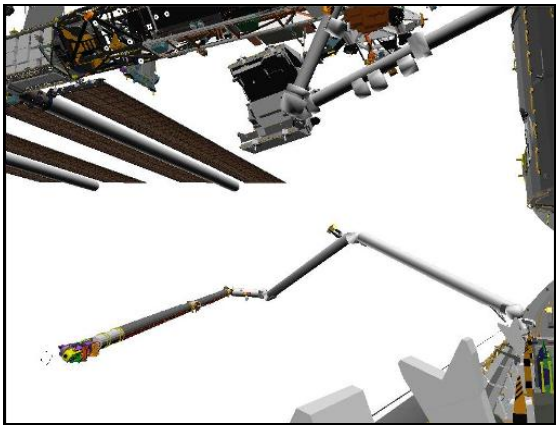

CCTV B (-25,10)

MNVR FROM SLP VIEWING WITH OBSS TO -Y TRACKER CLEAR

1. SETUP

Verify SSRMS at SPDM VIEWING posn:

SR	SY	SP	EP	WP	WY	WR
-205.0	+14.5	-100.7	-98.2	-51.0	-175.0	+175.6

DNLK MON 1	A
DTV MON 2	B

SM 94 PDRS CONTROL

√PL ID, ITEM 3: 2

√INIT ID, ITEM 24: 2

Review GENERIC END EFFECTOR CUE CARD – ISS/SHUTTLE DOCKED OPS

Verify at SLP VIEWING posn:

X	Y	Z	PITCH	YAW	ROLL	PL ID
-975	-411	-412	353	342	265	2
SY	SP	EP	WP	WY	WR	
+125.4	+41.6	-42.6	+35.2	-50.0	-55.6	

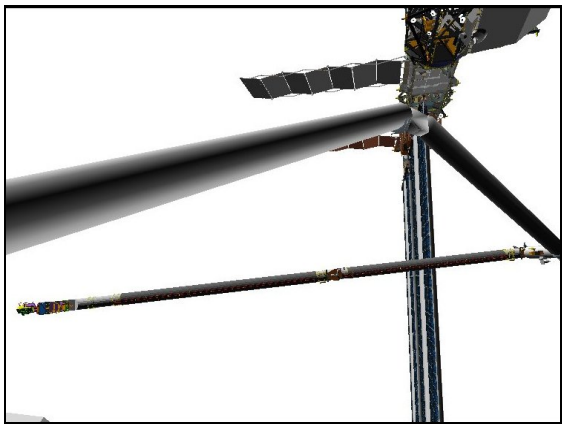

CCTV A (75,10)

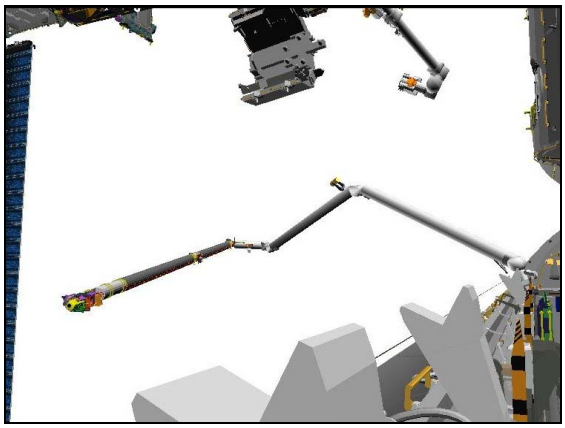

CCTV B (-25,5)

2. MNVR TO -Y STAR TRACKER CLEAR WITH OBSS

BRAKES – OFF (tb-OFF)

RHC RATE – as reqd (VERN within 10 ft)

MODE – SINGLE, ENTER

Mnvr to -Y STAR TRACKER CLEAR posn:

	SY	SP	EP	WP	WY	WR	
SLP Viewing	+125.4	+41.6	-42.6	+35.2	-50.0	-55.6	
1: SP –		+30.0					
2: SY –	+116.0						
-Y Star Tracker Clear	+116.0	+30.0	-42.6	+35.2	-50.0	-55.6	
	X	Y	Z	PITCH	YAW	ROLL	PL ID
	-1014	-367	-412	6	335	276	2

BRAKES – ON (tb-ON)

PARAM – PORT TEMP

JOINT – CRIT TEMP

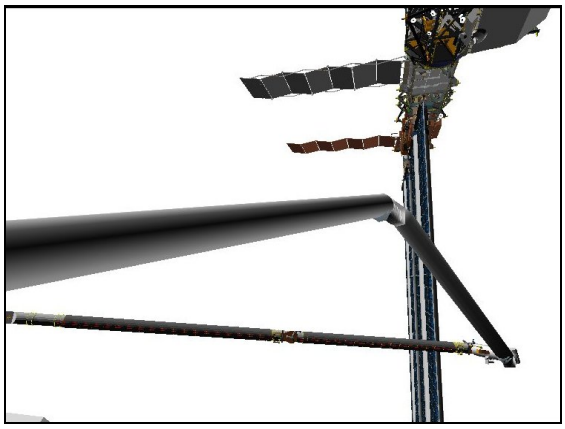

CCTV A (75,10)

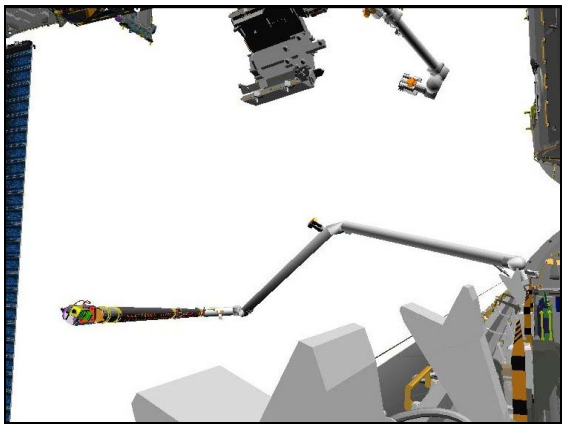

CCTV B (-25,5)

MNVR FROM -Y TRACKER CLEAR OR SLP VIEWING WITH OBSS TO UNDOCK

1. SETUP

NOTE

This procedure is designed to maneuver SRMS with OBSS from either -Y STAR TRACKER CLEAR or SLP VIEWING positions to UNDOCK position. Clearance to current SSRMS position must be verified prior to executing this procedure

DNLK MON 1	A
DTV MON 2	C (B)

SM 94 PDRS CONTROL

√PL ID, ITEM 3: 2

√INIT ID, ITEM 24: 2

Review GENERIC END EFFECTOR CUE CARD – ISS/SHUTTLE DOCKED OPS

2. MNVR TO UNDOCK CLEAR

SM 94 PDRS CONTROL

END POS – ITEM 18 -1 0 3 0 +2 2 7 -6 1 4 EXEC

ATT – ITEM 21 +2 8 4 +2 7 0 +2 7 0 EXEC

CMD CK – ITEM 25 EXEC (GOOD)

RHC RATE – COARSE (RATE MIN tb-OFF)

BRAKES – OFF (tb-OFF)

MODE – OPR CMD, ENTER (READY lt on)

AUTO SEQ – PROCEED (IN PROG lt on)

When AUTO SEQ IN PROG lt – off:

BRAKES – ON (tb-ON)

PARAM – PORT TEMP

JOINT – CRIT TEMP

Verify at UNDOCK posn:

X	Y	Z	PITCH	YAW	ROLL	PL ID
-1030	+227	-614	284*	270	270*	2
SY	SP	EP	WP	WY	WR	
+26.1	+66.3	-49.2	-86.0	+10.7	-100.7	

*Display singularity

CCTV A (0,30)

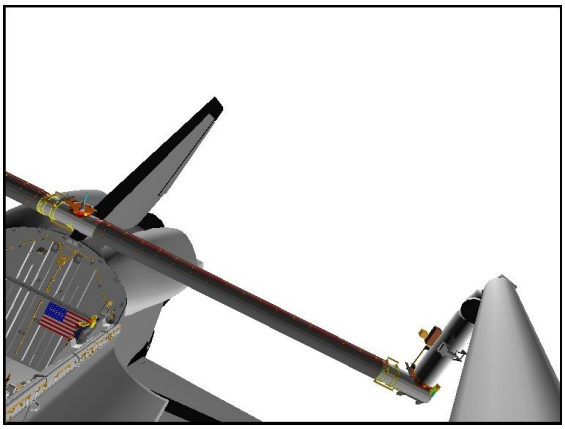

ELBOW (-30,-5)

This Page Intentionally Blank

LATE INSPECTION

OBSS LDRI RCC SURVEY – STBD DOCKED ..... FS 5-2
– NOSE CAP DOCKED ..... FS 5-31
– PORT DOCKED ..... FS 5-47

WARNING
Stbd PLBD radiator must be stowed

1. SETUP

SM 94 PDRS CONTROL

√PL ID, ITEM 3: 2
√INIT ID, ITEM 24: 2

Verify at SLP VIEWING posn:

X	Y	Z	PITCH	YAW	ROLL	PL ID
-975	-411	-412	353	342	265	2
SY	SP	EP	WP	WY	WR	
+125.4	+41.6	-42.6	+35.2	-50.0	-55.6	

Verify SSRMS at MT Translate Stow posn
SR: +128.3, -74.2, -37.3, +137.3, -123.4, -40.1, -134.5 :WR

Verify SPDM based on Lab PDGF at Stow posn
Arm 1: SR: -90.0, -45.0, +80.0, +45.0, -45.0, -110.0, 0.0 :WR
Arm 2: SR: -90.0, -45.0, -110.0, -45.0, +45.0, -110.0, 0.0 :WR
Body Roll: -50.0

2. MNVR TO STBD DOCKED LDRI ACAS START POSN

Mnvr Clearance Views	Cameras
OBSS-to-Wing/PLBD	C, RSC, S1 LOOB, Elbow

RHC RATE – VERN (RATE MIN tb-ON)
BRAKES – OFF (tb-OFF)
MODE – SINGLE, ENTER

Mnvr to STBD DOCKED LDRI ACAS START posn (within 1°):

	SY	SP	EP	WP	WY	WR	
SLP Viewing	+125.4	+41.6	-42.6	+35.2	-50.0	-55.6	
1: SP +		+60.0					
2: SY –	+50.0						
Intermediate 1	+50.0	+60.0	-42.6	+35.2	-50.0	-55.6	
	X	Y	Z	PITCH	YAW	ROLL	PL ID
	-1024	+80	-606	298	277	175	2

BRAKES – ON (tb-ON)

LATE INSPECTION

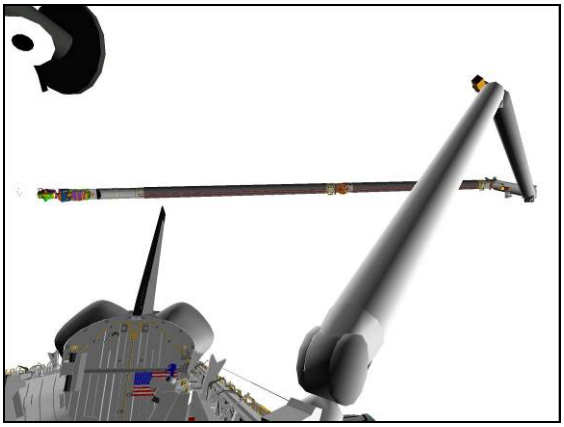

CCTV A (15,20)

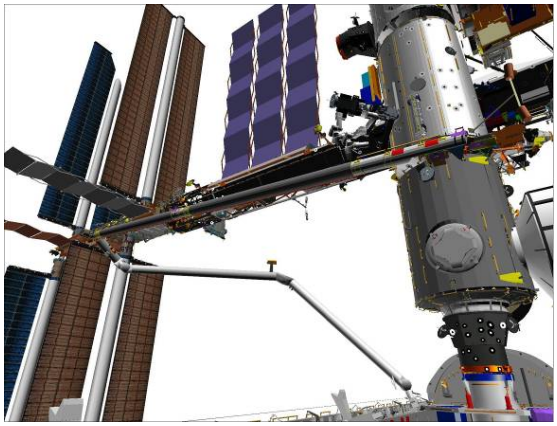

CCTV C (-35,25)

SM 94 PDRS CONTROL

END POS – ITEM 18 -9 1 1 +3 8 5 -4 5 0 EXEC
ATT – ITEM 21 +2 6 6 +3 1 7 +7 5 EXEC
CMD CK – ITEM 25 EXEC (GOOD)

RHC RATE – COARSE (RATE MIN tb-OFF)

BRAKES – OFF (tb-OFF)
MODE – OPR CMD, ENTER (READY lt on)

After PROCEED, if motion no longer apparent but POR within 1 in/1 deg and IN PROG lt – on:
AUTO SEQ – STOP

AUTO SEQ – PROCEED (IN PROG lt on)

When AUTO SEQ IN PROG lt – off:
BRAKES – ON (tb-ON)

INTERMEDIATE 2 posn:

	X	Y	Z	PITCH	YAW	ROLL	PL ID
√	-911	+385	-450	266	317	75	2
	SY	SP	EP	WP	WY	WR	
√	-32.8	+78.3	-58.6	+33.2	-59.7	-113.7	

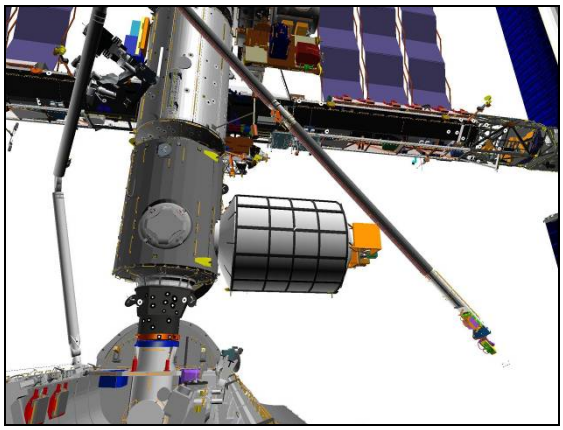

CCTV C(10,20)

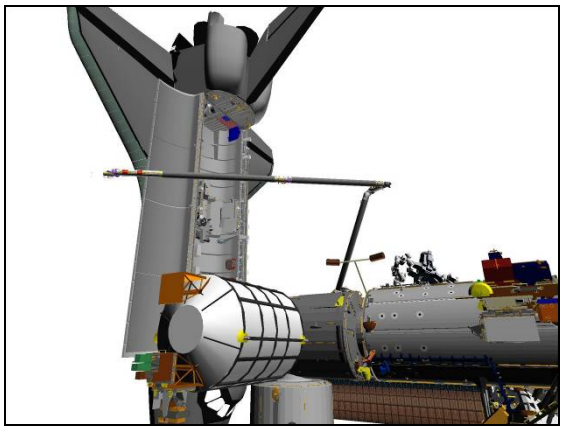

S1 OUTBOARD LOWER (60,20)

NOTE

Expect C/W SINGULARITY in the following single joint maneuver. SINGULARITY will extinguish between Points 1 and 2 of the following ACAS

RHC

RATE – VERN (RATE MIN tb-ON)
BRAKES – OFF (tb-OFF)
MODE – SINGLE, ENTER

Drive WY(-) to -77.2

	X	Y	Z	PITCH	YAW	ROLL	PL ID
√	-940	+291	-363	271	329	66	2
	SY	SP	EP	WP	WY	WR	
√	-32.8	+78.3	-58.6	+33.2	-77.2	-113.7	

BRAKES – ON (tb-ON)

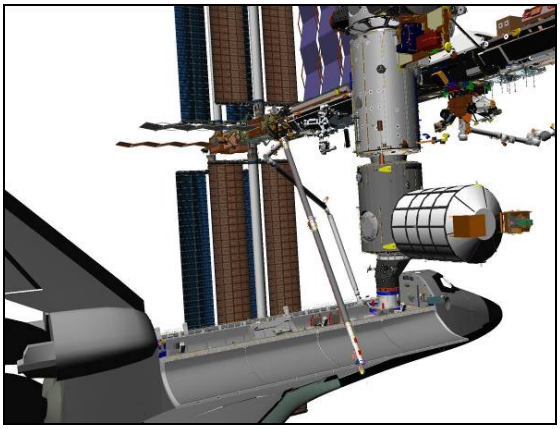

BIRD'S EYE

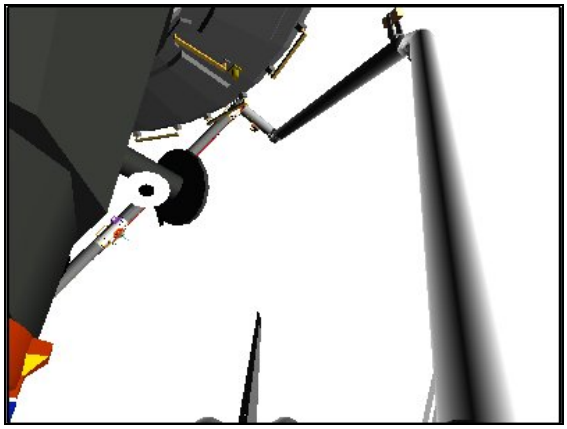

CCTV A (0,35)

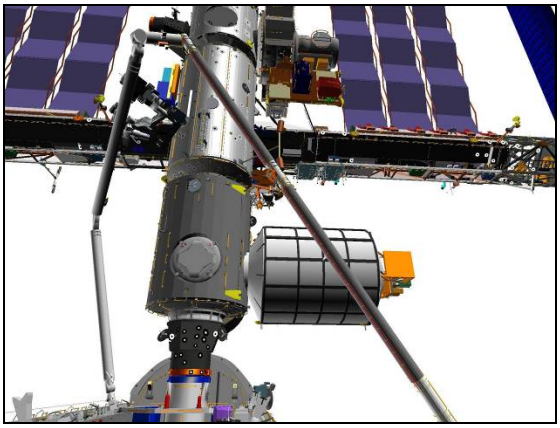

CCTV C (5,25)

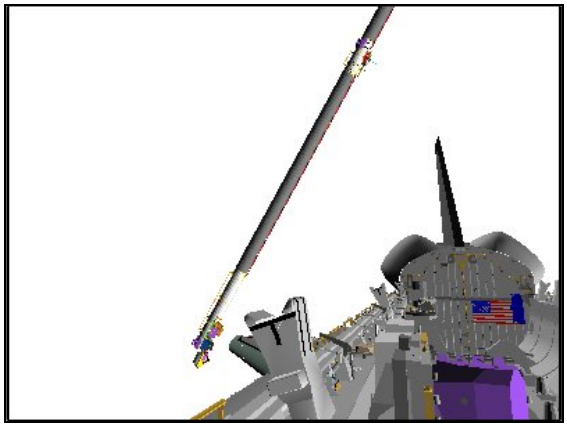

CCTV D (-20,10)

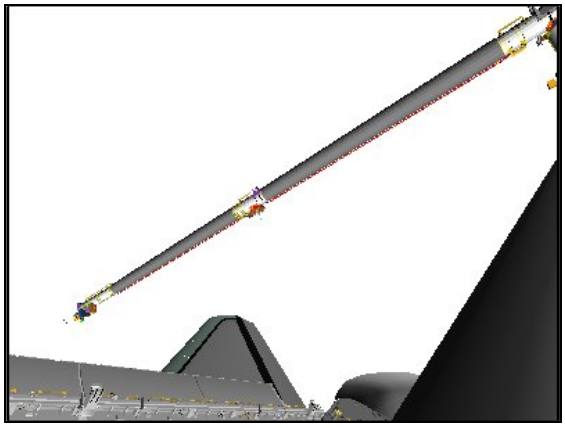

ELBOW (-40,-20)

3. STBD LDRI ACAS, SECTION 1

P/TV NOTE

Pan and tilt of LDRI/ITVC requires that VIDEO IN PL2 light illuminated with green VPU jumper in 'LDRI/ITVC'.

LDRI/ITVC view must be displayed on orbiter Monitors 1 or 2 to see pan and tilt values.

When pan and tilt of LDRI/ITVC finished, crews should ensure that VIDEO IN PL2 light not illuminated, to prevent inadvertant pan, tilt, or pan-tilt reset of LDRI/ITVC

NOTE

Section 1 scans RCC Zone 6, Panels 1 → 7.
Time between Pts 1 and 3 ~ 1:10 min

A7U MUX 1 L ← MIDDECK

LDRI MODE 6 pb – push (flickering LDRI displayed)

DTV ← PL2

CAMR CMD PAN/TILT – HI RATE
PAN – L (to hard stop)
TILT – UP (to hard stop)
PAN/TILT – RESET, HI RATE (LO within 10°)

A7U PAN/TILT to match LDRI view shown below

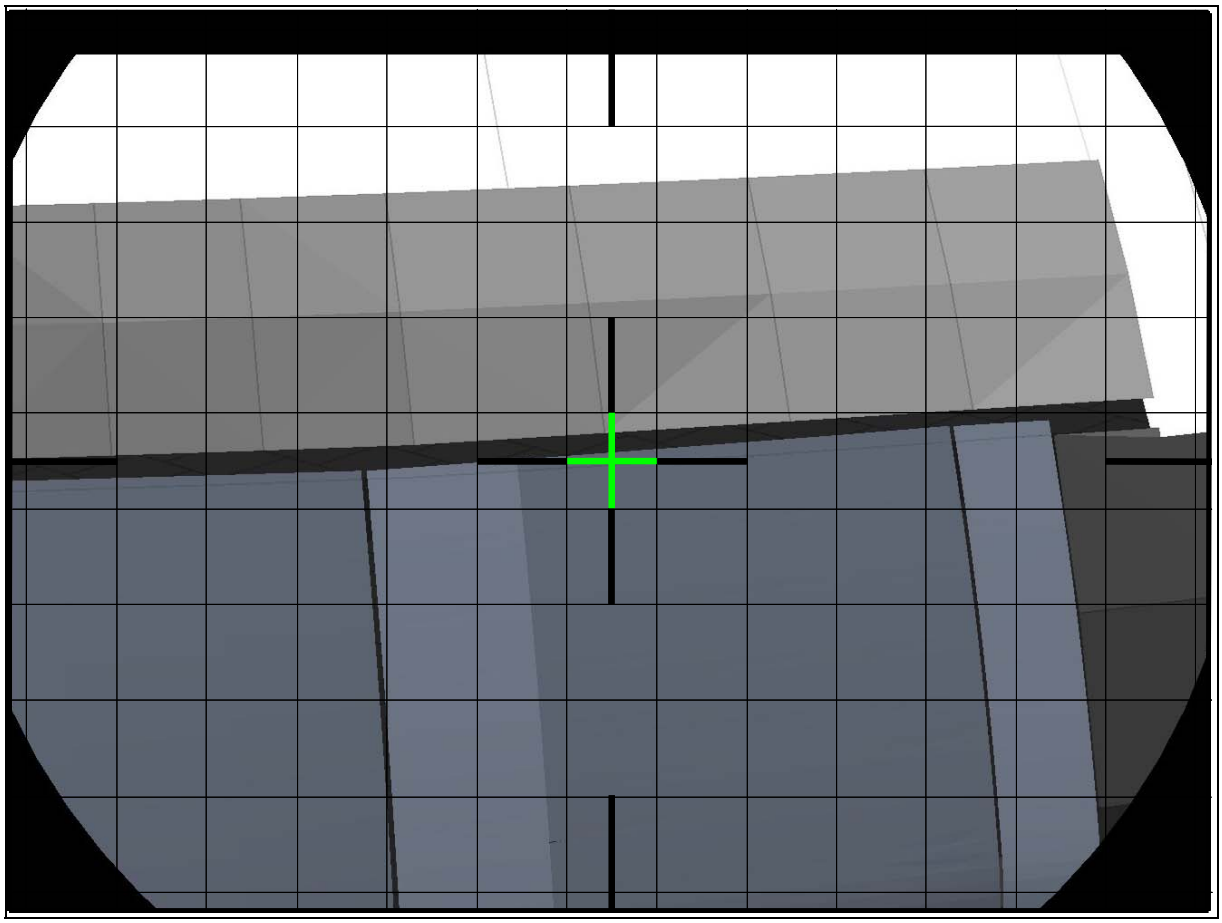

LDRI (54,-74)

√MCC to verify correct sensor view
Note PAN/TILT: _____, _____

A7U √DTV ← PL2
VID OUT – not DTV
VID IN – not PL2

For survey scan pattern, refer to OBSS LDRI SCAN PATTERN CUE CARD – STBD DOCKED (CUE CARD CONFIG)

PCS MSS: SSRMS: Thrusters: Thruster Controls for MSS Ops

Verify 'Desat Request' Inhibit

SM 94 PDRS CONTROL
AUTO MODES – ITEM 13 +1 +2 +3 +4 EXEC

RHC RATE – COARSE (RATE MIN tb-OFF)

BRAKES – OFF (tb-OFF)
MODE – AUTO 1, ENTER (READY lt on)

* If unable to enter AUTO mode (no AUTO READY lt): *
* √Joint angles and adjust as reqd *

SM 94 PDRS CONTROL

√START PT, ITEM 17: 1

Section 1 Clearance Views	Cameras
OBSS-to-PLBD	C, D, ELBOW, RSC
UPPER ARM-to-US LAB	A, B, P1 LOOB

L10(VTR) REC pb – push, hold
PLAY pb – push, simo (red ●)

AUTO SEQ – PROCEED (IN PROG lt on)

ACAS, pause pts **shaded in bold**, ● col indicates data recording (black = VTR on)

Pt	X	Y	Z	PITCH	YAW	ROLL	●	
1P	**-940**	**+291**	**-363**	**271**	**329**	**66**		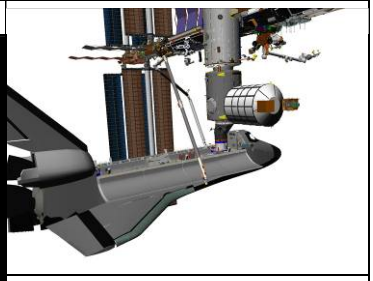
2	-971	+287	-376	270	322	61		
3P	**-1052**	**+293**	**-373**	**273**	**322**	**63**		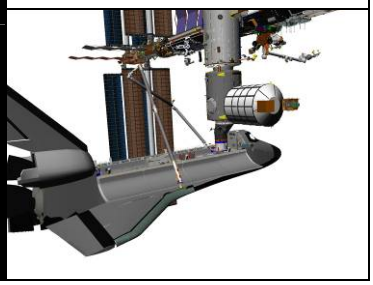

When AUTO SEQ READY lt – on:
L10(VTR) STOP pb – push (no red ●)

4. <u>STBD LDRI ACAS, CONTINUE SECTION 1</u>

<u>NOTE</u>
Between Pts 3 & 4, arm adjusts for survey of Zone 6.
Section 1 continues to scan Zone 6, Panels 7 → 11.
Time between Pts 3 and 4 ~ 1:00 min

Section 1 Clearance Views	Cameras
OBSS-to-PLBD	C, D, ELBOW, RSC
UPPER ARM-to-US LAB	A, B, P1 LOOB

AUTO SEQ – PROCEED (IN PROG lt on)

Pt	X	Y	Z	PITCH	YAW	ROLL	•	
3P	-1052	+293	-373	273	322	63		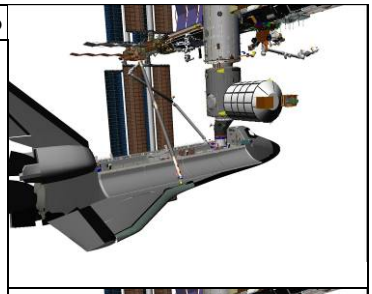
4P	-1020	+265	-407	273	308	100		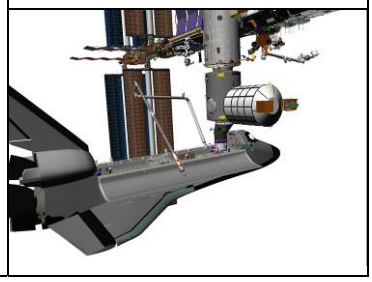

When AUTO SEQ READY lt – on:

A7U PAN/TILT to match LDRI view shown below

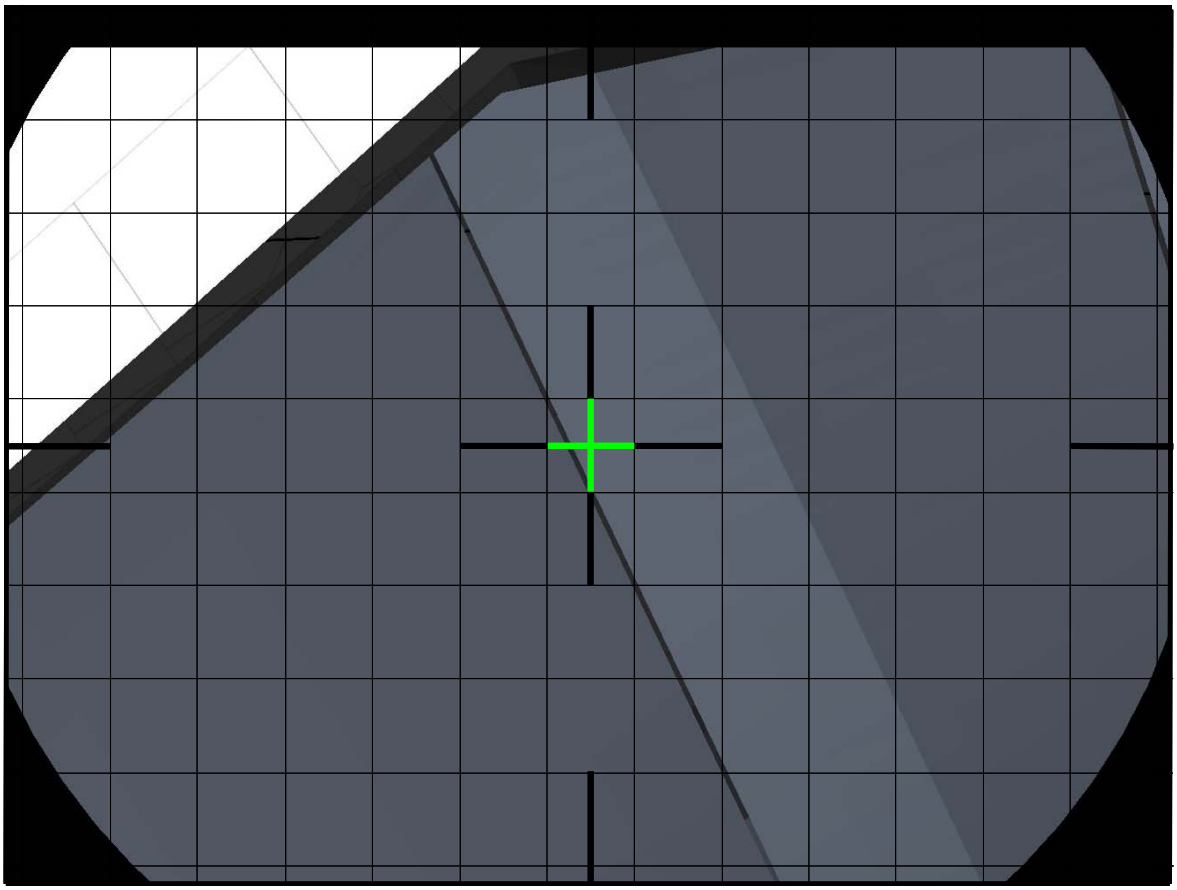

LDRI: +110 (right), -89 (down)

√MCC to verify correct sensor view
Note PAN/TILT: _____, _____

A7U √DTV ← PL2
VID OUT – not DTV
VID IN – not PL2

NOTE

Time between Pts 4 and 5 ~ 1:00 min

L10(VTR) REC pb – push, hold
PLAY pb – push, simo (red ●)

AUTO SEQ – PROCEED (IN PROG lt on)

Pt	X	Y	Z	PITCH	YAW	ROLL	●	
4P	**- 1020**	**+265**	**-407**	**273**	**308**	**100**		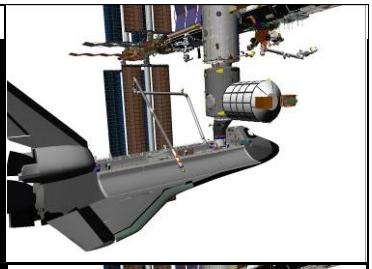
5P	**-1104**	**+321**	**-383**	**274**	**305**	**101**		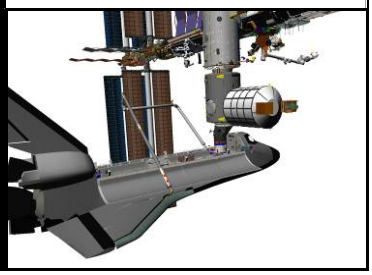

When AUTO SEQ READY lt – on:

L10(VTR) STOP pb – push (no red ●)

5. STBD LDRI ACAS, CONTINUE SECTION 1

NOTE

Between Pts 5 & 6, arm adjusts for survey of Zone 6. Section 1 continues to scan Zone 6, Panels 11 → 22. Time between Pts 5 & 6 ~ 1:10 min

Section 1 Clearance Views	Cameras
OBSS-to-PLBD/WING	C, D, ELBOW, RSC, US LAB
UPPER ARM-to-US LAB	A, B, P1 LOOB

AUTO SEQ – PROCEED (IN PROG lt on)

Pt	X	Y	Z	PITCH	YAW	ROLL	●	
5P	**-1104**	**+321**	**-383**	**274**	**305**	**101**		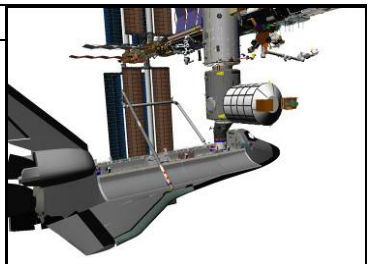
6P	**-1106**	**+278**	**-391**	**284**	**320**	**160**		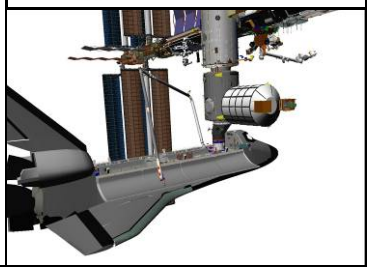

When AUTO SEQ READY lt – on:

A7U PAN/TILT to match LDRI view shown below

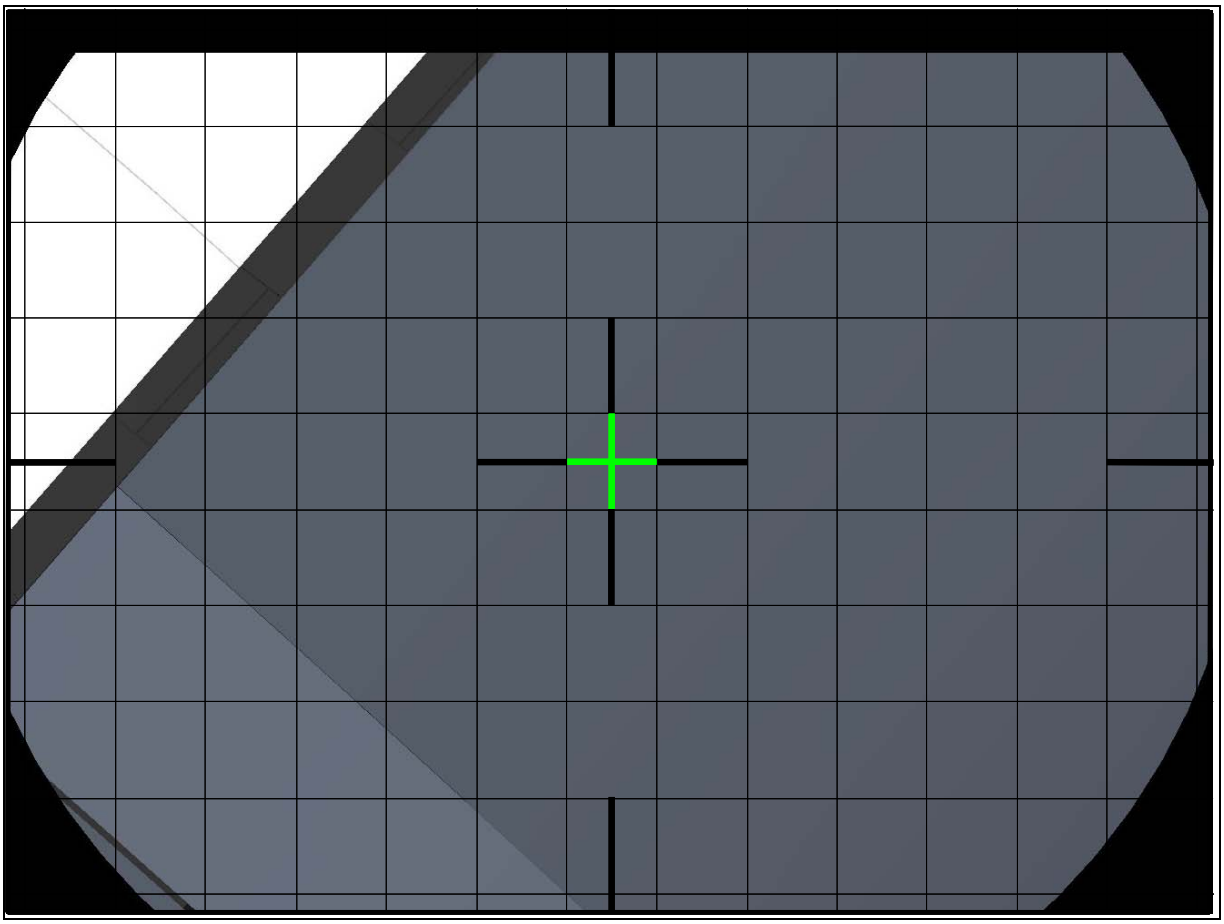

LDRI: +143 (right), -116 (down)

√MCC to verify correct sensor view
Note PAN/TILT: _____, _____

A7U √DTV ← PL2
VID OUT – not DTV
VID IN – not PL2

NOTE
Time between Pts 6 and 10 ~ 3:20 min

L10(VTR) REC pb – push, hold
PLAY pb – push, simo (red ●)

AUTO SEQ – PROCEED (IN PROG lt on)

Pt	X	Y	Z	PITCH	YAW	ROLL	●	
6P	**-1106**	**+278**	**-391**	**284**	**320**	**160**		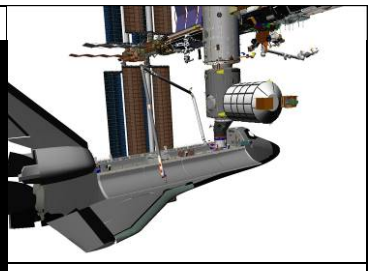
7	-1235	+406	-391	284	320	160		
8	-1218	+419	-388	307	325	171		
9	-1262	+463	-388	307	325	171		
10P	**-1340**	**+472**	**-392**	**306**	**319**	**171**		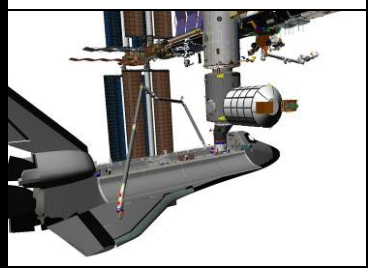

When AUTO SEQ READY lt – on:

L10(VTR) STOP pb – push (no red ●)

6. <u>STBD LDRI ACAS, SECTION 2</u>

<u>NOTE</u>

Between Pts 10 & 11, arm adjusts for survey of Zone 4 & 5. Section 2 then scans Zone 5, Panels 22 → 10. Time between Pts 10 and 11 ~ 0:40 min

Section 2 Clearance Views	Cameras
OBSS-to-Wing	C, D, ELBOW, RSC
UPPER ARM-to-US LAB	A, B, P1 LOOB

AUTO SEQ – PROCEED (IN PROG lt on)

Pt	X	Y	Z	PITCH	YAW	ROLL	●	
10P	**-1340**	**+472**	**-392**	**306**	**319**	**171**		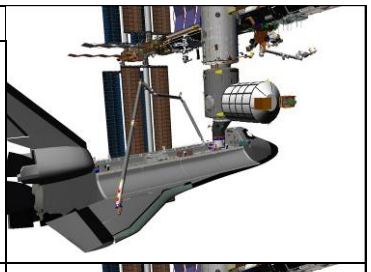
11P	**-1342**	**+517**	**-355**	**302**	**326**	**164**		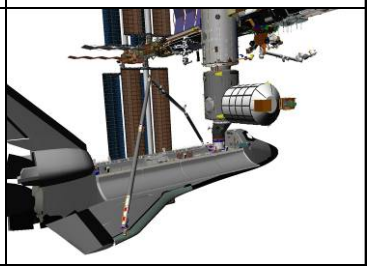

When AUTO SEQ READY lt – on:

A7U PAN/TILT to match LDRI view shown below

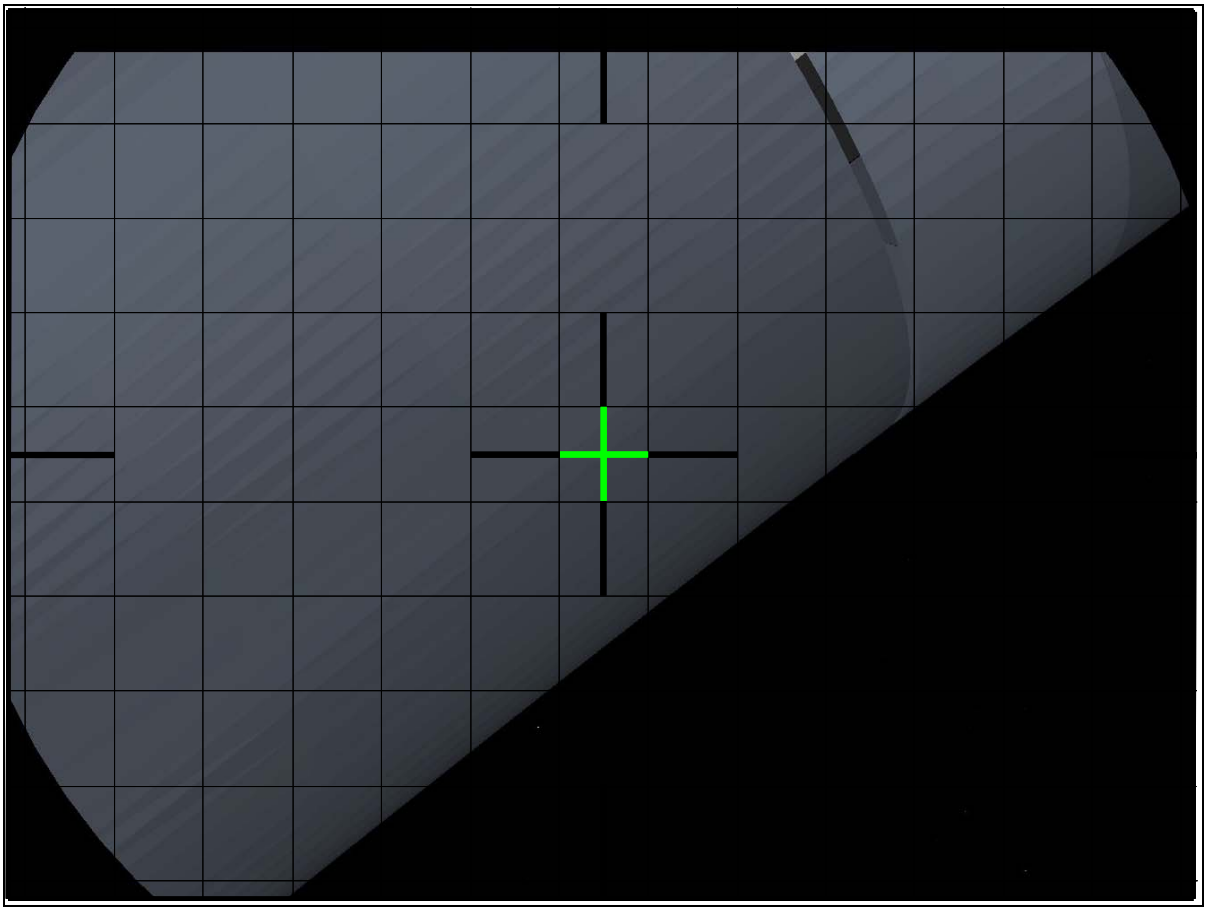

LDRI: +135 (left), -83 (up)

√MCC to verify correct sensor view
Note PAN/TILT: _____, _____

A7U √DTV ← PL2
VID OUT – not DTV
VID IN – not PL2

NOTE

Time between Pts 11 and 13 ~ 2:20 min

L10(VTR) REC pb – push, hold
PLAY pb – push, simo (red ●)

AUTO SEQ – PROCEED (IN PROG lt on)

Pt	X	Y	Z	PITCH	YAW	ROLL	●	
11P	**-1342**	**+517**	**-355**	**302**	**326**	**164**		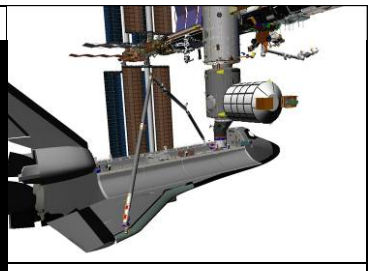
12	-1240	+498	-354	294	315	136		
13P	**-1064**	**+312**	**-354**	**294**	**315**	**136**		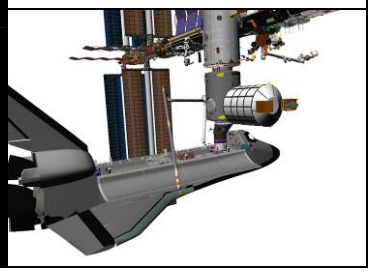

When AUTO SEQ READY lt – on:

L10(VTR) STOP pb – push (no red ●)

7. <u>STBD LDRI ACAS, SECTION 3</u>

<u>NOTE</u>

Between Pts 13 & 15, arm adjusts for survey of Zone 3. Section 3 then scans Zone 3, Panels 10 → 22. Time between Pts 13 & 15 ~ 1:50 min

Section 2 Clearance Views	Cameras
OBSS-to-PLBD	C, D, ELBOW, RSC
UPPER ARM-to-US LAB	A, B, P1 LOOB

AUTO SEQ – PROCEED (IN PROG lt on)

Pt	X	Y	Z	PITCH	YAW	ROLL	●	
13P	**-1064**	**+312**	**-354**	**294**	**315**	**136**		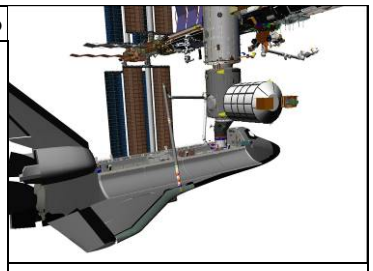
14	-1073	+333	-345	284	333	141		
15P	**-1073**	**+341**	**-290**	**284**	**333**	**156**		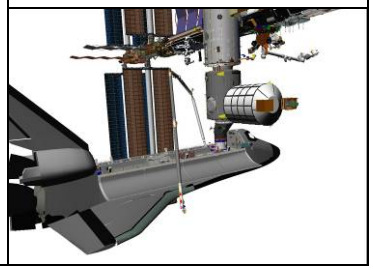

When AUTO SEQ READY lt – on:

A7U PAN/TILT to match LDRI view shown below

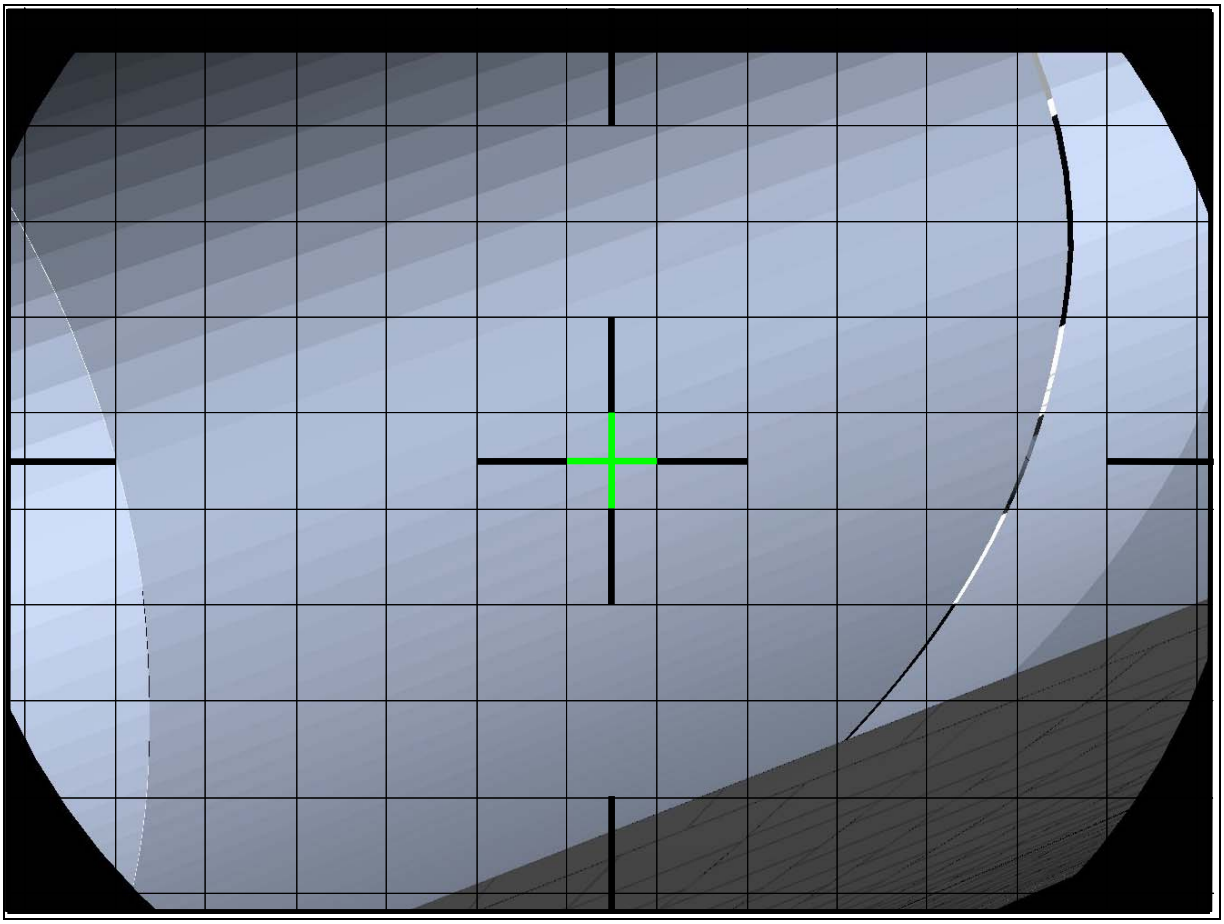

LDRI: +170 (right), -61 (up)

√MCC to verify correct sensor view
Note PAN/TILT: _____, _____

A7U √DTV ← PL2
VID OUT – not DTV
VID IN – not PL2

NOTE
Time between Pts 15 & 18 ~ 2:00 min

L10(VTR) REC pb – push, hold
PLAY pb – push, simo (red ●)

AUTO SEQ – PROCEED (IN PROG lt on)

Pt	X	Y	Z	PITCH	YAW	ROLL	●	
15P	**-1073**	**+341**	**-290**	**284**	**333**	**156**		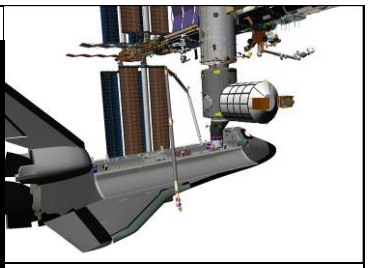
16	-1241	+505	-295	298	331	157		
17	-1281	+528	-295	305	331	157		
18P	**-1333**	**+541**	**-285**	**304**	**334**	**155**		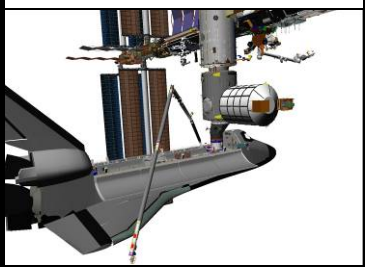

When AUTO SEQ READY lt – on:

L10(VTR) STOP pb – push (no red ●)

8. <u>STBD LDRI ACAS, SECTION 4</u>

<u>NOTE</u>

Minimum clearance OBSS-to-RCC = 47 in between pts 18-20. Between Pts 18 & 20, arm adjusts for survey of Zones 2 & 3. Section 4 then scans Zones 2 & 3, Panels 22 → 10. Time between Pts 18 & 20 ~ 3:20 min

Section 3 Clearance Views	Cameras
OBSS-to-PLBD	C, D, ELBOW, RSC, US LAB
UPPER ARM-to-US LAB	A, B, P1 LOOB
LOWER ARM-to-US LAB	ELBOW

AUTO SEQ – PROCEED (IN PROG lt on)

Pt	X	Y	Z	PITCH	YAW	ROLL	●	
18P	**-1333**	**+541**	**-285**	**304**	**334**	**155**		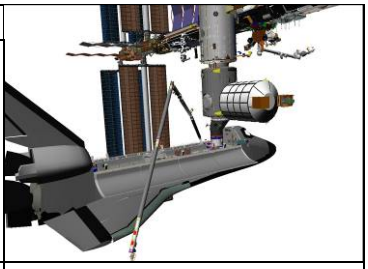
19	-1300	+521	-193	307	341	141		
20P	**-1331**	**+506**	**-194**	**317**	**341**	**23**		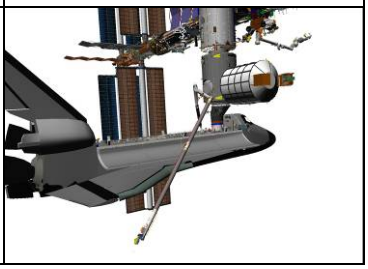

When AUTO SEQ READY lt – on:

A7U PAN/TILT to match LDRI view shown below

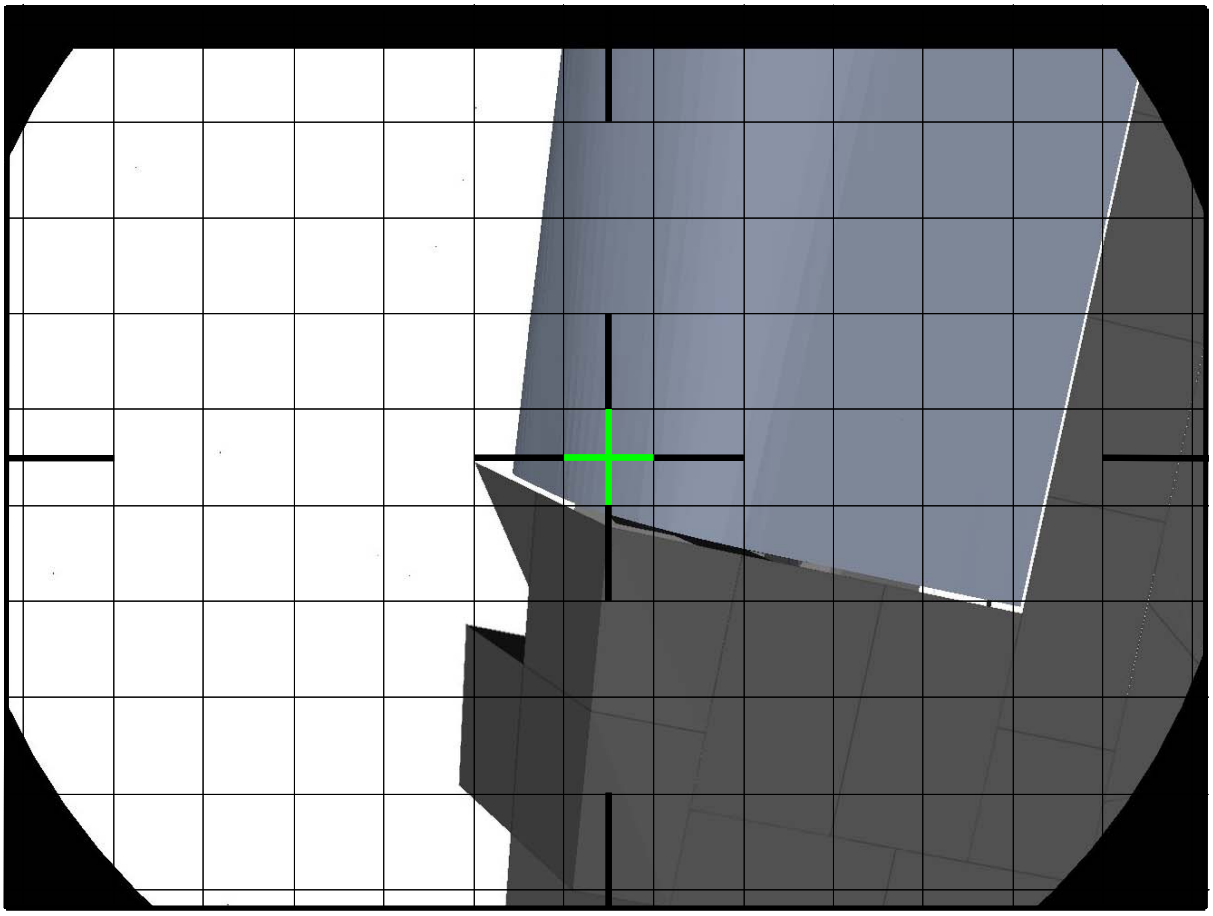

LDRI: +90 (left), -47 (up)

√MCC to verify correct sensor view
Note PAN/TILT: _____, _____

A7U √DTV ← PL2
VID OUT – not DTV
VID IN – not PL2

NOTE

Minimum clearance OBSS-to-RCC = 46 in between pts 20 & 26.
Time between Pts 20 & 26 ~ 2:30 min

L10(VTR) REC pb – push, hold
PLAY pb – push, simo (red ●)

AUTO SEQ – PROCEED (IN PROG lt on)

Pt	X	Y	Z	PITCH	YAW	ROLL	●	
20P	**-1331**	**+506**	**-194**	**317**	**341**	**23**		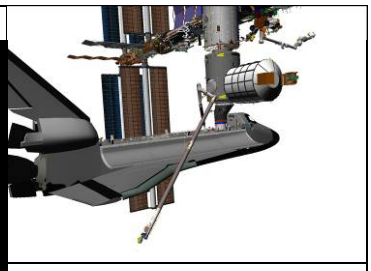
21	-1288	+480	-227	317	341	23		
22	-1265	+459	-232	316	342	24		
23	-1265	+472	-213	317	341	23		
24	-1161	+370	-224	303	349	29		
25	-1075	+298	-223	292	354	33		
26P	**-1053**	**+298**	**-210**	**+290**	**354**	**34**		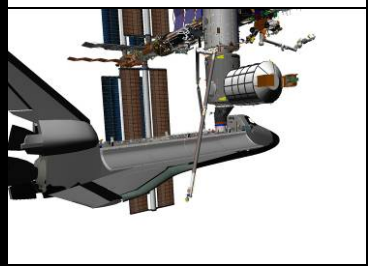

When AUTO SEQ READY lt – on:

L10(VTR) STOP pb – push (no red ●)

A7U MUX 1 L ← MIDDECK
LDRI MODE 2 pb – push (ITVC video displayed)

√VIDEO OUT – not DTV
√VIDEO IN – not PL2

9. <u>MANEUVER TO DOCKED STBD LDRI ACAS PART 2, INTERMEDIATE POSN</u>

<u>NOTE</u>

Between Pts 26 & 29, arm adjusts for Part 2 of the Stbd Survey.
Time between Pts 26 & 29 ~ 20:20 min

Section 3 Clearance Views	Cameras
OBSS-to-Wing	C, D, RSC, US LAB
UPPER ARM-to-US LAB	A, B, ELBOW, P1 LOOB

AUTO SEQ – PROCEED (IN PROG lt on)

Pt	X	Y	Z	PITCH	YAW	ROLL	•	
26P	**-1053**	**+298**	**-210**	**+290**	**354**	**34**		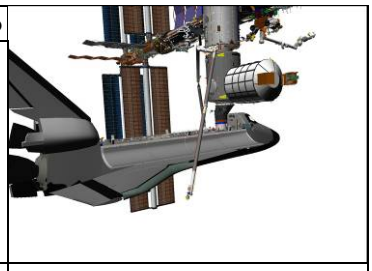
27	-1298	+630	-627	339	321	81		
28	-1451	-124	-1193	59	11	89		
29P	**-1273**	**-781**	**-128**	**355**	**39**	**357**		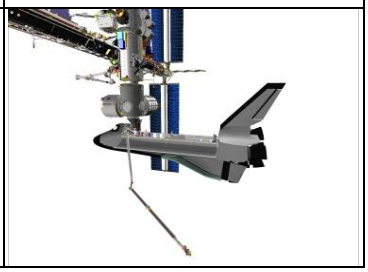

When AUTO SEQ IN PROG lt – off:
BRAKES – ON (tb-ON)

10. <u>MANEUVER TO DOCKED STBD LDRI ACAS PART 2</u>

RHC
RATE – VERN (RATE MIN tb-ON)
BRAKES – OFF (tb-OFF)
MODE – SINGLE, ENTER

SJ Mnvr Clearance Views	Cameras
OBSS-to-ORBITER	A, B, ELBOW, P1 LOOB

Mnvr to DOCKED STBD LDRI ACAS PART 2 (within 1°):

	SY	SP	EP	WP	WY	WR	
Stbd LDRI ACAS 1 End	+67.9	+33.9	-88.9	-17.2	+14.4	-370.1	
1: WY –					-1.1		
2: WR +						-131.7	
Stbd LDRI ACAS 2 Start	+67.9	+33.9	-88.9	-17.2	-1.1	-131.7	
	X	Y	Z	PITCH	YAW	ROLL	PL ID
	-903	+183	-212	31	278	24	2

SM 94 PDRS CONTROL
END POS – ITEM 18 -<u>9</u> <u>0</u> <u>3</u> +<u>1</u> <u>8</u> <u>3</u> -<u>2</u> <u>1</u> <u>2</u> EXEC
END ATT – ITEM 21 +<u>3</u> <u>1</u> +<u>2</u> <u>7</u> <u>8</u> +<u>2</u> <u>4</u> EXEC
CMD CK – ITEM 25 EXEC (GOOD)

RHC RATE – COARSE (RATE MIN tb-OFF)

BRAKES – OFF (tb-OFF)
MODE – OPR CMD, ENTER (READY lt on)

AUTO SEQ – PROCEED (IN PROG lt on)

When AUTO SEQ IN PROG lt – off:
BRAKES – ON (tb-ON)

STBD LDRI ACAS 2 START posn:

	X	Y	Z	PITCH	YAW	ROLL	PL ID
√	-903	+183	-212	31	278	24	2
	SY	SP	EP	WP	WY	WR	
√	+67.9	+33.9	-88.9	-17.2	-1.1	-131.7	

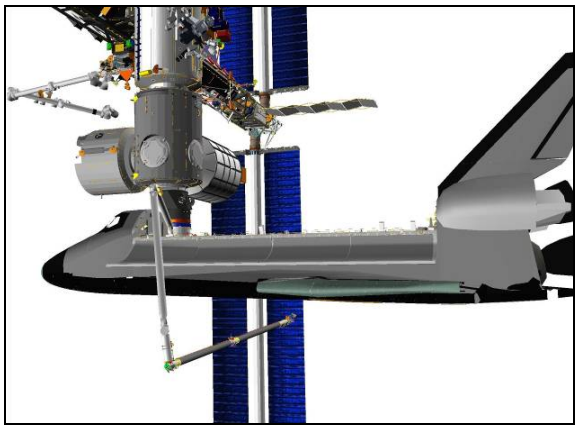

BIRD'S EYE

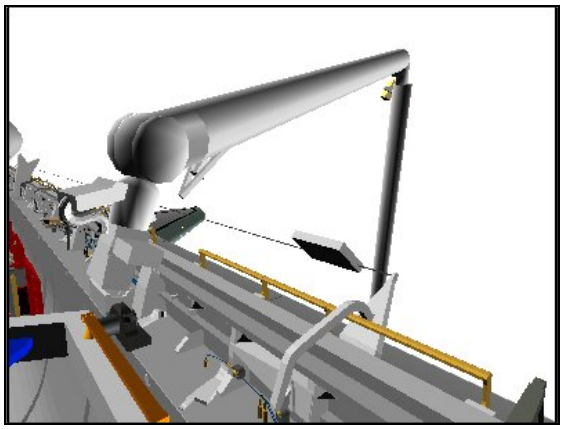

CCTV A (40,-10)

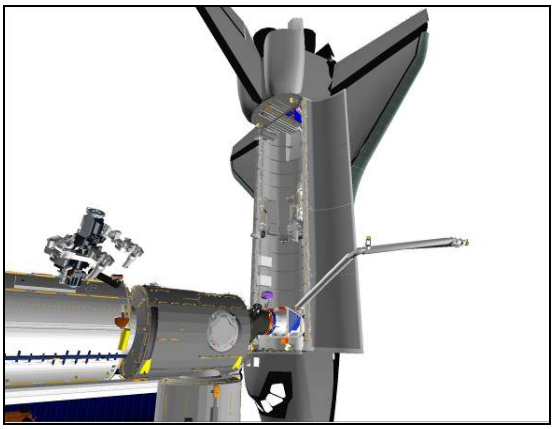

P1 LOWER OUTBOARD (130,20)

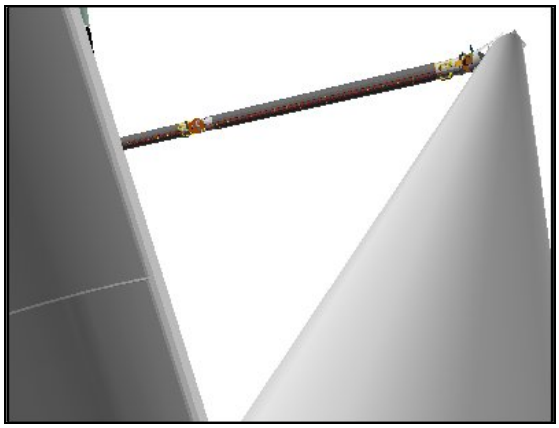

ELBOW (-30,-30)

11. <u>STBD LDRI ACAS, SECTION 5</u>

A7U MUX 1 L ← MIDDECK
LDRI MODE 6 pb – push (flickering LDRI displayed)

PAN/TILT to match LDRI view shown below

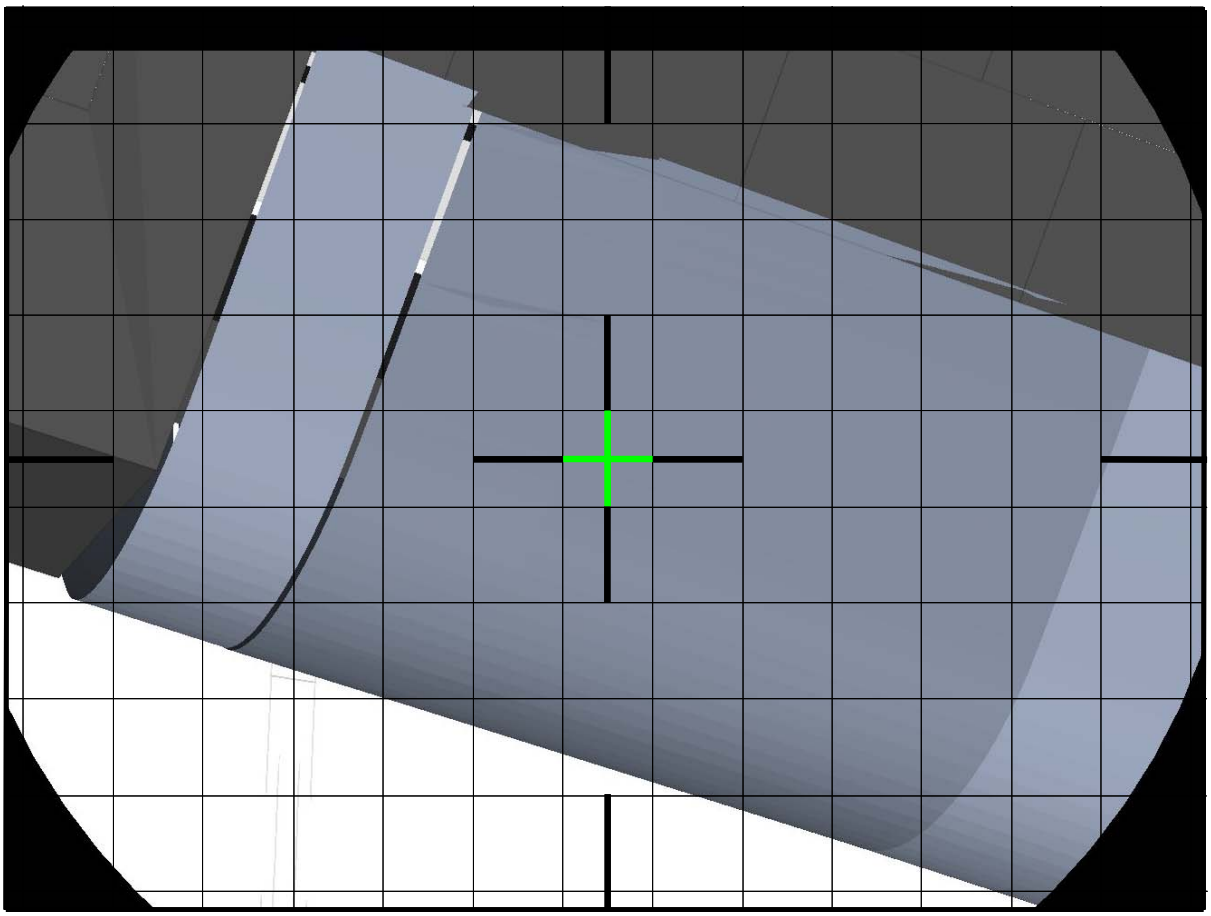

LDRI: 52 (left), -77 (down)

√MCC to verify correct sensor view
Note PAN/TILT: _____, _____

A7U √DTV ← PL2
VID OUT – not DTV
VID IN – not PL2

RHC √RATE – COARSE (RATE MIN tb-OFF)

BRAKES – OFF (tb-OFF)
MODE – AUTO 2, ENTER (READY lt on)

SM 94 PDRS CONTROL

√START PT, ITEM 17: 30

Monitor ACAS progress

<u>NOTE</u>

Section 5 scans RCC Zones 1 & 2, Panels 1 → 10. Monitor PLBD clearance with Elbow camera (-30, -30). Section 5 run time ~ 1:40 min

SJ Mnvr Clearance Views	Cameras
LOWER ARM-to-PLBD	A, B, ELBOW, P1 LOOB
OBSS-to-ORBITER	RSC

L10(VTR) REC pb – push, hold
PLAY pb – push, simo (red ●)

AUTO SEQ – PROCEED (IN PROG lt on)

ACAS, pause pts **shaded in bold**, ● col indicates data recording (black = VTR on)

Pt	X	Y	Z	PITCH	YAW	ROLL	●	
30P	**-903**	**+183**	**-212**	**31**	**278**	**24**		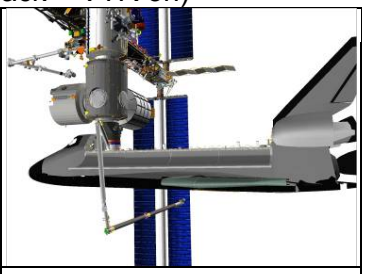
31	-1008	+201	-214	15	291	357		
32	-1062	+224	-214	15	291	357		
33P	**-1120**	**+274**	**-208**	**11**	**298**	**345**		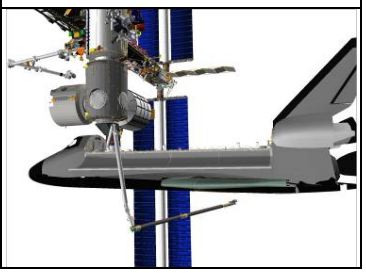

When AUTO SEQ READY lt – on:
L10(VTR) STOP pb – push (no red ●)

12. <u>STBD LDRI ACAS, SECTION 6</u>

<u>NOTE</u>
Between Pts 33 & 34, arm adjusts for survey of Zones 2 & 3.
Section 6 scans Zones 2 & 3, Panels 9 → 1. Time between
Pts 33 & 34 ~ 1:00 min

Section 6 Clearance Views	Cameras
LOWER ARM-to-PLBD	A, B, ELBOW, P1 LOOB
OBSS-to-ORBITER	RSC

AUTO SEQ – PROCEED (IN PROG lt on)

Pt	X	Y	Z	PITCH	YAW	ROLL	•	
33P	**-1120**	**+274**	**-208**	**11**	**298**	**345**		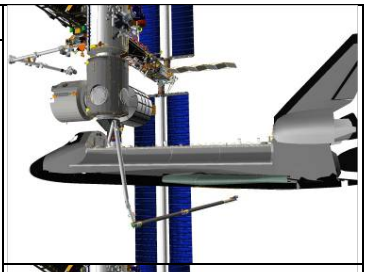
34P	**-1028**	**+280**	**-238**	**18**	**298**	**7**		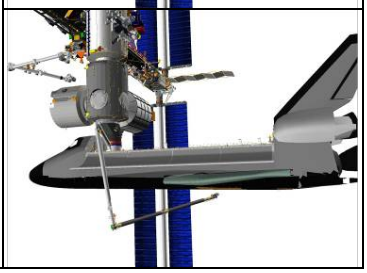

When AUTO SEQ READY lt – on:

A7U PAN/TILT to match LDRI view shown below

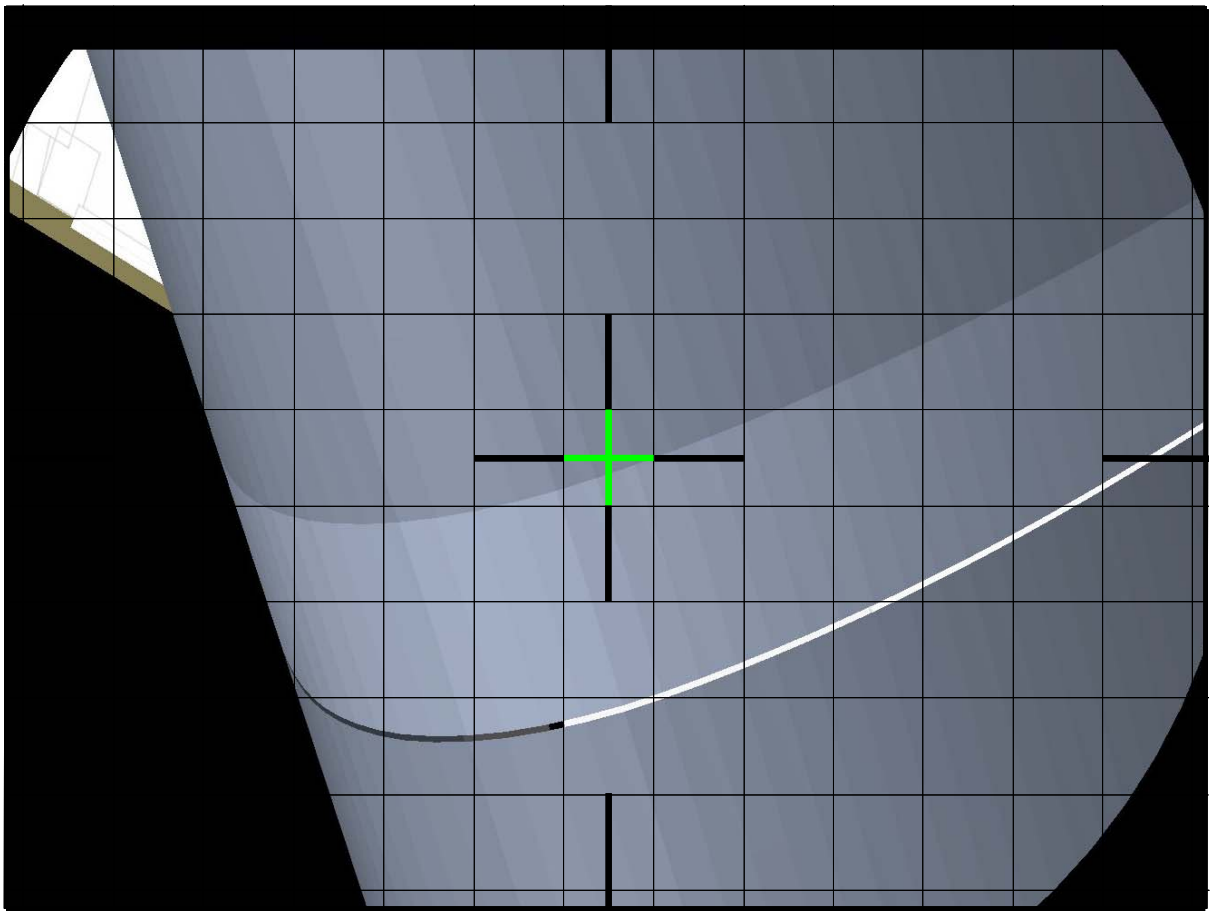

LDRI: +16 (left), -90 (down)

√MCC to verify correct sensor view
Note PAN/TILT: _____, _____

A7U √DTV ← PL2

NOTE

Recording will continue during the following PAN/TILT changes

L10(VTR) REC pb – push, hold
PLAY pb – push, simo (red ●)

Record image for 30 sec

A7U PAN/TILT to match LDRI view shown below

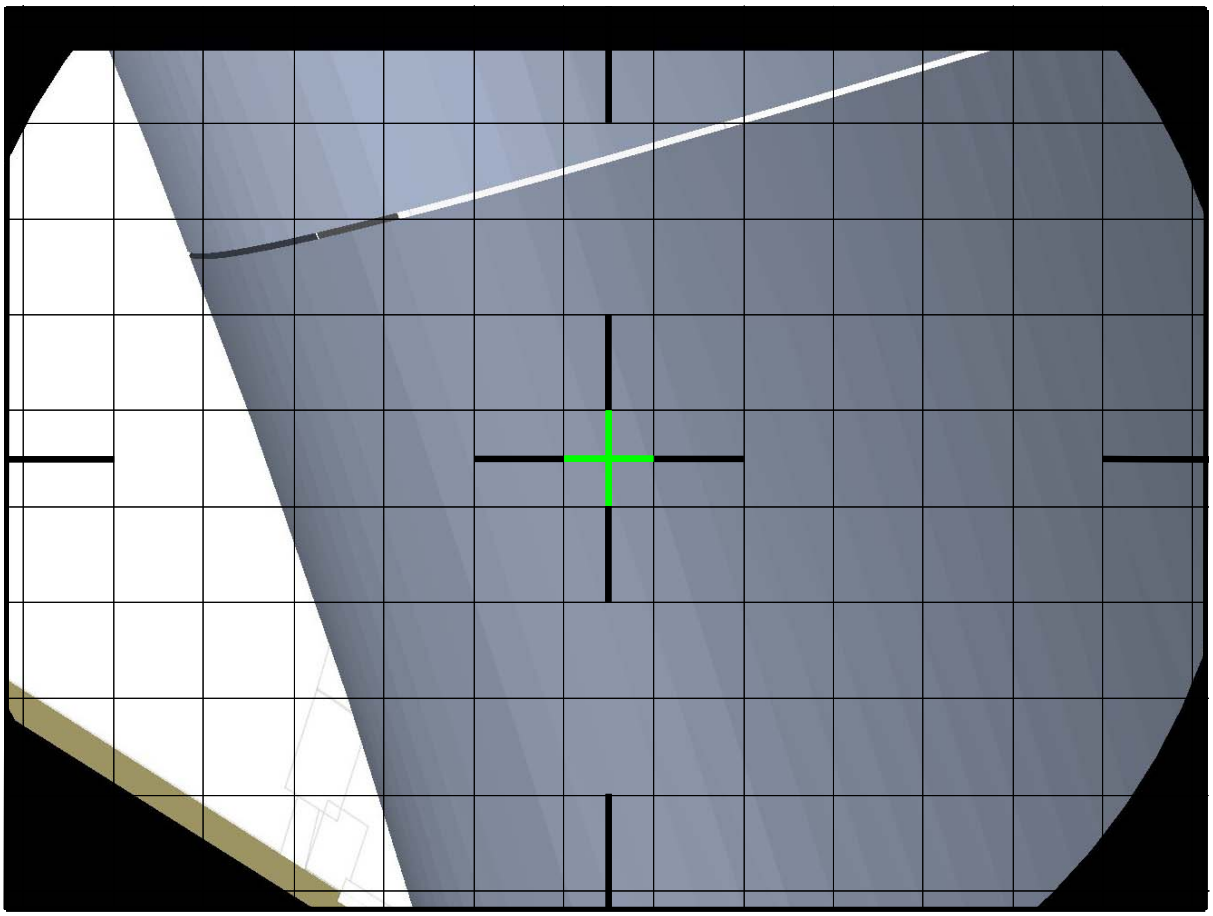

LDRI: +20 (right), -80 (up)

√MCC to verify correct sensor view
Note PAN/TILT: _____, _____

A7U √DTV ← PL2

Record image for 30 sec

A7U PAN/TILT to match LDRI view shown below

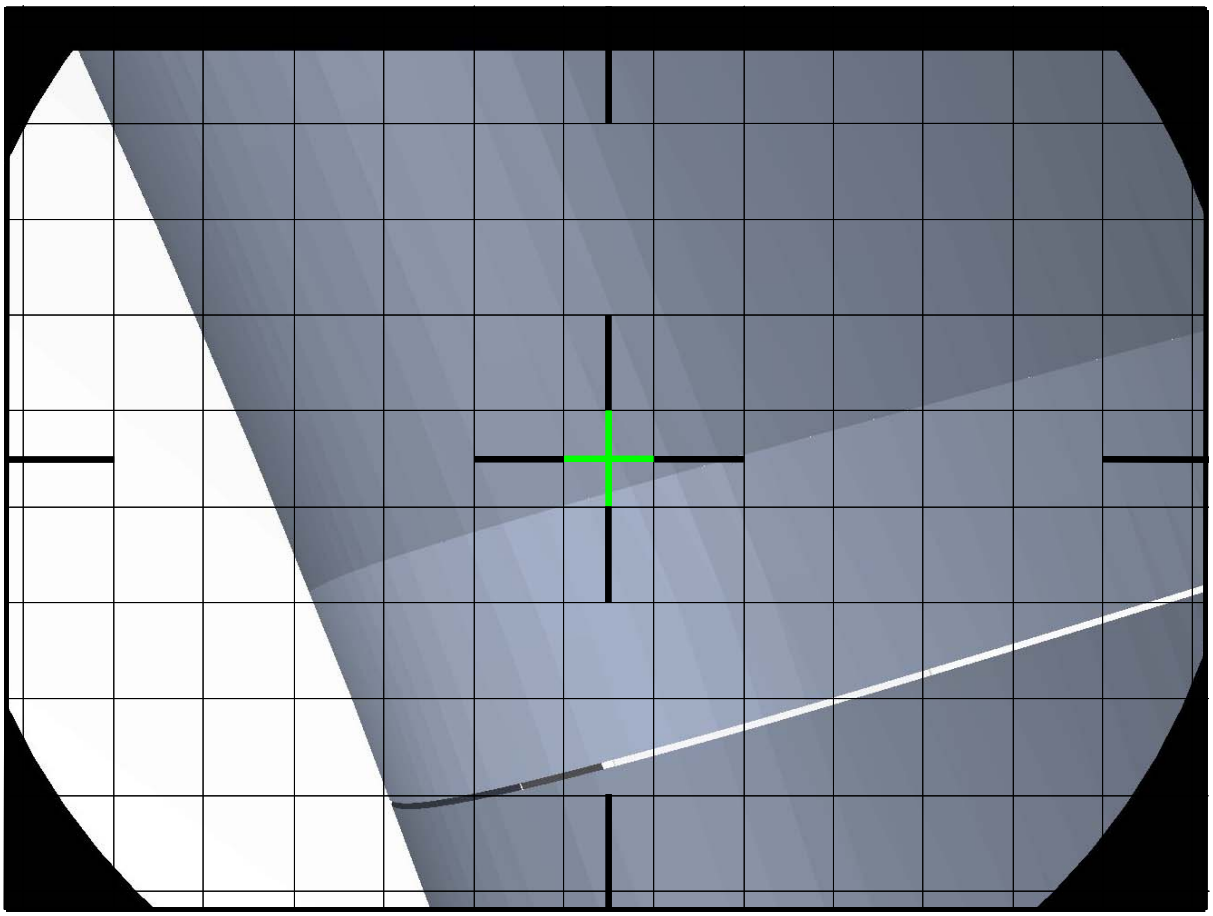

LDRI: +23 (right), -72 (up)

√MCC to verify correct sensor view
Note PAN/TILT: _____, _____

A7U √DTV ← PL2
VID OUT – not DTV
VID IN – not PL2

NOTE
Time between Pts 34 & 36 ~ 1:30 min

AUTO SEQ – PROCEED (IN PROG lt on)

Pt	X	Y	Z	PITCH	YAW	ROLL	•
34P	**-1028**	**+280**	**-238**	**18**	**298**	**7**	
35	-1007	+255	-238	18	299	9	
36P	**-924**	**+228**	**-241**	**21**	**302**	**14**	

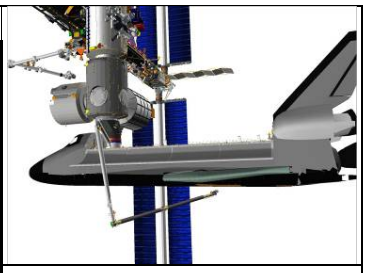

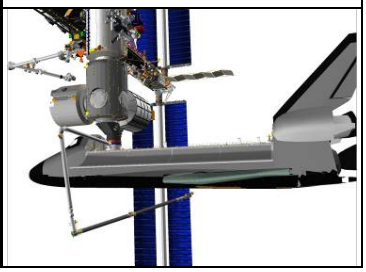

When AUTO SEQ READY lt – on:

A7U PAN/TILT to match LDRI view shown below

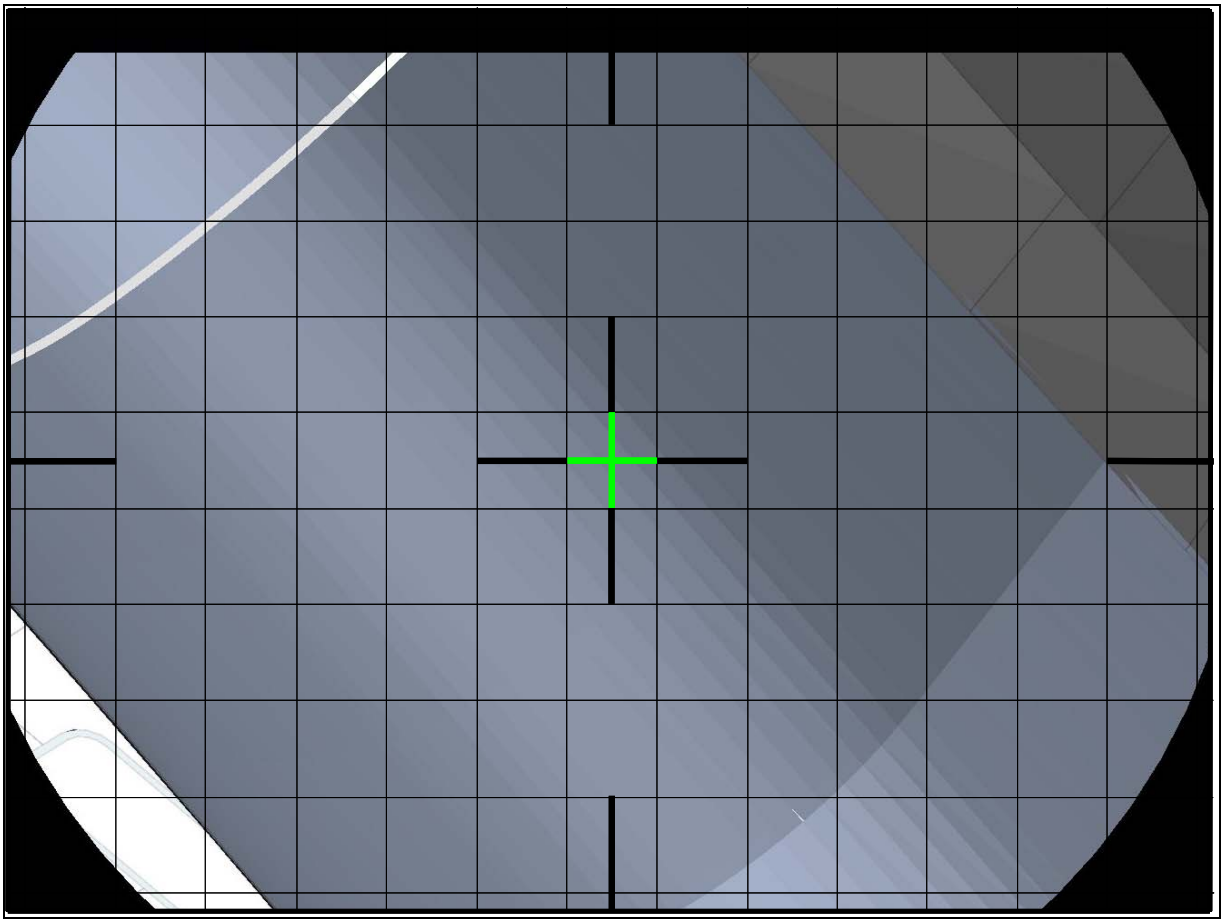

LDRI: +30 (right), -65 (up)

√MCC to verify correct sensor view

Note PAN/TILT: _____, _____

A7U √DTV ← PL2
VID OUT – not DTV
VID IN – not PL2

NOTE
Time between Pts 36 & 37 ~ 0:40 min

AUTO SEQ – PROCEED (IN PROG lt on)

Pt	X	Y	Z	PITCH	YAW	ROLL	●	
36P	**-924**	**+228**	**-241**	**21**	**302**	**14**		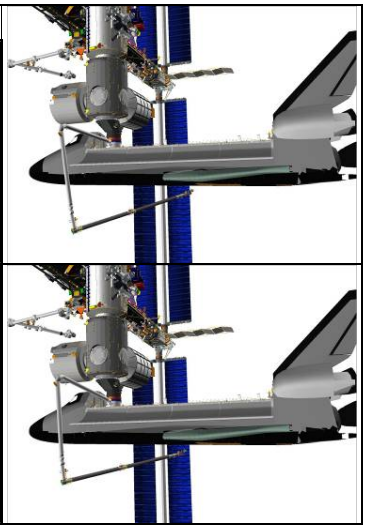
37P	**-892**	**+222**	**-235**	**15**	**301**	**11**		

When AUTO SEQ READY lt – on:
L10(VTR) STOP pb – push (no red ●)

13. STBD LDRI ACAS, SECTION 7

NOTE
Between Pts 37 & 38, arm adjusts for survey of Zone 3.
Section 7 scans Zone 3, Panels 1 → 9. Time between
Pts 37 & 38 ~ 1:50 min

Section 7 Clearance Views	Cameras
LOWER ARM-to-PLBD	A, B, ELBOW, P1 LOOB
OBSS-to-ORBITER	RSC

AUTO SEQ – PROCEED (IN PROG lt on)

Pt	X	Y	Z	PITCH	YAW	ROLL	•	
37P	**-892**	**+222**	**-235**	**15**	**301**	**11**		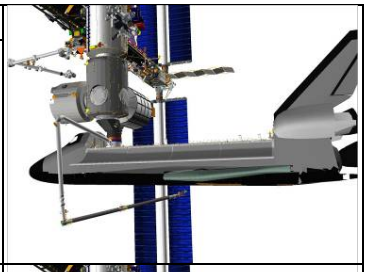
38P	**-903**	**+241**	**-246**	**67**	**288**	**61**		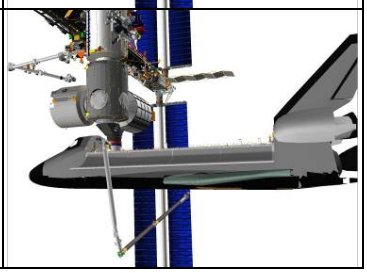

When AUTO SEQ READY lt – on:

A7U PAN/TILT to match LDRI view shown below

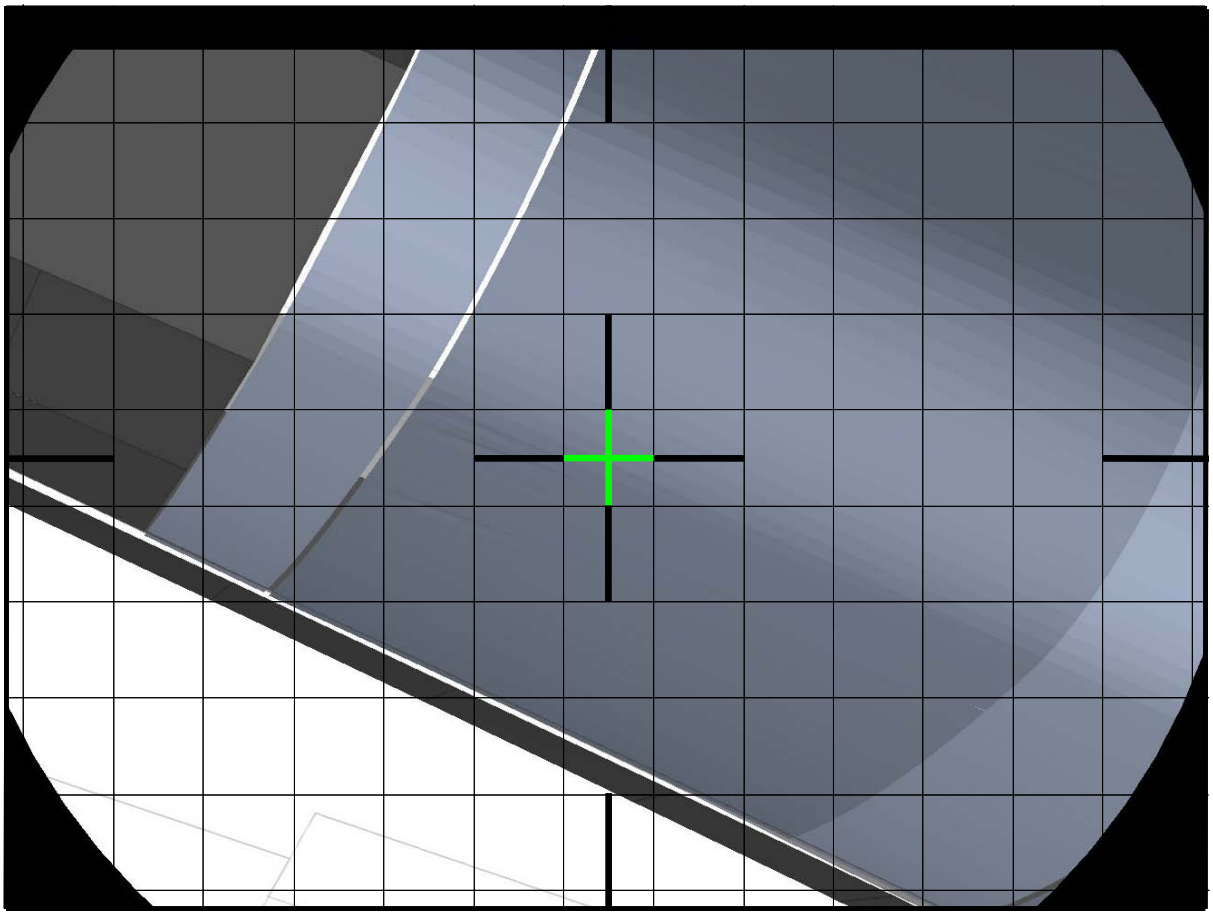

LDRI: +47 (right), -49 (up)

√MCC to verify correct sensor view
Note PAN/TILT: _____, _____

A7U √DTV ← PL2
VID OUT – not DTV
VID IN – not PL2

NOTE

Time between Pts 38 & 39 ~ 1:00 min

L10(VTR) REC pb – push, hold
PLAY pb – push, simo (red ●)

AUTO SEQ – PROCEED (IN PROG lt on)

Pt	X	Y	Z	PITCH	YAW	ROLL	●	
38P	**-903**	**+241**	**-246**	**67**	**288**	**61**		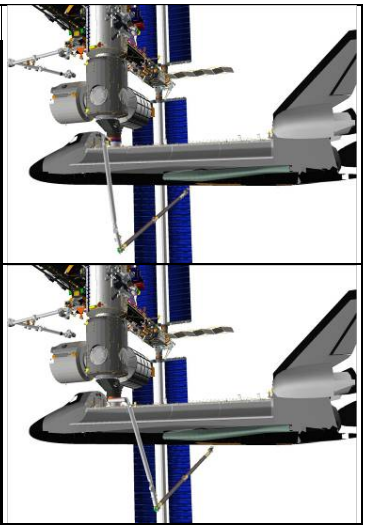
39P	**-1008**	**+276**	**-246**	**67**	**288**	**61**		

When AUTO SEQ READY lt – on:

A7U PAN/TILT to match LDRI view shown below

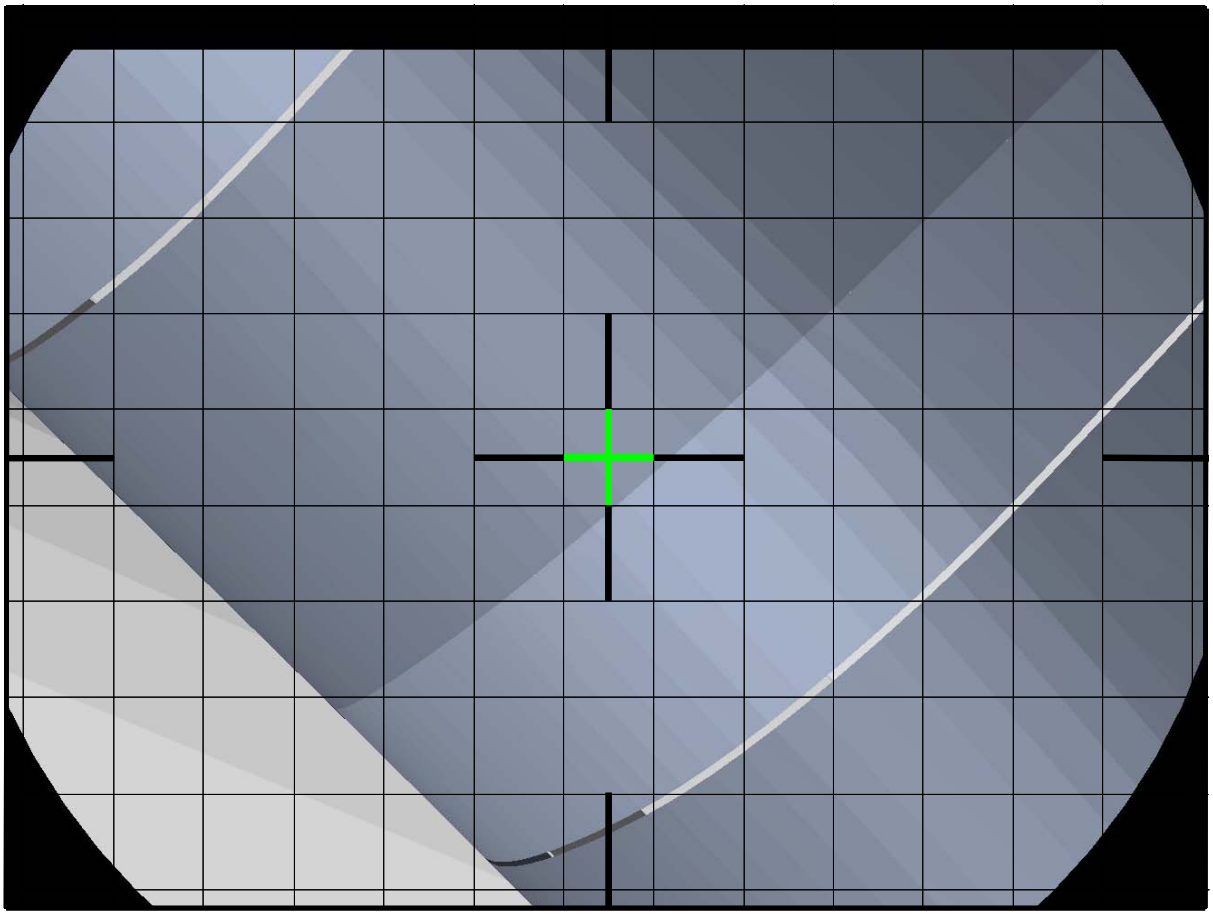

LDRI: +34 (left), -57 (down)

√MCC to verify correct sensor view
Note PAN/TILT: _____, _____

A7U √DTV ← PL2
VID OUT – not DTV
VID IN – not PL2

NOTE
Time between Pts 39 and 40 ~ 0:40 min. At Pt 40, Lower Arm-to-PLBD = 51 in. Monitor clearance with Elbow camera (-30, -30)

AUTO SEQ – PROCEED (IN PROG lt on)

Pt	X	Y	Z	PITCH	YAW	ROLL	●	
39P	**-1008**	**+276**	**-246**	**67**	**288**	**61**		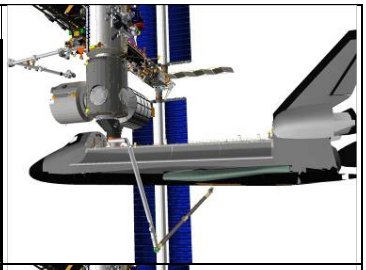
40P	**-1044**	**+306**	**-248**	**67**	**288**	**61**		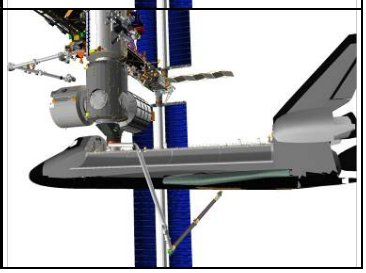

When AUTO SEQ READY lt – on:
L10(VTR) STOP pb – push (no red ●)

A7U VIDEO OUT MUX 1 L pb – push (MIDDECK lt on)
LDRI MODE 2 pb – push (ITVC video displayed)

√VIDEO OUT – not DTV
√VIDEO IN – not PL2

14. MNVR TO STBD END POSN

NOTE
Between Pts 40 and 42, arm adjusts for mnvr to Nose Cap survey start posn. Time between Pts 40 and 42 ~ 1:50 min

Section 7 Clearance Views	Cameras
LOWER ARM-to-PLBD	A, B, ELBOW, P1 LOOB
OBSS-to-ORBITER	RSC

AUTO SEQ – PROCEED (IN PROG lt on)

Pt	X	Y	Z	PITCH	YAW	ROLL	•	
40P	**-1044**	**+306**	**-248**	**67**	**288**	**61**		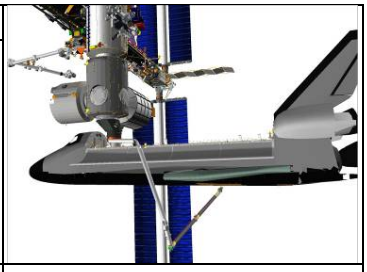
41	-1060	+310	-194	56	284	42		
42P	**-724**	**-414**	**+123**	**275**	**333**	**271**		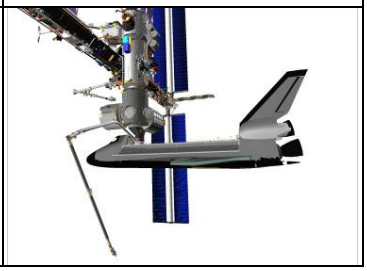

When AUTO SEQ IN PROG lt – off:
BRAKES – ON (tb-ON)

WARNING
Port PLBD radiator must be stowed

1. SETUP

SM 94 PDRS CONTROL

√PL ID, ITEM 3: 2
√INIT ID, ITEM 24: 2

	X	Y	Z	PITCH	YAW	ROLL	PL ID
√	-724	-414	+123	275	333	271	2
	SY	SP	EP	WP	WY	WR	
√	+90.4	+37.9	-36.7	-8.7	-1.7	-155.6	

2. INHIBIT NOSE JETS

A6U √DAP: FREE

NOTE
Expect DAP RECONFIG message after FRCS manifold 5 status overridden to close

GNC 23 RCS

RCS FWD – ITEM 1 EXEC (*)
MANF VLVS OVRD 1 – ITEM 40 EXEC (CL)
2 – ITEM 41 EXEC (CL)
3 – ITEM 42 EXEC (CL)
4 – ITEM 43 EXEC (CL)
5 – ITEM 44 EXEC (CL)

3. MNVR TO NOSE CAP LDRI ACAS START POSN

RHC RATE – COARSE (RATE MIN tb-OFF)

SM 94 PDRS CONTROL

√AUTO MODE 3, ITEM 15: 3

BRAKES – OFF (tb-OFF)
MODE – AUTO 3, ENTER (READY lt on)

* If unable to enter AUTO mode (no AUTO READY lt): *
* √Joint angles and adjust as reqd *

SM 94 PDRS CONTROL

√START PT, ITEM 17: 43

SM 169 PDRS STATUS

Monitor ACAS progress

NOTE
Sequence run time ~ 6:20 min

Section 1 Clearance Views	Cameras
OBSS-to-Nose Cap	RSC[1], P1 LOOB[1], US LAB
[1]Good for all subsequent scan sections	

AUTO SEQ – PROCEED (IN PROG lt on)

ACAS, pause pts **shaded in bold**, ● col indicates data recording (black = VTR on)

Pt	X	Y	Z	PITCH	YAW	ROLL	●	
43P	**-724**	**-414**	**+123**	**275**	**333**	**271**		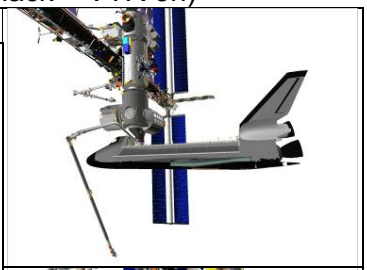
44	-122	+9	-155	259	313	314		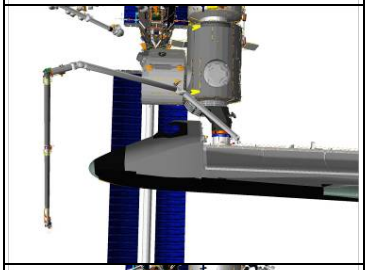
45	-123	+73	-341	251	307	312		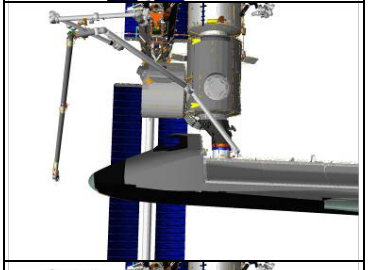
46P	**-187**	**+98**	**-348**	**260**	**303**	**315**		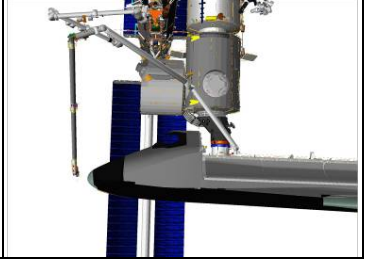

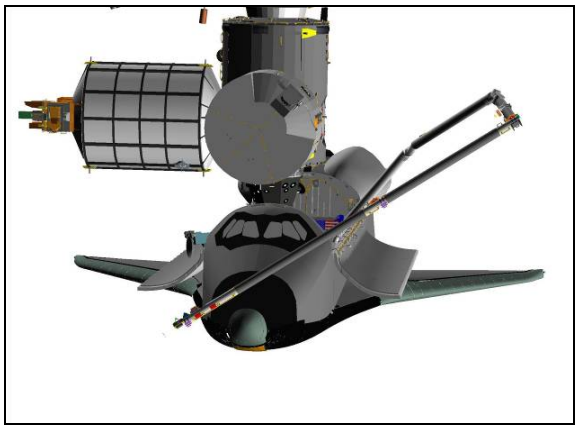

FRONT

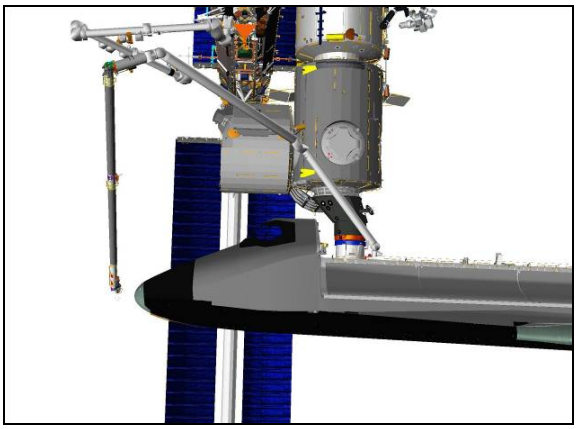

PORT

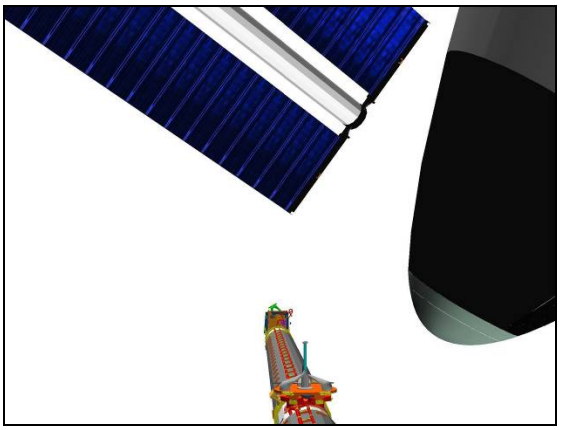

RSC

4. <u>NOSE CAP LDRI ACAS, SECTION 1</u>

A7U VIDEO OUT MUX 1 L pb – push (MIDDECK lt on)
LDRI MODE 6 pb – push (flickering LDRI displayed)

A7U PAN/TILT to match LDRI view shown below

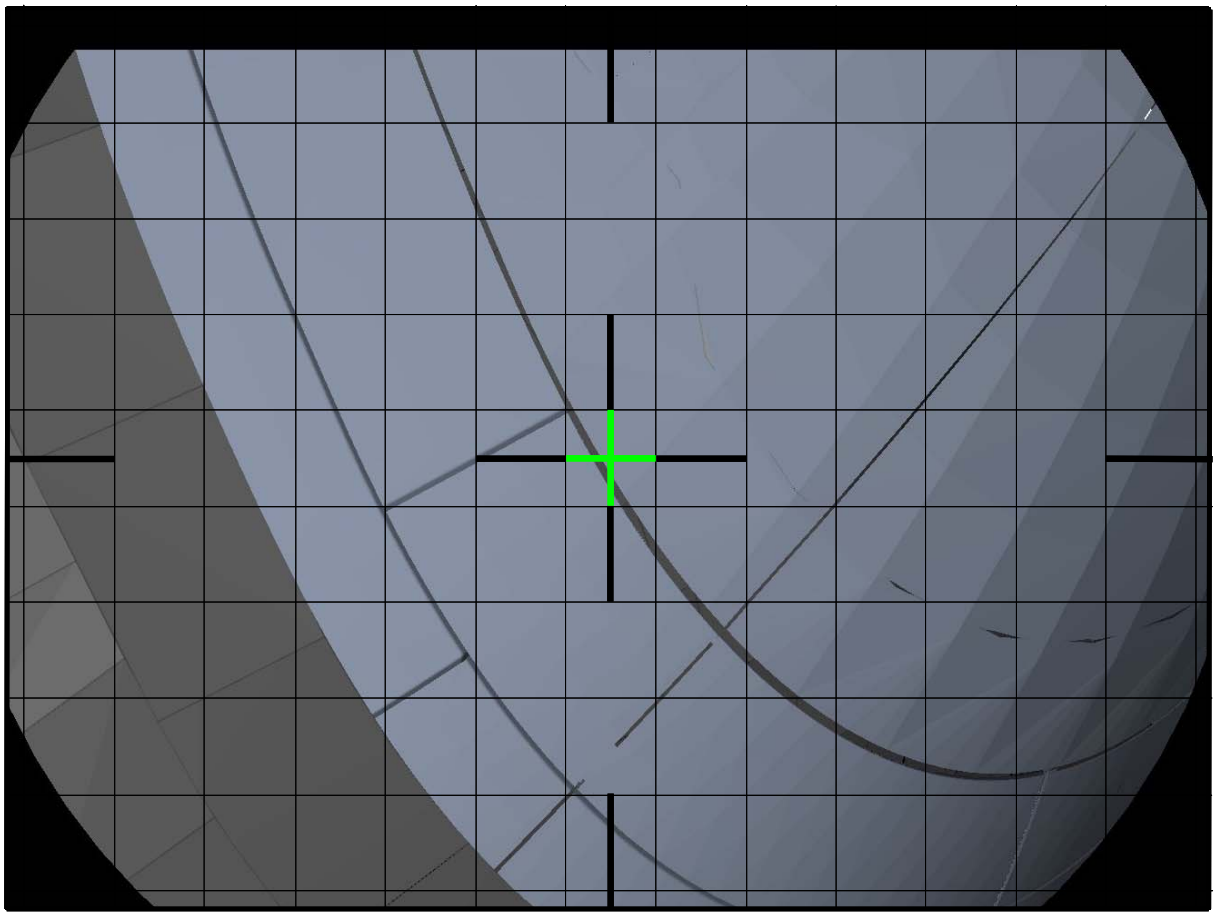

LDRI: 0 (left), -45 (up)

√MCC to verify correct sensor view
Note PAN/TILT: _____, _____

A7U √DTV ← PL2
VID OUT – not DTV
VID IN – not PL2

For survey scan pattern, refer to <u>OBSS LDRI SCAN PATTERN CUE CARD – DOCKED NOSE CAP</u> (<u>CUE CARD CONFIGURATION</u>)

RHC √RATE – COARSE (RATE MIN tb-OFF)

SM 169 PDRS STATUS
Monitor ACAS progress

<u>NOTE</u>
Section 1 run time ~ 2:15 min

Section 1 Clearance Views	Cameras
OBSS-to-Nose Cap	US LAB

L10(VTR) REC pb – push, hold
PLAY pb – push, simo (red ●)

AUTO SEQ – PROCEED (IN PROG lt on)

Pt	X	Y	Z	PITCH	YAW	ROLL	●	
46P	**-187**	**+98**	**-348**	**260**	**303**	**315**		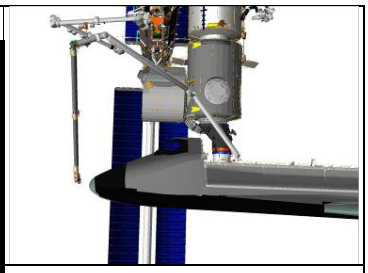
47	-160	+58	-371	221	302	274		
48P	**-177**	**+71**	**-381**	**227**	**305**	**291**		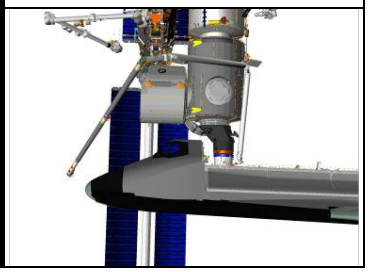

When AUTO SEQ READY lt – on:

L10(VTR) STOP pb – push (no red ●)

5. <u>NOSE CAP LDRI ACAS, SECTION 2</u>

<u>NOTE</u>

Time between Pts 48 and 50 ~ 3:20 min

Section 2 Clearance Views	Cameras
RMS-to-PLBD	A, ELBOW
OBSS-to-Nose Cap	ELBOW[1], US LAB
[1]Good after Y ~ 57	

AUTO SEQ – PROCEED (IN PROG lt on)

Pt	X	Y	Z	PITCH	YAW	ROLL	●	
48P	**-177**	**+71**	**-381**	**227**	**305**	**291**		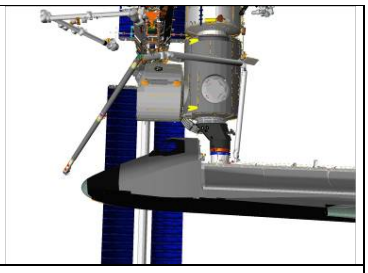
49	-185	+27	-425	191	297	287		
50P	**-181**	**+27**	**-403**	**154**	**289**	**281**		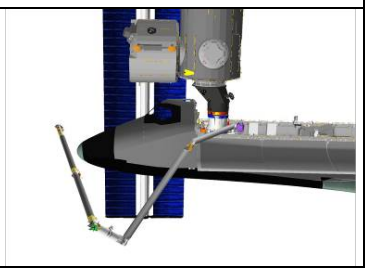

When AUTO SEQ READY lt – on:

A7U PAN/TILT to match LDRI view shown below

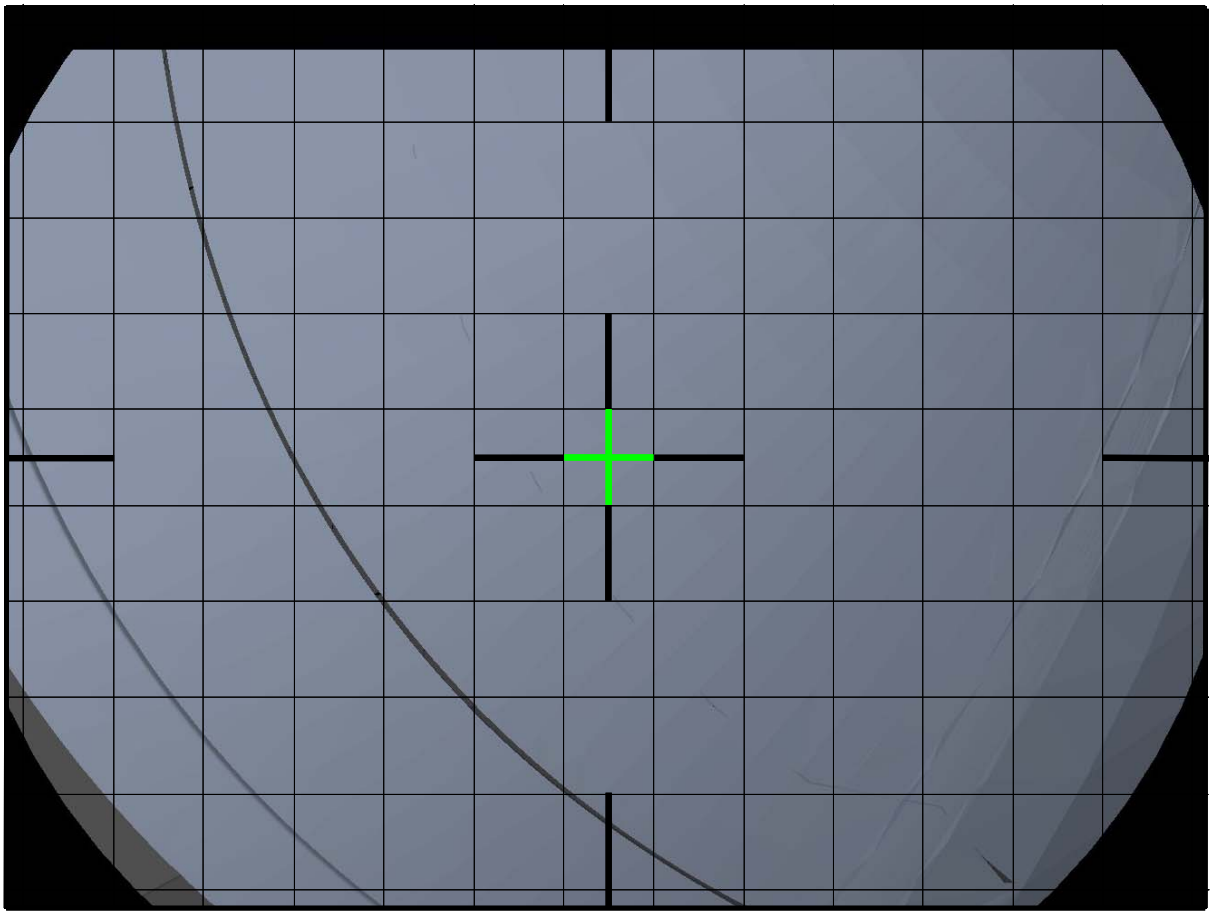

LDRI: 75 (right), -55 (down)

√MCC to verify correct sensor view
Note PAN/TILT: _____, _____

A7U √DTV ← PL2
VID OUT – not DTV
VID IN – not PL2

NOTE

Time between Pts 50 and 55 ~ 6:20 min

L10(VTR) REC pb – push, hold
PLAY pb – push, simo (red ●)

AUTO SEQ – PROCEED (IN PROG lt on)

Pt	X	Y	Z	PITCH	YAW	ROLL	●	
50P	**-181**	**+27**	**-403**	**154**	**289**	**281**		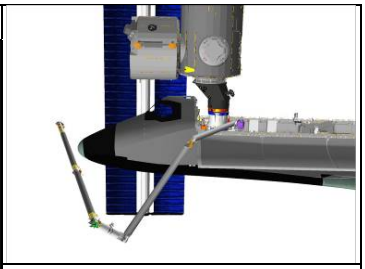
51	-182	+7	-414	146	296	273		
52	-177	+31	-385	220	296	348		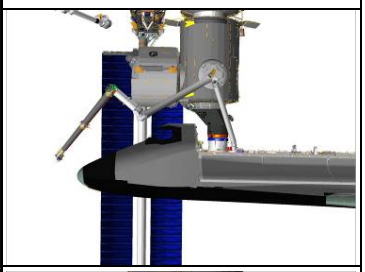
53	-184	-26	-423	148	309	281		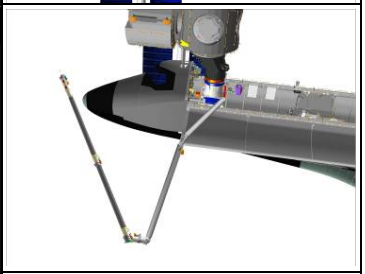
54	-170	-65	-369	173	327	275		
55P	**-148**	**-12**	**-332**	**169**	**306**	**250**		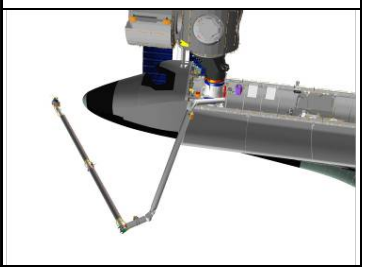

When AUTO SEQ READY lt – on:

L10(VTR) STOP pb – push (no red ●)

A7U PAN/TILT to match LDRI view shown below

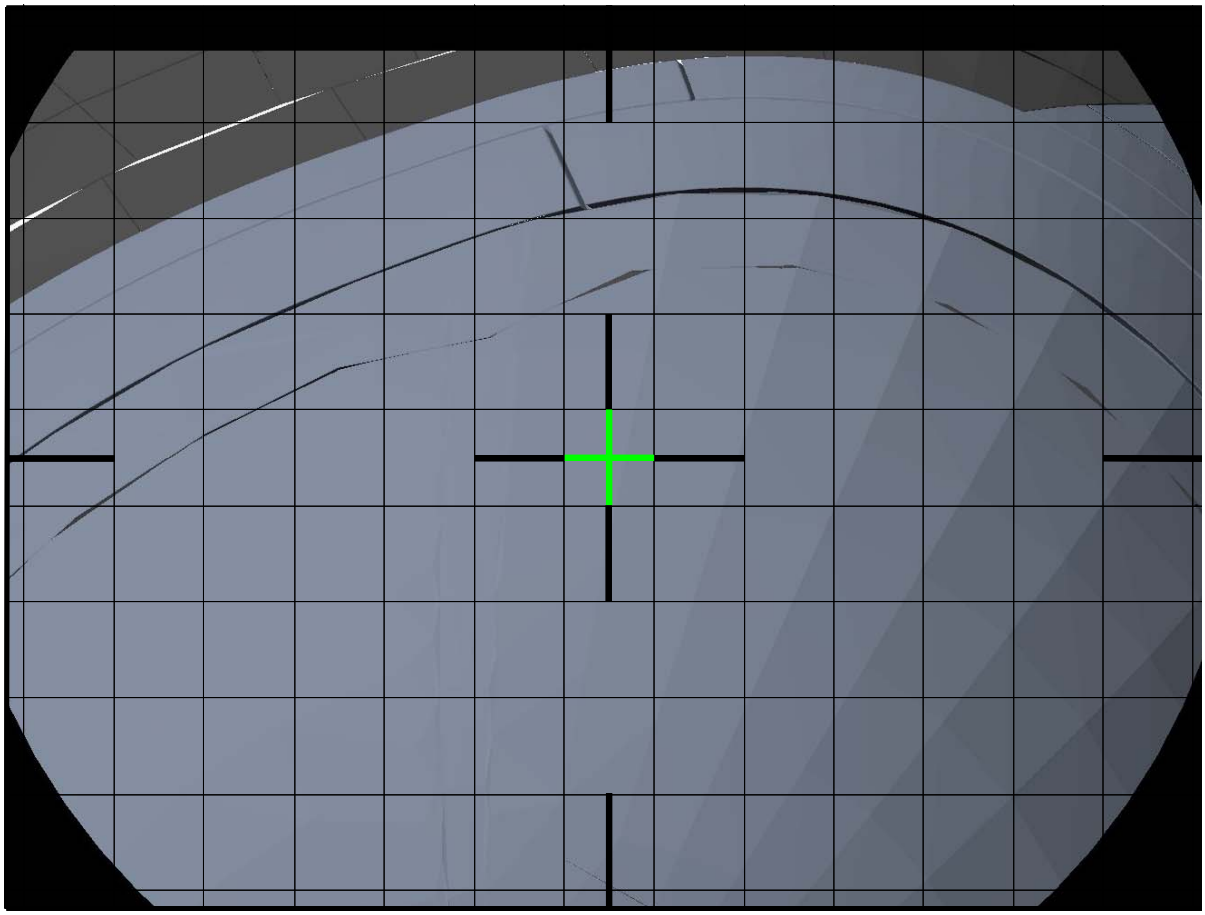

LDRI: 75 , -43 (up)

√MCC to verify correct sensor view
Note PAN/TILT: _____, _____

A7U √DTV ← PL2
VID OUT – not DTV
VID IN – not PL2

6. NOSE CAP LDRI ACAS, SECTION 3

NOTE
Time between Pts 55 and 56 ~ 2:00 min

Section 3 Clearance Views	Cameras
RMS-to-PLBD	A, ELBOW
OBSS-to-Nose Cap	ELBOW[1], US LAB[2]
[1]Good until Z ~ -290 [2]Good until Z ~ -292	

AUTO SEQ – PROCEED (IN PROG lt on)

Pt	X	Y	Z	PITCH	YAW	ROLL	●	
55P	**-148**	**-12**	**-332**	**169**	**306**	**250**		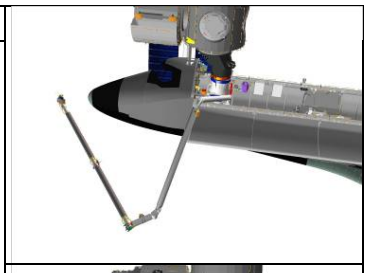
56P	**-155**	**+38**	**-300**	**233**	**297**	**309**		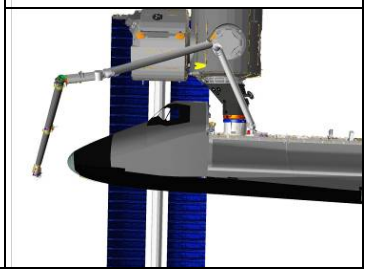

When AUTO SEQ READY lt – on:

L10(VTR) REC pb – push, hold
PLAY pb – push, simo (red ●)

NOTE

Time between Pts 56 and 58 ~ 2:55 min

AUTO SEQ – PROCEED (IN PROG lt on)

Pt	X	Y	Z	PITCH	YAW	ROLL	●	
56P	**-155**	**+38**	**-300**	**233**	**297**	**309**		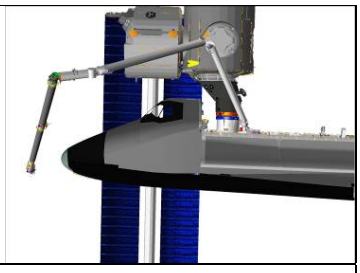
57	-183	+70	-273	184	282	237		
58P	**-209**	**+27**	**-228**	**238**	**298**	**266**		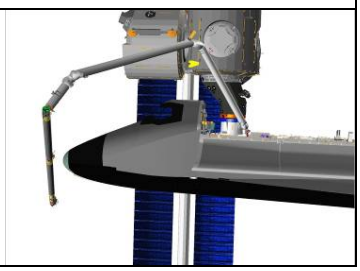

When AUTO SEQ READY lt – on:

L10(VTR) STOP pb – push (no red ●)

7. NOSE CAP LDRI ACAS, SECTION 4

NOTE

Time between Pts 58 and 59 ~ 1:20 min

Section 4 Clearance Views	Cameras
RMS-to-PLBD	A, ELBOW
OBSS-to-Nose Cap	ELBOW[1][2]
[1]Good after Y ~ 6	[2]Good until Y ~ -12

AUTO SEQ – PROCEED (IN PROG lt on)

Pt	X	Y	Z	PITCH	YAW	ROLL	•	
58P	**-209**	**+27**	**-228**	**238**	**298**	**266**		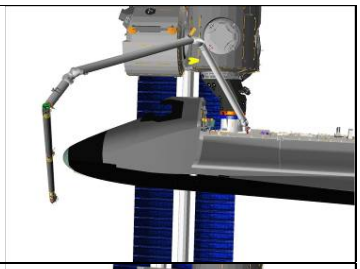
59P	**-236**	**0**	**-234**	**217**	**287**	**242**		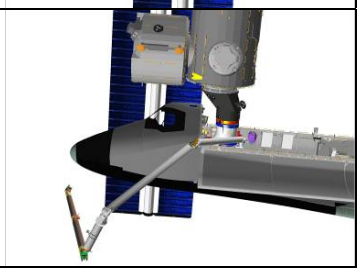

When AUTO SEQ READY lt – on:

A7U PAN/TILT to match LDRI view shown below

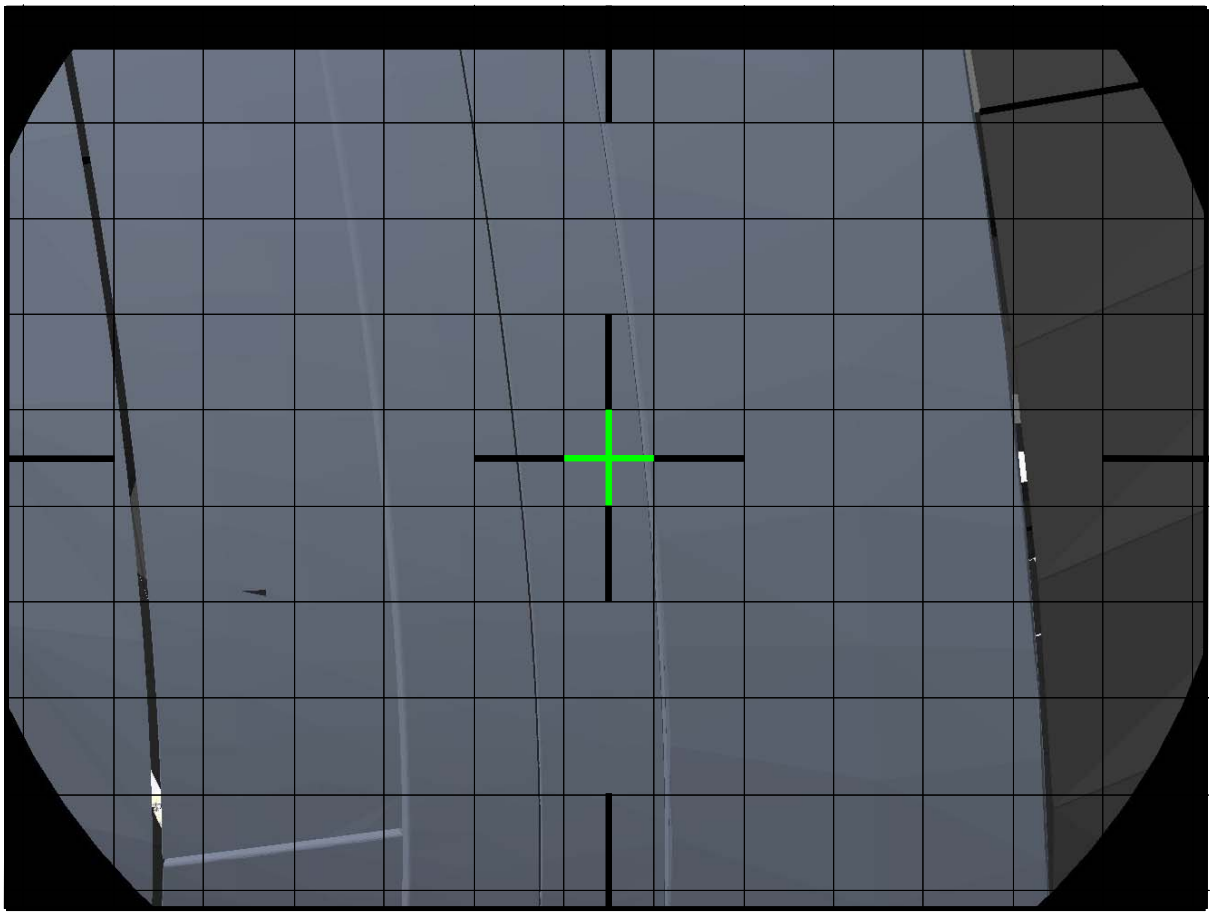

LDRI: 85 (right), -73 (down)

√MCC to verify correct sensor view
Note PAN/TILT: _____, _____

A7U √DTV ← PL2
VID OUT – not DTV
VID IN – not PL2

NOTE
Time between Pts 59 and 61 ~ 2:25 min

L10(VTR) REC pb – push, hold
PLAY pb – push, simo (red ●)

AUTO SEQ – PROCEED (IN PROG lt on)

Pt	X	Y	Z	PITCH	YAW	ROLL	●	
59P	**-236**	**0**	**-234**	**217**	**287**	**242**		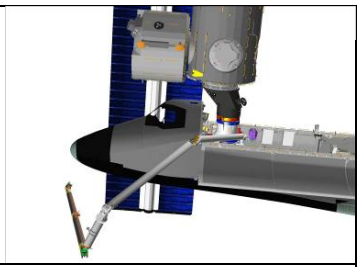
60	-235	-35	-244	238	298	267		
61P	**-232**	**-67**	**-249**	**222**	**312**	**257**		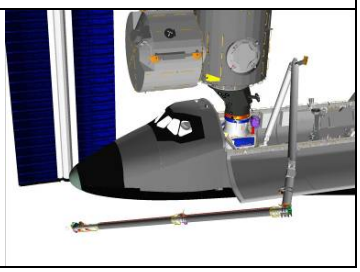

When AUTO SEQ READY lt – on:
L10(VTR) STOP pb – push (no red ●)

8. NOSE CAP LDRI ACAS, SECTION 5

NOTE
Time between Pts 61 and 62 ~ 1:15 min

Section 5 Clearance Views	Cameras
RMS-to-PLBD	A, ELBOW
OBSS-to-Nose Cap	ELBOW[1]
RMS-to-NODE 2	A, B
[1]Good after Z ~ -297	

AUTO SEQ – PROCEED (IN PROG lt on)

Pt	X	Y	Z	PITCH	YAW	ROLL	•	
61P	-232	-67	-249	222	312	257		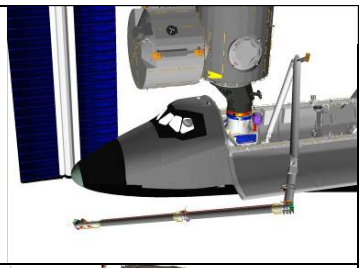
62P	-191	-58	-267	234	322	268		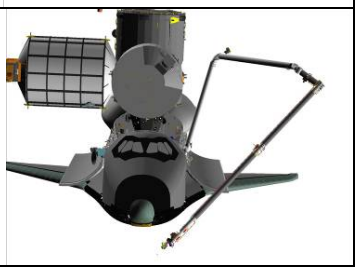

When AUTO SEQ READY lt – on:

A7U PAN/TILT to match LDRI view shown below

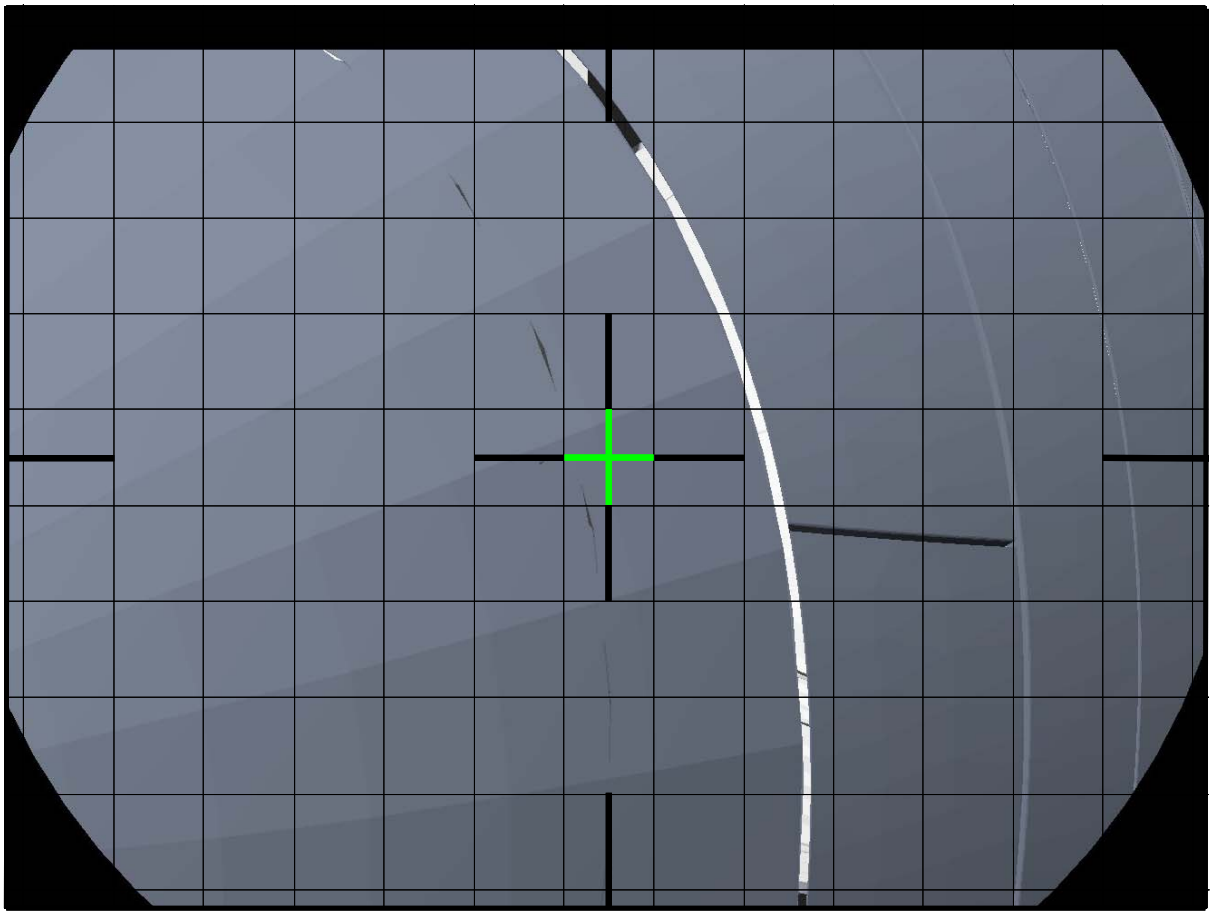

LDRI: 65 (left), -58 (up)

√MCC to verify correct sensor view

Note PAN/TILT: _____, _____

A7U √DTV ← PL2
VID OUT – not DTV
VID IN – not PL2

NOTE
Minimum clearance RMS-to-NODE 2 = 44 in between pts 64-65.
Clearance can be monitored with camera B. Time between
Pts 62 and 65 ~ 4:00 min

L10(VTR) REC pb – push, hold
PLAY pb – push, simo (red ●)

AUTO SEQ – PROCEED (IN PROG lt on)

Pt	X	Y	Z	PITCH	YAW	ROLL	●	
62P	**-191**	**-58**	**-267**	**234**	**322**	**268**		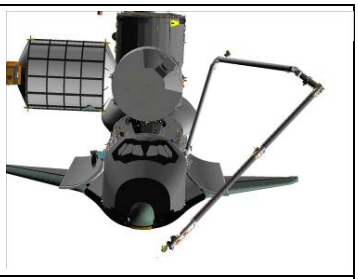
63	-168	-13	-270	214	303	256		
64	-161	-40	-287	231	317	283		
65P	**-166**	**-60**	**-348**	**189**	**326**	**271**		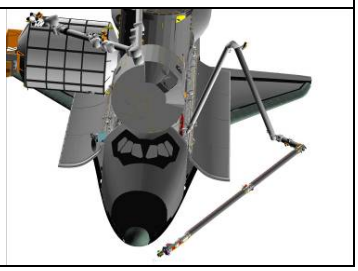

When AUTO SEQ READY lt – on:
L10(VTR) STOP pb – push (no red ●)

9. NOSE CAP LDRI ACAS, SECTION 6

NOTE
Time between Pts 65 and 66 ~ 1:00 min

Section 6 Clearance Views	Cameras
RMS-to-PLBD	A, ELBOW
OBSS-to-Nose Cap	ELBOW, US LAB[1]
RMS-to-NODE 2	A, B
[1]Good until Y ~ -80	

AUTO SEQ – PROCEED (IN PROG lt on)

Pt	X	Y	Z	PITCH	YAW	ROLL	•	
65P	-166	-60	-348	189	326	271		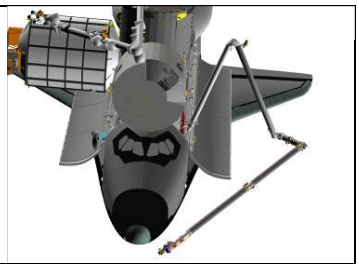
66P	-179	-70	-381	185	316	280		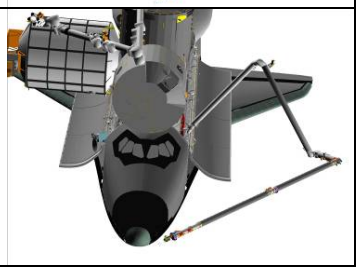

When AUTO SEQ READY lt – on:

A7U PAN/TILT to match LDRI view shown below

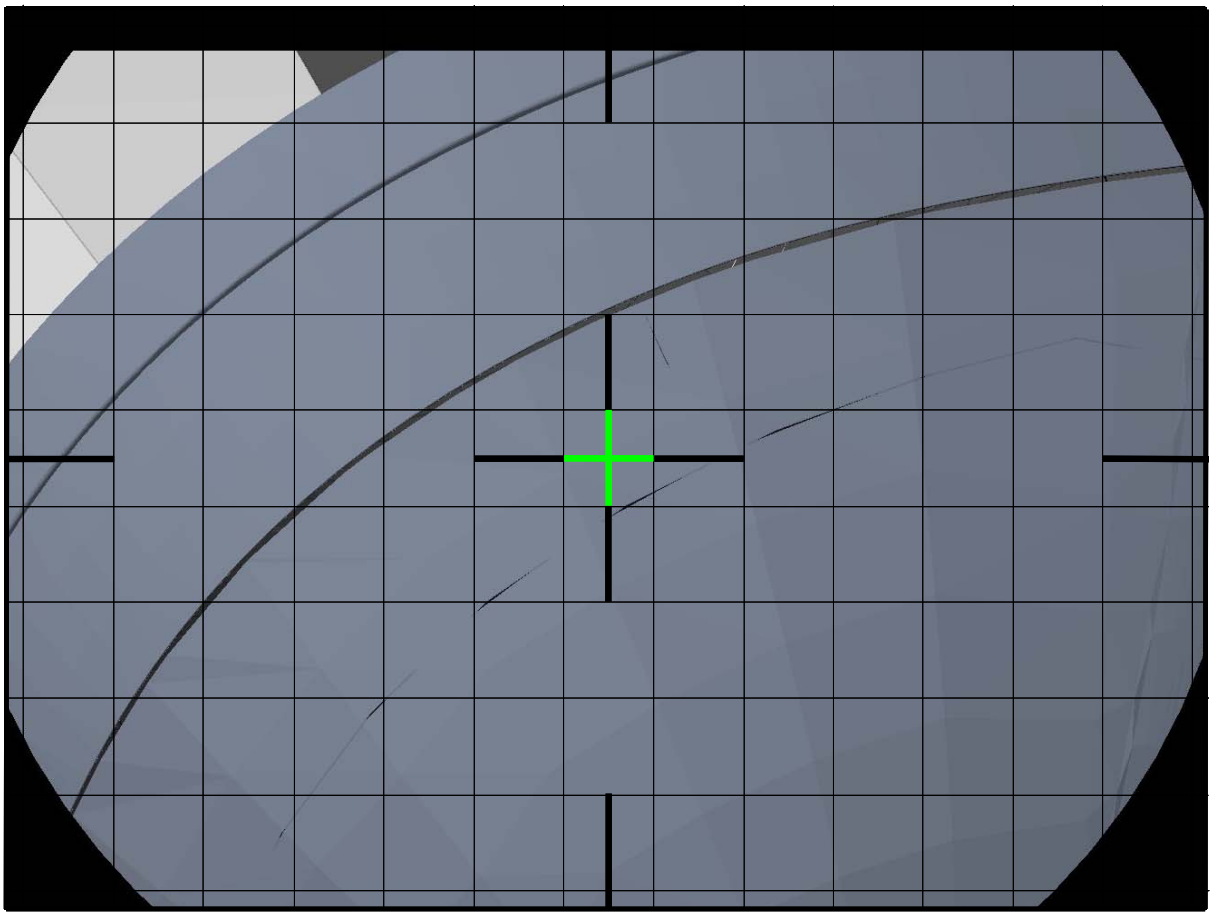

LDRI: 65, -75 (down)

√MCC to verify correct sensor view

Note PAN/TILT: _____, _____

A7U √DTV ← PL2
VID OUT – not DTV
VID IN – not PL2

NOTE

Minimum clearance RMS-to-NODE 2 = 49 in between pts 66-67. Clearance can be monitored with camera B. Time between Pts 66 and 67 ~ 1:50 min

L10(VTR) REC pb – push, hold
PLAY pb – push, simo (red ●)

AUTO SEQ – PROCEED (IN PROG lt on)

Pt	X	Y	Z	PITCH	YAW	ROLL	●	
66P	**-179**	**-70**	**-381**	**185**	**316**	**280**		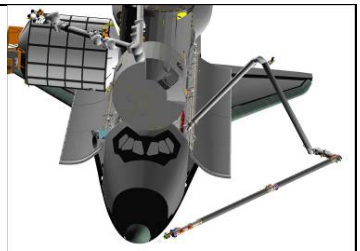
67P	**-196**	**-80**	**-306**	**221**	**320**	**274**		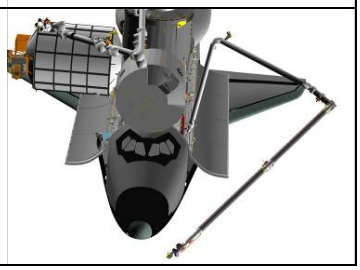

When AUTO SEQ READY lt – on:
L10(VTR) STOP pb – push (no red ●)

A7U VIDEO OUT MUX 1 L pb – push (MIDDECK lt on)
LDRI MODE 2 pb – push (ITVC video displayed)

√VIDEO OUT – not DTV
√VIDEO IN – not PL2

10. MNVR TO PORT WING START

NOTE

Time between Pts 67 and 70 ~ 12:35 min

Port Wing Start Mnvr Views	Cameras
RMS-to-PLBD	A, ELBOW
OBSS-to-ISS	B
OBSS-to-PLBD	A, ELBOW, RSC
RMS-to-Node 2	A, B

AUTO SEQ – PROCEED (IN PROG lt on)

Pt	X	Y	Z	PITCH	YAW	ROLL	•	
67P	**-196**	**-80**	**-306**	**221**	**320**	**274**		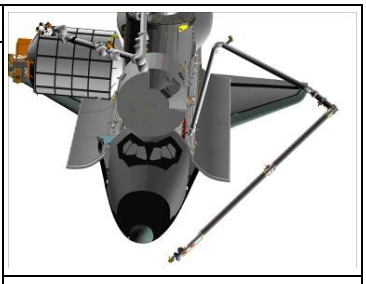
68	-380	-158	-91	262	321	284		
69	-528	-119	-98	293	325	290		
70P	**-899**	**-243**	**-284**	**2**	**341**	**289**		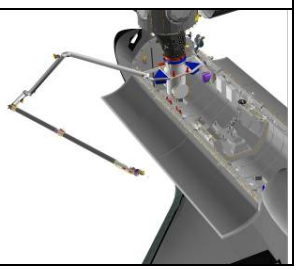

When AUTO SEQ IN PROG lt – off:
BRAKES – ON (tb-ON)

	X	Y	Z	PITCH	YAW	ROLL	PL ID
√	-899	-243	-284	2	341	289	2
	SY	SP	EP	WP	WY	WR	
√	+138.9	+24.6	-61.2	+36.7	-67.5	-74.4	

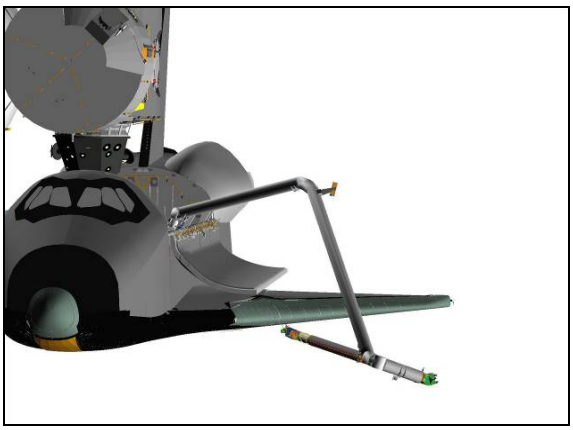

FRONT

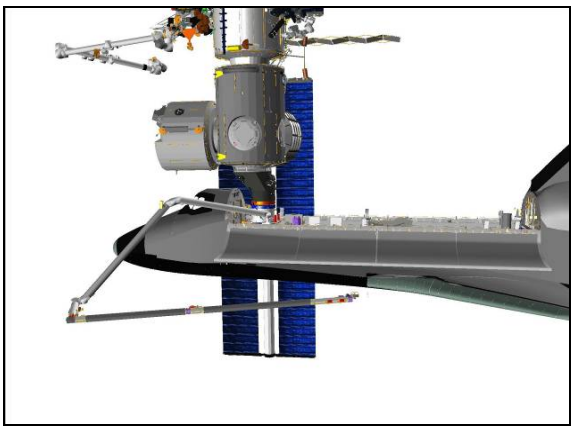

PORT

11. <u>ENABLE VERN NOSE JETS</u>

GNC 23 RCS

RCS FWD – ITEM 1 EXEC (*)
MANF VLVS OVRD 5 – ITEM 44 EXEC (OP)

If Orbiter Control required:
A6U √DAP: VERN
DAP: LVLH
When rates damped:
DAP: FREE > 2 sec
DAP: AUTO

WARNING
Port PLBD radiator must be stowed

1. SETUP

SM 94 PDRS CONTROL

√PL ID, ITEM 3: 2

√INIT ID, ITEM 24: 2

	X	Y	Z	PITCH	YAW	ROLL	PL ID
√	-899	-243	-284	2	341	289	2
	SY	SP	EP	WP	WY	WR	
√	+138.9	+24.6	-61.2	+36.7	-67.5	-74.4	

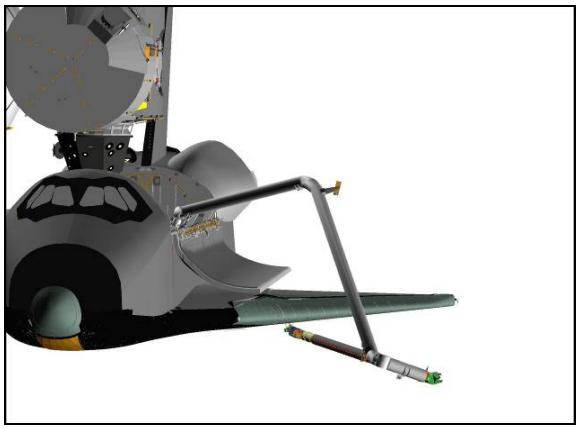

FRONT

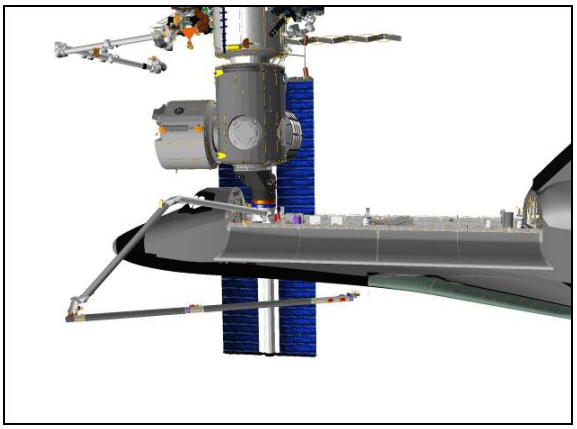

PORT

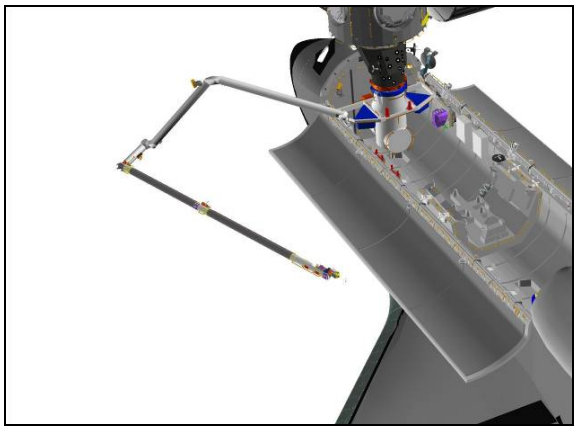

BIRD'S EYE

2. PORT LDRI ACAS, SECTION 1

NOTE

Section 1 scans RCC Zones 2 & 3 (oblique view), Panels 1 → 22

A7U MUX 1 L ← MIDDECK
DTV ← PL2

LDRI MODE 6 pb – push (flickering LDRI displayed)

A7U PAN/TILT to match LDRI view shown below

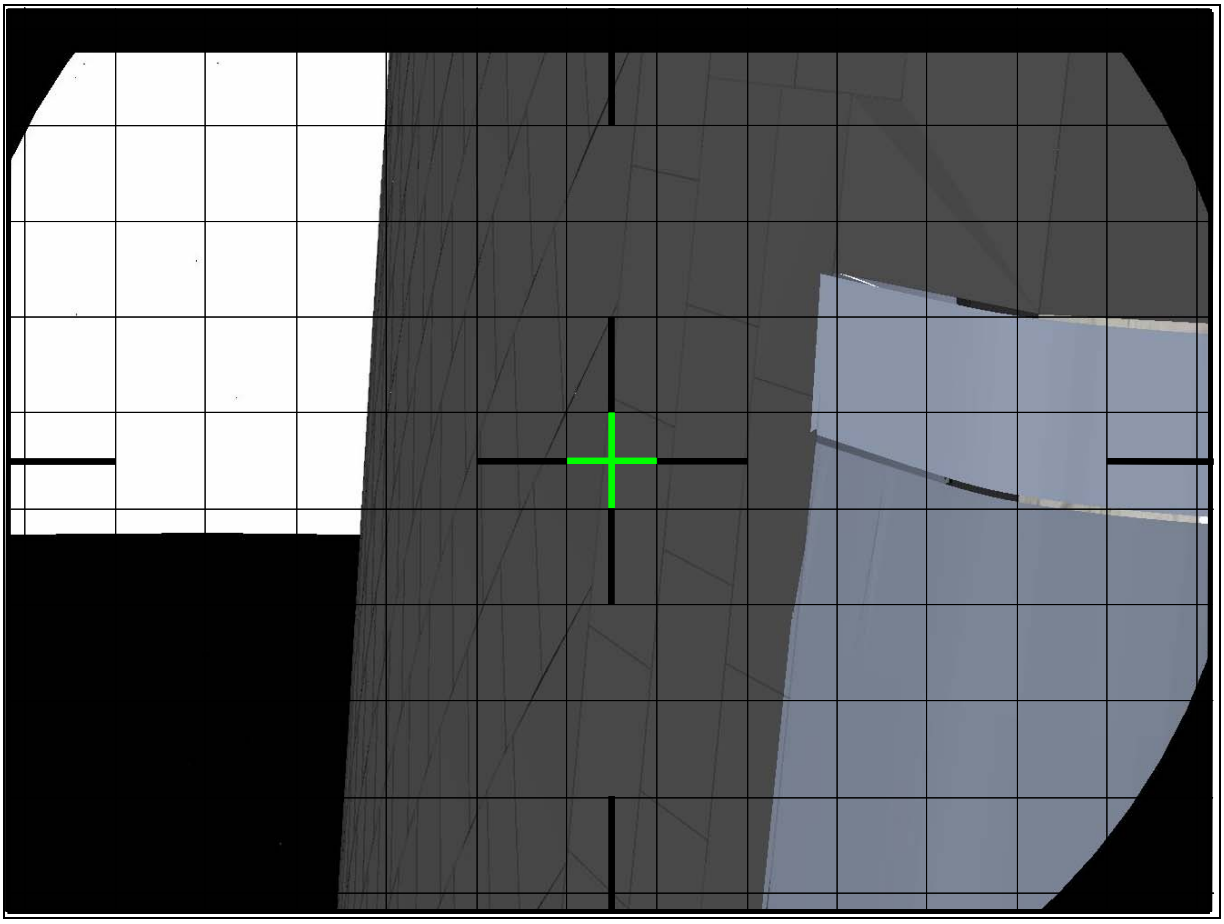

LDRI: 100 (right), -120 (down)

√MCC to verify correct sensor view
Note PAN/TILT: _____, _____

A7U √DTV ← PL2
VID OUT – not DTV
VID IN – not PL2

For survey scan pattern, refer to OBSS LDRI SCAN PATTERN CUE CARD – DOCKED STBD & PORT

When in attitude and on CMG-MM:

PCS MSS: SSRMS: Thrusters: Thruster Controls for MSS Ops
Verify 'Desat Request' Inhibit

RHC √RATE – COARSE (RATE MIN tb-OFF)

SM 94 PDRS CONTROL
√AUTO MODE 4, ITEM 16: 4

BRAKES – OFF (tb-OFF)
MODE – AUTO 4, ENTER (READY lt on)

* If unable to enter AUTO mode (no AUTO READY lt) *
* √Joint angles and adjust as reqd *

SM 94 PDRS CONTROL
√START PT, ITEM 17: 71

SM 169 PDRS STATUS
Monitor ACAS progress

NOTE
Time between Pts 71 and 77 ~ 4:45 min

Section 1 Clearance Views	Cameras
RMS Upper Arm-to-Orbiter	A[1]
OBSS-to-PLBD	A[5], B[4], ELBOW, RSC[3]
OBSS-to-Wing	A[5], ELBOW, RSC[2]
[1]Good for all subsequent scan sections [2]Good after X ~ -1050 [3]PLBD leaves FOV at X ~ -1098	[4]Good after X ~ -1099 [5]Good after X ~ -1110

L10(VTR) REC pb – push, hold
PLAY pb – push, simo (red ●)

AUTO SEQ – PROCEED (IN PROG lt on)

ACAS, pause pts **shaded in bold**, ● col indicates data recording (black = VTR on)

Pt	X	Y	Z	PITCH	YAW	ROLL	●	
71P	**-899**	**-243**	**-284**	**2**	**341**	**289**		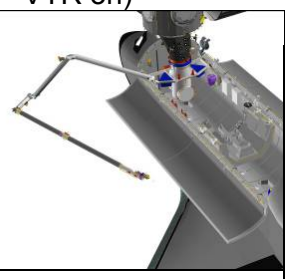
72	-958	-253	-278	2	341	293		
73	-1023	-277	-267	0	353	308		
74	-1057	-310	-267	0	356	307		
75	-1186	-442	-272	0	359	309		
76	-1265	-509	-274	0	350	309		
77P	**-1324**	**-523**	**-274**	**0**	**348**	**315**		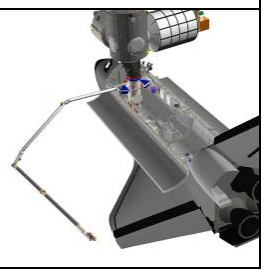

When AUTO SEQ READY lt – on:

L10(VTR) STOP pb – push (no red ●)

3. PORT LDRI ACAS, SECTION 2

NOTE

Between Pts 77 and 78, arm adjusts for survey of Zones 1 & 2. Section 2 then scans RCC Zones 1 & 2, Panels 22 → 1. Time between Pts 77 and 78 ~ 1:50 min

Section 2 Clearance Views	Cameras
OBSS-to-PLBD	A[1], B[3], ELBOW, RSC[2]
OBSS-to-Wing	A[1], ELBOW, RSC
[1]Good until X ~ -1235 [2]PLBD enters FOV at X ~ -1198	[3]Good until X ~ -1157

AUTO SEQ – PROCEED (IN PROG lt on)

Pt	X	Y	Z	PITCH	YAW	ROLL	●	
77P	**-1324**	**-523**	**-274**	**0**	**348**	**315**		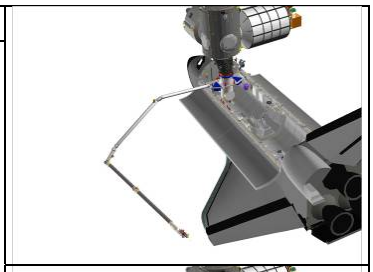
78P	**-1345**	**-496**	**-232**	**345**	**352**	**262**		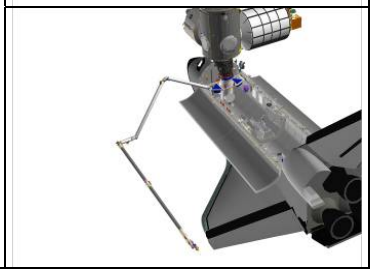

When AUTO SEQ READY lt – on:

A7U PAN/TILT to match LDRI view shown below

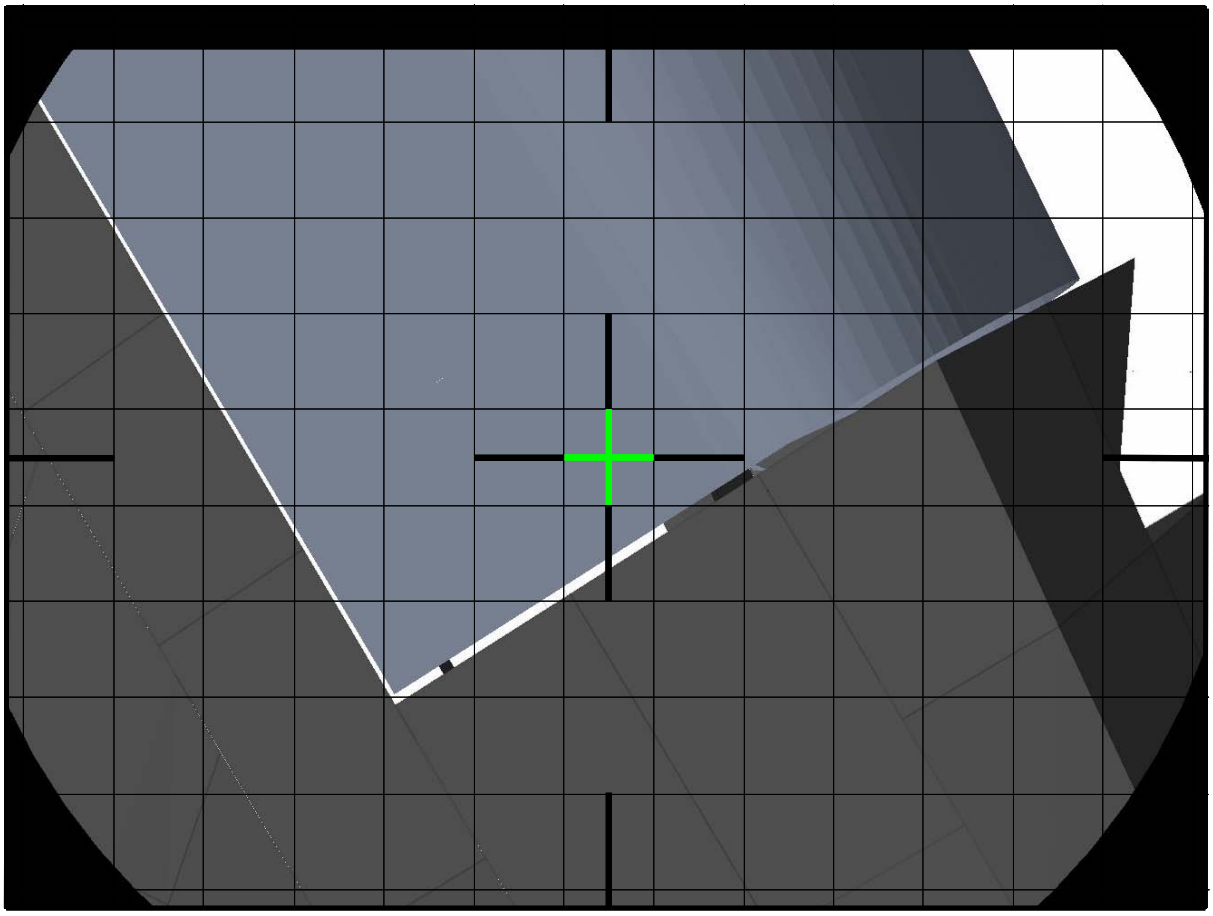

LDRI: 10 (left), -80 (up)

√MCC to verify correct sensor view
Note PAN/TILT: _____, _____

A7U √DTV ← PL2
VID OUT – not DTV
VID IN – not PL2

NOTE

At Pt 87, WP of +110.2° approaches reach limit. Time between Pts 78 and 87 ~ 3:30 min

L10(VTR) REC pb – push, hold
PLAY pb – push, simo (red ●)

AUTO SEQ – PROCEED (IN PROG lt on)

Pt	X	Y	Z	PITCH	YAW	ROLL	●	
78P	**-1345**	**-496**	**-232**	**345**	**352**	**262**		
79	-1268	-456	-230	345	352	262		
80	-1175	-357	-219	345	345	262		
81	-1134	-315	-218	345	345	262		
82	-1097	-277	-214	345	345	262		
83	-1061	-238	-210	345	345	262		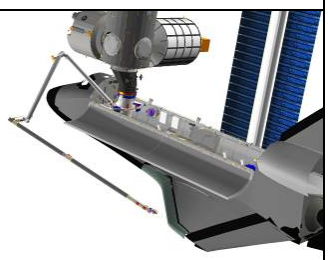
84	-998	-216	-214	345	345	259		
85	-972	-211	-216	345	345	259		
86	-935	-206	-219	345	345	259		
87P	**-906**	**-204**	**-220**	**345**	**345**	**259**		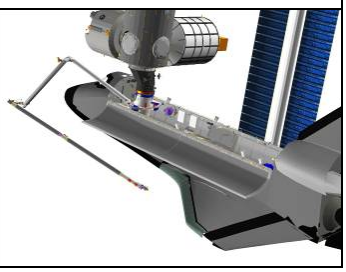

When AUTO SEQ READY lt – on:

L10(VTR) STOP pb – push (no red ●)

4. <u>PORT LDRI ACAS, SECTION 3</u>

<u>NOTE</u>

Between Pts 87 & 88, arm adjusts for survey of Zones 2 & 3. Section 3 then scans Zones 2 & 3, Panels 1 → 22. At Pt 88, WP: +112.4°. Time between Pts 87 and 88 ~ 0:30 sec

Section 3 Clearance Views	Cameras
OBSS-to-PLBD	A[3], B[1], ELBOW, RSC[2]
OBSS-to-Wing	A[3], ELBOW, RSC
[1]Good after X ~ -1128 [2]PLBD leaves FOV at X ~ -1180	[3]Good after X ~ -1187

AUTO SEQ – PROCEED (IN PROG lt on)

Pt	X	Y	Z	PITCH	YAW	ROLL	•	
87P	-906	-204	-220	345	345	259		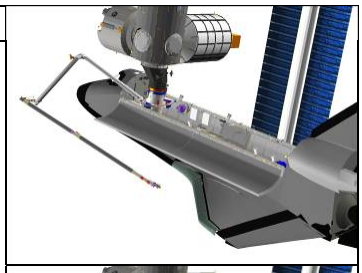
88P	-898	-214	-230	347	348	259		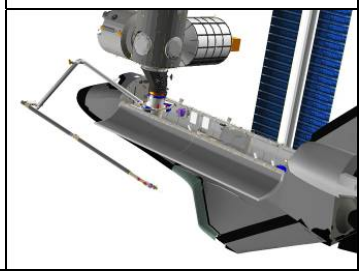

When AUTO SEQ READY lt – on:

A7U PAN/TILT to match LDRI view shown below

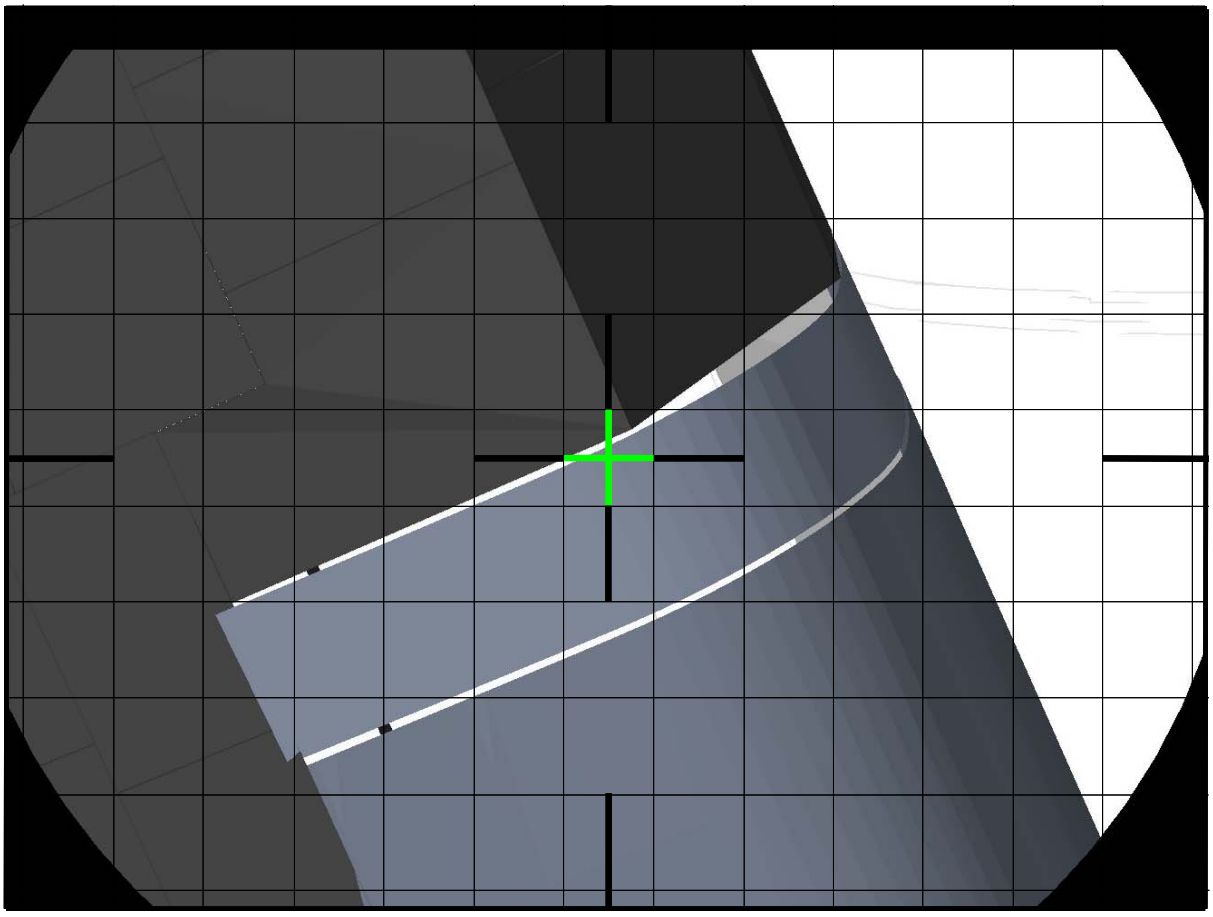

LDRI: 10, -95 (down)

√MCC to verify correct sensor view
Note PAN/TILT: _____, _____

A7U √DTV ← PL2
VID OUT – not DTV
VID IN – not PL2

NOTE

Time between Pts 88 and 95 ~ 3:30 min

L10(VTR) REC pb – push, hold
PLAY pb – push, simo (red ●)

AUTO SEQ – PROCEED (IN PROG lt on)

Pt	X	Y	Z	PITCH	YAW	ROLL	●	
88P	**-898**	**-214**	**-230**	**347**	**348**	**259**		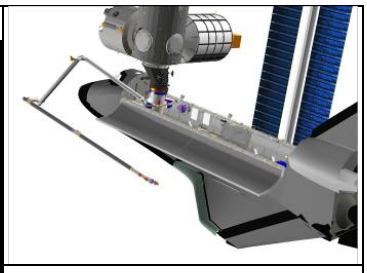
89	-979	-231	-226	347	348	259		
90	-1034	-262	-231	347	348	259		
91	-1110	-338	-234	347	348	259		
92	-1183	-406	-238	353	356	254		
93	-1244	-467	-242	354	356	254		
94	-1312	-504	-245	359	0	254		
95P	**-1343**	**-511**	**-246**	**359**	**0**	**254**		

When AUTO SEQ READY lt – on:
L10(VTR) STOP pb – push (no red ●)

5. PORT LDRI ACAS, SECTION 4

NOTE

Between Pts 95 & 96, arm adjusts for survey of Zone 4. Section 4 then scans RCC Zone 4, Panels 22 → 1. Time between Pts 95 and 96 ~ 1:50 min

Section 4 Clearance Views	Cameras
OBSS-to-PLBD	A[3], B[4], ELBOW, RSC[2]
OBSS-to-Wing	A[3], B[1,4], ELBOW, RSC[5]
[1]Good after X ~ -1327 [2]PLBD enters FOV at X ~ -1067 [3]Good until X ~ -1042	[4]Good until X ~ -1036 [5]Good until X ~ -975

AUTO SEQ – PROCEED (IN PROG lt on)

Pt	X	Y	Z	PITCH	YAW	ROLL	•	
95P	-1343	-511	-246	359	0	254		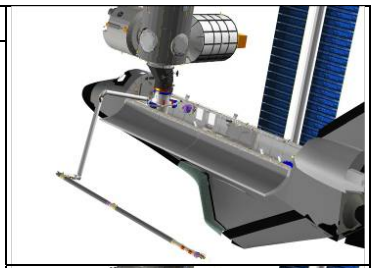
96P	-1323	-537	-315	346	348	282		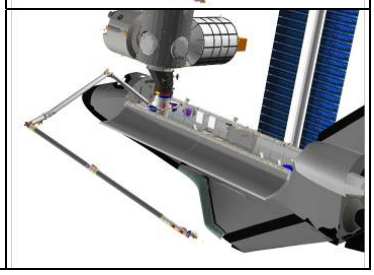

When AUTO SEQ READY lt – on:

A7U PAN/TILT to match LDRI view shown below

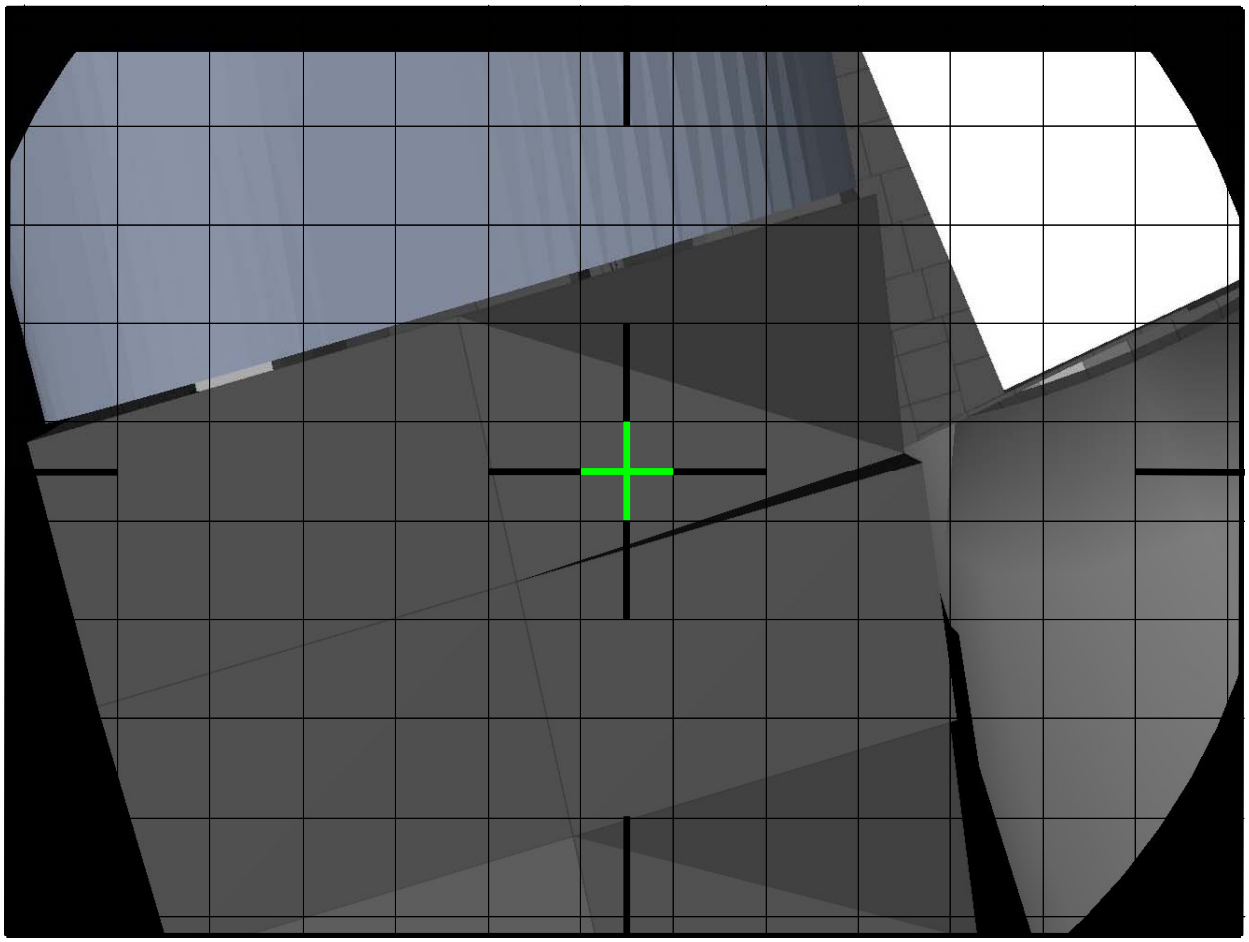

LDRI: 88 (right), -120 (down)

√MCC to verify correct sensor view

Note PAN/TILT: _____, _____

A7U √DTV ← PL2
VID OUT – not DTV
VID IN – not PL2

NOTE
Time between Pts 96 and 104 ~ 6:05 min

L10(VTR) REC pb – push, hold
PLAY pb – push, simo (red ●)

AUTO SEQ – PROCEED (IN PROG lt on)

Pt	X	Y	Z	PITCH	YAW	ROLL	●	
96P	**-1323**	**-537**	**-315**	**346**	**348**	**282**		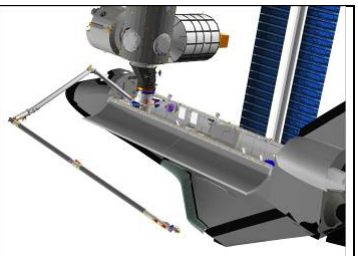
97	-1244	-513	-305	353	357	287		
98	-1176	-450	-298	352	2	290		
99	-1106	-380	-295	352	4	291		
100	-1023	-300	-288	354	357	289		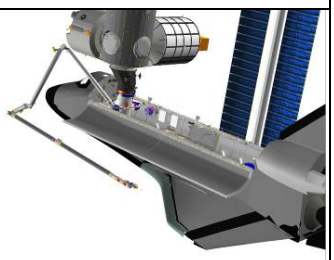
101	-989	-275	-294	350	350	282		
102	-965	-263	-294	350	350	282		
103	-933	-253	-289	358	347	283		
104P	**-887**	**-248**	**-287**	**4**	**341**	**282**		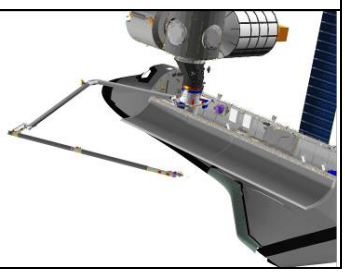

When AUTO SEQ READY lt – on:
L10(VTR) STOP pb – push (no red ●)

6. PORT LDRI ACAS, SECTION 5

NOTE
Between Pts 104 and 106, arm adjusts for survey of Zones 4 & 5. Section 5 then scans Zones 4 & 5, Panels 1 → 22. Time between Pts 104 and 106 ~ 1:35 min

Section 5 Clearance Views	Cameras
OBSS-to-PLBD	A[1], B[2], ELBOW, RSC[4]
OBSS-to-Wing	A[1,3,5], B[2], ELBOW, RSC[6]
[1]Good after X ~ -896 [2]Good after X ~ -1015 [3]Good until X ~ -1045	[4]PLBD leaves FOV at X ~ -1098 [5]Good after X ~ -1104 [6]Good after X ~ -1220

AUTO SEQ – PROCEED (IN PROG lt on)

Pt	X	Y	Z	PITCH	YAW	ROLL	●	
104P	**-887**	**-248**	**-287**	**4**	**341**	**282**		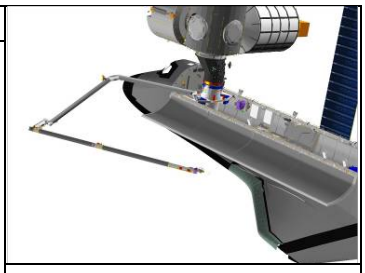
105	-887	-285	-287	4	341	282		
106P	**-897**	**-285**	**-331**	**2**	**336**	**302**		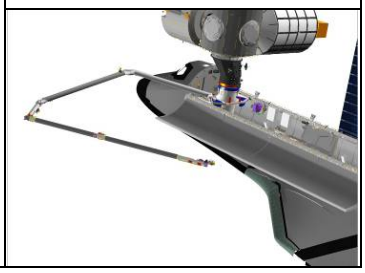

When AUTO SEQ READY lt – on:

A7U PAN/TILT to match LDRI view shown below

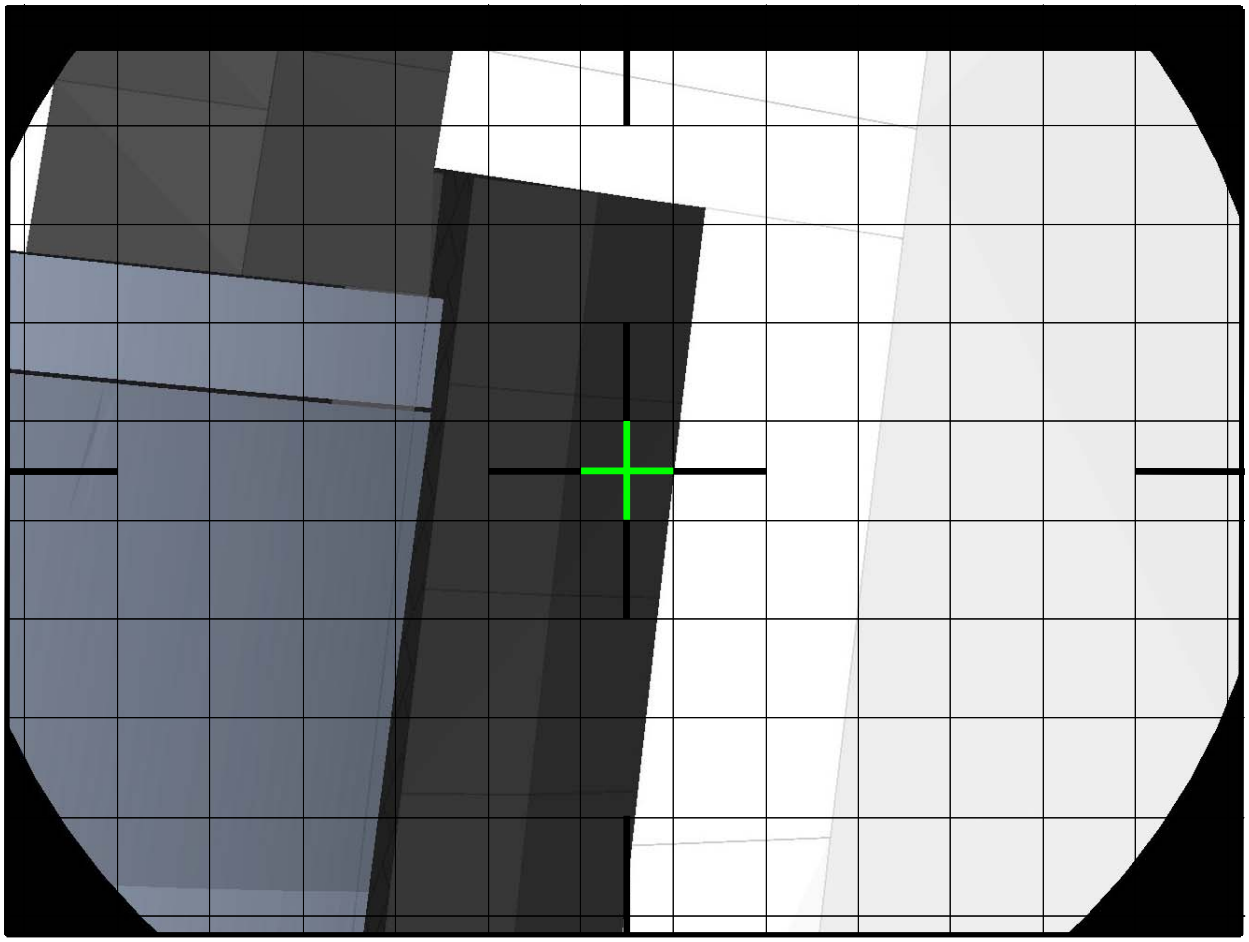

LDRI: 120 (right), -120

√MCC to verify correct sensor view
Note PAN/TILT: _____, _____

A7U √DTV ← PL2
VID OUT – not DTV
VID IN – not PL2

NOTE

Minimum clearance RMS-to-NODE 2 = 33 in between pts 113-114. Clearance can be monitored with camera B. Time between Pts 106 and 116 ~ 7:15 min

L10(VTR) REC pb – push, hold
PLAY pb – push, simo (red ●)

AUTO SEQ – PROCEED (IN PROG lt on)

Pt	X	Y	Z	PITCH	YAW	ROLL	●	
106P	**-897**	**-285**	**-331**	**2**	**336**	**302**		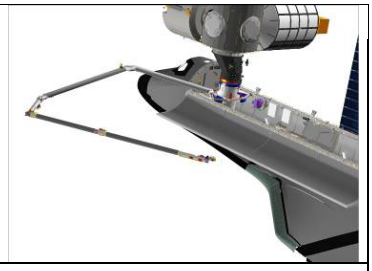
107	-910	-285	-330	2	340	302		
108	-926	-285	-325	1	340	298		
109	-950	-287	-335	359	340	292		
110	-978	-289	-352	357	345	287		
111	-1020	-286	-332	350	350	297		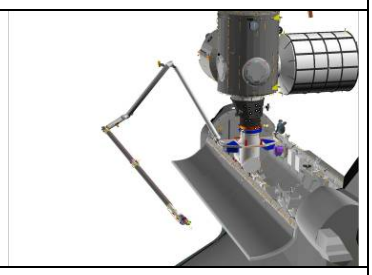
112	-1074	-329	-341	342	1	292		
113	-1148	-401	-346	340	357	289		
114	-1229	-475	-357	333	359	289		
115	-1280	-503	-363	327	1	285		
116P	**-1328**	**-517**	**-364**	**327**	**1**	**285**		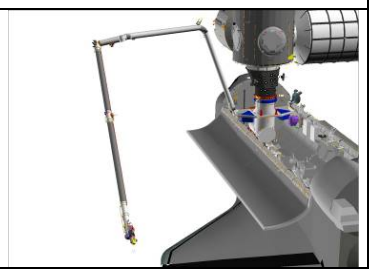

When AUTO SEQ READY lt – on:

L10(VTR) STOP pb – push (no red ●)

7. <u>PORT LDRI ACAS, SECTION 6</u>

<u>NOTE</u>

Between Pts 116 & 117, arm adjusts for survey of Zone 6. Section 6 then scans Zone 6, Panels 22 → 5. Time between Pts 116 and 117 ~ 1:25 min

Section 6 Clearance Views	Cameras
OBSS-to-PLBD	A[4,5], B, ELBOW, RSC[2,4]
OBSS-to-Wing	A[4,5], B, ELBOW[1], RSC[3,6]
[1]Good until X ~ -1264 [2]PLBD enters FOV at X ~ -1210 [3]Good until X ~ -1154 [4]Good until X ~ -1114	[5]Good after X ~ -1086 [6]Good after X ~ -1092

AUTO SEQ – PROCEED (IN PROG lt on)

Pt	X	Y	Z	PITCH	YAW	ROLL	•	
116P	-1328	-517	-364	327	1	285		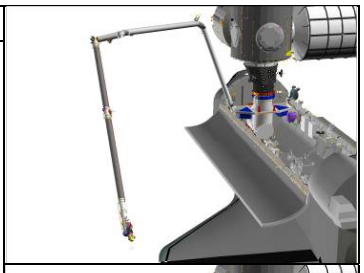
117P	-1338	-476	-389	345	357	254		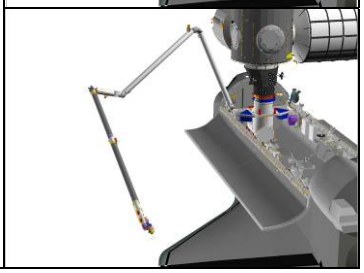

When AUTO SEQ READY lt – on:

A7U PAN/TILT to match LDRI view shown below

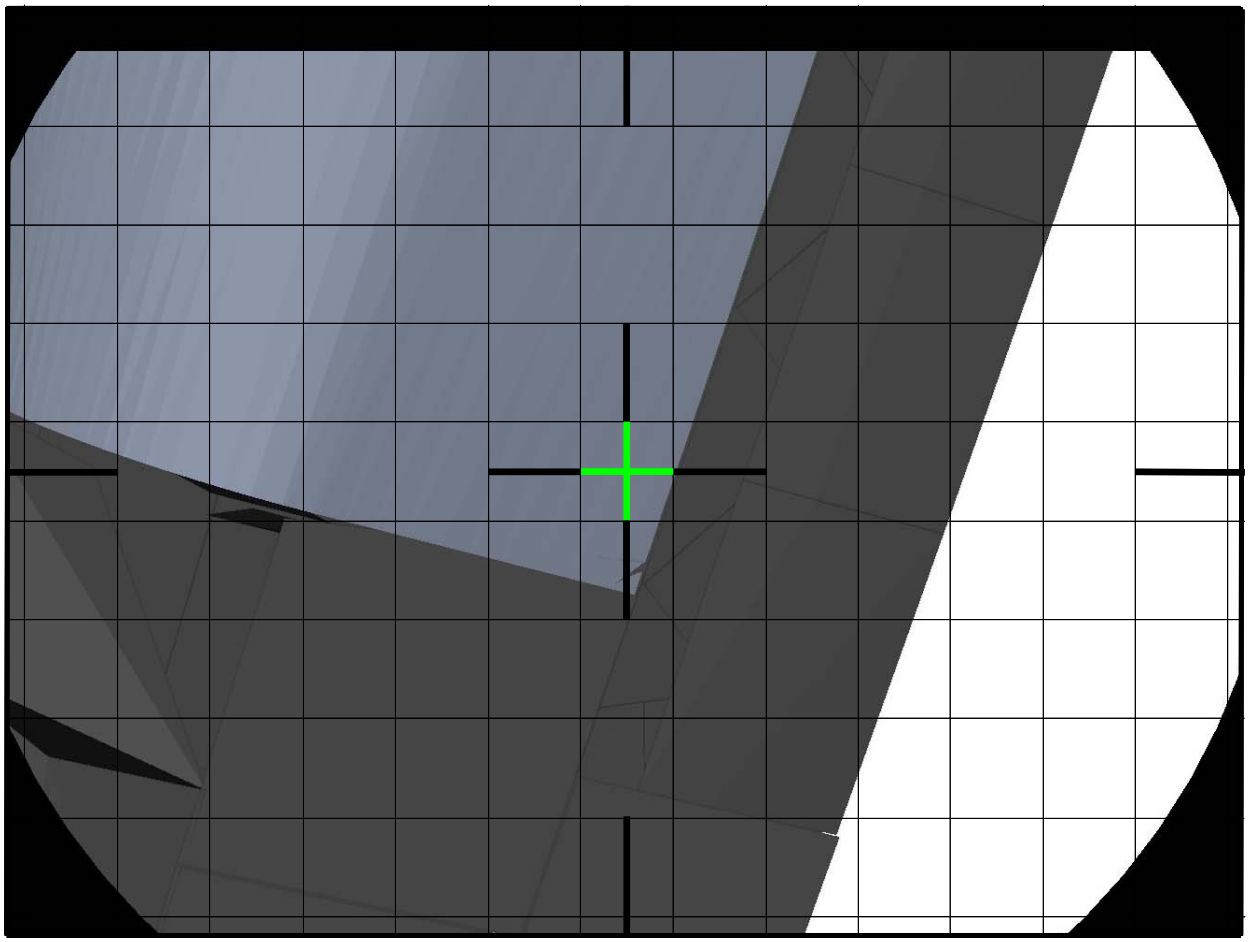

LDRI: 135 (right), -110 (up)

√MCC to verify correct sensor view

Note PAN/TILT: _____, _____

A7U √DTV ← PL2
VID OUT – not DTV
VID IN – not PL2

NOTE
Time between Pts 117 and 123 ~ 3:50 min

L10(VTR) REC pb – push, hold
PLAY pb – push, simo (red ●)

AUTO SEQ – PROCEED (IN PROG lt on)

Pt	X	Y	Z	PITCH	YAW	ROLL	●	
117P	**-1338**	**-476**	**-389**	**345**	**357**	**254**		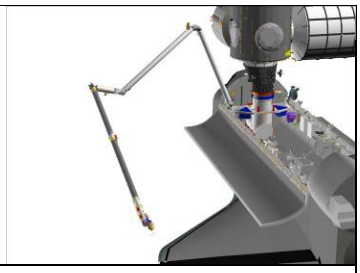
118	-1283	-453	-391	343	350	243		
119	-1166	-340	-392	343	350	243		
120	-1113	-285	-388	342	337	239		
121	-1071	-284	-378	352	332	270		
122	-1050	-279	-387	357	332	272		
123P	**-985**	**-279**	**-386**	**1**	**331**	**281**		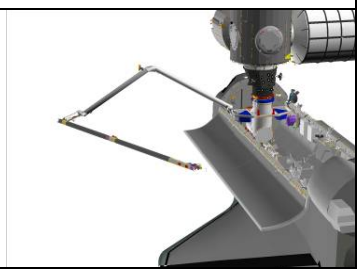

When AUTO SEQ IN PROG lt – off:
BRAKES – ON (tb-ON)

L10(VTR) STOP pb – push (no red ●)

A7U VIDEO OUT MUX 1 L pb – push (MIDDECK lt on)
LDRI MODE 2 pb – push (ITVC video displayed)

√VIDEO OUT – not DTV
√VIDEO IN – not PL2

8. MNVR TO OBSS HANDOFF TO STOW

MON 1	SSRMS Base Elbow
MON 2	B
DNLK MON 1	P1 LOOB

RHC RATE – as reqd (VERN within 10 ft)
BRAKES – OFF (tb-OFF)
MODE – SINGLE, ENTER

Mnvr to OBSS HANDOFF TO STOW posn (within 1°):

	SY	SP	EP	WP	WY	WR
Docked Port Survey End	+120.7	+42.9	-62.9	+32.8	-58.9	-67.5
1: WR +						-20.0
2: SP –		+6.1				
3: WY +					+7.1	
4: WR +						+86.4
5: WP –				+24.0		
6: EP +			-19.3			
7: SY +	+164.6					
OBSS Handoff to Stow	+164.6	+6.1	-19.3	+24.0	+7.1	+86.4

X	Y	Z	PITCH	YAW	ROLL	PL ID
-65	+200	-762	95	312	197	2

BRAKES – ON (tb-ON)

PARAM – PORT TEMP
JOINT – CRIT TEMP
GNC 23 RCS
√RCS FWD, ITEM 1: *****

MANF VLVS OVRD 1 – ITEM 40 EXEC (OP)
2 – ITEM 41 EXEC (OP)
3 – ITEM 42 EXEC (OP)
4 – ITEM 43 EXEC (OP)

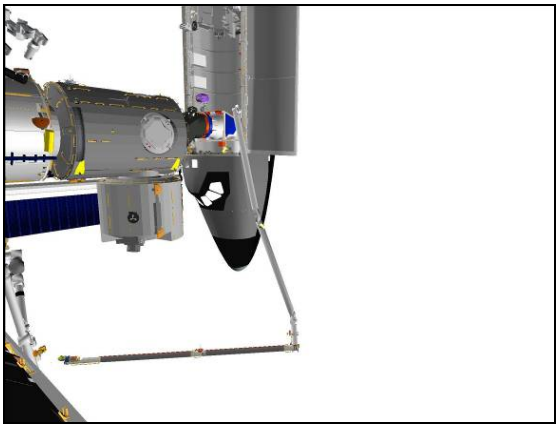

P1 LOOB (140,-10)

REFERENCE DATA

PL ID 3 – JLP UNBERTH ..... FS 6-2
4 – JLP INSTALL ..... FS 6-3
JLP JOINT ANGLES VS POR COORDINATES ..... FS 6-4
PRLA CONFIGURATION ..... FS 6-6
OBSS HANDOFF JOINT ANGLES VS POR COORDINATES ..... FS 6-7
AUTO SEQUENCES (UPLINK) ..... FS 6-9

PL ID 3 – JLP UNBERTH

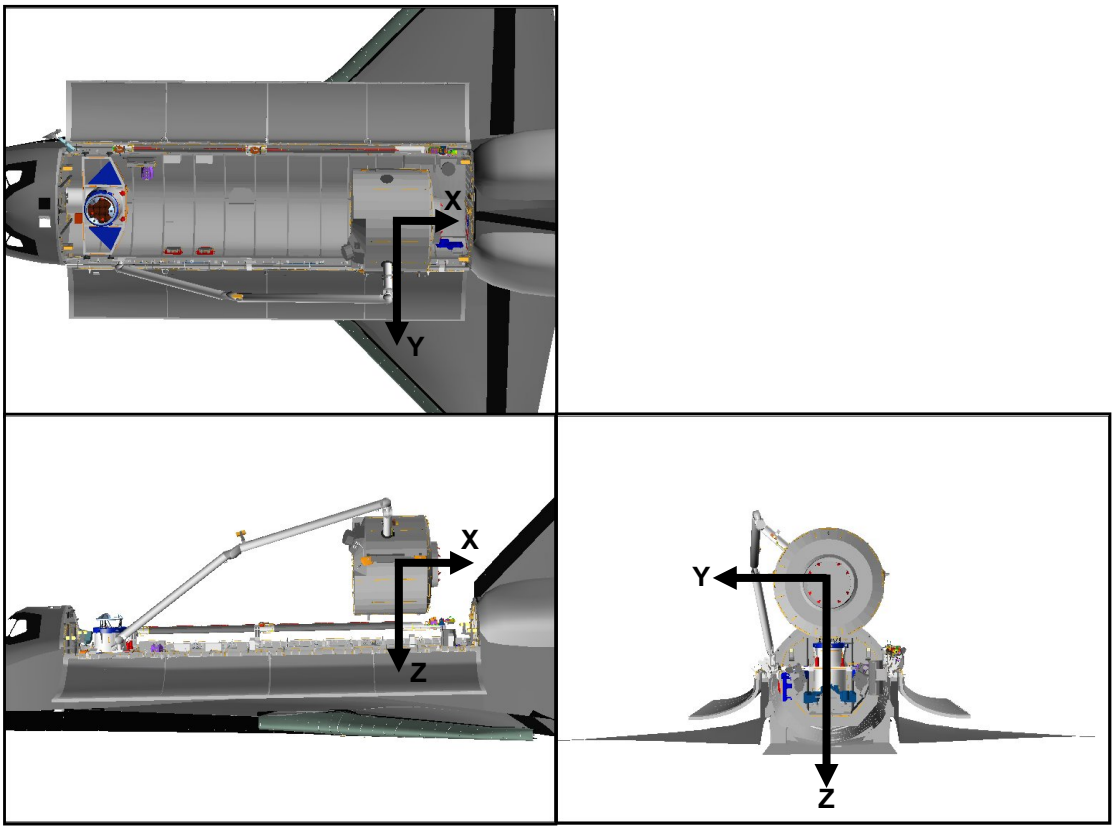

POR:	JLP Center of Trunnions at Trunnion Level	
PURPOSE:	JLP Unberth and Mnvr to Pre-install	
FOR RATES:	COARSE	VERN
TRANS LIM ft/sec	0.19	0.10
ROT LIM deg/sec	0.68	0.23
JOINT RATES:	COARSE	VERN
SHOULDER LIM deg/sec	0.33	0.11
ELBOW LIM deg/sec	0.46	0.15
WRIST LIM deg/sec	0.68	0.23

PL ID 4 – JLP INSTALL

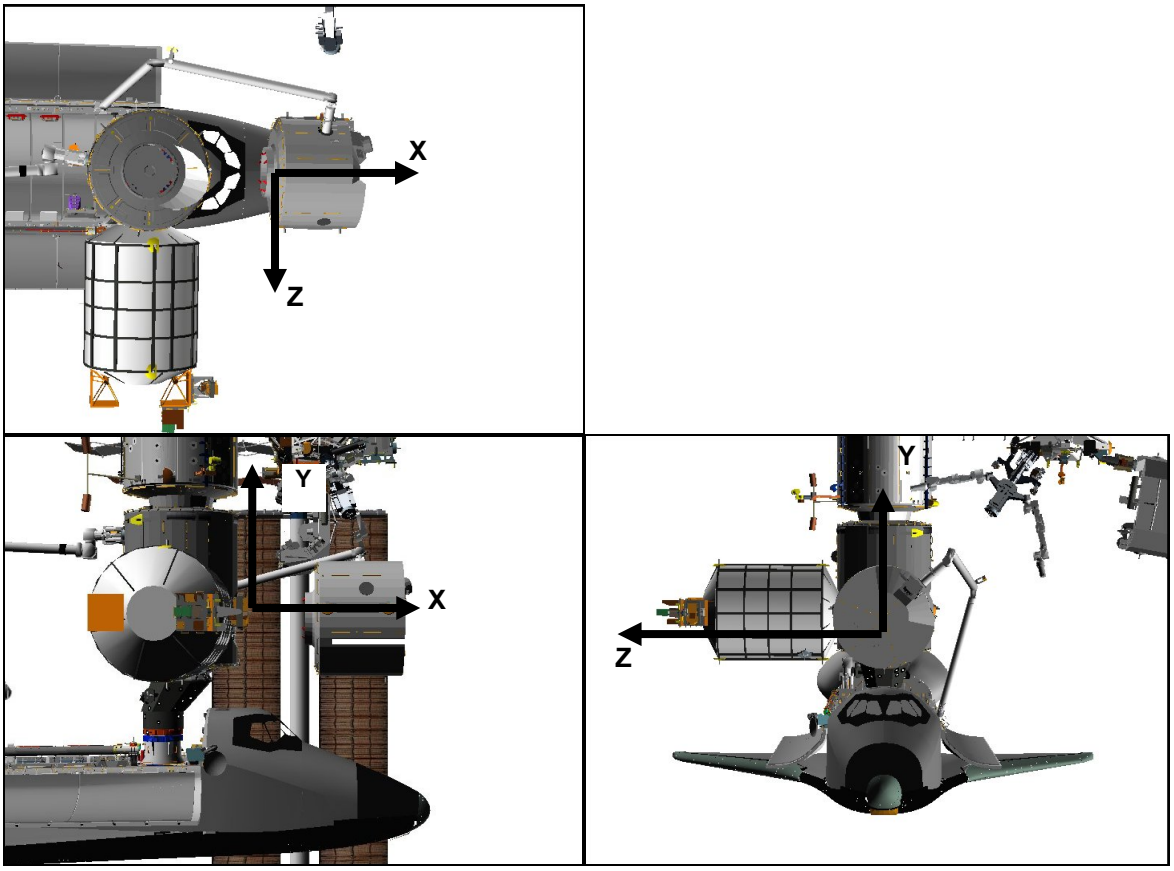

POR:	POR at Center of JLP CBM	
PURPOSE:	JLP Install on Node 2	
FOR RATES:	COARSE	VERN
TRANS LIM ft/sec	0.19	0.10
ROT LIM deg/sec	0.68	0.23
JOINT RATES:	COARSE	VERN
SHOULDER LIM deg/sec	0.33	0.11
ELBOW LIM deg/sec	0.46	0.15
WRIST LIM deg/sec	0.68	0.23

JLP JOINT ANGLES VS POR COORDINATES

JLP PRE-GRAPPLE posn:

X	Y	Z	PITCH	YAW	ROLL	PL ID
-1151	-123	-505	270	311	0	0
SY	SP	EP	WP	WY	WR	
+2.6	+40.2	-47.4	-84.2	-29.4	+16.4	

JLP GRAPPLE posn:

X	Y	Z	PITCH	YAW	ROLL	PL ID
-1161	0	-414	0	0	0	3
SY	SP	EP	WP	WY	WR	
-1.8	+36.7	-54.7	-71.0	-29.7	+22.0	

JLP HOVER posn:

X	Y	Z	PITCH	YAW	ROLL	PL ID
-1161	0	-574	0	0	0	3
SY	SP	EP	WP	WY	WR	
-8.3	+36.1	-22.0	-99.4	-29.4	+29.4	

JLP AUTO SEQUENCE (Auto Seq ID #5) posns:

Auto Pos #	X/ SY	Y/ SP	Z/ EP	PITCH/ WP	YAW/ WY	ROLL/ WR	PL ID
124	-1161	0	-574	0	0	0	3
	-8.3	+36.1	-22.0	-99.4	-29.4	+29.4	
125	-1184	-103	-861	41	67	14	3
	-13.8	+55.6	-21.4	-30.0	-9.5	+77.2	
126	-1054	-212	-938	243	58	171	3
	-24.4	+71.0	-21.0	-31.3	+39.4	+107.4	
127	-922	-275	-1000	315	346	173	3
	-33.8	+81.2	-20.7	+5.8	+48.9	+164.3	
128	-817	-306	-1017	5	312	200	3
	-59.7	+93.1	-21.5	+23.9	+53.0	+179.2	
129	-774	-282	-1018	105	327	289	3
	-125.3	+96.6	-23.8	+67.0	+37.1	+179.6	
130	-765	-281	-1005	112	339	295	3
	-146.0	+102.9	-35.8	+79.0	+23.9	+179.2	
131	-735	-300	-920	103	344	269	3
	-144.2	+120.3	-74.4	+101.4	+0.3	-180.0	
132	-543	-253	-736	163	335	250	3
	-167.3	+135.1	-134.9	+83.9	-35.9	+179.3	
133	-313	-146	-590	303	333	294	3
	-166.7	+95.2	-98.6	-36.6	-37.5	+178.8	
134	-352	-138	-601	338	353	294	3
	-162.4	+85.5	-79.0	-85.6	-40.0	+179.2	

JLP PRE-INSTALL posn:

X	Y	Z	PITCH	YAW	ROLL	PL ID
-399	-2	-651	0	359	1	3
-478	0	-636	180	1	89	4
SY	SP	EP	WP	WY	WR	
-162.4	+85.5	-79.0	-85.6	+28.5	+179.2	

JLP READY-TO-LATCH posn:

X	Y	Z	PITCH	YAW	ROLL	PL ID
-535	0	-635	180	0	90	4
SY	SP	EP	WP	WY	WR	
-158.5	+97.0	-90.9	-85.0	+27.8	+175.2	

JLP INSTALL posn:

X	Y	Z	PITCH	YAW	ROLL	PL ID
-540	0	-635	180	0	90	4
SY	SP	EP	WP	WY	WR	
-158.1	+98.1	-91.9	-84.9	+27.8	+174.7	

INSTALLED JLP UNGRAPPLE posn:

X	Y	Z	PITCH	YAW	ROLL	PL ID
-448	-113	-731	271	311	1	0
SY	SP	EP	WP	WY	WR	
-164.8	+97.2	-80.0	-99.4	+28.9	+182.2	

JLP PRLA CONFIGURATION

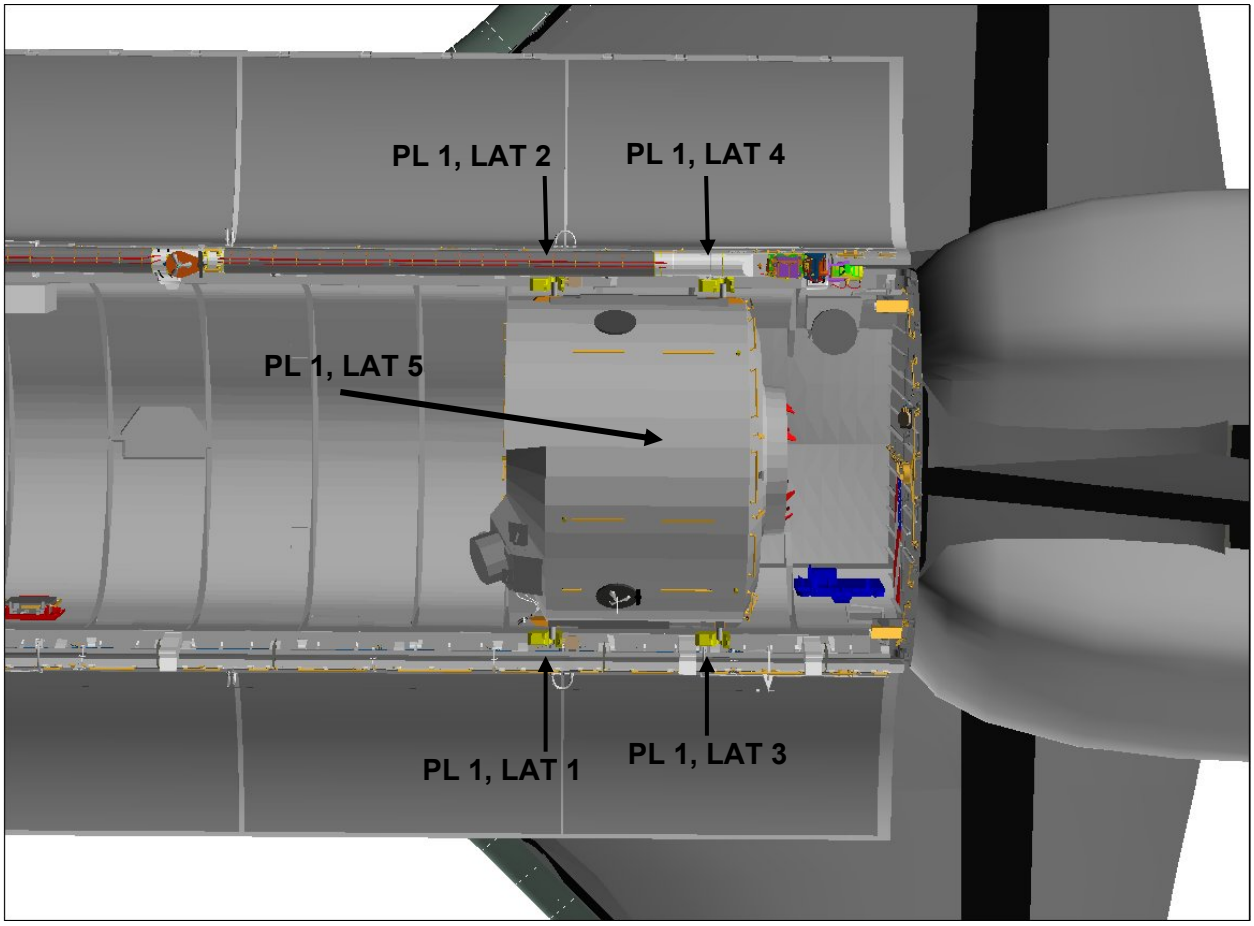

SEQUENCE	PL SEL	RELEASE	LATCH
AKA	1	5	5
PRLA	1	1,2 (forward)	3,4 (aft)
PRLA	1	3,4 (aft)	1,2 (forward)

OBSS HANDOFF JOINT ANGLES VS POR COORDINATES

OBSS PRE-GRAPPLE posn:

X	Y	Z	PITCH	YAW	ROLL	PL ID
-1017	-364	-674	284	0	270	0
SY	SP	EP	WP	WY	WR	
+24.4	+64.7	-34.4	-99.6	+11.3	-99.0	

OBSS HANDOFF (SSRMS TO SRMS) posn:

X	Y	Z	PITCH	YAW	ROLL	PL ID	
-1030	+227	-614	284	270	270	2	*
SY	SP	EP	WP	WY	WR		
+26.1	+66.3	-49.2	-86.0	+10.7	-100.7		

*Display singularity

-Y STAR TRACKER CLEAR posn:

X	Y	Z	PITCH	YAW	ROLL	PL ID
-1014	-367	-412	6	335	276	2
SY	SP	EP	WP	WY	WR	
+116.0	+30.0	-42.6	+35.2	-50.0	-55.6	

SLP VIEWING posn:

X	Y	Z	PITCH	YAW	ROLL	PL ID
-975	-411	-412	353	342	265	2
SY	SP	EP	WP	WY	WR	
+125.4	+41.6	-42.6	+35.2	-50.0	-55.6	

STBD DOCKED ACAS START posn:

X	Y	Z	PITCH	YAW	ROLL	PL ID	
-940	+291	-363	271	329	66	2	*
SY	SP	EP	WP	WY	WR		
-32.8	+78.3	-58.6	+33.2	-77.2	-113.7		

*Display singularity

STBD DOCKED ACAS 2 START posn:

X	Y	Z	PITCH	YAW	ROLL	PL ID
-903	+183	-212	31	278	24	2
SY	SP	EP	WP	WY	WR	
+67.9	+33.9	-88.9	-17.2	-1.1	-131.7	

NOSE DOCKED ACAS START posn:

X	Y	Z	PITCH	YAW	ROLL	PL ID
-724	-414	+123	275	333	271	2
SY	SP	EP	WP	WY	WR	
+90.4	+37.9	-36.7	-8.7	-1.7	-155.6	

PORT DOCKED ACAS START posn:

X	Y	Z	PITCH	YAW	ROLL	PL ID
-899	-243	-284	2	341	289	2
SY	SP	EP	WP	WY	WR	
+138.9	+24.6	-61.2	+36.7	-67.5	-74.4	

OBSS HANDOFF (SRMS TO SSRMS) TO STOW posn:

X	Y	Z	PITCH	YAW	ROLL	PL ID
-65	+200	-762	95	312	197	2
SY	SP	EP	WP	WY	WR	
+164.6	+6.1	-19.3	+24.0	+7.1	+86.4	

OBSS HANDOFF (SRMS TO SSRMS) TO STOW UNGRAPPPLE posn:

X	Y	Z	PITCH	YAW	ROLL	PL ID
-163	-232	-364	173	11	230	0
SY	SP	EP	WP	WY	WR	
+163.6	+25.3	-59.1	+44.7	+8.0	+86.2	

OBSS AUTO SEQUENCES (UPLINK)

OBSS LDRI RCC SURVEY – STBD DOCKED PART 1 (PL ID 2)

Auto Seq ID	Auto posn	X/ SY	Y/ SP	Z/ EP	PITCH/ WP	YAW/ WY	ROLL/ WR	Pause
1	1	-940	+291	-363	271	329	66	**P**
		-32.8	+78.3	-58.6	+33.2	-77.2	-113.7	
1	2	-971	+287	-376	270	322	61	
		-19.5	+70.3	-50.9	+103.6	-70.6	-44.6	
1	3	-1052	+293	-373	273	322	63	**P**
		-17.3	+49.3	-19.7	+99.5	-70.4	-40.4	
1	4	-1020	+265	-407	273	308	100	**P**
		+5.1	+82.5	-75.4	+76.7	-57.3	-74.3	
1	5	-1104	+321	-383	274	305	101	**P**
		+1.0	+64.8	-65.5	+79.1	-53.6	-81.1	
1	6	-1106	+278	-391	284	320	160	**P**
		-22.4	+89.7	-73.2	+2.6	-2.1	-144.9	
1	7	-1235	+406	-391	284	320	160	
		-30.1	+47.2	-24.0	-3.7	+5.2	-147.6	
1	8	-1218	+419	-388	307	325	171	
		-52.5	+80.5	-90.9	+49.5	+22.0	-172.1	
1	9	-1262	+463	-388	307	325	171	
		-51.1	+66.3	-75.8	+48.2	+20.9	-171.2	
1	10	-1340	+472	-392	306	319	171	**P**
		-36.6	+54.5	-59.8	+41.9	+9.9	-156.0	
1	11	-1342	+517	-355	302	326	164	**P**
		-45.0	+30.0	-21.4	+24.0	+12.4	-166.1	
1	12	-1240	+498	-354	294	315	136	
		-32.5	+57.0	-65.9	+43.9	-20.7	-146.0	
1	13	-1064	+312	-354	294	315	136	**P**
		-16.7	+113.6	-115.2	+41.4	-33.3	-135.3	
1	14	-1073	+333	-345	284	333	141	
		-48.8	+78.3	-65.8	+2.1	+3.7	-164.0	
1	15	-1073	+341	-290	284	333	156	**P**
		-50.2	+81.3	-80.9	+15.4	+20.0	-164.6	
1	16	-1241	+505	-295	298	331	157	
		-53.8	+46.6	-54.6	+36.0	+16.0	-172.8	
1	17	-1281	+528	-295	305	331	157	
		-55.4	+43.5	-58.9	+48.3	+12.6	-177.2	
1	18	-1333	+541	-285	304	334	155	**P**
		-53.2	+18.7	-15.5	+27.0	+9.9	-178.0	
1	19	-1300	+521	-193	307	341	141	
		-59.3	+27.4	-50.3	+46.3	+1.9	+172.5	
1	20	-1331	+506	-194	317	341	23	**P**
		-56.6	+11.5	-13.8	-109.4	-43.3	+66.4	
1	21	-1288	+480	-227	317	341	23	
		-60.0	+31.8	-43.1	-97.4	-44.5	+70.8	
1	22	-1265	+459	-232	316	342	24	
		-61.5	+28.0	-50.4	-93.7	-46.1	+74.9	
1	23	-1265	+472	-213	317	341	23	
		-61.7	+37.9	-56.0	-88.9	-45.0	+73.1	
1	24	-1161	+370	-224	303	349	29	
		-63.0	+41.7	-39.8	-99.9	-57.3	+94.1	

OBSS LDRI RCC SURVEY – STBD DOCKED PART 1 (PL ID 2) (Cont)

Auto Seq ID	Auto posn	X/ SY	Y/ SP	Z/ EP	PITCH/ WP	YAW/ WY	ROLL/ WR	Pause
1	25	-1075	+298	-223	292	354	33	
		-61.4	+38.7	-23.1	-107.1	-64.7	+109.0	
1	26	-1053	+298	-210	290	354	34	**P**
		-61.5	+42.5	-31.1	-99.7	-66.4	+113.0	
1	27	-1298	+630	-627	339	321	81	
		-61.4	+43.2	-32.5	-38.2	-66.5	+113.2	
1	28	-1451	-124	-1193	59	11	89	
		-14.2	+41.1	-29.2	-39.4	-66.8	+23.8	
1	29	-1273	-781	-128	355	39	357	**P**
		+67.9	+33.8	-88.8	-17.1	+14.5	-10.1	

OBSS LDRI RCC SURVEY – STBD DOCKED PART 2 (PL ID 2)

Auto Seq ID	Auto posn	X/ SY	Y/ SP	Z/ EP	PITCH/ WP	YAW/ WY	ROLL/ WR	Pause
2	30	-903	+183	-212	31	278	24	**P**
		+67.9	+33.9	-88.9	-17.2	-1.1	-131.7	
2	31	-1008	+201	-214	15	291	357	
		+71.0	+34.6	-103.9	+4.3	-10.3	-120.6	
2	32	-1062	+224	-214	15	291	357	
		+60.6	+32.8	-102.5	+6.1	-5.9	-111.2	
2	33	-1120	+274	-208	11	298	345	**P**
		+54.9	+28.1	-116.4	+33.6	-5.4	-98.7	
2	34	-1028	+280	-238	18	298	7	**P**
		+70.9	+29.6	-122.4	+21.8	-6.0	-114.5	
2	35	-1007	+255	-238	18	299	9	
		+79.1	+30.9	-120.4	+16.1	-7.1	-121.5	
2	36	-924	+228	-241	21	302	14	**P**
		+103.1	+26.9	-112.9	+5.6	-11.5	-143.0	
2	37	-892	+222	-235	15	301	11	**P**
		+109.5	+33.9	-115.2	+2.5	-9.8	-149.3	
2	38	-903	+241	-246	67	288	61	**P**
		+65.7	+14.9	-84.2	-14.6	-4.8	-128.7	
2	39	-1008	+276	-246	67	288	61	**P**
		+49.0	+9.6	-73.3	-19.0	-2.9	-112.0	
2	40	-1044	+306	-248	67	288	61	**P**
		+42.1	+7.3	-70.3	-19.4	-2.0	-105.2	
2	41	-1060	+310	-194	56	284	42	
		+42.4	+6.5	-69.9	-9.2	-2.8	-105.2	
2	42	-724	-414	+123	275	333	271	**P**
		+90.4	+37.8	-36.7	-8.6	-1.7	-155.6	

OBSS LDRI RCC SURVEY – NOSE CAP (PL ID 2)

Auto Seq ID	Auto posn	X/ SY	Y/ SP	Z/ EP	PITCH/ WP	YAW/ WY	ROLL/ WR	Pause
3	43	-724	-414	+123	275	333	271	**P**
		+90.4	+37.9	-36.7	-8.7	-1.7	-155.6	
3	44	-122	+9	-155	259	313	314	
		+152.5	+36.3	-21.6	-26.4	-9.4	+171.3	
3	45	-123	+73	-341	251	307	312	
		+157.3	+47.9	-17.0	-41.1	-10.1	+162.8	
3	46	-187	+98	-348	260	303	315	**P**
		+156.6	+48.8	-19.1	-47.9	-9.1	+162.7	
3	47	-160	+58	-371	221	302	274	
		+136.3	+81.8	-80.6	-18.5	-0.5	+149.6	
3	48	-177	+71	-381	227	305	291	**P**
		+139.9	+91.1	-85.3	-12.6	+2.2	+152.6	
3	49	-185	+27	-425	191	297	287	
		+118.0	+67.6	-87.8	+39.6	+38.0	120.9	
3	50	-181	+27	-403	154	289	281	**P**
		+122.9	+15.3	-35.5	+72.8	+34.9	+87.0	
3	51	-182	+7	-414	146	296	273	
		+118.8	+14.5	-45.0	+80.9	+31.0	+83.3	
3	52	-177	+31	-385	220	296	348	
		+127.1	+57.0	-64.0	+66.4	+43.6	+106.8	
3	53	-184	-26	-423	148	309	281	
		+110.0	+18.5	-69.3	+103.9	+22.2	+78.6	
3	54	-170	-65	-369	173	327	275	
		+87.0	+52.1	-124.3	+103.1	+34.4	+96.8	
3	55	-148	-12	-332	169	306	250	**P**
		+110.3	+39.8	-86.1	+46.6	+33.9	+119.3	
3	56	-155	+38	-300	233	297	309	**P**
		+134.8	+56.5	-59.7	+0.2	+22.2	+150.9	
3	57	-183	+70	-273	184	282	237	
		+128.7	+19.6	-32.9	-20.0	+22.4	147.3	
3	58	-209	+27	-228	238	298	266	**P**
		+133.5	+56.2	-60.2	-32.4	-10.8	+157.6	
3	59	-236	0	-234	217	287	242	**P**
		+123.1	+25.5	-25.2	-48.5	+2.0	+159.0	
3	60	-235	-35	-244	238	298	267	
		+126.5	+48.5	-40.8	-42.8	-4.4	+161.9	
3	61	-232	-67	-249	222	312	257	**P**
		+113.5	+82.9	-88.2	-18.1	+1.4	+157.5	
3	62	-191	-58	-267	234	322	268	**P**
		+138.2	+97.2	-85.8	-26.2	-27.4	+159.0	
3	63	-168	-13	-270	214	303	256	
		+122.6	+66.1	-78.5	-13.9	+3.9	+151.1	
3	64	-161	-40	-287	231	317	283	
		+135.4	+90.3	-83.6	-13.4	-8.7	+159.2	
3	65	-166	-60	-348	189	326	271	**P**
		+89.3	+89.9	-134.7	+59.6	+34.4	+119.9	
3	66	-179	-70	-381	185	316	280	**P**
		+96.4	+71.7	-109.3	+63.5	+38.5	+111.1	
3	67	-196	-80	-306	221	320	274	**P**
		+115.9	+100.5	-96.3	-9.5	+6.2	+154.3	

OBSS LDRI RCC SURVEY – NOSE CAP (PL ID 2) (Cont)

Auto Seq ID	Auto posn	X/ SY	Y/ SP	Z/ EP	PITCH/ WP	YAW/ WY	ROLL/ WR	Pause
3	68	-380	-158	-91	262	321	284	
		+125.0	+71.6	-68.3	-20.6	-14.5	-176.9	
3	69	-528	-119	-98	293	325	290	
		+144.2	+62.8	-60.4	-30.4	-44.3	-162.8	
3	70	-899	-243	-284	2	341	289	**P**
		+138.8	+24.6	-61.2	+36.9	-67.4	-74.2	

OBSS LDRI RCC SURVEY – PORT (PL ID 2)

Auto Seq ID	Auto posn	X/ SY	Y/ SP	Z/ EP	PITCH/ WP	YAW/ WY	ROLL/ WR	Pause
4	71	-899	-243	-284	2	341	289	**P**
		+138.9	+24.6	-61.2	+36.7	-67.5	-74.4	
4	72	-958	-253	-278	2	341	293	
		+132.6	+32.0	-75.1	+35.2	-60.7	-81.4	
4	73	-1023	-277	-267	0	353	308	
		+137.2	+46.0	-105.8	+30.5	-49.2	-95.4	
4	74	-1057	-310	-267	0	356	307	
		+132.8	+48.4	-112.0	+39.0	-43.5	-88.9	
4	75	-1186	-442	-272	0	359	309	
		+104.6	+53.8	-108.0	+34.1	-14.5	-75.6	
4	76	-1265	-509	-274	0	350	309	
		+90.5	+36.5	-61.6	+5.1	-8.3	-76.5	
4	77	-1324	-523	-274	0	348	315	**P**
		+83.6	+27.0	-40.2	-12.7	-2.7	-75.7	
4	78	-1345	-496	-232	345	352	262	**P**
		+77.7	+52.1	-81.0	+53.7	+1.4	-89.2	
4	79	-1268	-456	-230	345	352	262	
		+88.0	+59.4	-96.4	+62.1	-7.9	-84.8	
4	80	-1175	-357	-219	345	345	262	
		+101.6	+58.8	-101.1	+67.7	-27.1	-78.2	
4	81	-1134	-315	-218	345	345	262	
		+109.9	+60.7	-108.7	+75.7	-34.5	-73.9	
4	82	-1097	-277	-214	345	345	262	
		+118.3	+60.1	-113.1	+83.9	-41.8	-68.6	
4	83	-1061	-238	-210	345	345	262	
		+127.4	+57.8	-115.3	+93.5	-49.4	-61.5	
4	84	-998	-216	-214	345	345	259	
		+138.2	+51.6	-106.7	+105.8	-56.4	-45.3	
4	85	-972	-211	-216	345	345	259	
		+141.7	+49.1	-101.8	+107.8	-58.5	-40.2	
4	86	-935	-206	-219	345	345	259	
		+145.8	+44.9	-93.5	+109.7	-60.7	-33.2	
4	87	-906	-204	-220	345	345	259	**P**
		+148.4	+40.9	-85.9	+110.2	-61.9	-28.4	
4	88	-898	-214	-230	347	348	259	**P**
		+151.6	+37.4	-83.2	+112.5	-60.5	-24.5	
4	89	-979	-231	-226	347	348	259	
		+142.8	+47.3	-102.3	+109.1	-56.1	-39.1	
4	90	-1034	-262	-231	347	348	259	
		+133.0	+54.0	-109.7	+100.1	-49.7	-51.4	

OBSS LDRI RCC SURVEY – PORT (PL ID 2) (Cont)

Auto Seq ID	Auto posn	X/ SY	Y/ SP	Z/ EP	PITCH/ WP	YAW/ WY	ROLL/ WR	Pause
4	91	-1110	-338	-234	347	348	259	
		+115.4	+57.6	-106.2	+82.6	-35.9	-66.5	
4	92	-1183	-406	-238	353	356	254	
		+105.4	+47.4	-108.3	+97.8	-18.3	-66.4	
4	93	-1244	-467	-242	354	356	254	
		+94.2	+43.7	-95.2	+86.8	-8.9	-72.3	
4	94	-1312	-504	-245	359	0	254	
		+83.9	+33.3	-88.5	+90.8	+4.7	-74.5	
4	95	-1343	-511	-246	359	0	254	**P**
		+79.6	+32.4	-85.3	+88.9	+8.1	-77.0	
4	96	-1323	-537	-315	346	348	282	**P**
		+80.9	+49.1	-50.2	+5.9	+0.6	-87.1	
4	97	-1244	-513	-305	353	357	287	
		+93.4	+63.0	-95.3	+34.6	-4.2	-77.4	
4	98	-1176	-450	-298	352	2	290	
		+107.4	+76.4	-122.8	+46.3	-12.9	-76.9	
4	99	-1106	-380	-295	352	4	291	
		+129.7	+77.1	-134.2	+56.0	-33.1	-76.8	
4	100	-1023	-300	-288	354	357	289	
		+143.2	+59.7	-116.9	+57.7	-54.0	-76.3	
4	101	-989	-275	-294	350	350	282	
		+141.9	+62.4	-105.9	+54.8	-59.0	-73.1	
4	102	-965	-263	-294	350	350	282	
		+145.7	+59.5	-102.4	+55.6	-62.7	-71.4	
4	103	-933	-253	-289	358	347	283	
		+143.2	+37.8	-83.6	+59.1	-64.9	-64.1	
4	104	-887	-248	-287	4	341	282	**P**
		+138.7	+16.1	-50.9	+54.8	-67.1	-54.1	
4	105	-887	-285	-287	4	341	282	
		+135.8	+11.3	-38.1	+44.8	-64.3	-56.4	
4	106	-897	-285	-331	2	336	302	**P**
		+131.8	+25.2	-40.2	-13.0	-60.8	-101.1	
4	107	-910	-285	-330	2	340	302	
		+134.6	+32.1	-56.2	-2.8	-60.3	-98.7	
4	108	-926	-285	-325	1	340	298	
		+133.5	+35.2	-62.3	+8.1	-60.4	-92.4	
4	109	-950	-287	-335	359	340	292	
		+132.0	+42.7	-71.3	+20.8	-59.9	-84.2	
4	110	-978	-289	-352	357	345	287	
		+135.7	+55.0	-89.7	+37.0	-59.1	-75.7	
4	111	-1020	-286	-332	350	350	297	
		+138.4	+76.6	-109.9	+18.9	-51.8	-94.3	
4	112	-1074	-329	-341	342	1	292	
		+144.5	+110.9	-131.3	+18.5	-47.0	-87.9	
4	113	-1148	-401	-346	340	357	289	
		+111.3	+106.5	-115.8	+9.9	-17.6	-89.7	
4	114	-1229	-475	-357	333	359	289	
		+82.7	+103.5	-95.1	-6.4	+14.9	-96.3	

OBSS LDRI RCC SURVEY – PORT (PL ID 2) (Cont)

Auto Seq ID	Auto posn	X/ SY	Y/ SP	Z/ EP	PITCH/ WP	YAW/ WY	ROLL/ WR	Pause
4	115	-1280	-503	-363	327	1	285	
		+63.2	+97.6	-79.2	-9.6	+35.4	-106.0	
4	116	-1328	-517	-364	327	1	285	**P**
		+55.8	+89.2	-69.8	-9.5	+42.7	-107.5	
4	117	-1338	-476	-389	345	357	254	**P**
		+74.7	+86.1	-101.8	+49.9	+5.8	-92.3	
4	118	-1283	-453	-391	343	350	243	
		+85.0	+78.6	-87.6	+51.5	-12.6	-84.7	
4	119	-1166	-340	-392	343	350	243	
		+110.2	+97.3	-115.5	+67.9	-30.3	-65.2	
4	120	-1113	-285	-388	342	337	239	
		+109.8	+80.0	-93.2	+69.6	-41.1	-56.1	
4	121	-1071	-284	-378	352	332	270	
		+112.1	+61.9	-80.6	+39.3	-48.8	-70.4	
4	122	-1050	-279	-387	357	332	272	
		+114.9	+55.2	-78.4	+45.7	-51.5	-63.9	
4	123	-985	-279	-386	1	331	281	**P**
		+120.7	+42.9	-62.9	+32.8	-58.9	-67.5	

CUE CARD CONFIGURATION

Fabricate as transparency

ZOOM 34.0 HFOV
FOCUS 5.0 FT
EYEPOINT APPROX 18 IN

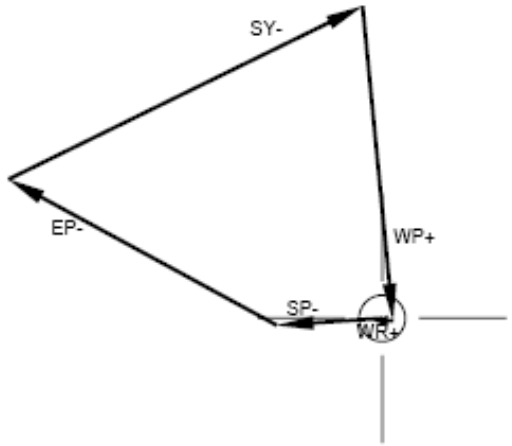

JLP SJ GRAPPLE – WRIST CCTV OVERLAY

PDRS-9a/123/O/B

Fabricate as transparency

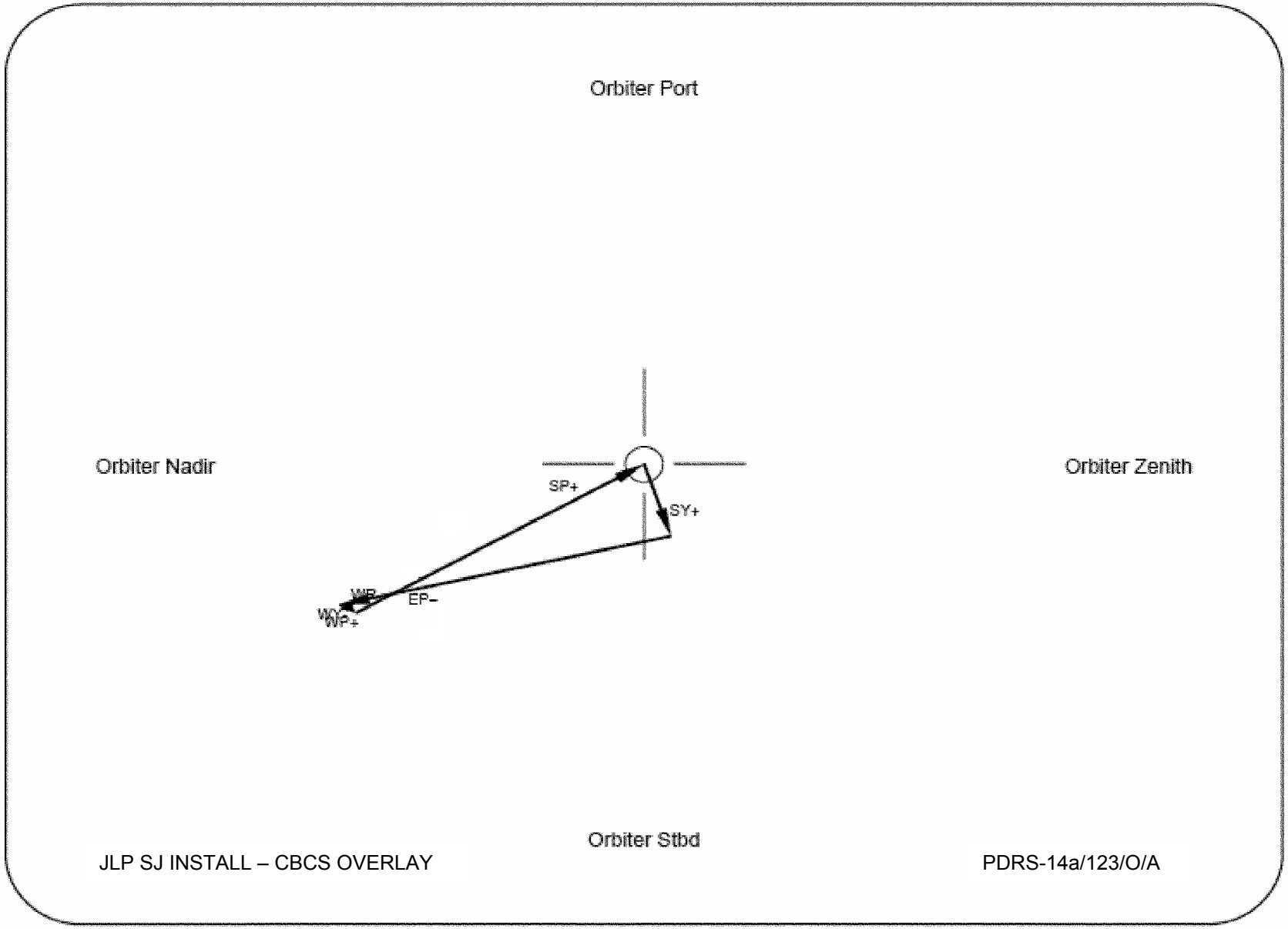

JLP SJ INSTALL – CBCS OVERLAY

PDRS-14a/123/O/A

(reduced copy)

Fabricate as transparency

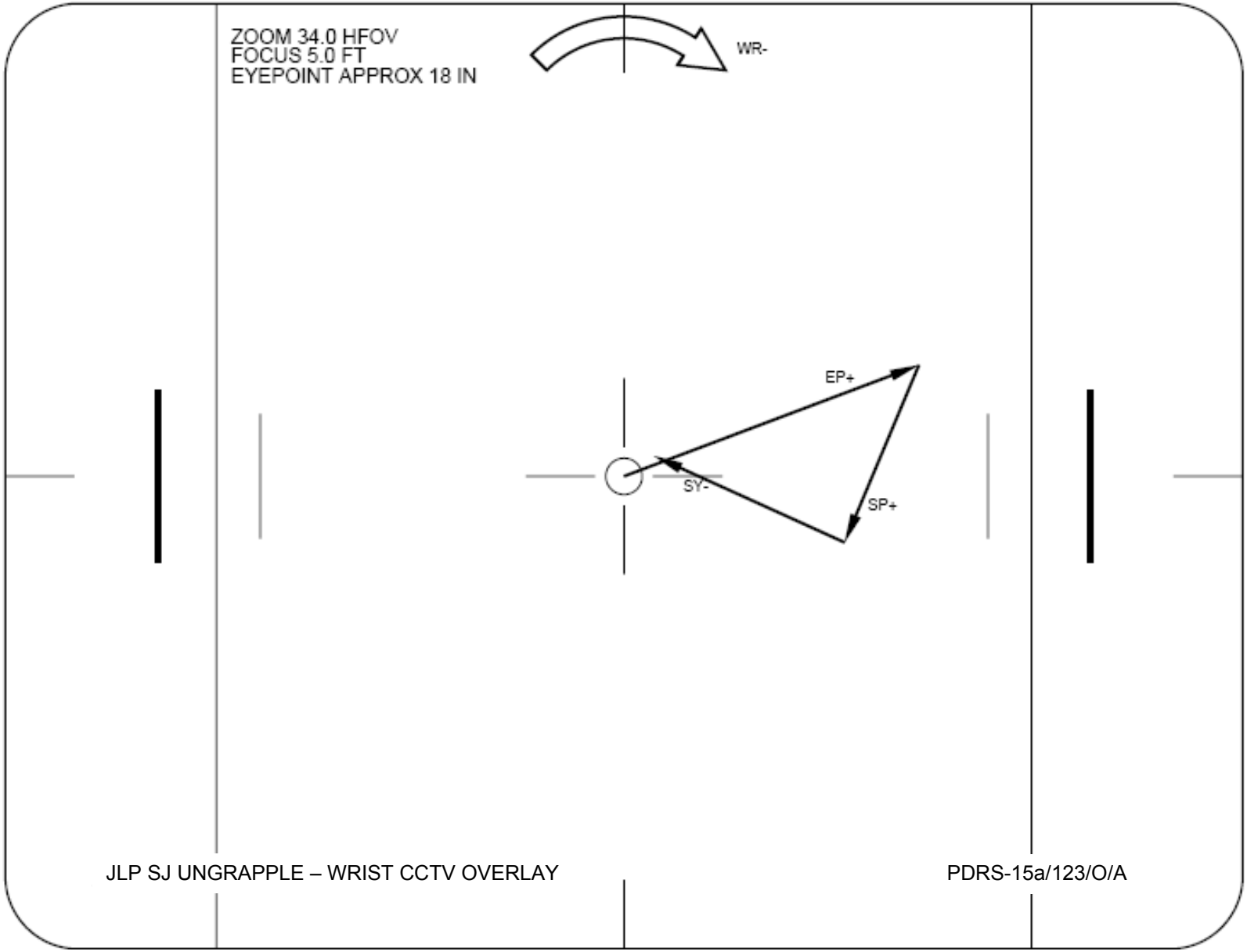

JLP SJ UNGRAPPLE – WRIST CCTV OVERLAY

PDRS-15a/123/O/A

(reduced copy)

Fabricate as transparency

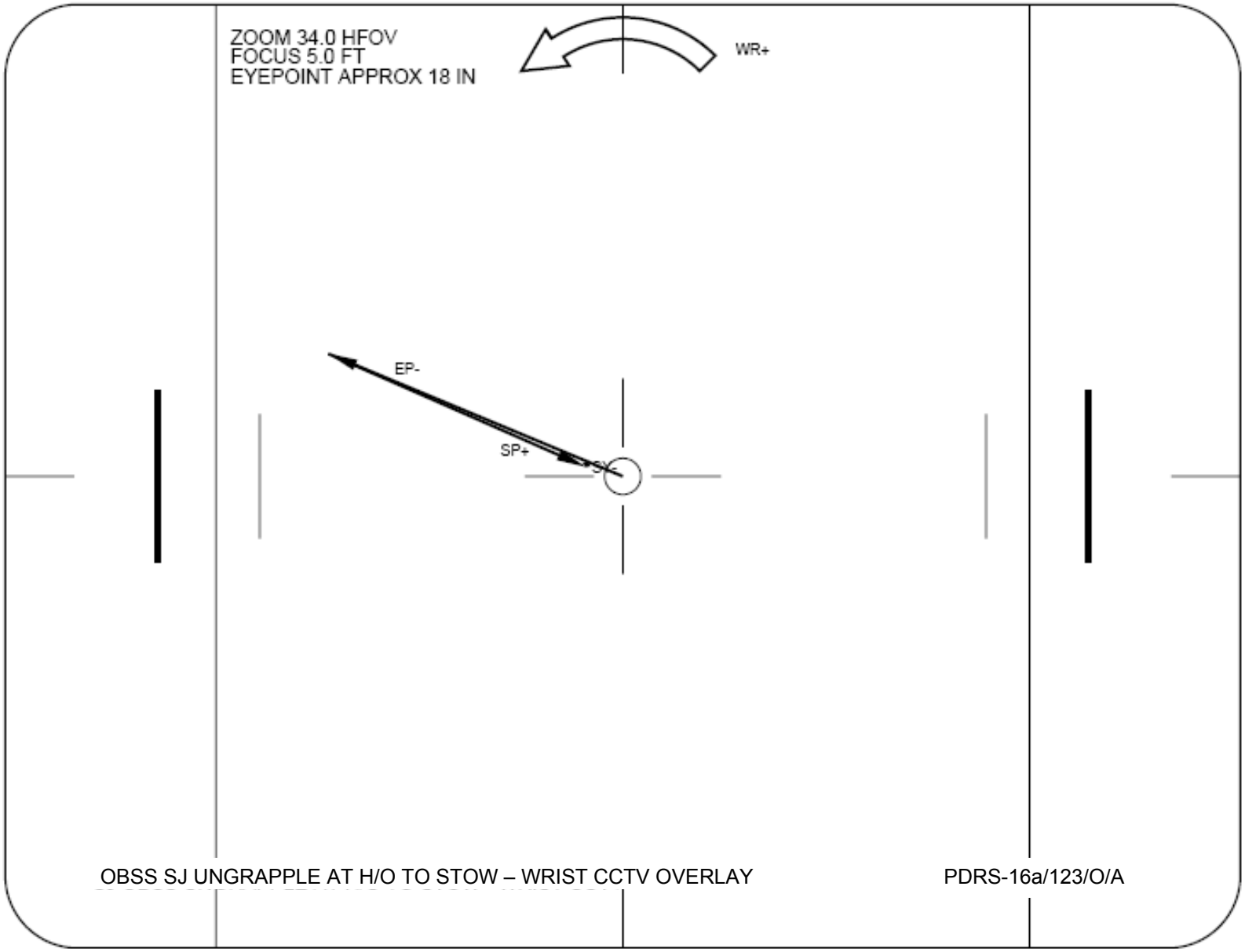

OBSS SJ UNGRAPPLE AT H/O TO STOW – WRIST CCTV OVERLAY

PDRS-16a/123/O/A

(reduced copy)

Fabricate as transparency

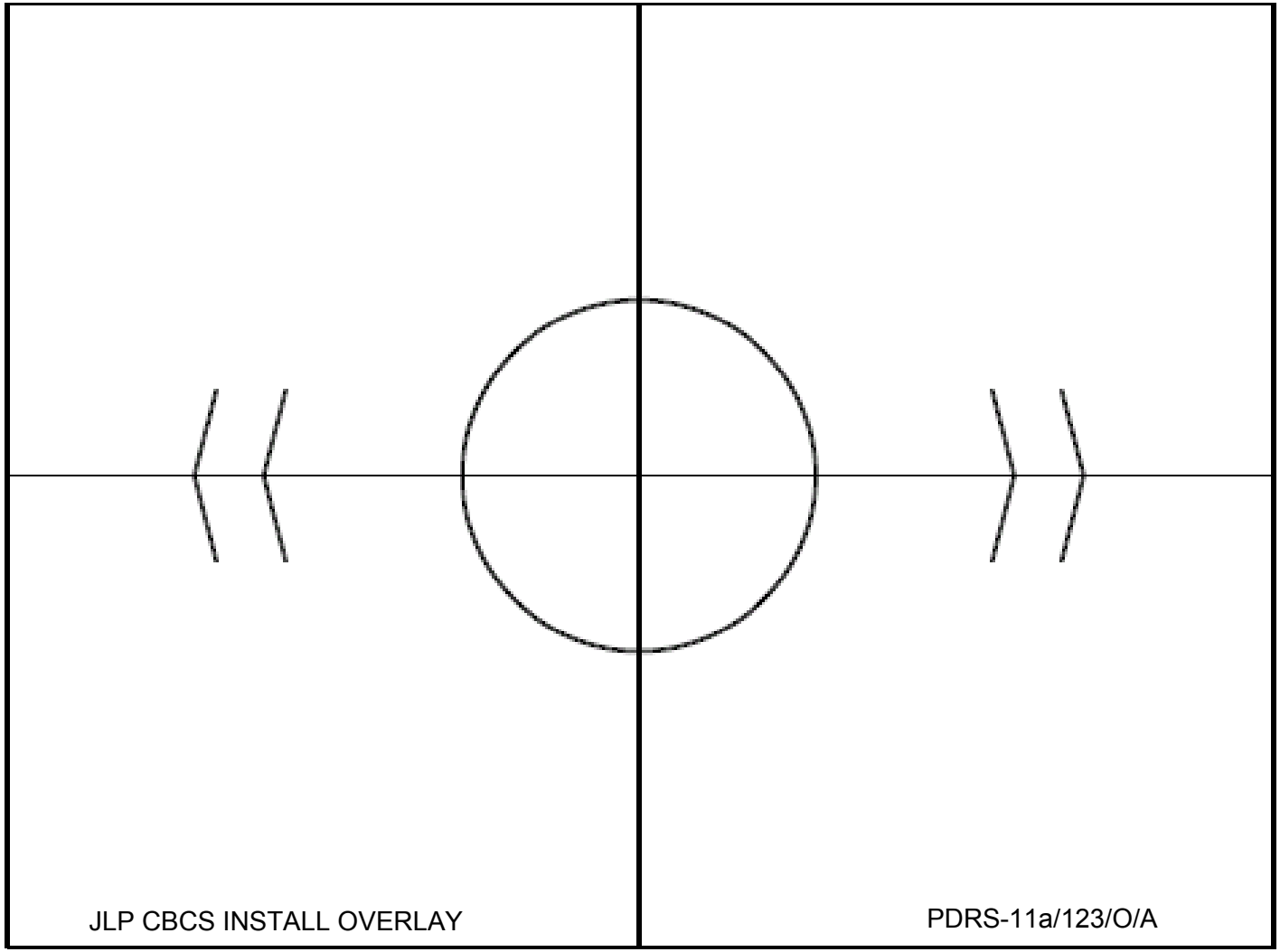

Fabricate as transparency

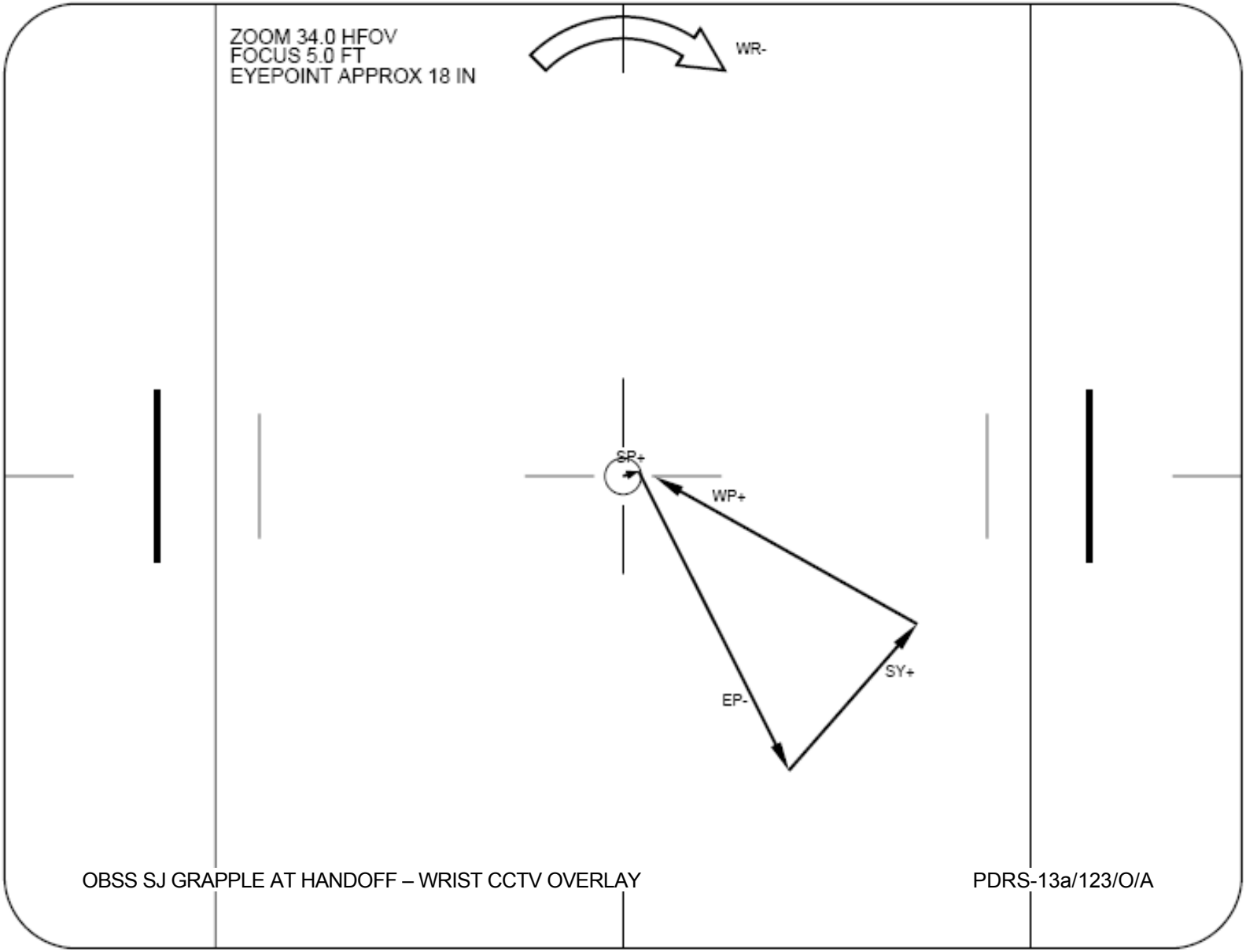

OBSS SJ GRAPPLE AT HANDOFF – WRIST CCTV OVERLAY

PDRS-13a/123/O/A

(reduced copy)

TOP

HOOK
VELCRO

OBSS LDRI SCAN PATTERN CUE CARD – DOCKED STBD & PORT

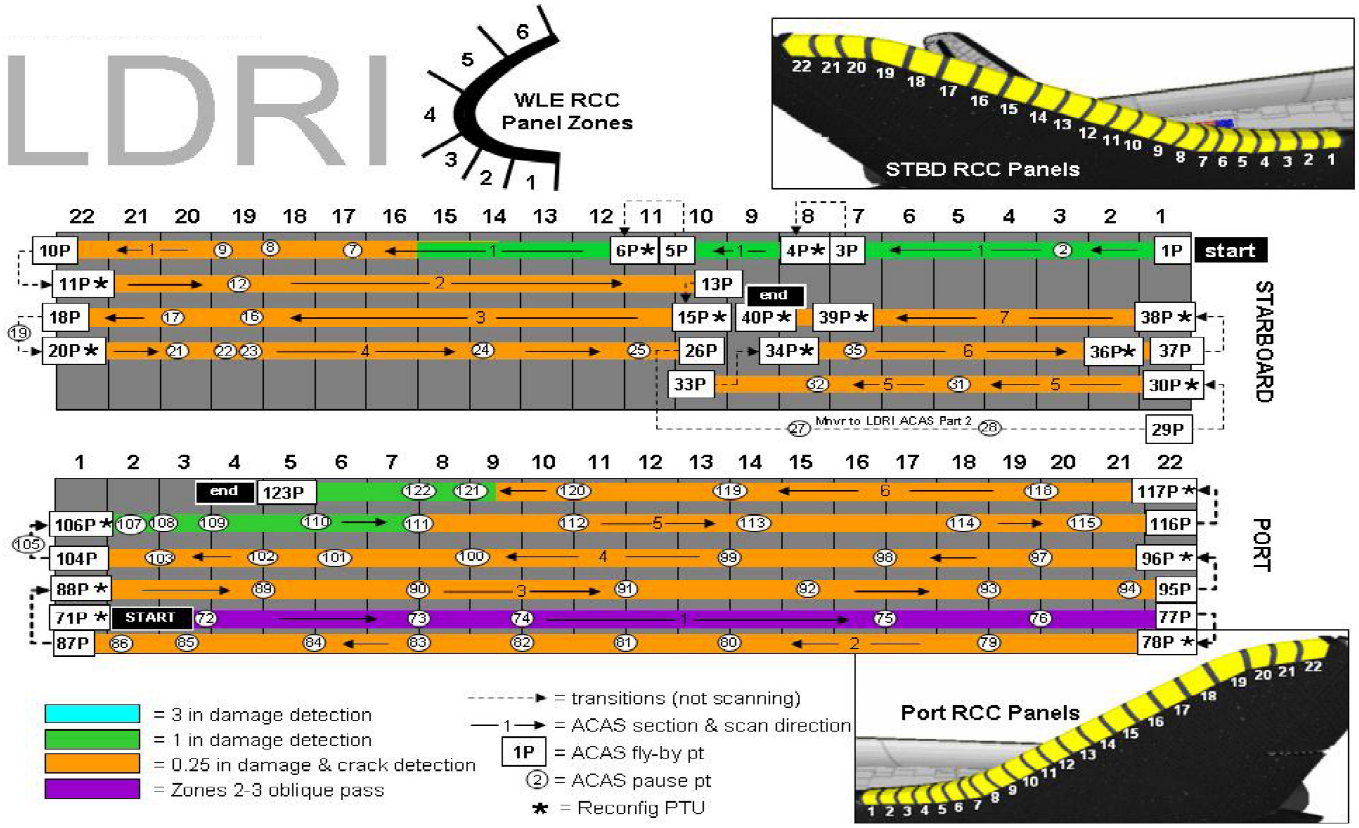

(reduced copy)

PDRS-12a/123/O/A

TOP
Back of 'OBSS LDRI SCAN PATTERN CUE CARD – DOCKED STBD & PORT'

HOOK
VELCRO

OBSS LDRI SCAN PATTERN CUE CARD – DOCKED NOSE CAP

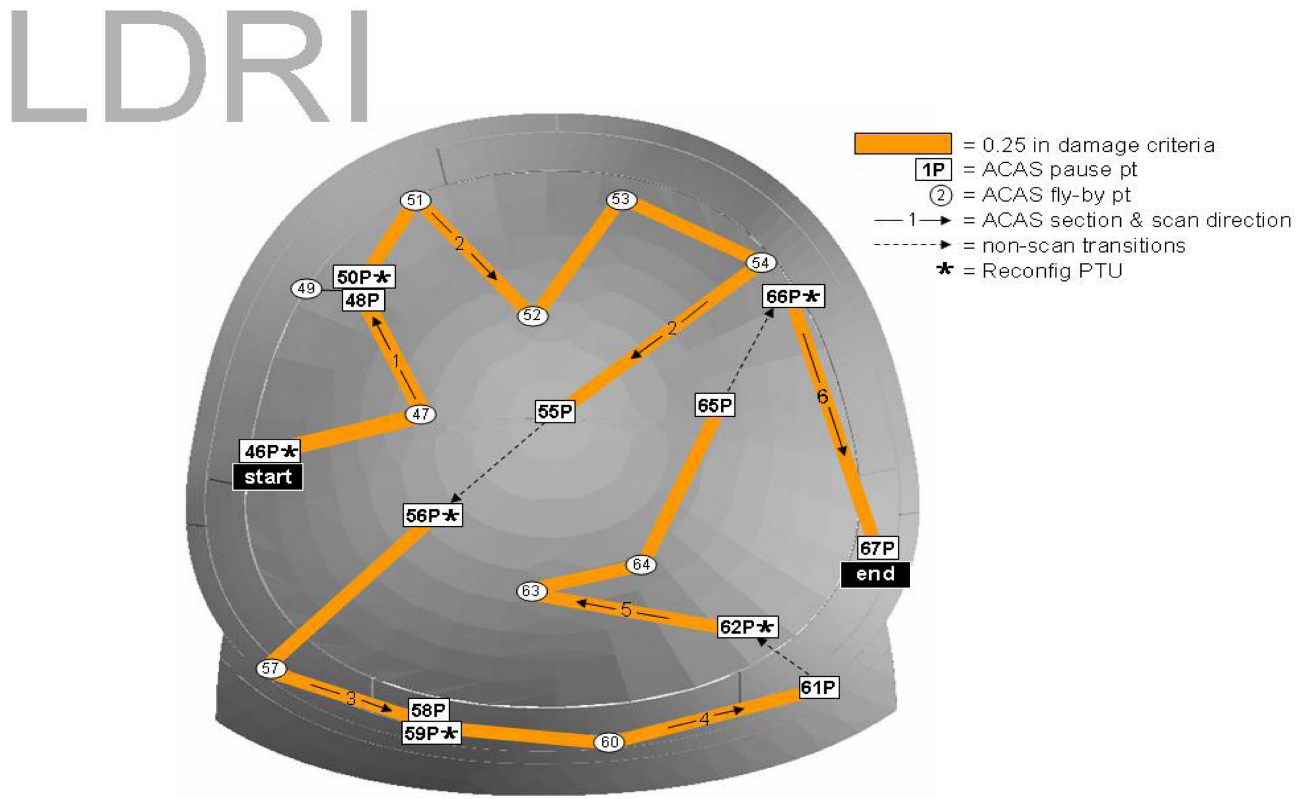

PDRS-12b/123/O/A

(reduced copy)

This Page Intentionally Blank

Space Shuttle Program
FLIGHT DATA FILE

JSC-48040-123
FINAL

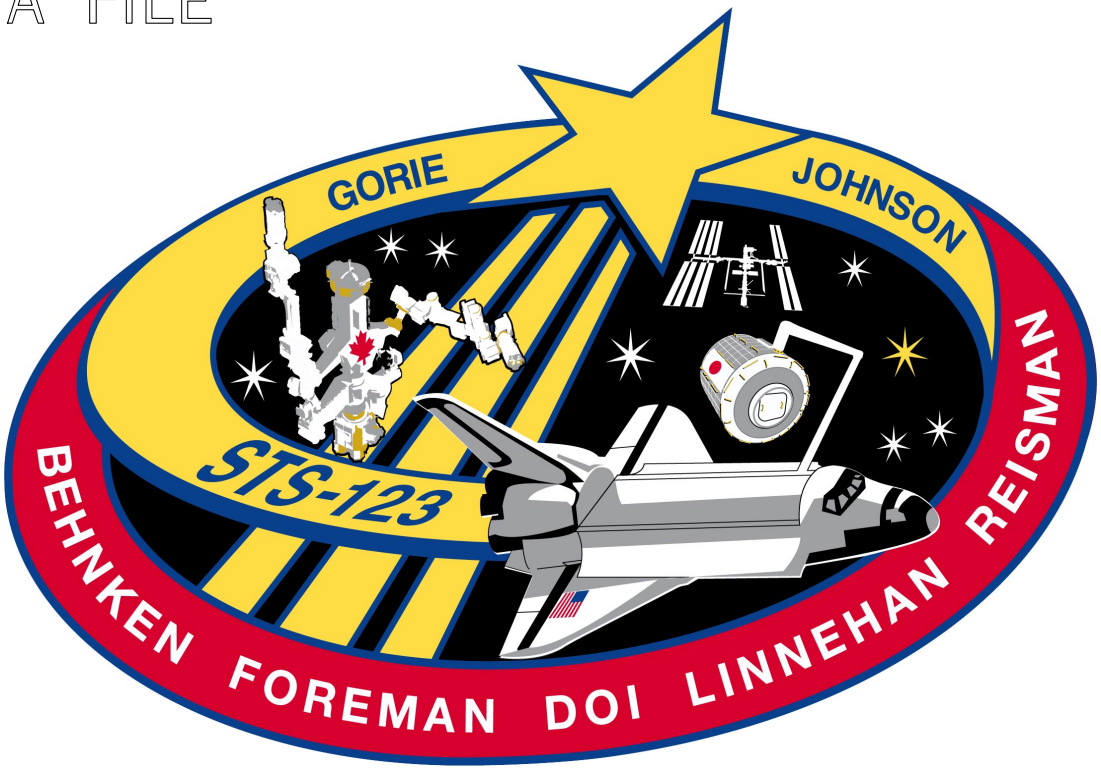

PDRS OPS C/L

STS
123

Flight Cover (trim bottom to expose tabs)