ORM CAMERA VIEWS

ORM CAMERA VIEWS..... FS 7-2

ORM CAMERA VIEWS

Docked Posn / PMA2 Grapple Posn

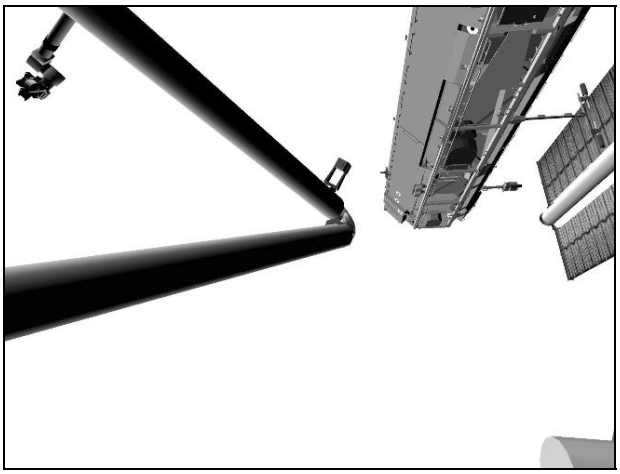

CCTV A (84,22)

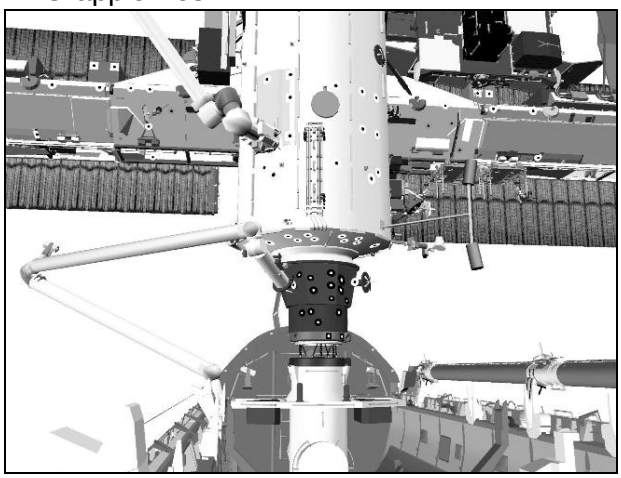

CCTV B (7,12)

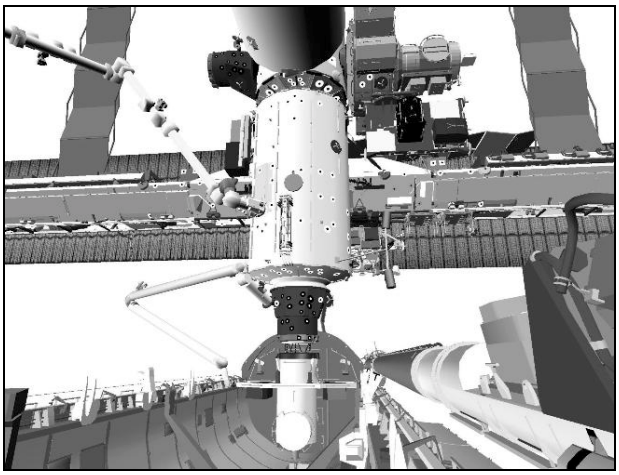

CCTV C (-6,17)

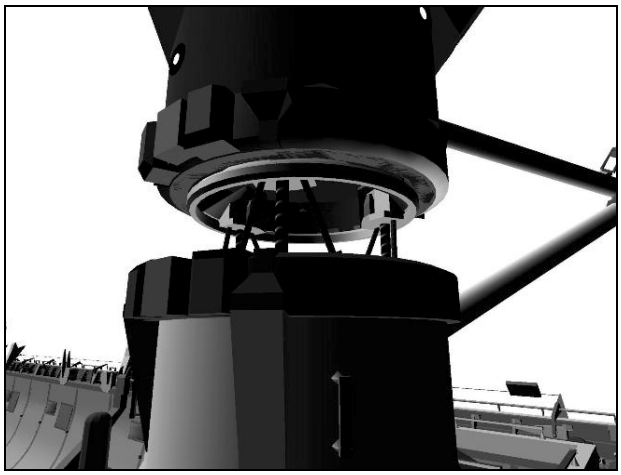

CCTV D (51,14)

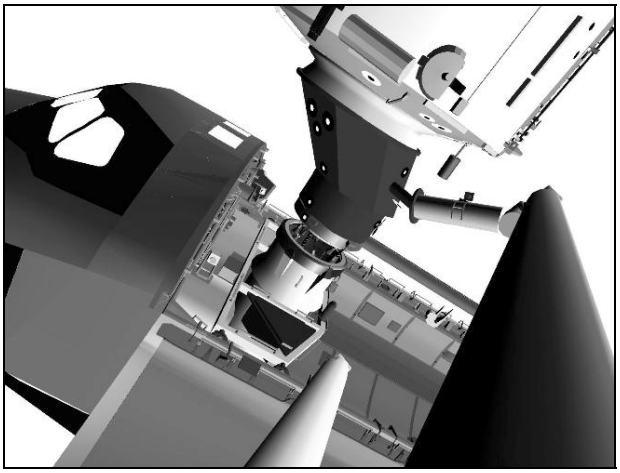

ELBOW (-30,-11)

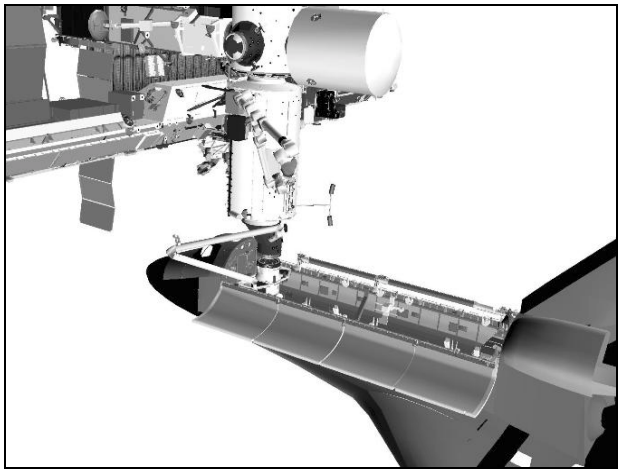

BIRD'S EYE

ORM: ACAS to Overnight Park Posn, Pt 1
Reverse ORM: ACAS to Undocked Posn, Pt 26

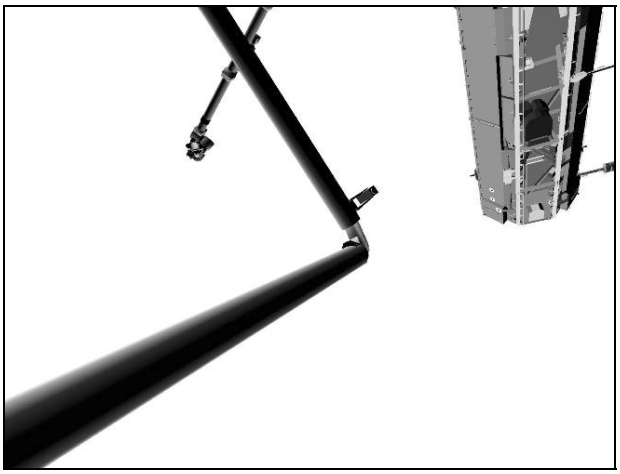

CCTV A (67,37)

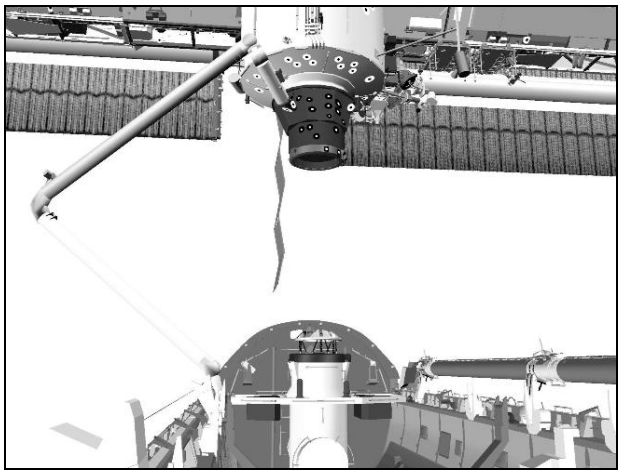

CCTV B (7,12)

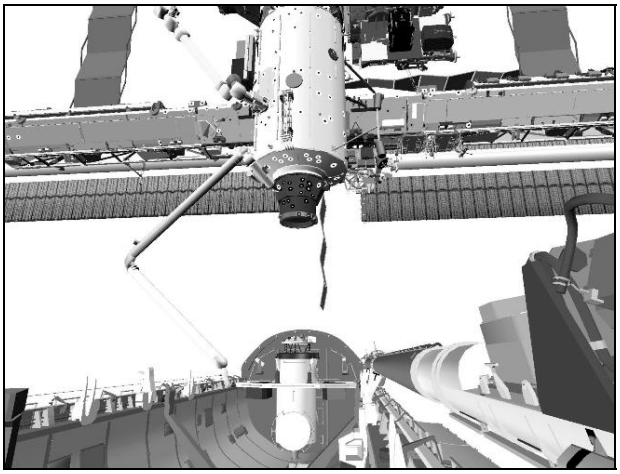

CCTV C (-6,17)

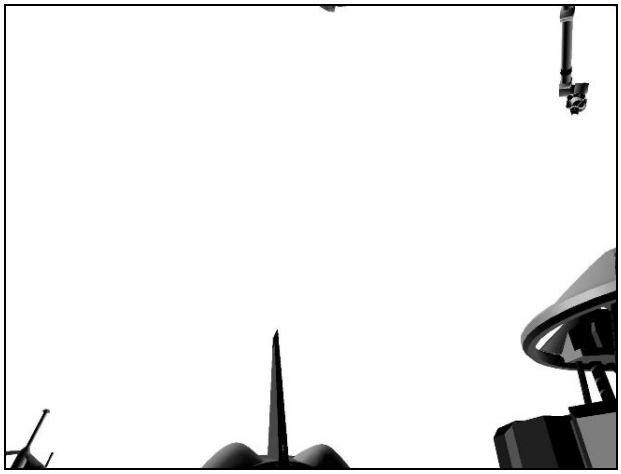

CCTV D (9,33)

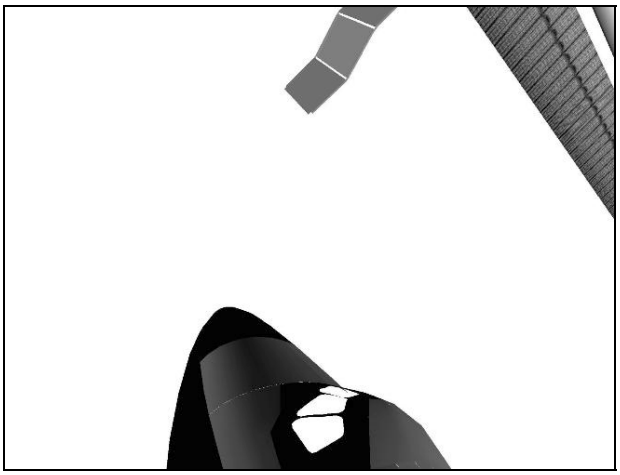

ELBOW (-84,13)

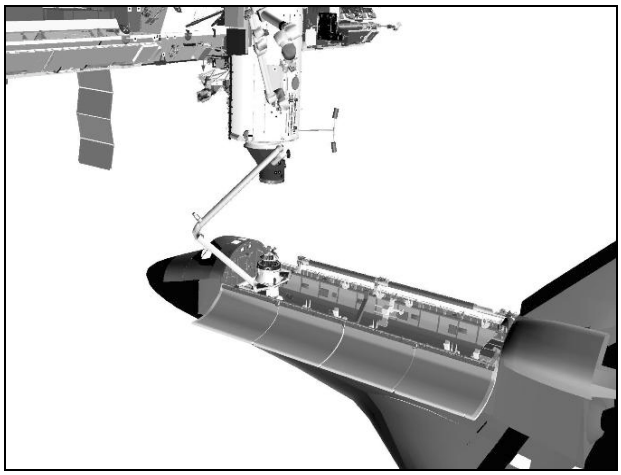

BIRD'S EYE

ORM: ACAS to Overnight Park Posn, Pt 2
Reverse ORM: ACAS to Undocked Posn, Pt 25

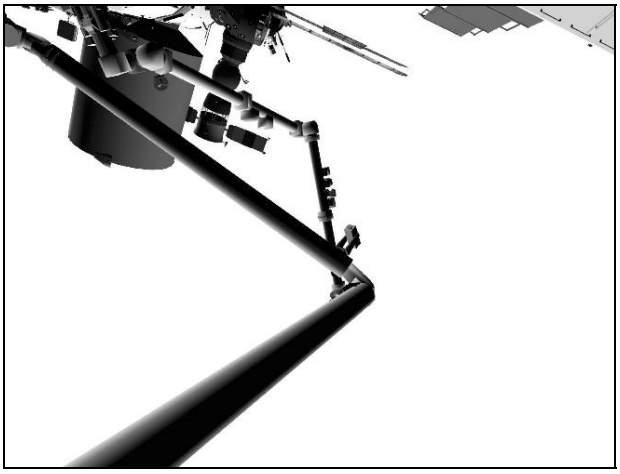

CCTV A (66,54)

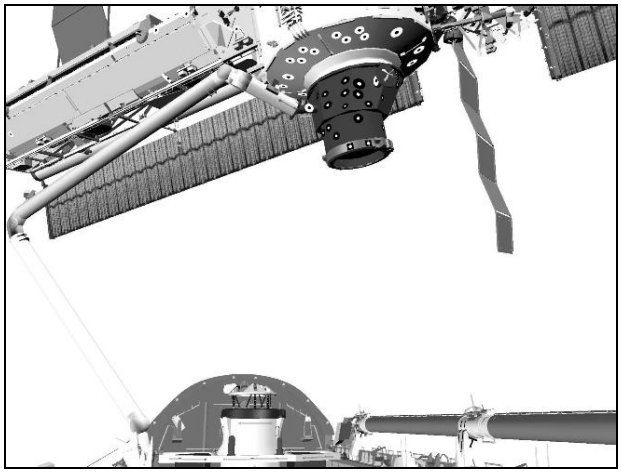

CCTV B (13,17)

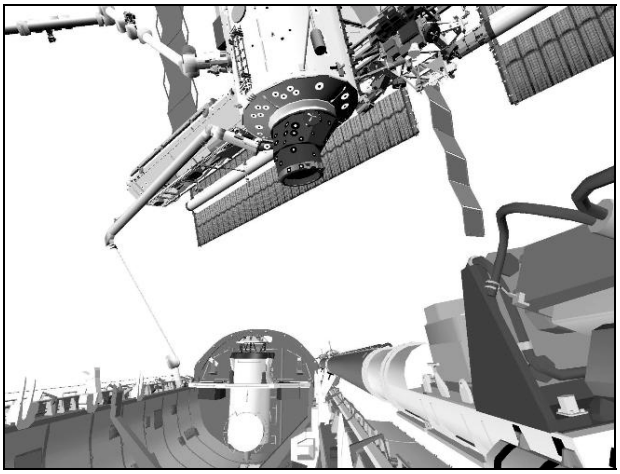

CCTV C (0,17)

CCTV D (9,33)

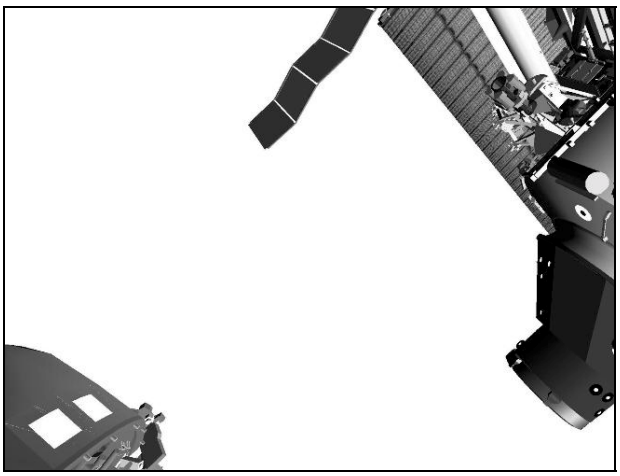

ELBOW (-50,7)

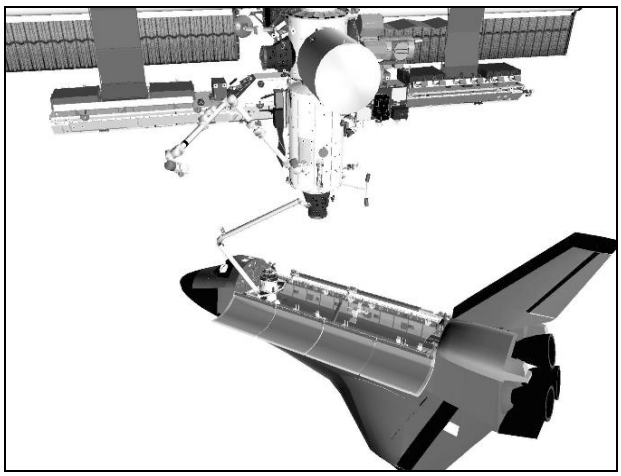

BIRD'S EYE

ORM: ACAS to Overnight Park Posn, Pt 3
Reverse ORM: ACAS to Undocked Posn, Pt 24

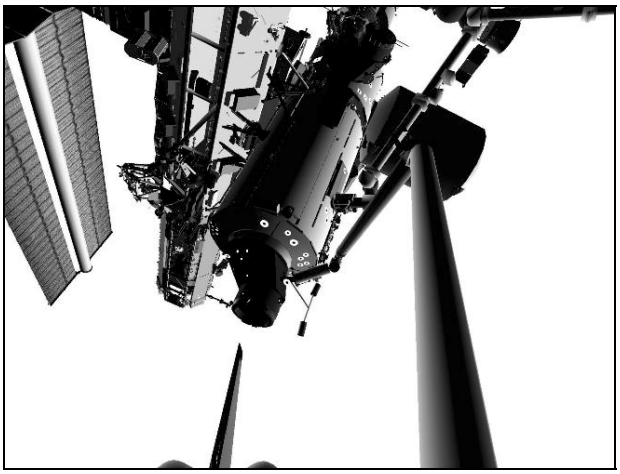

CCTV A (6,35)

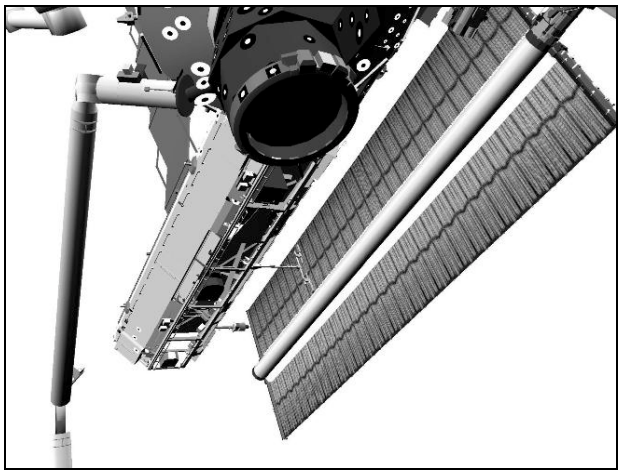

CCTV B (14,41)

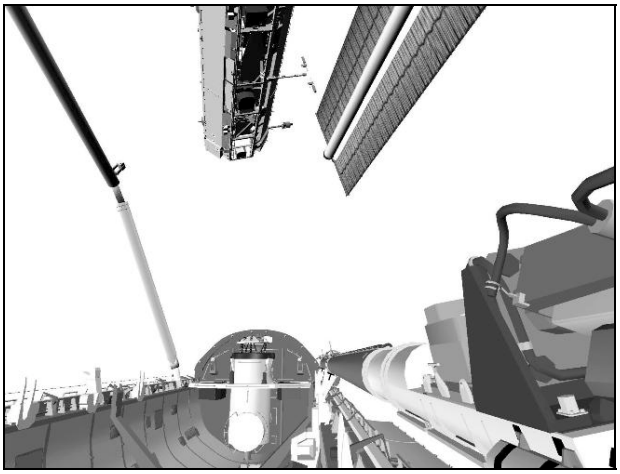

CCTV C (0,17)

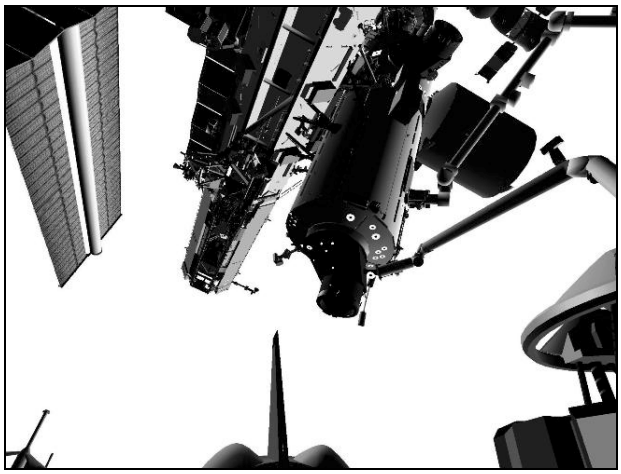

CCTV D (9,33)

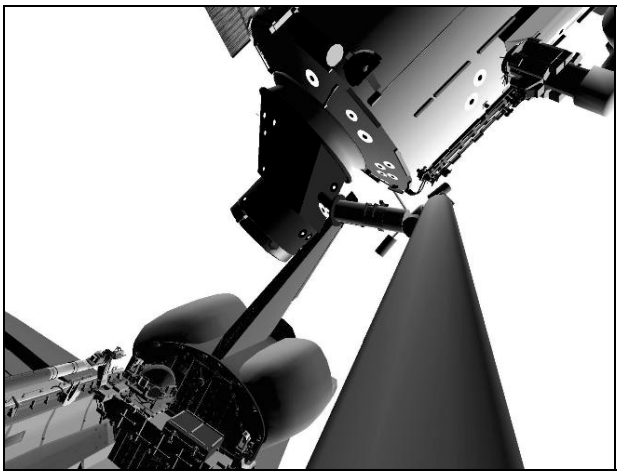

ELBOW (-18,-10)

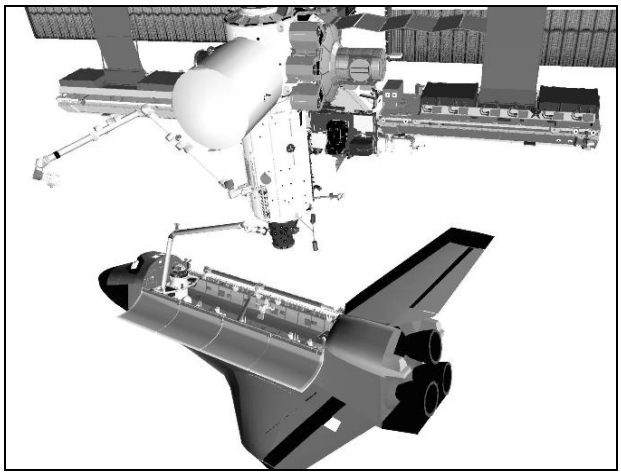

BIRD'S EYE

ORM: ACAS to Overnight Park Posn, Pt 4
Reverse ORM: ACAS to Undocked Posn, Pt 23

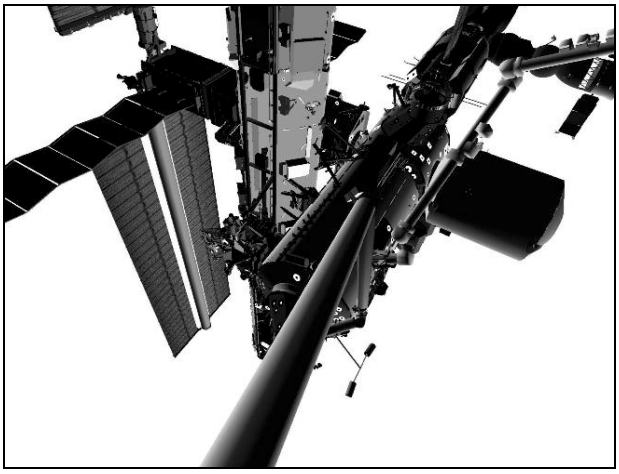

CCTV A (35,38)

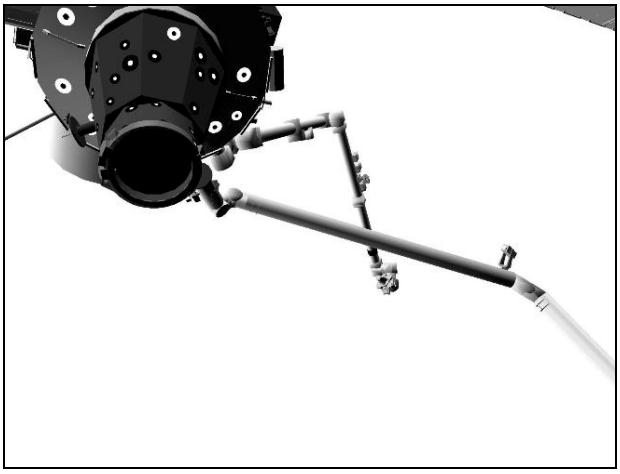

CCTV B (-36,26)

CCTV C (0,22)

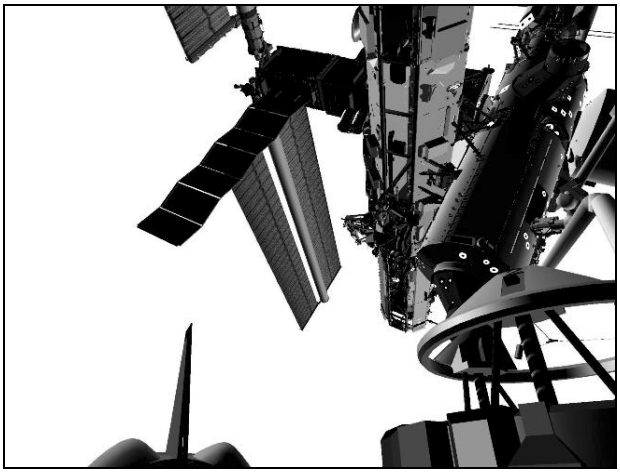

CCTV D (21,33)

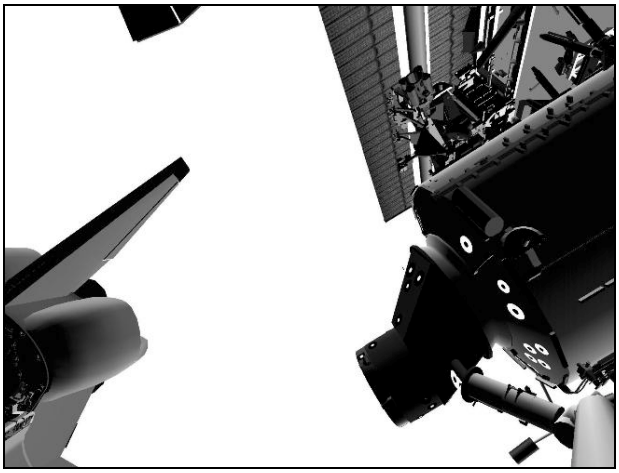

ELBOW (-33,16)

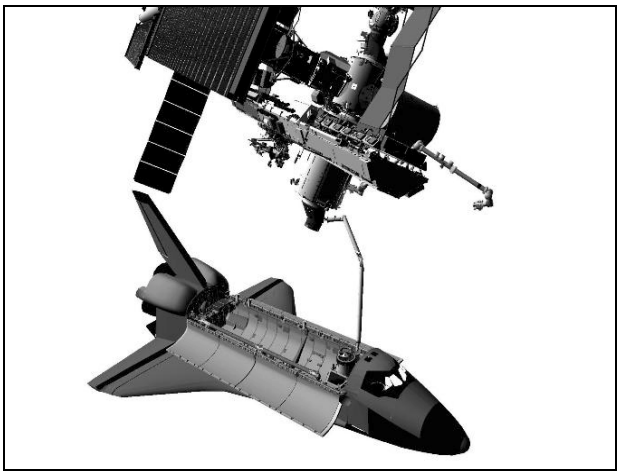

BIRD'S EYE

ORM: ACAS to Overnight Park Posn, Pt 5
Reverse ORM: ACAS to Undocked Posn, Pt 22

CCTV A (21,11)

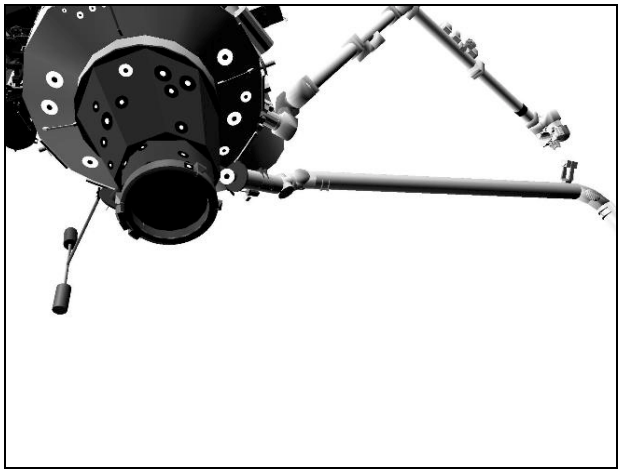

CCTV B (-39,19)

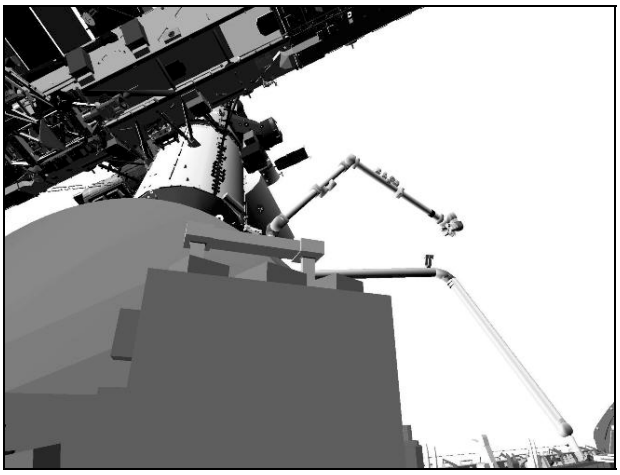

CCTV C (-47,25)

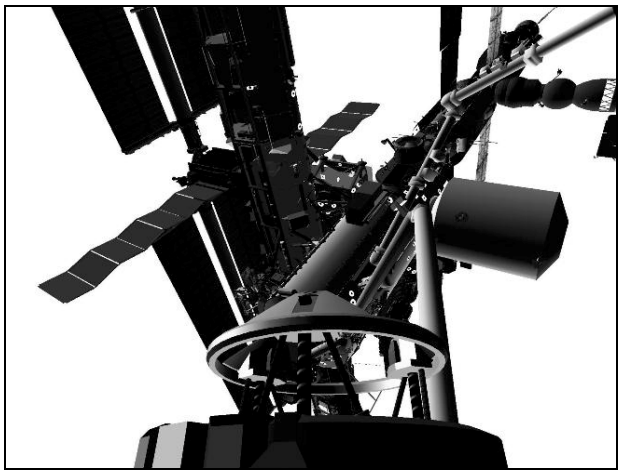

CCTV D (48,33)

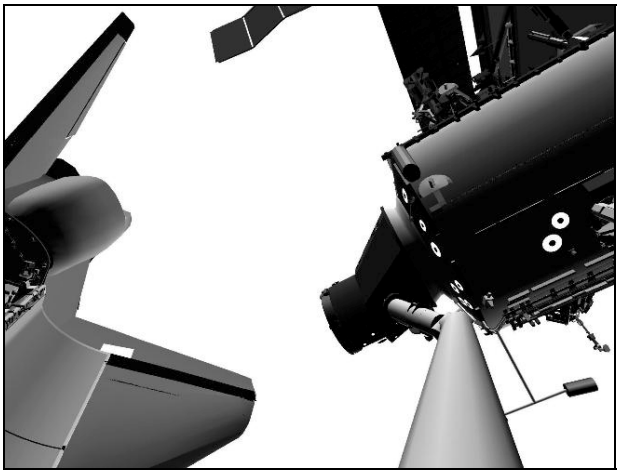

ELBOW (-20,6)

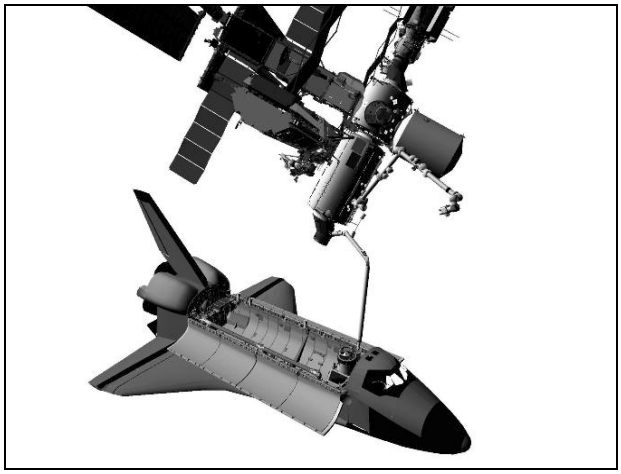

BIRD'S EYE

ORM: ACAS to Overnight Park Posn, Pt 6
Reverse ORM: ACAS to Undocked Posn, Pt 21

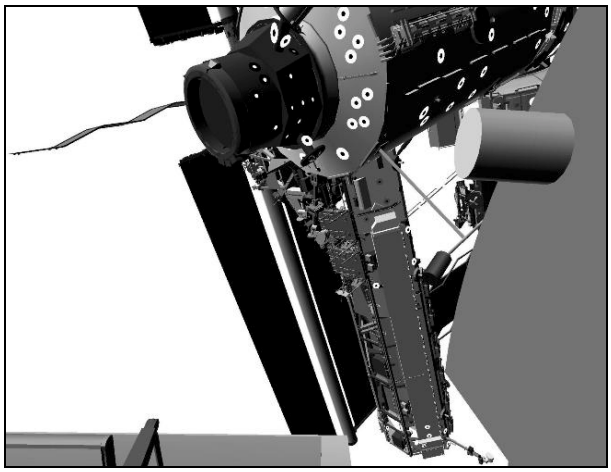

CCTV A (89,-7)

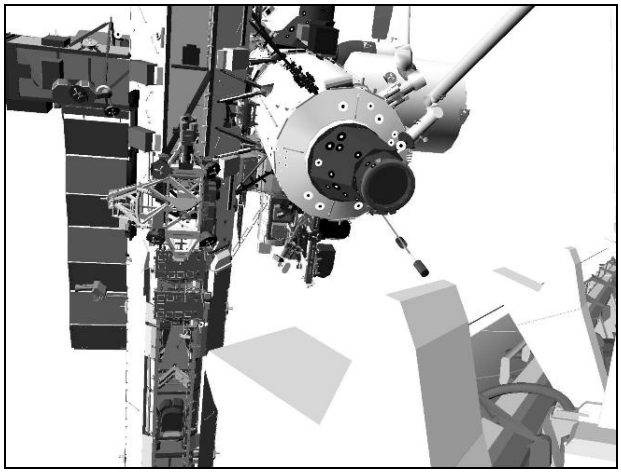

CCTV B (-29,-1)

CCTV C (-12,22)

CCTV D (66,13)

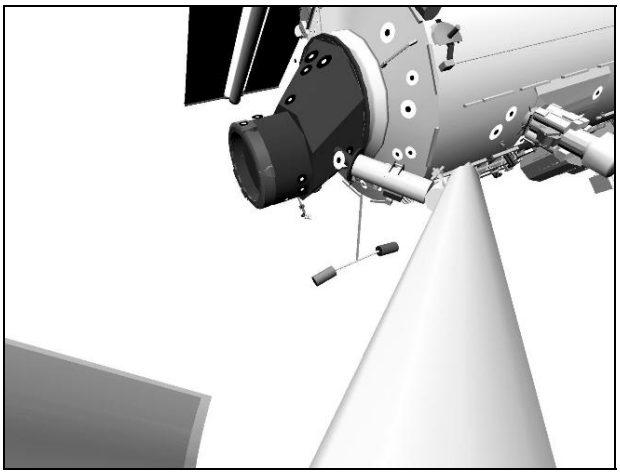

ELBOW (-21,-14)

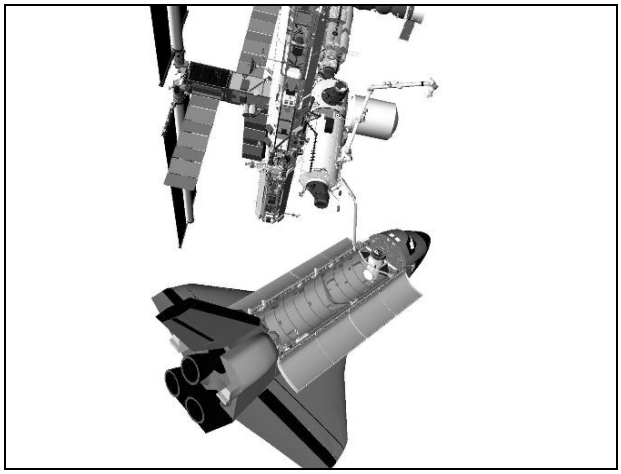

BIRD'S EYE

ORM: ACAS to Overnight Park Posn, Pt 7
Reverse ORM: ACAS to Undocked Posn, Pt 20

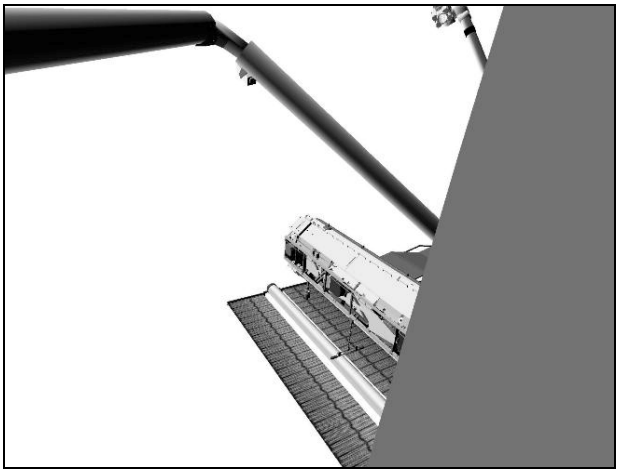

CCTV A (105,28)

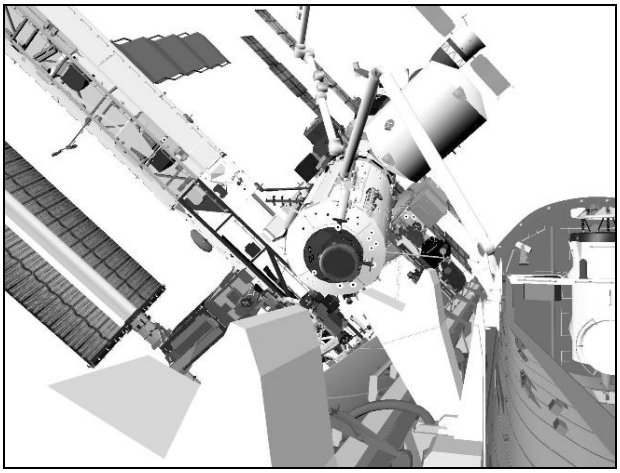

CCTV B (-18,1)

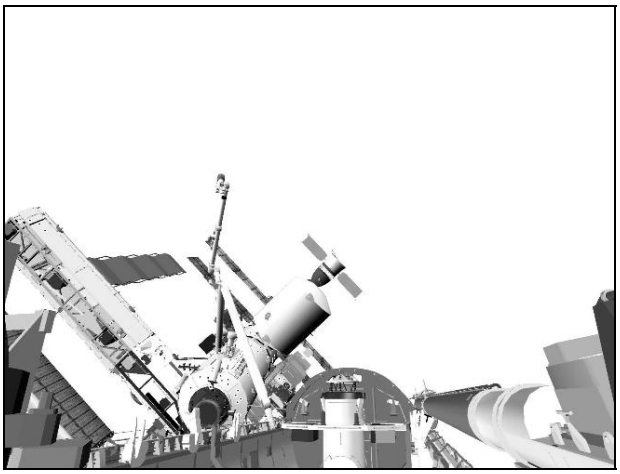

CCTV C (-12,22)

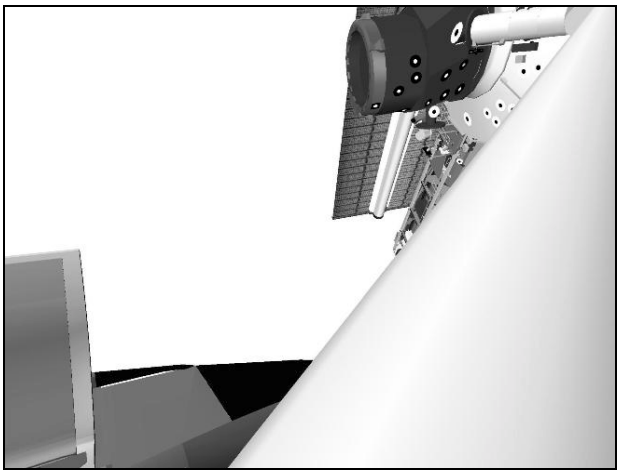

ELBOW (-34,-37)

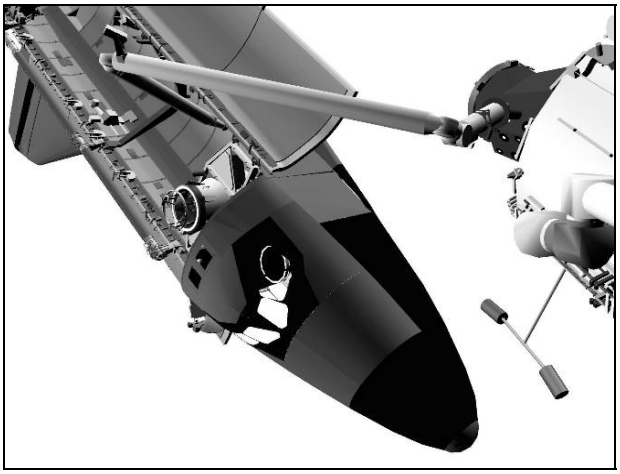

SSRMS TIP ELBOW (103,-11)

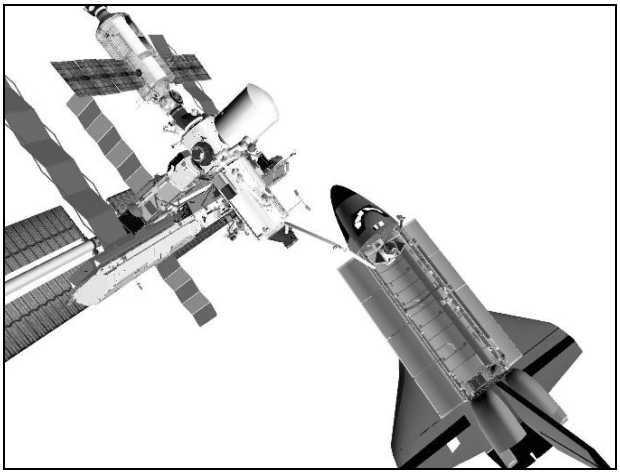

BIRD'S EYE

ORM: ACAS to Overnight Park Posn, Pt 8
Reverse ORM: ACAS to Undocked Posn, Pt 19

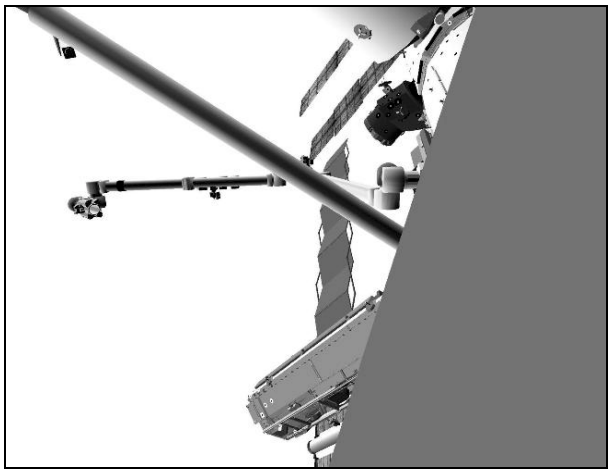

CCTV A (115,46)

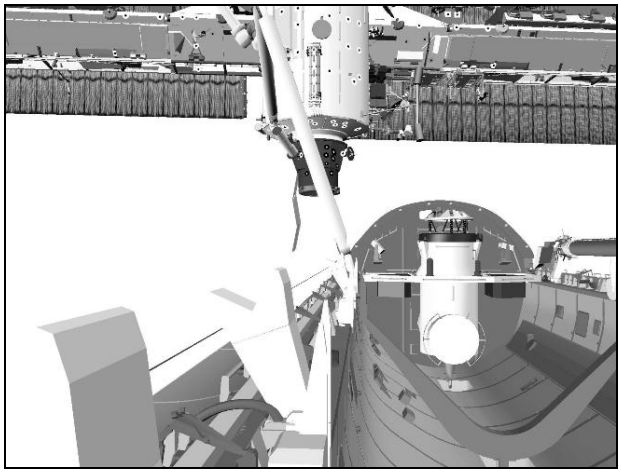

CCTV B (-5,1)

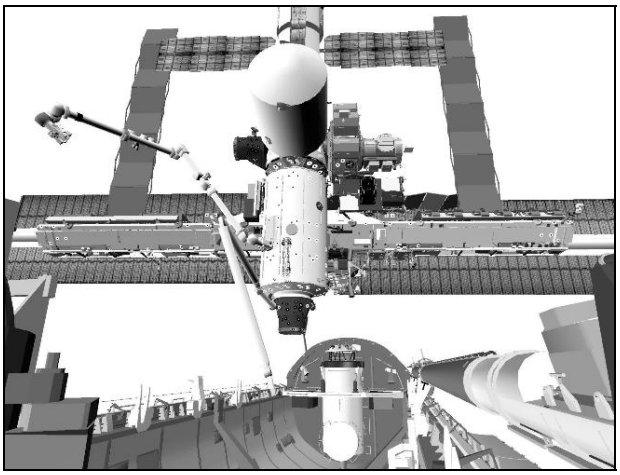

CCTV C (-12,18)

ELBOW (-34,-37)

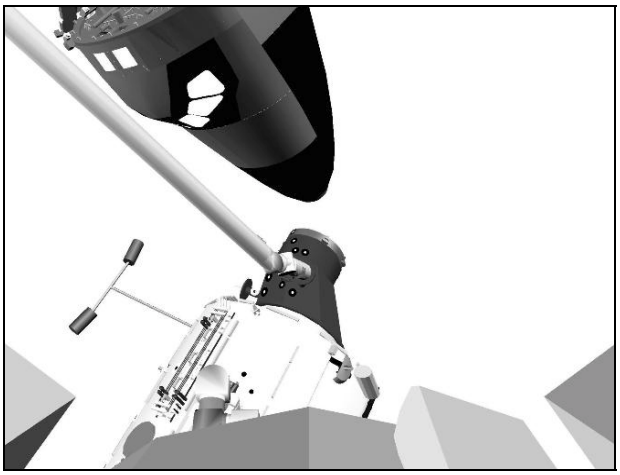

SSRMS TIP LEE

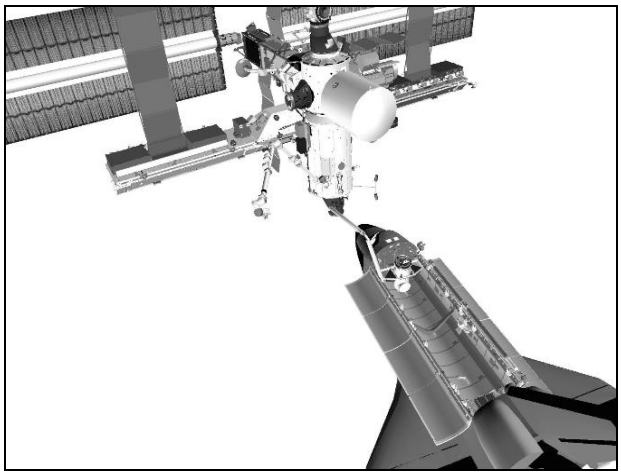

BIRD'S EYE

ORM: ACAS to Repair Posn, Pt 9
Reverse ORM: ACAS to Overnight Park Posn, Pt 18

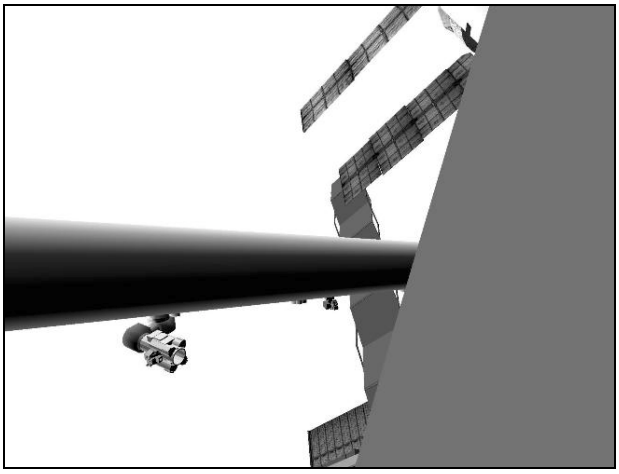

CCTV A (111,41)

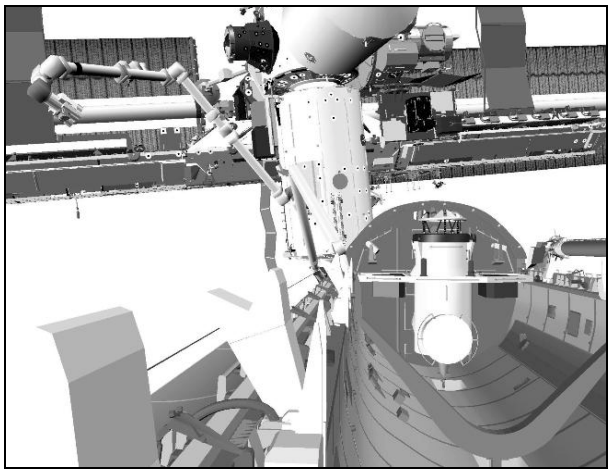

CCTV B (-5,1)

CCTV C (-12,18)

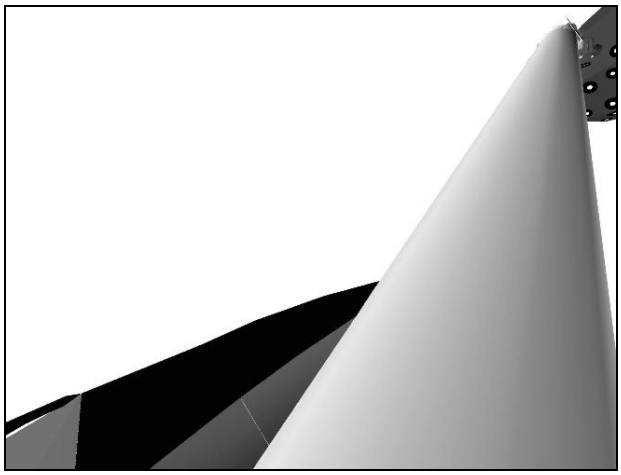

ELBOW (-29,-31)

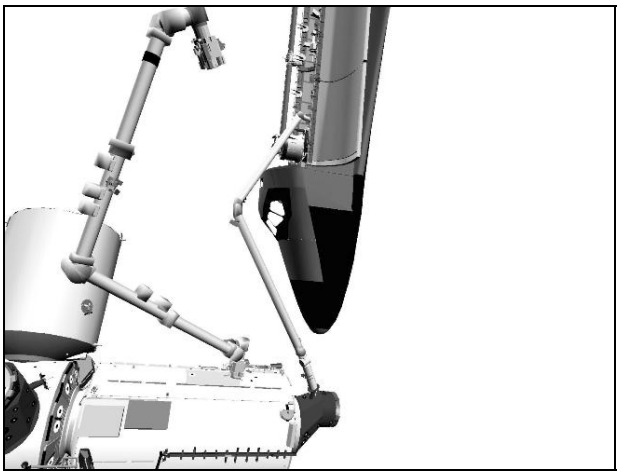

P1LOOB (21,27)

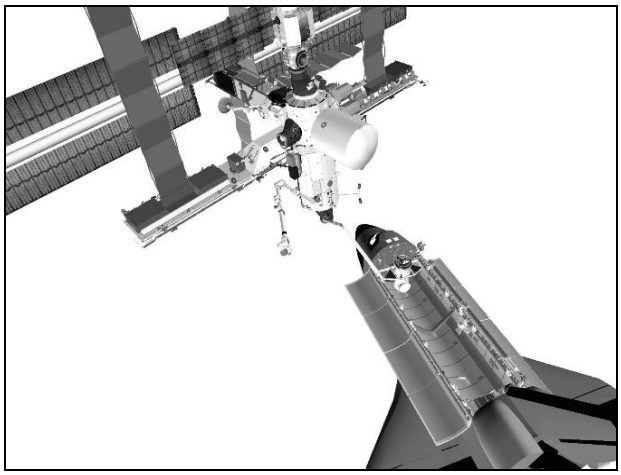

BIRD'S EYE

ORM: ACAS to Repair Posn, Pt 10
Reverse ORM: ACAS to Overnight Park Posn, Pt 17

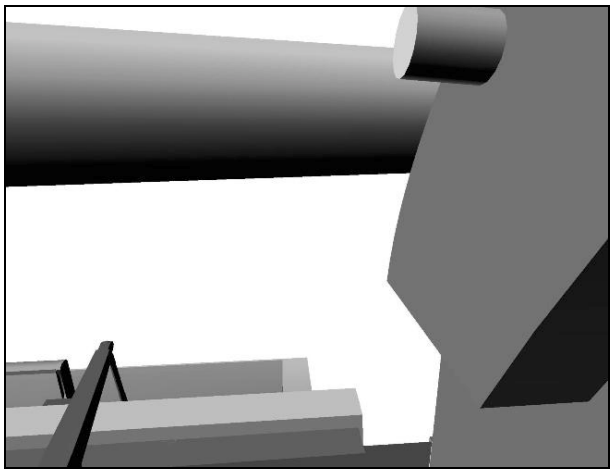

CCTV A (95,-16)

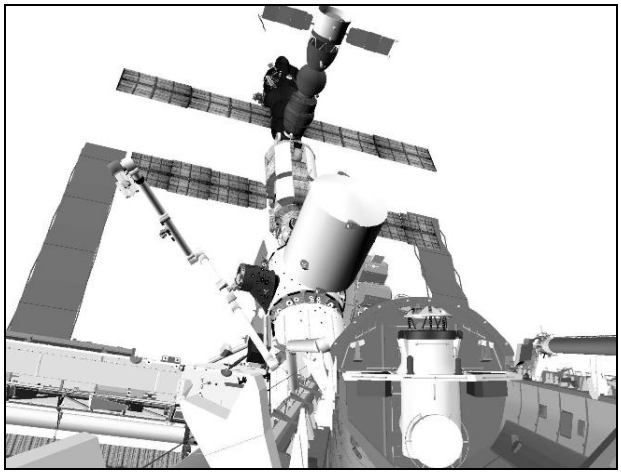

CCTV B (-3,10)

ELBOW (-34,-37)

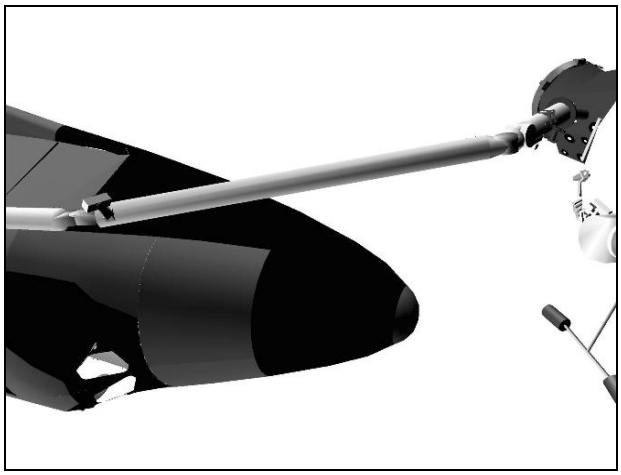

SSRMS TIP ELBOW (98,-11)

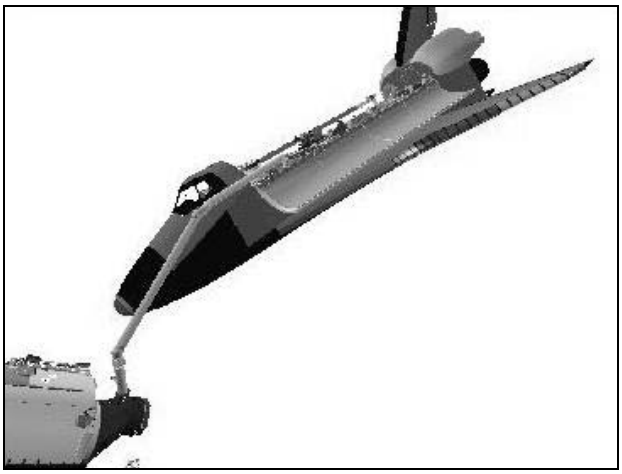

P1LOOB (45,28)

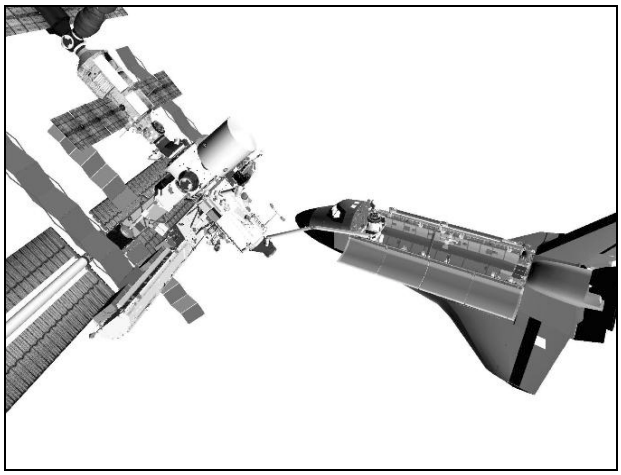

BIRD'S EYE

ACAS to Repair Posn, Pt 11
Reverse ORM: ACAS to Overnight Park Posn, Pt 16

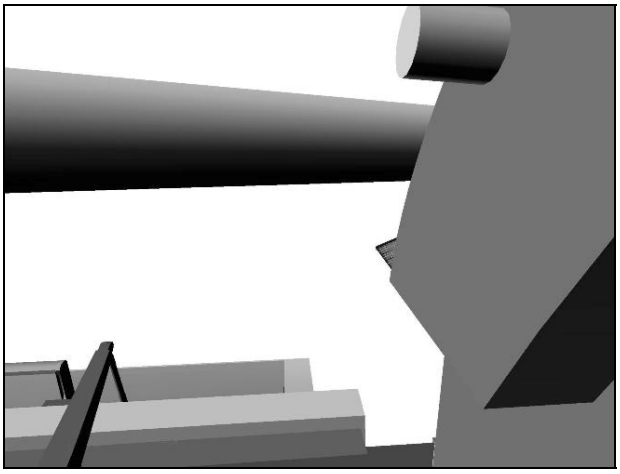

CCTV A (95,-16)

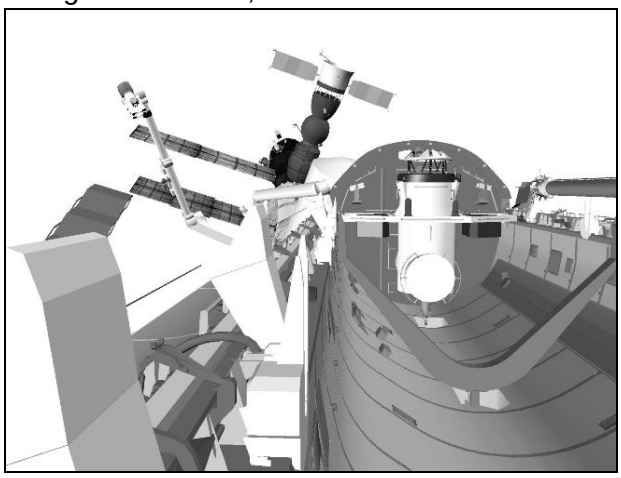

CCTV B (-3,-5)

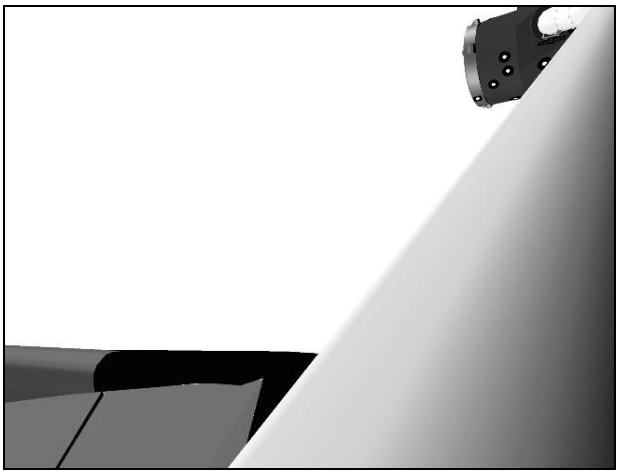

ELBOW (-34,-37)

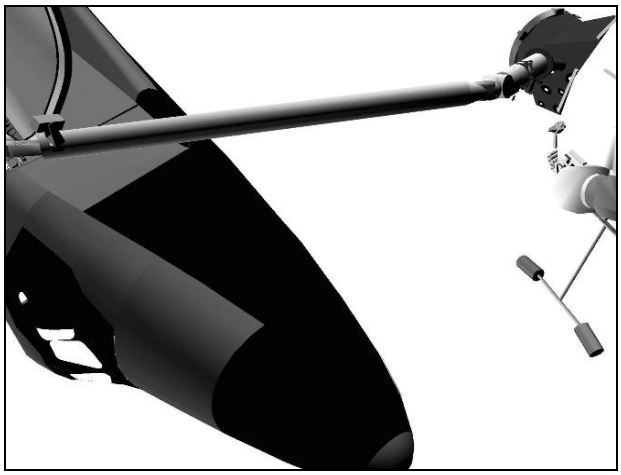

SSRMS TIP ELBOW (100,-15)

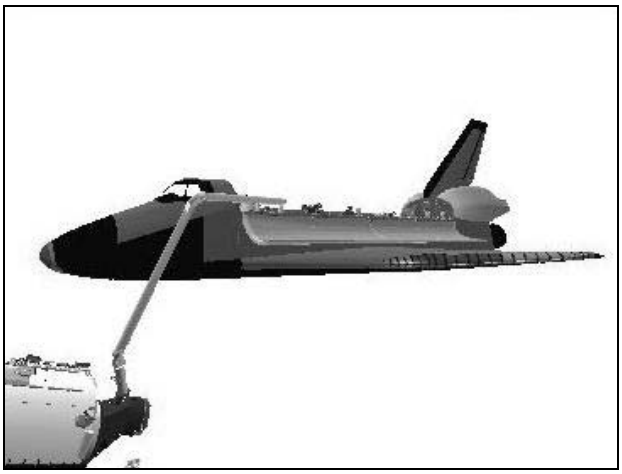

P1LOOB (45,28)

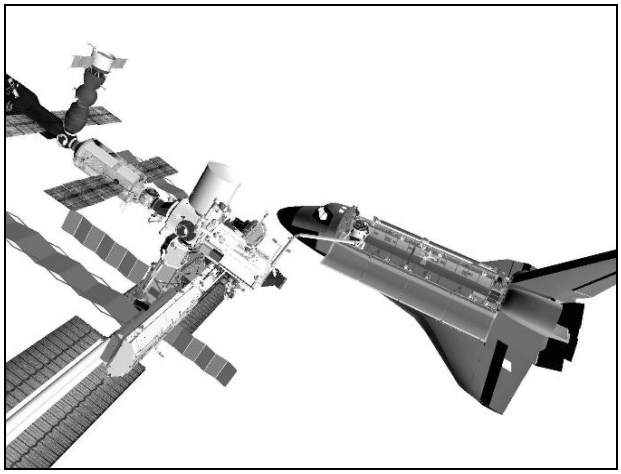

BIRD'S EYE

ACAS to Repair Posn, Pt 12
Reverse ORM: ACAS to Overnight Park Posn, Pt 15

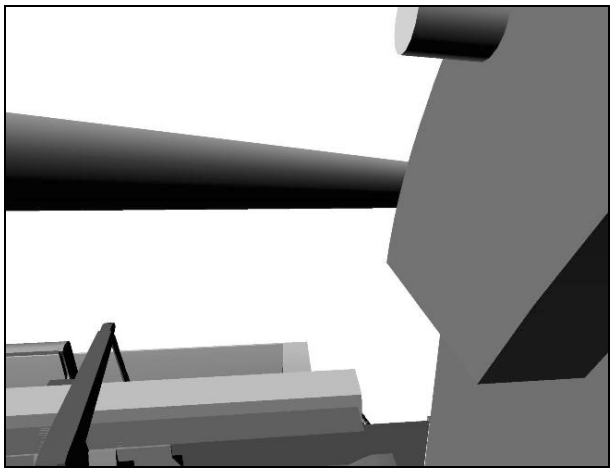

CCTV A (95,-18)

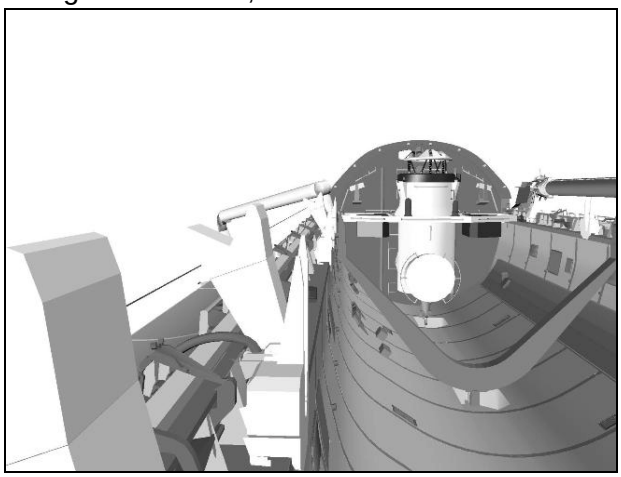

CCTV B (-3,-5)

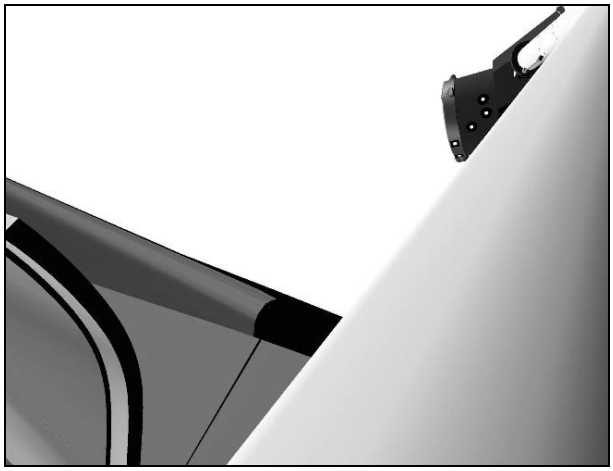

ELBOW (-34,-37)

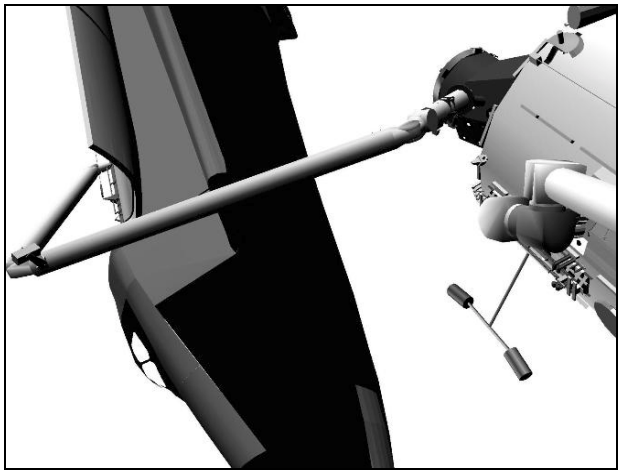

SSRMS TIP ELBOW (106,-12)

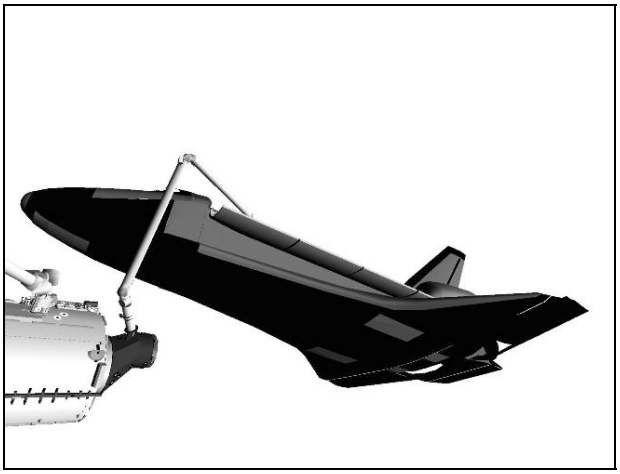

P1LOOB (45,20)

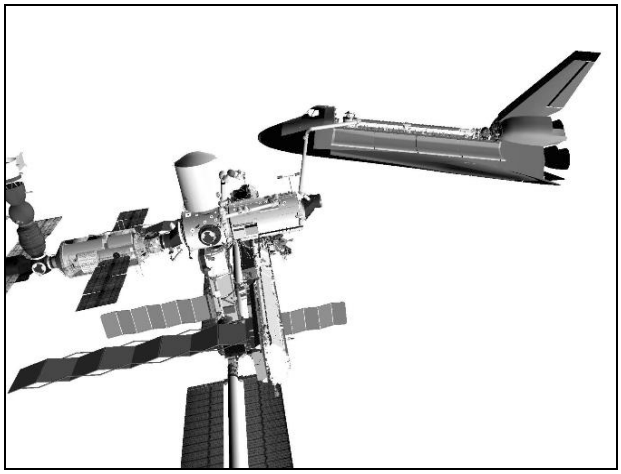

BIRD'S EYE

ACAS to Repair Posn, Pt 13
Reverse ORM: ACAS to Overnight Park Posn, Pt 14

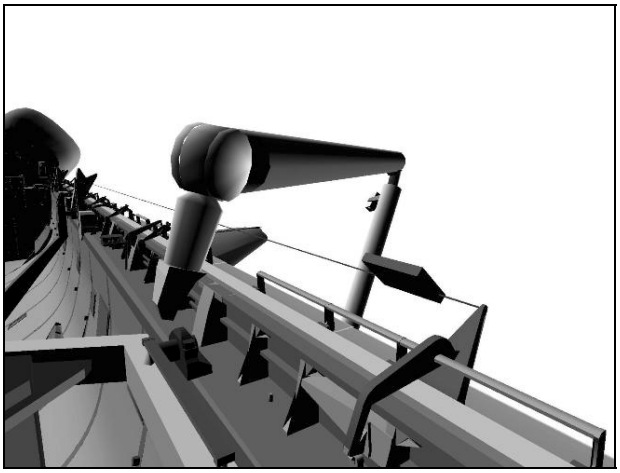

CCTV A (34,-10)

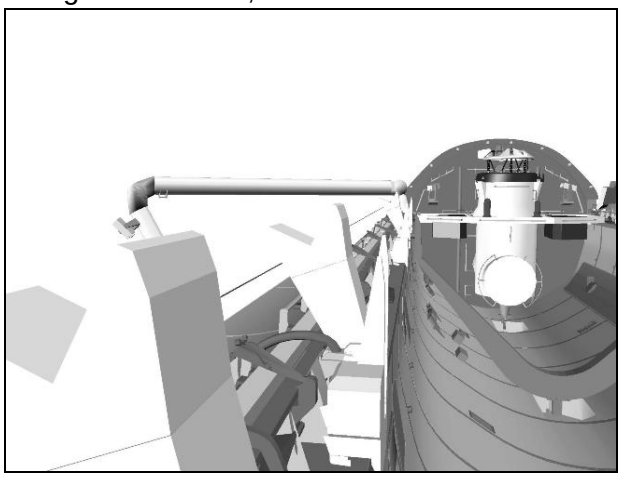

CCTV B (-10,-5)

ELBOW (-15,-9)

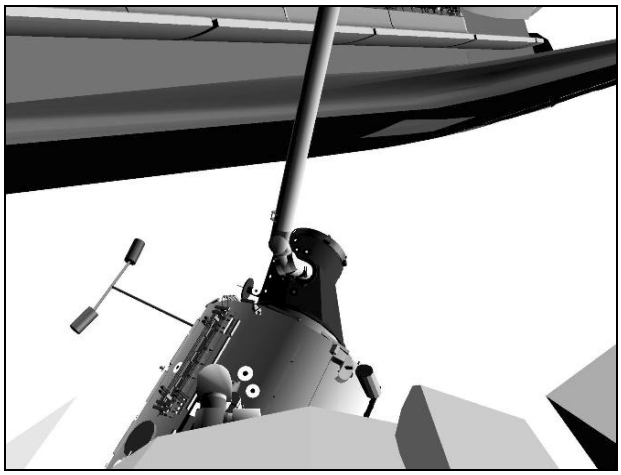

SSRMS TIP LEE

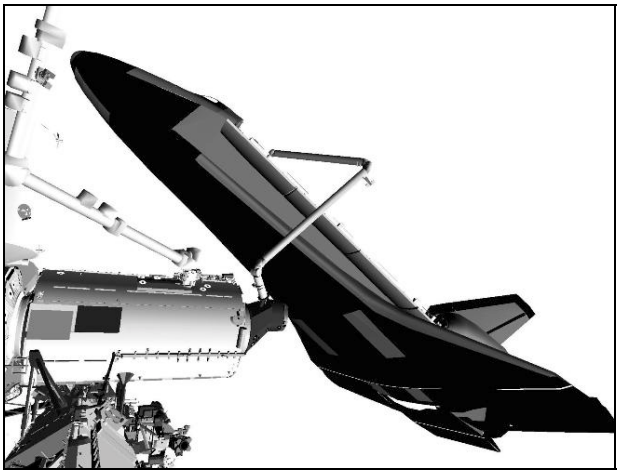

P1LOOB (28,15)

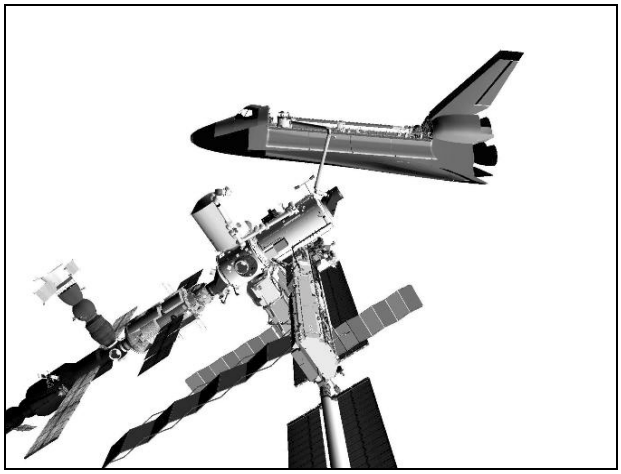

BIRD'S EYE

This Page Intentionally Blank