INSPECTION AND REPAIR REFERENCE DATA

OBSS JOINT ANGLES VS POR COORDINATES ..... FS 8-2
AUTO SEQUENCES ..... FS 8-6
COORDINATE SYSTEM – PL ID 1 ..... FS 8-12
2 ..... FS 8-13
3 ..... FS 8-14
4 ..... FS 8-15
GO/NO-GO CRITERIA ..... FS 8-16
ATTITUDE CONTROL CONSTRAINTS ..... FS 8-17
SRMS EE CAM SURVEYS JOINT ANGLES VS POR COORDINATES ..... FS 8-18
CREW CABIN SURVEY AUTO SEQUENCES ..... FS 8-19
COORDINATE SYSTEM – PL ID 5 ..... FS 8-20
ORM JOINT ANGLES VS POR COORDINATES ..... FS 8-21
AUTO SEQUENCES ..... FS 8-22
COORDINATE SYSTEM – PL ID 4A (UPLINK) ..... FS 8-24
5A (UPLINK) ..... FS 8-25
GO/NO-GO CRITERIA ..... FS 8-26
ATTITUDE CONTROL CONSTRAINTS ..... FS 8-27

OBSS JOINT ANGLES VS POR COORDINATES

OBSS PRE-GRAPPLE

SY	SP	EP	WP	WY	WR
-90.0	+87.6	-129.5	-57.5	0.0	+110.4

X	Y	Z	PITCH	YAW	ROLL	PL ID
-680	+96	-513	270	350	1	0
-680	+94	-495	0	1	340	1
-998	+95	-505	0	1	10	2

OBSS GRAPPLE/BERTH (Expected Values)

SY	SP	EP	WP	WY	WR
-90.0	+76.5	-134.6	-40.9	0.0	+110.0

X	Y	Z	PITCH	YAW	ROLL	PL ID
-680	+106	-454	270	350	1	0
-680	+105	-436	0	0	341	1
-998	+108	-446	0	0	11	2

OBSS HOVER

SY	SP	EP	WP	WY	WR
-90.0	+79.8	-123.1	-55.7	0.0	+110.0

X	Y	Z	PITCH	YAW	ROLL	PL ID
-680	+127	-514	270	350	1	0
-680	+126	-496	0	0	341	1
-998	+129	-507	0	0	11	2
-1271	+127	-511	0	0	11	3

FLAT FIELD START

SY	SP	EP	WP	WY	WR
-89.6	+44.5	-84.6	-45.4	0.0	+109.6

X	Y	Z	PITCH	YAW	ROLL	PL ID
-683	+300	-508	270	336	1	0
-683	+303	-490	0	0	354	1
-1001	+303	-501	0	0	24	2
-1273	+300	-505	0	0	24	3

OBSS SJ PRE-GRAPPLE

SY	SP	EP	WP	WY	WR
-90.0	+87.9	-129.8	-57.0	0.0	+110.0

X	Y	Z	PITCH	YAW	ROLL	PL ID
-680	+96	-513	270	350	1	0
-680	+94	-495	0	0	341	1
-998	+97	-506	0	0	11	2

STBD LDRI ACAS START

SY	SP	EP	WP	WY	WR
-126.0	+38.1	-54.2	-16.7	+25.9	+166.4

X	Y	Z	PITCH	YAW	ROLL	PL ID
-389	+294	-631	242	281	11	0
-385	+310	-625	322	2	49	1
-639	+291	-434	322	2	79	2
-854	+276	-266	322	2	79	3

NOSE CAP LCS ACAS START

SY	SP	EP	WP	WY	WR
-125.3	+127.0	-109.0	+31.6	-31.3	+242.7

X	Y	Z	PITCH	YAW	ROLL	PL ID
-564	-117	-808	138	4	350	0
-551	-123	-819	227	349	326	1
-347	-58	-583	227	349	356	2
-169	-7	-383	227	349	356	3
-191	-13	-400	250	78	158	4

NOSE CAP LCS ACAS PT 53

SY	SP	EP	WP	WY	WR
+102.6	+88.6	-114.7	+37.4	+31.3	+132.9

X	Y	Z	PITCH	YAW	ROLL	PL ID
-579	-454	-478	187	46	281	0
-569	-467	-472	201	317	250	1
-357	-242	-394	201	317	280	2
-174	-53	-322	201	317	280	3
-196	-69	-329	284	7	133	4

NOSE JET CLEAR POSN

SY	SP	EP	WP	WY	WR
+128.8	+30.3	-28.5	-2.0	+35.0	0.0

X	Y	Z	PITCH	YAW	ROLL	PL ID
-303	-547	-434	186	15	140	0
-285	-548	-435	83	39	170	1
-325	-748	-680	83	39	200	2
-355	-916	-892	83	39	200	3
-356	-897	-871	113	313	23	4

PORT LDRI ACAS START

SY	SP	EP	WP	WY	WR
+138.8	+24.6	-61.2	+36.9	-67.4	-74.2

X	Y	Z	PITCH	YAW	ROLL	PL ID
-340	-433	-265	315	63	314	0
-346	-450	-264	2	341	259	1
-643	-336	-272	2	341	289	2
-899	-243	-284	2	341	289	3

OBSS PRE-GRAPPLE AT HANDOFF

SY	SP	EP	WP	WY	WR
+23.5	+63.5	-29.6	-102.9	+11.5	-98.6

X	Y	Z	PITCH	YAW	ROLL	PL ID	
-1015	-362	-688	284	0	270	0	
-1024	-362	-672	314	270	270	1	*
-1014	-44	-680	284	270	270	2	*

*display singularity

OBSS GRAPPLE AT HANDOFF (Expected Values)

SY	SP	EP	WP	WY	WR
+25.8	+66.3	-49.0	-85.9	+10.7	-100.7

X	Y	Z	PITCH	YAW	ROLL	PL ID	
-1031	-362	-618	284	0	270	0	
-1041	-362	-602	314	270	270	1	*
-1031	-44	-610	284	270	270	2	*

*display singularity

OBSS MPLM VIEWING

SY	SP	EP	WP	WY	WR
+35.0	+38.7	-22.8	-0.5	-0.3	-40.0

X	Y	Z	PITCH	YAW	ROLL	PL ID
-1119	-483	-582	5	37	313	0
-1131	-496	-586	62	324	282	1
-1248	-301	-810	62	324	312	2
-1348	-141	-1006	62	324	312	3

OBSS CMG R&R VIEWING

SY	SP	EP	WP	WY	WR
+95.0	+38.7	-22.8	-0.5	-0.3	+22.3

X	Y	Z	PITCH	YAW	ROLL	PL ID
-633	-697	-506	222	84	140	0
-627	-714	-505	91	4	235	1
-627	-726	-823	91	4	265	2
-622	-740	-1095	91	4	265	3

TILE BOARD POSN 1

SY	SP	EP	WP	WY	WR
+56.2	+32.7	-27.3	+104.4	-14.6	-42.7

X	Y	Z	PITCH	YAW	ROLL	PL ID
-951	-543	-536	88	355	239	0
-947	-539	-553	350	302	141	1
-1115	-271	-515	350	302	171	2
-1255	-39	-487	350	302	171	3

TILE BOARD POSN 2

SY	SP	EP	WP	WY	WR
+52.8	+39.8	-41.3	+109.8	-16.3	-46.5

X	Y	Z	PITCH	YAW	ROLL	PL ID
-965	-513	-539	88	355	239	0
-962	-509	-556	350	302	141	1
-1132	-242	-517	350	302	171	2
-1273	-11	-487	350	302	171	3

OBSS JETTISON

SY	SP	EP	WP	WY	WR
-22.5	+38.7	-22.8	-0.5	-0.3	-5.0

X	Y	Z	PITCH	YAW	ROLL	PL ID
-1175	1	-753	23	345	1	0
-1192	1	-760	113	1	345	1
-1059	0	-1049	113	1	15	2

OBSS JETTISON WITH MPM

SY	SP	EP	WP	WY	WR
-29.5	+66.7	-68.5	+26.8	+18.9	-9.9

X	Y	Z	PITCH	YAW	ROLL	PL ID
-1078	0	-754	25	0	1	0
-1094	-5	-761	115	0	330	1
-950	0	-1045	115	0	0	2

OBSS AUTO SEQUENCES

OBSS LDRI RCC SURVEY – STBD (PL ID 3)

Auto Seq ID	Auto posn	X/ SY	Y/ SP	Z/ EP	PITCH/ WP	YAW/ WY	ROLL/ WR	Pause
1	1	-854	+276	-266	322	2	79	**P**
		-126.0	+38.1	-54.2	-16.7	+25.9	+166.4	
1	2	-941	+276	-261	322	2	73	
		-116.2	+49.3	-73.4	-10.6	+12.9	+161.9	
1	3	-1021	+282	-277	322	359	82	
		-107.6	+61.5	-89.7	+2.7	+10.2	+155.2	
1	4	-1228	+486	-281	326	354	69	
		-81.3	+23.0	-39.2	-19.8	-23.5	+135.5	
1	5	-1255	+502	-281	326	352	67	**P**
		-77.8	+22.1	-37.2	-23.0	-28.8	+131.8	
1	6	-1255	+502	-220	346	352	67	
		-87.2	+6.0	-61.2	+14.4	-14.8	+118.2	
1	7	-1358	+477	-220	346	347	16	**P**
		-71.2	+13.6	-64.0	-48.2	-15.1	+81.9	
1	8	-1316	+463	-220	346	347	16	
		-76.3	+18.3	-73.9	-41.6	-15.8	+87.2	
1	9	-1294	+464	-222	346	347	19	
		-79.3	+19.6	-76.6	-36.5	-17.1	+91.1	
1	10	-1061	+218	-201	334	12	22	
		-105.5	+27.8	-69.2	-39.9	-18.0	+147.3	
1	11	-1004	+200	-205	332	20	27	
		-107.1	+10.3	-36.1	-52.7	-13.6	+157.7	
1	12	-930	+220	-225	323	19	54	**P**
		-110.5	+9.7	-18.2	-49.6	+2.6	+167.7	
1	13	-1012	+246	-228	325	14	55	
		-105.0	+27.9	-52.3	-30.2	-1.0	+158.6	
1	14	-1016	+245	-221	309	13	38	
		-89.4	+26.9	-27.7	-64.2	-32.0	+153.2	
1	15	-1252	+472	-233	337	343	30	
		-78.0	+38.5	-88.8	-32.9	-30.3	+94.0	
1	16	-1281	+497	-240	338	341	38	
		-73.3	+36.6	-87.6	-26.6	-33.8	+90.8	
1	17	-1335	+540	-282	336	335	71	**P**
		-60.7	+40.2	-87.7	+3.1	-53.8	+104.2	
1	18	-1279	+527	-325	325	351	93	
		-76.3	+12.9	-16.5	-8.8	-19.0	+142.7	
1	19	-1227	+502	-300	329	344	74	
		-78.9	+45.3	-79.4	+6.0	-31.6	+132.0	
1	20	-1031	+303	-290	321	356	76	
		-104.2	+65.3	-89.6	-3.1	+0.8	+154.3	
1	21	-1002	+276	-288	329	8	85	
		-112.7	+35.4	-62.8	-3.4	+24.1	+153.1	
1	22	-915	+271	-282	311	10	81	**P**
		-106.3	+26.5	-20.3	-40.1	+13.3	+168.8	
1	23	-906	+285	-304	294	359	84	**P**
		-90.9	+52.8	-37.4	-36.5	-5.1	+176.2	
1	24	-733	+285	-299	289	357	84	
		-107.2	+48.7	-27.1	-40.4	+9.6	+186.5	

OBSS LDRI RCC SURVEY – STBD (PL ID 3) (Cont)

Auto Seq ID	Auto posn	X/ SY	Y/ SP	Z/ EP	PITCH/ WP	YAW/ WY	ROLL/ WR	Pause
1	25	-686	+288	-320	276	354	86	
		-96.8	+51.1	-20.0	-45.0	+2.0	+195.7	
1	26	-562	+299	-343	266	350	87	**P**
		-100.7	+54.1	-19.5	-43.9	+8.3	+205.7	
1	27	-563	+286	-369	266	343	86	
		-103.2	+75.8	-45.1	-33.0	+10.3	+204.4	
1	28	-678	+286	-373	270	339	86	
		-89.2	+88.1	-59.3	-27.2	-4.8	+200.0	
1	29	-906	+284	-379	294	332	98	
		-84.2	+112.0	-91.7	-10.8	-9.3	+179.9	
1	30	-963	+284	-381	295	322	87	
		-41.1	+124.3	-105.8	+14.5	-63.6	+205.1	
1	31	-1028	+291	-372	302	322	94	
		-36.1	+125.2	-114.6	+28.0	-65.0	+205.9	
1	32	-1051	+299	-359	302	322	92	**P**
		-32.1	+119.9	-115.1	+41.1	-69.9	+213.7	
1	33	-1047	+290	-358	291	336	83	**P**
		-50.6	+87.2	-69.6	-16.4	-54.4	+181.0	
1	34	-1235	+453	-381	300	316	97	
		-28.1	+62.8	-68.6	+67.0	-64.2	+231.1	
1	35	-1259	+495	-367	308	333	99	
		-54.4	+51.8	-52.6	+11.2	-44.0	+172.4	
1	36	-1280	+499	-373	305	329	97	
		-46.8	+46.5	-41.7	+12.4	-53.3	+181.9	
1	37	-1325	+515	-370	311	334	101	**P**
		-52.2	+36.7	-31.6	+5.6	-45.4	+170.0	
1	38	-1347	+480	-395	314	332	103	**P**
		-47.5	+48.4	-48.5	+15.7	-50.5	+172.2	
1	39	-1303	+474	-393	312	336	98	
		-54.4	+47.5	-42.6	+0.7	-45.1	+165.0	
1	40	-1282	+467	-390	312	337	94	
		-56.7	+50.7	-46.9	-2.9	-45.3	+161.5	
1	41	-1270	+448	-392	311	336	99	
		-55.5	+57.9	-56.3	+4.8	-42.7	+166.4	
1	42	-1077	+264	-408	305	335	94	
		-62.0	+106.0	-88.2	-13.3	-38.6	+170.2	
1	43	-1029	+272	-400	298	347	76	
		-73.5	+70.1	-41.0	-46.1	-34.3	+166.2	
1	44	-1002	+285	-385	305	355	72	
		-89.5	+57.1	-35.0	-48.2	-17.9	+163.0	
1	45	-970	+290	-365	316	4	65	
		-103.8	+30.9	-13.3	-56.7	-3.7	+161.1	
1	46	-875	+288	-365	322	1	69	**P**
		-120.8	+32.5	-23.7	-45.8	+12.8	+164.7	

OBSS LCS RCC SURVEY – NOSE CAP (PL ID 2)

Auto Seq ID	Auto posn	X/ SY	Y/ SP	Z/ EP	PITCH/ WP	YAW/ WY	ROLL/ WR	Pause
2	47	-347	-58	-583	227	349	356	**P**
		-125.3	+127.0	-109.0	+31.6	-31.3	+242.7	
2	48	-343	+88	-544	221	14	21	
		-100.6	+79.2	-100.2	+57.9	-34.5	+276.4	
2	49	-384	+198	-466	205	31	51	**P**
		-91.1	+34.6	-76.0	+52.8	-37.9	+287.2	
2	50	-379	+219	-431	206	33	71	
		-92.8	+29.6	-68.9	+25.1	-34.6	+272.2	
2	51	-406	+224	-349	203	37	114	**P**
		-92.2	+18.1	-59.1	-16.8	-19.2	+253.6	
2	52	-410	+221	-333	203	38	114	**P**
		-92.0	+15.9	-58.9	-15.4	-20.0	+252.8	
3	53	-357	-242	-394	201	317	280	**P**
		+102.6	+88.6	-114.7	+37.4	+31.3	+132.9	
3	54	-321	-263	-372	212	307	271	
		+114.7	+73.8	-87.6	+2.6	+19.2	+149.0	
3	55	-282	-269	-319	229	291	259	**P**
		+125.8	+33.8	-28.0	-46.5	+1.0	+159.2	
3	56	-243	-261	-339	224	290	280	
		+127.3	+32.2	-28.4	-27.3	+19.2	+153.6	
3	57	-219	-246	-371	219	288	302	**P**
		+128.8	+30.3	-28.5	-2.0	+35.0	+140.2	

OBSS LDRI RCC SURVEY – PORT (PL ID 3)

Auto Seq ID	Auto posn	X/ SY	Y/ SP	Z/ EP	PITCH/ WP	YAW/ WY	ROLL/ WR	Pause
4	58	-899	-243	-284	2	341	289	**P**
		+138.8	+24.6	-61.2	+36.9	-67.4	-74.2	
4	59	-958	-253	-278	2	341	293	
		+132.6	+32.0	-75.1	+35.2	-60.7	-81.4	
4	60	-1023	-277	-267	0	353	308	
		+137.2	+46.0	-105.8	+30.5	-49.2	-95.4	
4	61	-1057	-310	-267	0	356	307	
		+132.8	+48.4	-112.0	+39.0	-43.5	-88.9	
4	62	-1186	-442	-272	0	359	309	
		+104.6	+53.8	-108.0	+34.1	-14.5	-75.6	
4	63	-1265	-509	-274	0	350	309	
		+90.5	+36.5	-61.6	+5.1	-8.3	-76.5	
4	64	-1324	-523	-274	0	348	315	**P**
		+83.6	+27.0	-40.2	-12.7	-2.7	-75.7	
4	65	-1345	-496	-232	345	352	262	**P**
		+77.7	+52.1	-81.0	+53.7	+1.4	-89.2	
4	66	-1268	-456	-230	345	352	262	
		+88.0	+59.4	-96.4	+62.1	-7.9	-84.8	
4	67	-1175	-357	-219	345	345	262	
		+101.6	+58.8	-101.1	+67.7	-27.1	-78.2	
4	68	-1134	-315	-218	345	345	262	
		+109.9	+60.7	-108.7	+75.7	-34.5	-73.9	

OBSS LDRI RCC SURVEY – PORT (PL ID 3) (Cont)

Auto Seq ID	Auto posn	X/ SY	Y/ SP	Z/ EP	PITCH/ WP	YAW/ WY	ROLL/ WR	Pause
4	69	-1097	-277	-214	345	345	262	
		+118.3	+60.1	-113.1	+83.9	-41.8	-68.6	
4	70	-1061	-238	-210	345	345	262	
		+127.4	+57.8	-115.3	+93.5	-49.4	-61.5	
4	71	-998	-216	-214	345	345	259	
		+138.2	+51.6	-106.7	+105.8	-56.4	-45.3	
4	72	-972	-211	-216	345	345	259	
		+141.7	+49.1	-101.8	+107.8	-58.5	-40.2	
4	73	-935	-206	-219	345	345	259	
		+145.8	+44.9	-93.5	+109.7	-60.7	-33.2	
4	74	-906	-204	-220	345	345	259	**P**
		+148.4	+40.9	-85.9	+110.2	-61.9	-28.4	
4	75	-898	-214	-230	347	348	259	**P**
		+151.6	+37.4	-83.2	+112.5	-60.5	-24.5	
4	76	-979	-231	-226	347	348	259	
		+142.8	+47.3	-102.3	+109.1	-56.1	-39.1	
4	77	-1034	-262	-231	347	348	259	
		+133.0	+54.0	-109.7	+100.1	-49.7	-51.4	
4	78	-1110	-338	-234	347	348	259	
		+115.4	+57.6	-106.2	+82.6	-35.9	-66.5	
4	79	-1183	-406	-238	353	356	254	
		+105.4	+47.4	-108.3	+97.8	-18.3	-66.4	
4	80	-1244	-467	-242	354	356	254	
		+94.2	+43.7	-95.2	+86.8	-8.9	-72.3	
4	81	-1312	-504	-245	359	0	254	
		+83.9	+33.3	-88.5	+90.8	+4.7	-74.5	
4	82	-1343	-511	-246	359	0	254	**P**
		+79.6	+32.4	-85.3	+88.9	+8.1	-77.0	
4	83	-1323	-537	-315	346	348	282	**P**
		+80.9	+49.1	-50.2	+5.9	+0.6	-87.1	
4	84	-1244	-513	-305	353	357	287	
		+93.4	+63.0	-95.3	+34.6	-4.2	-77.4	
4	85	-1176	-450	-298	352	2	290	
		+107.4	+76.4	-122.8	+46.3	-12.9	-76.9	
4	86	-1106	-380	-295	352	4	291	
		+129.7	+77.1	-134.2	+56.0	-33.1	-76.8	
4	87	-1023	-300	-288	354	357	289	
		+143.2	+59.7	-116.9	+57.7	-54.0	-76.3	
4	88	-989	-275	-294	350	350	282	
		+141.9	+62.4	-105.9	+54.8	-59.0	-73.1	
4	89	-965	-263	-294	350	350	282	
		+145.7	+59.5	-102.4	+55.6	-62.7	-71.4	
4	90	-933	-253	-289	358	347	283	
		+143.2	+37.8	-83.6	+59.1	-64.9	-64.1	
4	91	-887	-248	-287	4	341	282	**P**
		+138.7	+16.1	-50.9	+54.8	-67.1	-54.1	
4	92	-887	-285	-287	4	341	282	
		+135.8	+11.3	-38.1	+44.8	-64.3	-56.4	
4	93	-897	-285	-331	2	336	302	**P**
		+131.8	+25.2	-40.2	-13.0	-60.8	-101.1	

OBSS LDRI RCC SURVEY – PORT (PL ID 3) (Cont)

Auto Seq ID	Auto posn	X/ SY	Y/ SP	Z/ EP	PITCH/ WP	YAW/ WY	ROLL/ WR	Pause
4	94	-910	-285	-330	2	340	302	
		+134.6	+32.1	-56.2	-2.8	-60.3	-98.7	
4	95	-926	-285	-325	1	340	298	
		+133.5	+35.2	-62.3	+8.1	-60.4	-92.4	
4	96	-950	-287	-335	359	340	292	
		+132.0	+42.7	-71.3	+20.8	-59.9	-84.2	
4	97	-978	-289	-352	357	345	287	
		+135.7	+55.0	-89.7	+37.0	-59.1	-75.7	
4	98	-1020	-286	-332	350	350	297	
		+138.4	+76.6	-109.9	+18.9	-51.8	-94.3	
4	99	-1074	-329	-341	342	1	292	
		+144.5	+110.9	-131.3	+18.5	-47.0	-87.9	
4	100	-1148	-401	-346	340	357	289	
		+111.3	+106.5	-115.8	+9.9	-17.6	-89.7	
4	101	-1229	-475	-357	333	359	289	
		+82.7	+103.5	-95.1	-6.4	+14.9	-96.3	
4	102	-1280	-503	-363	327	1	285	
		+63.2	+97.6	-79.2	-9.6	+35.4	-106.0	
4	103	-1328	-517	-364	327	1	285	**P**
		+55.8	+89.2	-69.8	-9.5	+42.7	-107.5	
4	104	-1338	-476	-389	345	357	254	**P**
		+74.7	+86.1	-101.8	+49.9	+5.8	-92.3	
4	105	-1283	-453	-391	343	350	243	
		+85.0	+78.6	-87.6	+51.5	-12.6	-84.7	
4	106	-1166	-340	-392	343	350	243	
		+110.2	+97.3	-115.5	+67.9	-30.3	-65.2	
4	107	-1113	-285	-388	342	337	239	
		+109.8	+80.0	-93.2	+69.6	-41.1	-56.1	
4	108	-1071	-284	-378	352	332	270	
		+112.1	+61.9	-80.6	+39.3	-48.8	-70.4	
4	109	-1050	-279	-387	357	332	272	
		+114.9	+55.2	-78.4	+45.7	-51.5	-63.9	
4	110	-985	-279	-386	1	331	281	**P**
		+120.7	+42.9	-62.9	+32.8	-58.9	-67.5	

OBSS LDRI RCC SURVEY – NOSE CAP (PL ID 3)

Auto Seq ID	Auto posn	X/ SY	Y/ SP	Z/ EP	PITCH/ WP	YAW/ WY	ROLL/ WR	Pause
7	119	-195	+107	-338	248	320	331	**P**
		+173.4	+95.8	-78.6	-7.7	-13.2	+175.8	
7	120	-195	+103	-351	241	320	329	
		+169.8	+107.2	-91.5	-1.0	-9.4	+173.4	
7	121	-185	+88	-386	215	320	315	**P**
		+133.6	+136.6	-130.1	+23.7	+16.5	+146.5	
7	122	-176	+77	-422	188	299	289	
		+120.6	+74.0	-105.5	+56.3	+34.0	+117.8	
7	123	-174	+61	-437	158	293	260	
		+125.8	+39.7	-71.8	+53.0	+33.8	+108.2	
7	124	-157	+50	-383	139	292	240	**P**
		+125.5	+9.1	-35.6	+44.8	+37.7	+103.1	

OBSS LDRI RCC SURVEY – NOSE CAP (PL ID 3) (Cont)

Auto Seq ID	Auto posn	X/ SY	Y/ SP	Z/ EP	PITCH/ WP	YAW/ WY	ROLL/ WR	Pause
7	125	-171	+27	-411	141	298	261	
		+120.6	+13.4	-50.7	+77.9	+31.2	+87.1	
7	126	-171	-19	-417	144	314	269	**P**
		+110.6	+12.9	-73.4	+102.2	+21.9	+81.1	
7	127	-164	-16	-395	147	318	263	
		+107.6	+12.8	-82.5	+102.2	+24.2	+84.9	
7	128	-135	+4	-337	169	306	250	
		+112.9	+41.4	-89.5	+48.4	+31.3	+119.3	
7	129	-159	+37	-300	233	297	309	
		+134.3	+57.1	-60.5	+0.5	+22.7	+150.9	
7	130	-184	+68	-273	184	282	237	**P**
		+128.5	+19.2	-32.2	-20.5	+22.6	+147.4	
7	131	-209	+31	-231	238	298	266	**P**
		+133.9	+57.2	-61.3	-32.3	-11.2	+157.4	
7	132	-207	+18	-230	230	289	249	**P**
		+130.0	+25.0	-56.4	+56.4	-8.9	+156.5	
7	133	-206	-20	-231	235	302	258	
		+129.9	+57.7	-55.9	-38.6	-14.5	+157.6	
7	134	-216	-59	-248	251	321	272	
		+150.5	+73.4	-49.7	-47.4	-43.6	+163.8	
7	135	-191	-58	-267	234	322	268	
		+138.2	+97.2	-85.8	-26.2	-27.4	+159.0	
7	136	-168	-13	-270	214	303	256	**P**
		+122.6	+66.1	-78.5	-13.9	+3.9	+151.1	
7	137	-161	-40	-287	231	317	283	
		+135.4	+90.3	-83.6	-13.4	-8.7	+159.2	
7	138	-166	-60	-348	189	326	271	
		+89.3	+89.9	-134.7	+59.6	+34.4	+119.9	
7	139	-179	-69	-380	188	333	285	**P**
		+73.9	+97.8	-146.0	+86.9	+41.2	+99.9	
7	140	-179	-70	-381	185	316	280	**P**
		+96.4	+71.7	-109.3	+63.5	+38.5	+111.1	
7	141	-178	-80	-345	204	319	278	
		+101.9	+94.9	-109.1	+22.1	+28.8	+137.0	
7	142	-182	-84	-305	221	320	274	**P**
		+118.3	+98.2	-94.2	-9.3	+3.9	+154.1	

OBSS COORDINATE SYSTEM – PL ID 1

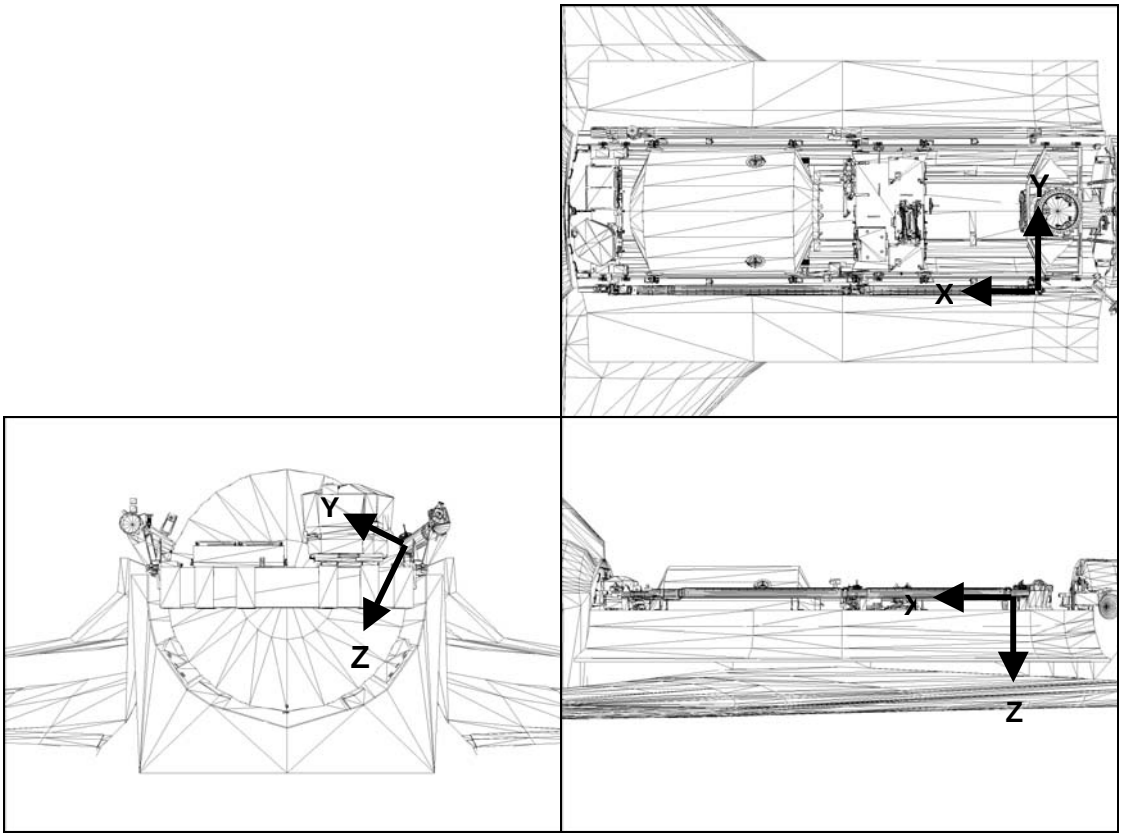

POR: POR at OBSS fwd striker bar

PURPOSE: OBSS unberth/berth

RATES:	COARSE	VERN
TRANS LIM ft/sec	0.20	0.10
ROT LIM deg/sec	0.88	0.08

OBSS COORDINATE SYSTEM – PL ID 2

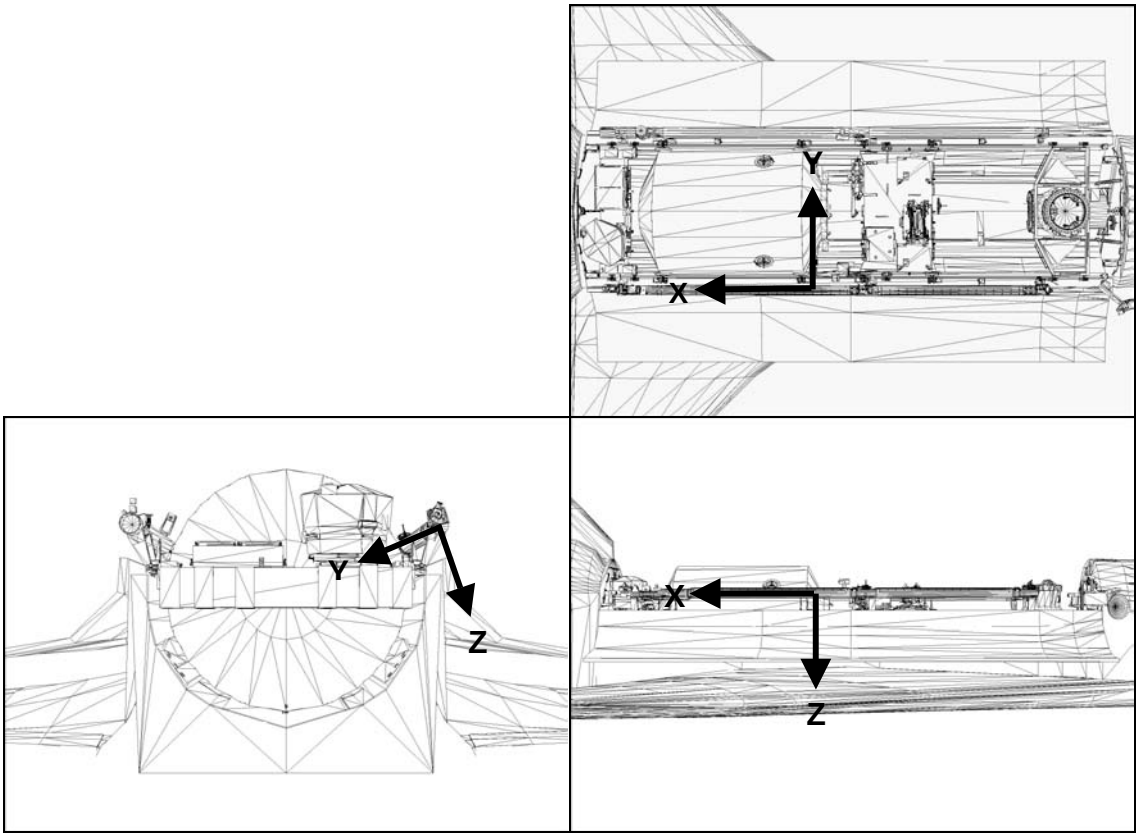

POR: POR at OBSS center of mass

PURPOSE: Large, non-survey boom maneuvers

RATES:	COARSE	VERN
TRANS LIM ft/sec	0.70	0.23
ROT LIM deg/sec	2.64	0.88

OBSS COORDINATE SYSTEM – PL ID 3

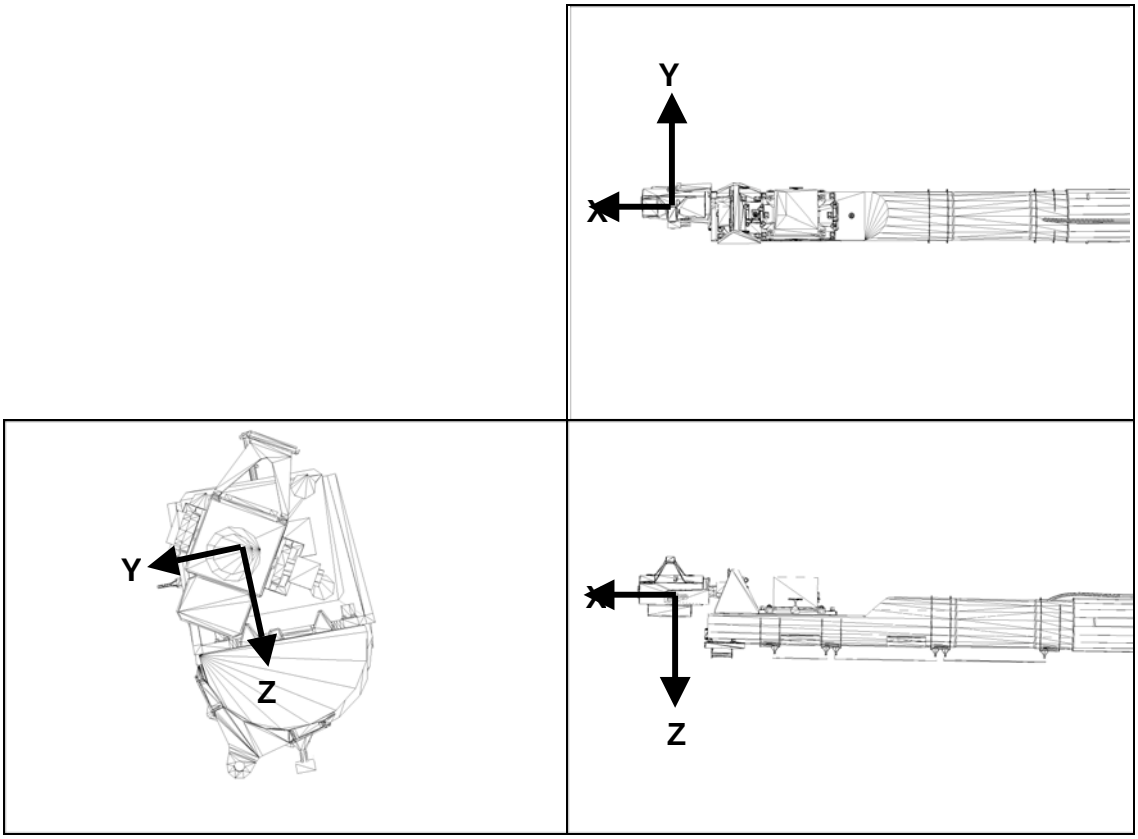

POR: POR at OBSS ITVC/LDRI PTU Pivot

PURPOSE: OBSS Surveys using LDRI

RATES:	COARSE	VERN
TRANS LIM ft/sec	0.23	0.05
ROT LIM deg/sec	2.64	0.88

OBSS COORDINATE SYSTEM – PL ID 4

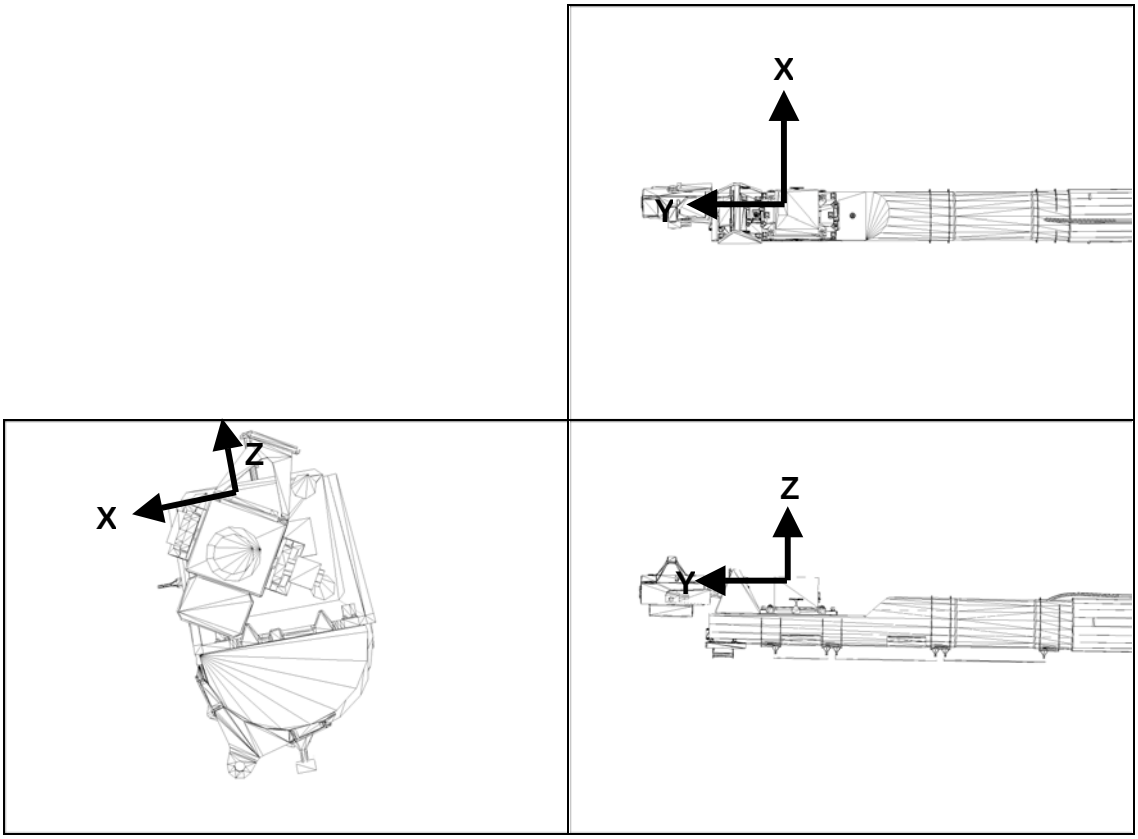

POR:	POR at LCS Eyepoint	
PURPOSE:	OBSS Surveys using LCS	
RATES:	COARSE	VERN
TRANS LIM ft/sec	0.15	0.05
ROT LIM deg/sec	2.64	0.88

OBSS GO/NO-GO CRITERIA

	CONTINUE OPERATIONS IF:					
	DAMAGE DETECT GRAPPLE UNBERTH	DAMAGE DETECT SURVEY	FOCUSED INSP/REPAIR GRAPPLE/HAND OFF (HIGH PRIORITY)	CONTINUE FOCUSED INSP/REPAIR (HIGH PRIORITY)	ENTRY	FLT RULE REF
A. STBD MPM STOW MOTORS (2)	2↓ [1]	2↓ [1]	2↓ [1]	2↓ [1]		{LF1_A12-11}
B. STBD MPM (3) STOWED INDICATIONS (6)					[2]	{LF1_A12-11}
C. STBD MPM (3) DEP INDICATIONS (6)	FORWARD 1↓	FORWARD 1↓	FORWARD 1↓	FORWARD 1↓		{LF1_A12-11}
D. STBD MRL LAT CAP (3)	1↓ [6]	3↓ [7]	3↓ [7]	3↓ [7]	0↓ [6]	{LF1_A12-12}
E. STBD JETTISON (2)	1↓ [10]	1↓ [10]	1↓	1↓		{LF1_A12-31}
F. PORT MPM STOW MOTORS (2)	2↓ [1]	2↓ [1]	2↓ [1]	2↓ [1]		{A12-72}
G. PORT MPM (4) DEP INDICATIONS (8)	SHOULDER 1↓	SHOULDER 1↓	SHOULDER 1↓	SHOULDER 1↓		{A12-72}
H. PORT MRL LAT CAP (3)	[8]	[8]	[9]	[9]		{A12-73}
I. PORT JETTISON (2)	1↓ [10]	1↓ [10]	1↓	1↓		{A12-181}
J. AUTO MODE (1)			1↓	1↓		{LF1_A12-22}
K. MANUAL AUG MODE (1)			2↓ [3]	3↓ [3]		{A12-111}
L. DIRECT MODE (1) M. SINGLE MODE (1)	1↓	1↓				{A12-111}
N. BACKUP MODE (1)	0↓	0↓	0↓			{A12-111}
O. BRAKES (6)	0↓	0↓	0↓	0↓		{A12-115}
P. AUTO BRAKES (1)	0↓ [4]	0↓ [4]	0↓ [4]	0↓ [4]		{A12-116}
Q. CAPTURE & RIGIDIZE (2)	1↓		1↓			{A12-161}
R. DERIGIDIZE (2)	1↓	1↓	2↓	2↓		{A12-161}
S. RELEASE (2)	1↓ [1]	1↓ [1]	3↓ [1]	3↓ [1]		{A12-161}
T. BACKUP RELEASE (1)	0↓ [1]	0↓ [1]				{A12-161}
U. SRMS THERMAL	REQUIRED	REQUIRED	REQUIRED	REQUIRED		{A12-3}
V. SENSOR THERMAL	REQUIRED	REQUIRED	REQUIRED [5]	REQUIRED [5]		{LF1_A12-2}

NOTES:

[1] EVA CAPABILITY EXISTS FOR THE FOLLOWING CONTINGENCIES:

– MPM DEPLOY/STOW
– SRMS STRAPDOWN
– OBSS BERTHING
– GRAPPLE FIXTURE (GF) RELEASE

[2] ONE AT THE FORWARD AND ONE AT EITHER THE MID OR AFT PEDESTAL IS REQUIRED

[3] ONE OF MANUAL, SINGLE, DIRECT, OR BACKUP REQUIRED FOR POSITIONING FOR DAMAGE ASSESSMENT/REPAIR AND JETTISON

[4] COMPUTER-SUPPORTED MODES UNAVAILABLE WITH LOSS OF AUTOBRAKES, BUT OPERATIONS IN DIRECT AND BACKUP CAN CONTINUE WITH THE LOSS OF AUTOBRAKES

[5] SENSOR THERMAL NOT REQUIRED FOR REPAIR OR HANDOFF FOR SSRMS CLEARANCES

[6] THREE MRLs LATCHED REQUIRED FOR ENTRY. TWO MRLs LATCHED REQUIRED FOR DOCK/UNDOCK (ONE OF WHICH MUST BE THE FWD MRL) OR OBSS LEFT ON SRMS DURING DOCK/UNDOCK. GO WITH CONFIRMED CAPABILITY TO DOCK AND UNDOCK WITH THE OBSS ON THE SRMS

[7] WITH THREE MRL'S FAILED, BOOM JETTISON OR CONTINGENCY STOW ON ISS WILL BE REQUIRED

[8] CONTINUE OPERATIONS IF ONE FAILURE WILL NOT RESULT IN THE INABILITY TO LATCH AT LEAST TWO MRLs

[9] CONTINUE OPERATIONS EVEN IF ONE FAILURE WILL RESULT IN THE INABILITY TO LATCH AT LEAST TWO MRLs (ASSUMES CURRENTLY HAVE TWO-LATCH CAPABILITY). EVA CAPABILITY REQUIRED

[10] SYSTEM REDUNDANCY OR JETTISON REDUNDANCY IFM REQUIRED

OBSS ATTITUDE CONTROL CONSTRAINTS

OBSS CONFIG [2] \ ATTITUDE CONTROL & OPS [1][3][4]		STS ATTITUDE CONTROL		ISS ATTITUDE CONTROL [6] [9] [11]			OPERATIONS				
		VRCS	PRCS	CMG - TA [5]		THRUSTERS ONLY	CREW EXERCISE (ISOLATED OR UN-ISOLATED) [13]	EVA OPS [14]	REBOOST (STS, SM, PROG) [7] [11]	UNDOCK-ING (STS/ RS) [8]	DOCK-ING (STS/ RS) [8]
				MOM MGMT OR ATT HOLD	DESAT REQUEST						
OBSS SRMS OPS	OBSS AT HANDOFF POSITION	A12	B12, LO Z	OK	ENA	OK	OK	OK	OK	TBD	TBD
	OBSS MNVR TO MPLM VIEWING POSITION	A12	B12, LO Z	OK	ENA	NOT OK	OK	OK	NOT OK	NOT OK	NOT OK
	OBSS AT MPLM VIEWING POSITION	A12	B12, LO Z	OK	ENA	OK	OK	OK	OK	TBD	TBD
	OBSS MNVR TO CMG R&R VIEWING POSITION	A12	B12, LO Z	OK	ENA	NOT OK	OK	OK	NOT OK	NOT OK	NOT OK
	OBSS AT CMG R&R VIEWING POSITION	A12	B12, LO Z	OK	ENA	OK	OK	OK	OK	TBD	TBD
	MANEUVER TO OBSS DOCKED SURVEY POSITIONS (WITHOUT EVA CREWMEMBER)	A12	B12, LO Z	OK	ENA	NOT OK	OK	OK	NOT OK		
	IN DOCKED SURVEY POSITIONS (WITHOUT EVA CREWMEMBER)	A12	B12, LO Z	OK	ENA	OK	OK	OK	OK		
	MANEUVER TO OBSS DOCKED SURVEY POSITIONS (W/ EVA CREWMEMBER)										
	IN DOCKED SURVEY POSITIONS (W/ EVA CREWMEMBER)										
	OBSS MNVR TO HANDOFF POSITION	A12	B12, LO Z	OK	ENA	NOT OK	OK	OK	NOT OK	NOT OK	NOT OK
AFTER OBSS LATCHING		A12	B12, LO Z	OK	ENA	OK	OK	OK	OK	OK	OK

NOTES:

[1] KEY: ☐ – ACS OR OPS ALLOWED. ■ – ACS OR OPS NOT ALLOWED ▨ – NOT ANALYZED

[2] SSRMS/OBSS POSITIONS DEFINED IN REF DATA

[3] REFERENCE CSA-SS-MOA-LF1-003, CSA-SS-MOA-LF1-004 REV C, CSA-SS-MOA-LF1-006 REV B, MOA.79103 REV A

[4] CONSTRAINTS APPLY TO BOTH BRAKES ON AND POSITION HOLD UNLESS OTHERWISE NOTED

[5] SINGLE PULSE MODE FOR CMG-TA

[6] REFERENCE RULE {B12-105}, SSRMS ATTITUDE CONTROL CONSTRAINTS FOR ISS [HC] [RC], FOR USE OF AUTOMATIC ATTITUDE CONTROL IN UNPLANNED CONTINGENCY

[7] SHUTTLE REBOOST (CONFIG 1-4), SM AND PROGRESS REBOOST

[8] DOCKING AND UNDOCKING VEHICLES INCLUDE ORBITER, SOYUZ, AND PROGRESS

[9] CONSTRAINTS APPLY TO ISS ATTITUDE HOLD AND MANEUVERS

[10] 5 FT OF CLEARANCE REQUIRED FOR ALT

[11] SSRMS CONSTRAINTS APPLY TO MATED AS WELL AS STAGE OPERATIONS

[12] THESE OPERATIONS ARE PERMITTED IF THE OBSS IS IN BRAKES ON AT THE UHF CLEAR OR AFT POSITIONS

[13] IF THERE IS AN EVA WHILE THE ORBITER IS CONTROLLING ATTITUDE WITH PRCS JETS, ONLY TVIS EXERCISE IS ALLOWED DURING THE EVA

[14] MAXIMUM EVA LOADS ARE NOT PERMITTED DURING ORBITER PRCS MANEUVER OF THE ISS OR DURING PRCS TWO OR THREE-JET ATTITUDE HOLD. MAXIMUM EVA LOADS INCLUDE APFR INGRESS, VIGOROUS APFR MOTIONS, AND CREW KICK-OFFS

SRMS EE CAM SURVEYS JOINT ANGLES VS POR COORDINATES

WSB VENT SURVEY

SY	SP	EP	WP	WY	WR
-22.6	+28.8	-29.8	-33.7	+33.2	+12.5

X	Y	Z	PITCH	YAW	ROLL	PLID
-1203	+39	-582	328	4	357	0

STBD CREW CABIN SURVEY

SY	SP	EP	WP	WY	WR
-134.9	+17.2	-57.5	-112.6	-59.5	+228.2

X	Y	Z	PITCH	YAW	ROLL	PLID
-351	+180	-411	241	53	123	0
-351	+180	-411	241	53	123	5

PORT CREW CABIN SURVEY

SY	SP	EP	WP	WY	WR
+65.9	+53.3	-94.3	-99.6	-36.5	+216.5

X	Y	Z	PITCH	YAW	ROLL	PLID
-840	-364	-333	324	291	323	0
-840	-364	-333	324	291	323	5

SRMS EE CAM CREW CABIN SURVEY AUTO SEQUENCES

Stbd Crew Cabin Survey (PL ID 5)

Auto Seq ID	Auto posn	X/ SY	Y/ SP	Z/ EP	PITCH/ WP	YAW/ WY	ROLL/ WR	Pause
5	111	-351	+180	-411	241	53	123	**P**
		-134.9	+17.2	-57.5	-112.6	-59.5	+228.2	
5	112	-484	+230	-465	255	48	103	**P**
		-116.2	+28.3	-69.7	-112.7	-33.9	+212.2	
5	113	-351	+180	-411	241	53	123	**P**
		-134.9	+17.2	-57.5	-112.6	-59.5	+228.2	
5	114	-548	+266	-478	270	38	45	**P**
		-107.7	+28.3	-66.4	-108.1	-14.9	+164.2	

Port Crew Cabin Survey (PL ID 5)

6	115	-840	-364	-333	324	291	323	**P**
		+65.9	+53.3	-94.3	-99.6	-36.5	+216.5	
6	116	-523	-296	-354	298	285	302	
		+122.3	+61.7	-109.1	-97.6	+20.3	+186.2	
6	117	-298	-252	-375	241	283	237	**P**
		+151.1	+40.8	-70.8	-91.9	+53.1	+146.4	
6	118	-518	-252	-385	300	281	271	**P**
		+129.1	+70.1	-118.9	-97.9	+28.4	+150.5	

SRMS EE CAM CREW CABIN SURVEY COORDINATE SYSTEM – PL ID 5

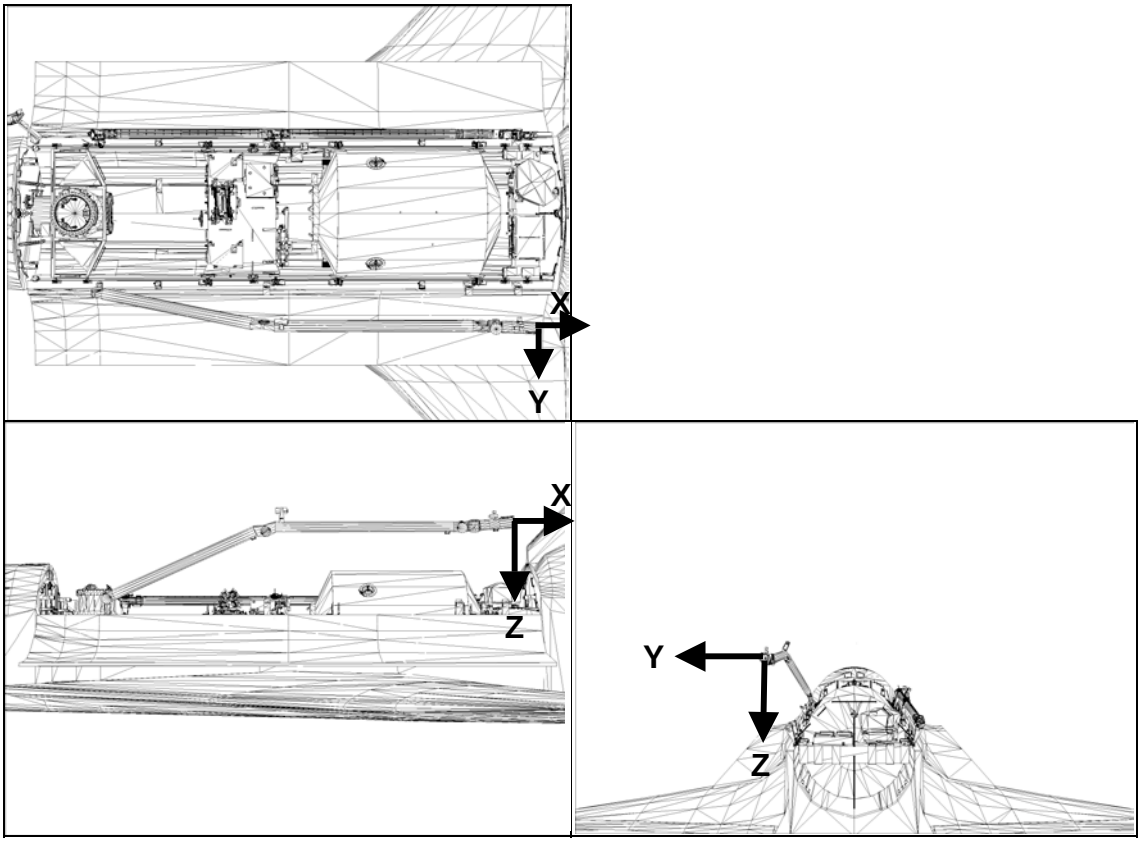

POR:	POR at center of EE	
PURPOSE:	Crew Cabin Surveys using SRMS EE Camera	
RATES:	COARSE	VERN
TRANS LIM ft/sec	0.61	0.33
ROT LIM deg/sec	2.64	0.88

ORM JOINT ANGLES VS POR COORDINATES

PMA2 PRE-GRAPPLE POSN

SY	SP	EP	WP	WY	WR
-33.9	+131.6	-141.8	-114.0	-41.0	-4.1

X	Y	Z	PITCH	YAW	ROLL	PL ID
-724	-71	-562	214	330	291	0
-692	-30	-504	0	0	0	4A
-724	-71	-562	214	330	291	5A

PMA2 GRAPPLED POSN (Expected Values)

SY	SP	EP	WP	WY	WR
-61.2	+138.2	-151.3	-84.0	-51.1	+32.9

X	Y	Z	PITCH	YAW	ROLL	PL ID
-681	-41	-533	214	330	290	0
-649	0	-475	0	0	0	4A
-681	-41	-533	214	330	290	5A

SEPARATION POSN

SY	SP	EP	WP	WY	WR
-70.1	+129.5	-124.7	-90.7	-51.3	+47.2

X	Y	Z	PITCH	YAW	ROLL	PL ID
-681	-41	-652	214	330	290	0
-649	0	-595	0	0	0	4A
-681	-41	-652	214	330	290	5A

UNDOCKED POSN

SY	SP	EP	WP	WY	WR
-74.3	+120.9	-105.2	-96.4	-50.0	+53.3

X	Y	Z	PITCH	YAW	ROLL	PL ID
-679	-42	-729	215	330	290	0
-648	-1	-671	1	0	0	4A
-679	-42	-729	215	330	290	5A

REPAIR POSN

SY	SP	EP	WP	WY	WR
+53.4	+16.4	-115.3	+32.1	-61.9	+237.3

X	Y	Z	PITCH	YAW	ROLL	PL ID
-852	-165	-158	341	330	290	0
-917	-124	-167	127	0	0	4A
-852	-165	-158	341	330	290	5A

CAPTURE POSN

SY	SP	EP	WP	WY	WR
-60.6	+138.3	-152.4	-83.7	-51.0	+32.0

X	Y	Z	PITCH	YAW	ROLL	PL ID
-681	-41	-529	214	330	290	0
-649	0	-471	0	0	0	4A
-681	-41	-529	214	330	290	5A

ORM AUTO SEQUENCES

Maneuver to Repair posn (PL ID 5A)

Auto Seq ID	Auto posn	X/ SY	Y/ SP	Z/ EP	PITCH/ WP	YAW/ WY	ROLL/ WR	Pause
1	1	-679	-42	-729	215	330	290	**P**
		-74.3	+120.9	-105.2	-96.4	-50.0	+53.3	
1	2	-783	+15	-732	236	291	327	
		-55.7	+110.9	-103.9	-55.0	-37.3	+83.9	
1	3	-1082	-104	-722	324	293	66	
		-7.7	+65.4	-50.4	-66.3	-47.9	+69.7	
1	4	-1017	-394	-694	354	331	107	
		+36.1	+70.4	-46.4	-52.7	-59.0	+87.2	
1	5	-1003	-394	-637	347	356	124	
		+37.3	+80.4	-71.8	-25.5	-35.6	+115.0	
1	6	-605	-340	-548	318	23	193	
		+126.6	+112.5	-116.9	-78.9	-63.0	+92.2	
1	7	-364	-340	-489	280	10	257	
		+151.5	+69.3	-80.4	-73.4	-30.6	+126.2	
1	8	-375	-194	-589	215	338	284	**P**
		+170.7	+96.7	-105.9	-31.8	+17.2	+146.3	
1	9	-158	-151	-381	206	345	273	
		+171.9	+31.0	-61.0	+0.1	+13.0	+134.6	
1	10	-158	-151	-248	248	345	273	
		+168.4	+3.7	-28.8	-43.5	+1.1	+131.0	
1	11	-340	-151	-109	279	345	273	
		+156.9	+5.2	-68.6	-32.9	-7.3	+133.0	
1	12	-498	-120	-97	315	315	287	
		+143.5	+2.7	-89.3	-48.1	+6.0	+140.5	
1	13	-852	-165	-158	341	330	290	**P**
		+53.4	+16.4	-115.3	+32.1	-61.9	+237.3	

Maneuver to Undock posn (PL ID 5A)

Auto Seq ID	Auto posn	X/ SY	Y/ SP	Z/ EP	PITCH/ WP	YAW/ WY	ROLL/ WR	Pause
2	14	-852	-165	-158	341	330	290	**P**
		+53.4	+16.4	-115.3	+32.1	-61.9	+237.3	
2	15	-498	-120	-97	315	315	287	
		+143.5	+2.7	-89.3	-48.1	+6.0	+140.5	
2	16	-340	-151	-109	279	345	273	
		+156.9	+5.2	-68.6	-32.9	-7.3	+133.0	
2	17	-158	-151	-248	248	345	273	
		+168.4	+3.7	-28.8	-43.5	+1.1	+131.0	
2	18	-158	-151	-381	206	345	273	
		+171.9	+31.0	-61.0	+0.1	+13.0	+134.6	
2	19	-375	-194	-589	215	338	284	**P**
		+170.7	+96.7	-105.9	-31.8	+17.2	+146.3	
2	20	-364	-340	-489	280	10	257	
		+151.5	+69.3	-80.4	-73.4	-30.6	+126.2	
2	21	-605	-340	-548	318	23	193	
		+126.6	+112.5	-116.9	-78.9	-63.0	+92.2	
2	22	-1003	-394	-637	347	356	124	
		+37.3	+80.4	-71.8	-25.5	-35.6	+115.0	
2	23	-1017	-394	-694	354	331	107	
		+36.1	+70.4	-46.4	-52.7	-59.0	+87.2	
2	24	-1082	-104	-722	325	293	66	
		-7.7	+65.5	-50.7	-65.6	-48.0	+69.1	
2	25	-783	+15	-732	236	291	327	
		-55.7	+110.9	-103.9	-55.0	-37.3	+83.9	
2	26	-679	-42	-729	215	330	290	**P**
		-74.3	+120.9	-105.2	-96.4	-50.0	+53.3	

ORM COORDINATE SYSTEM – PL ID 4A (UPLINK)

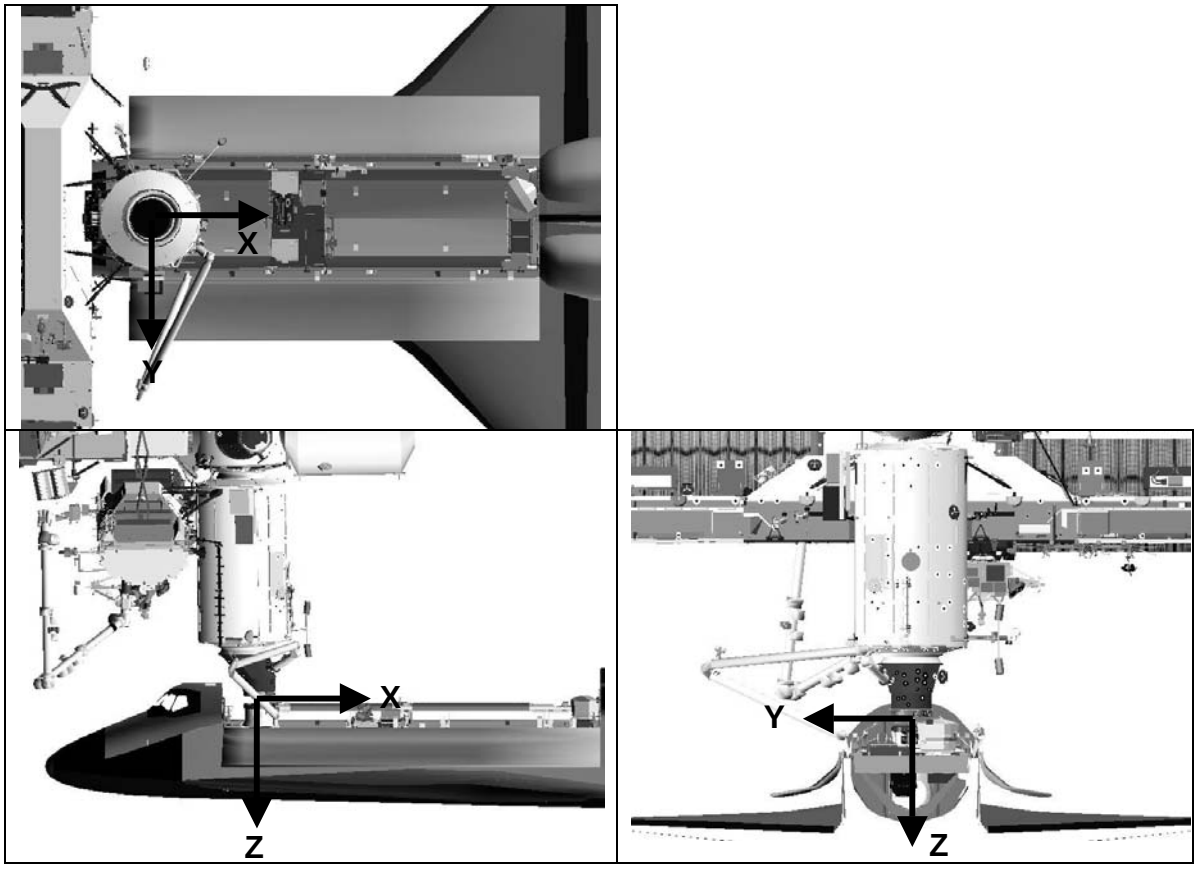

POR:	POR at center of mating interface	
PURPOSE:	Undock/Dock of Orbiter/ISS	
RATES:	COARSE	VERN
TRANS LIM ft/sec	0.14	0.042
ROT LIM deg/sec	0.14	0.042

ORM COORDINATE SYSTEM – PL ID 5A (UPLINK)

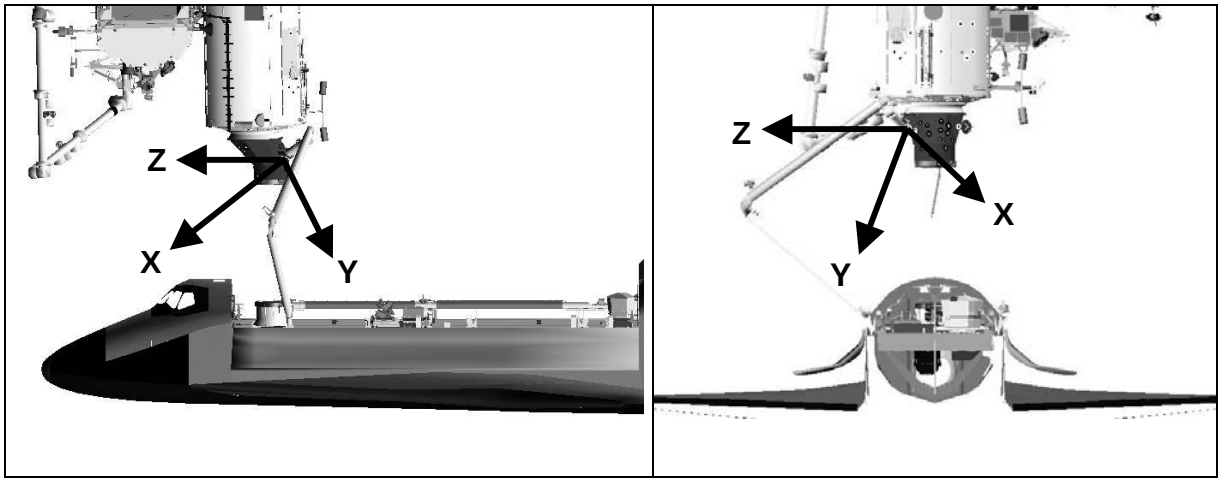

POR:	POR at PMA 2 Port Grapple Fixture	
PURPOSE:	Maneuvering ISS Payload	
RATES:	COARSE	VERN
TRANS LIM ft/sec	0.14	0.042
ROT LIM deg/sec	0.14	0.042

ORM GO/NO-GO CRITERIA

	CONTINUE OPERATIONS IF:		
	GRAPPLE PMA2	CONTINUE ORM (HIGH PRIORITY)	FLIGHT RULES REF
A. PORT JETTISON (2)	1 ↓	1 ↓	{A12-181}
B. PORT MPM (4) DEP INDICATIONS (8)	SHOULDER 1 ↓	SHOULDER 1 ↓	{A12-72}
C. PORT MPM STOW MOTORS (2)	2 ↓ [4]	2 ↓ [4]	{A12-72}
D. PORT MRL LAT CAP (3)	[2]	[2]	{A12-73}
E. AUTO MODE (1)	1 ↓	1 ↓	{LF1_A12-22}
F. MANUAL AUG MODE (1) G. SINGLE MODE (1) H. DIRECT MODE (1)	2 ↓ [1]	3 ↓	{A12-111}
I. BACKUP MODE (1)	0 ↓		{A12-111}
J. BRAKES (6)	0 ↓	0 ↓	{A12-115}
K. AUTO BRAKES (1)	0 ↓ [3]	0 ↓ [3]	{A12-116}
L. CAPTURE & RIGIDIZE (2)	1 ↓		{A12-161}
M. DERIGIDIZE (2)	2 ↓	2 ↓	{A12-161}
N. RELEASE (2) O. BACKUP RELEASE (1)	3 ↓ [4]	3 ↓ [4]	{A12-161}
P. SRMS THERMAL	REQUIRED	REQUIRED	{A12-3}

NOTES:

[1] ASSUMES VEHICLE SEP CAN BE PERFORMED IN A SINGLE JOINT MODE OR JUST OPEN HOOKS FOR RELEASE

[2] CONTINUE OPERATIONS EVEN IF ONE FAILURE WILL RESULT IN THE INABILITY TO LATCH AT LEAST TWO MRLs (ASSUMES CURRENTLY HAVE TWO-LATCH CAPABILITY). EVA CAPABILITY REQUIRED FOR SRMS STRAPDOWN

[3] COMPUTER-SUPPORTED MODES UNAVAILABLE WITH LOSS OF AUTOBRAKES, BUT OPERATIONS IN DIRECT AND BACKUP CAN CONTINUE WITH THE LOSS OF AUTOBRAKES

[4] EVA CAPABILITY EXISTS FOR THE FOLLOWING CONTINGENCIES

– GRAPPLE FIXTURE (GF) RELEASE

– MPM DEPLOY/STOW

ORM ATTITUDE CONTROL CONSTRAINTS

ATTITUDE CONTROL & OPS [1] / ORM CONFIG	STS ATTITUDE CONTROL		ISS ATTITUDE CONTROL			OPERATIONS				
	VRCS	PRCS	CMG - TA		THRUSTERS ONLY	CREW EXERCISE (ISOLATED OR UN-ISOLATED)	EVA OPS	REBOOST (STS, SM, PROG)	UNDOCK-ING (STS/ RS)	DOCK-ING (STS/ RS)
			MOM MGMT OR ATT HOLD	DESAT REQUEST						
SRMS MNVR TO ORBITER UNDOCK POSITION	NOT OK	NOT OK	OK	ENA	NOT OK [5]	OK		NOT OK		
SRMS IN ORBITER UNDOCK POSITION	NOT OK	NOT OK	OK [2]	ENA [2]	NOT OK [5]	OK [3]		NOT OK	OK	
SRMS MNVR TO ORBITER REPAIR POSITION	NOT OK	NOT OK	OK [2]	ENA[2]	NOT OK [5]	OK [3]		NOT OK		
SRMS IN ORBITER REPAIR POSITION	NOT OK	NOT OK	OK [2]	ENA [2]	NOT OK [5]	OK [3] [4]	OK	NOT OK		
SRMS MNVR TO ORBITER OVERNIGHT PARK POSITION	NOT OK	NOT OK	OK [2]	ENA [2]	NOT OK [5]	OK [3]		NOT OK		
SRMS IN ORBITER OVERNIGHT PARK POSITION	NOT OK	NOT OK	OK [2]	ENA [2]	NOT OK [5]	OK [3]		NOT OK	OK	

NOTES:

[1] KEY: ☐ – ACS OR OPS ALLOWED. ■ – ACS OR OPS NOT ALLOWED ▨ – NOT ANALYZED. ®[DN 59]

[2] ATTITUDE CONTROL ALLOWED USING ORM-SPECIFIC THRUSTER FIRING CRITERIA

[3] THE FOLLOWING EXERCISE EQUIPMENT MAY BE USED:

CEVIS, TVIS, SM ERGOMETER, RUSSIAN RED, ORBITER ERGOMETER

[4] EXERCISE NOT OK DURING EVA DUE TO EXCESSIVE VIBRATION. OK FOR CEVIS PRE-BREATHE ACTIVITY

[5] RS THRUSTER CONTROL IS NOT OK DUE TO EXCESSIVE SRMS MOTION. REFERENCE RULE {LF1_C2-**TBD**} FOR ORM GO/NO-GO CRITERIA. ®[CR 6889]

This Page Intentionally Blank