NOMINAL MPLM BERTH (CONTINGENCY)

MPLM GRAPPLE ON NODE NADIR (CONTINGENCY)..... FS 8-2
UNINSTALL (CONTINGENCY)..... FS 8-4
BERTH (CONTINGENCY) ..... FS 8-6
ROEU MATE (CONTINGENCY) ..... FS 8-8
UNGRAPPLE IN BAY (CONTINGENCY)..... FS 8-10

MPLM GRAPPLE ON NODE NADIR (CONTINGENCY)

1. SETUP

A7U CCTV – config for grapple
– install PDRS TARGET OVERLAY FOR CTVM
– RMS WRIST, zoom 34.0 HFOV
focus 5 ft
Maintain eyepoint approx 18 in when using grapple overlay

SM 94 PDRS CONTROL
√PL ID, ITEM 3: 0
√INIT ID, ITEM 24: 0

2. MNVR TO PRE-GRAPPLE

MON 1	Elbow(Tip Elbow)
MON 2	**B**(C)

RATE – as reqd (VERN within 10 ft)
BRAKES – OFF (tb-OFF)
MODE – ORB UNL, ENTER

PRE-GRAPPLE posn:

X	Y	Z	PITCH	YAW	ROLL	PL ID
-777	-95	-867	91	320	331	0
SY	SP	EP	WP	WY	WR	
-47.0	+118.9	-92.0	+12.3	-36.5	-75.0	

3. GRAPPLE

MON 1	**EE**(Elbow)
MON 2	C(B)

RATE – VERN (RATE MIN tb-ON)
BRAKES – OFF (tb-OFF)
MODE – END EFF, ENTER

Mnvr to grapple envelope

CAUTION
Monitor EE tb timing to prevent EE motor burnout

EE MODE – AUTO
CAPTURE sw – depress (mom)

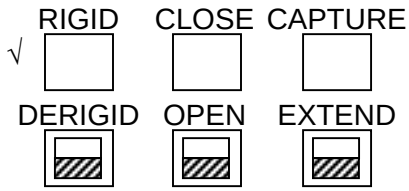

CRITICAL TIMES (28 sec total):
CAPTURE tb – gray, then
CLOSE tb – gray, 3 sec max, then
RIGID tb – gray, 25 sec max

EE MODE – OFF
BRAKES – ON (tb-ON)
√MODE – not DIRECT

SM 94 PDRS CONTROL
PL ID – ITEM 3 +2 EXEC
INIT ID – ITEM 24 +2 EXEC

NOM MPLM BERTH (CONT)

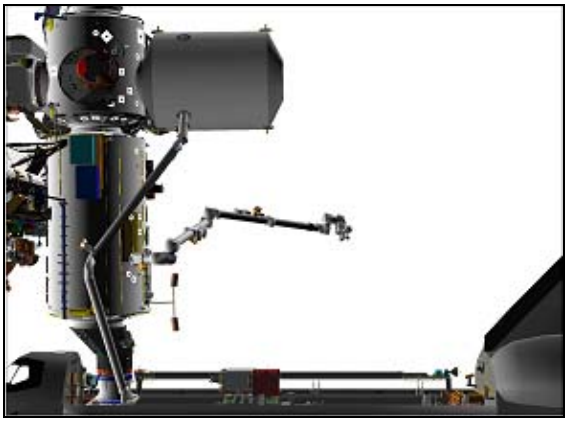

Record POS/ATT and Joint Angles:

	X	Y	Z	PITCH	YAW	ROLL	PL ID
	SY	SP	EP	WP	WY	WR	
Expected	-58.2	+107.3	-77.3	+5.0	-27.5	-83.0	

Review <u>GENERIC END EFFECTOR CUE CARD</u>

MPLM UNINSTALL (CONTINGENCY)

1. SETUP

√1.509 NODE 1 CBM DEMATE, step 9 (SODF: S&M: NOMINAL: CBM) complete

CCTV – config for uninstall

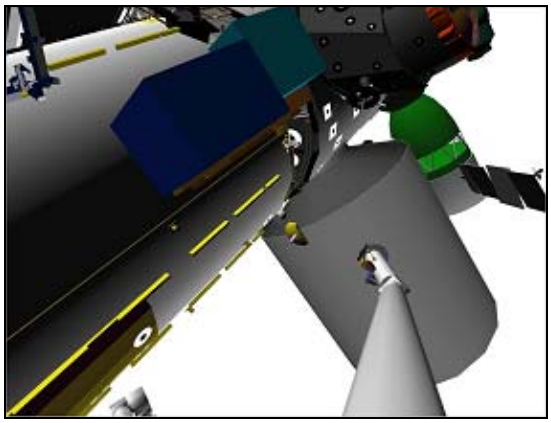

ELBOW (-18,7)

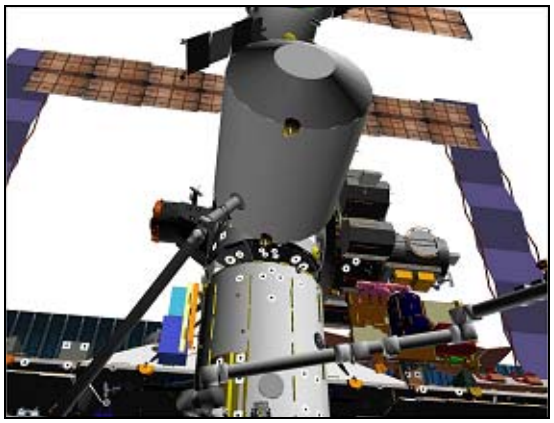

CCTV B (5,40)

PCS MCS: MCS Configuration: US GNC Inhibits

US GNC Inhibits

√Desat Request – Inh

SM 94 PDRS CONTROL

√PL ID, ITEM 3: 2

√INIT ID, ITEM 24: 2

2. MNVR TO MPLM PRE-INSTALL

MON 1	**CBCS**(B or C)
MON 2	Elbow(A)

RATE – VERN (RATE MIN tb-ON)
BRAKES – OFF (tb-OFF)
MODE – ORB LD, ENTER

Mnvr MPLM to PRE-INSTALL posn:

X	Y	Z	PITCH	YAW	ROLL	PL ID
-744	0	-980	1	0	0	2
SY	SP	EP	WP	WY	WR	
-49.5	+103.0	-74.3	+9.5	-34.6	-77.0	

3. <u>MNVR TO MPLM LOW HOVER POSN</u>

MON 1	Elbow(B)
MON 2	**B** → **A**(C)

RATE – as reqd (VERN within 10 ft)
√BRAKES – OFF (tb-OFF)
MODE – ORB LD, ENTER

Mnvr to LOW HOVER

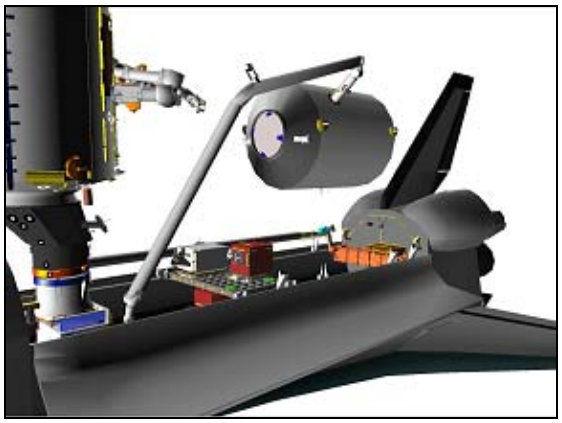

MPLM LOW HOVER posn:

X	Y	Z	PITCH	YAW	ROLL	PL ID
-1106	0	-650	0	0	0	1
-992	0	-636	0	0	270	2
-1126	-3	-549	90	0	0	3
SY	SP	EP	WP	WY	WR	
-13.6	+63.4	-51.0	-94.3	-29.6	-174.3	

MPLM BERTH (CONTINGENCY)

1. SETUP

A7U CCTV – config for berthing
– install MPLM BERTH OVERLAY

Activate KEEL CCTV:

SSP 2 √cb SW PWR 3 (CB2) – cl
MPLM KEEL CAM PWR – ON
HTR/ILLUM PWR – OFF, then ON for HI
(repeat for MED,LO,OFF)

PCS MCS: MCS Configuration: US GNC Inhibits
US GNC Inhibits

√Desat Request – Inh

SM 94 PDRS CONTROL
PL ID – ITEM 3 +1(3) EXEC
INIT ID – ITEM 24 +1(3) EXEC

2. MNVR MPLM TO LATCHES

MON 1	**Keel**(Tip LEE)
MON 2	A → B/C Mux(D/A Mux)

RATE – VERN (RATE MIN tb-ON)
BRAKES – OFF (tb-OFF)
MODE – ORB LD, ENTER

NOTE

Monitor clearance between MPLM STBD trunnions and the OBSS. Clearance can be monitored with Cameras C and D. Minimum clearance is 3 in

A6U √PL RETEN PL SEL – 1
√RDY 1,2,3,4,5 tb (five) – bp

Mnvr MPLM to BERTHED posn (Insert PL ID 1 and 3 data from MPLM GRAPPLE IN BAY):

X	Y	Z	PITCH	YAW	ROLL	PL ID
						1
						3
SY	SP	EP	WP	WY	WR	

NOTE

Wait until PRLAs latched before applying brakes

When vertical translation complete,

A6U √PL RETEN PL SEL – 1
√RDY 1,2,3,4 tb (four) – gray
√LAT 1,2,3,4 tb (four) – REL

SM 97 PL RETENTION

√RDY–FOR-LAT 1,2,3,4 (eight): 1
√LAT 1,2,3,4,5 (ten): 0

* If any LAT msw shows '1', expect *
* single motor time (60 sec) *

3. <u>ACTIVATE LATCHES</u>
PL RETEN LOGIC PWR SYS 1,2 (two) – ON

R13L PL BAY MECH PWR SYS 1,2 (two) – ON

4. <u>AKA LATCH</u>
A6U √PL RETEN LAT 5 tb – REL

Note single motor time (> 30 sec)
PL RETEN LAT 5 – LAT (tb-LAT), 60 sec max
– OFF
√RDY 5 tb – gray

5. <u>PRLA LATCH</u>
√PL RETEN LAT 1,2,3,4 tb (four) – REL
√RDY 1,2,3,4 tb (four) – gray

Note single motor time (> 30 sec)
PL RETEN LAT 1,2 (two) – LAT (tb-LAT), 60 sec max
– OFF
3,4 (two) – LAT (tb-LAT), 60 sec max
– OFF

6. <u>DEACTIVATE LATCHES</u>
PL RETEN LOGIC PWR SYS 1,2 (two) – OFF

R13L PL BAY MECH PWR SYS 1,2 (two) – OFF

BRAKES – ON (tb-ON)
√MODE – not DIRECT

PCS MCS: MCS Configuration: US GNC Inhibits
US GNC Inhibits

cmd Desat Request Enable (Verify – Ena)

Deactivate KEEL CCTV:
SSP 2 MPLM KEEL CAM HTR/ILLUM PWR – Toggle until illuminator OFF
(leave sw in ON posn)
PWR – OFF

MPLM ROEU MATE (CONTINGENCY)

1. <u>SETUP</u>

A7U CCTV – config for ROEU mate
– install <u>ROEU A6U PANEL OVERLAY</u>

MON 1	**Elbow**
MON 2	D

PL RETEN PL SEL – 2

SM 97 PL RETENTION
√LAT 1,2,3 (six): 0

* If LATCH 2,3 LAT msw shows '1,' drive *
* latch for single motor time *

ELEC CONT
√ [▨]

RELAX	DEMATE	RELEASE
√ REL	REL	REL
	MATE	LATCH

2. <u>ACTIVATE ROEU</u>

A6U PL RETEN LOGIC PWR SYS 1,2 (two) – ON

R13L PL BAY MECH PWR SYS 1,2 (two) – ON

3. <u>MATE ROEU</u>

Note single motor time (> 30 sec)
A6U DEMATE/MATE – MATE (tb-LAT), 60 sec max
– OFF

ELEC CONT
[▨]

RELAX	DEMATE	RELEASE
√ [▨]	LAT	REL
	MATE	LATCH

4. <u>LATCH LATCHES</u>

Note single motor time (> 20 sec)
RELEASE/LATCH – LATCH (tb-LAT), 40 sec max
– OFF

ELEC CONT
√ [ ]

RELAX	DEMATE	RELEASE
√ [▨]	LAT	LAT
	MATE	LATCH

5. <u>RELAX ROEU</u>

<u>NOTE</u>

Monitor PL SEL 2 LATCH 1 REL SYS msws on SPEC 97

Note single motor time (> 12 sec)
RELAX – RELAX (tb-REL), 24 sec max

When LATCH 1 REL A(B) msw changes to 1:
RELAX – OFF

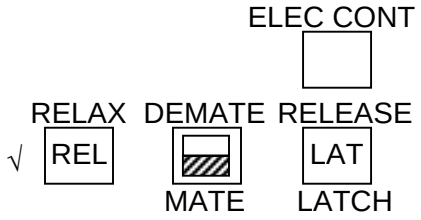

6. <u>DEACTIVATE ROEU</u>

A6U PL RETEN LOGIC PWR SYS 1,2 (two) – OFF
PL SEL – MON

R13L PL BAY MECH PWR SYS 1,2 (two) – OFF

MPLM UNGRAPPLE IN BAY (CONTINGENCY)

1. SETUP

A7U CCTV – config for ungrapple
– RMS WRIST, zoom 34.0 HFOV
focus 5 ft

SM 94 PDRS CONTROL
PL ID – ITEM 3 +0 EXEC
INIT ID – ITEM 24 +0 EXEC

2. MPLM UNGRAPPLE

MON 1	**EE**(Elbow)
MON 2	A, Mux A/B(B)

RATE – VERN (RATE MIN tb-ON) within 10 ft
BRAKES – OFF (tb-OFF)
MODE – END EFF, ENTER

CAUTION
Monitor EE tb timing to prevent EE motor burnout

When OPEN tb – gray,
mnvr arm clear of GF and MPLM

EE MODE – AUTO
RELEASE sw – depress (mom)

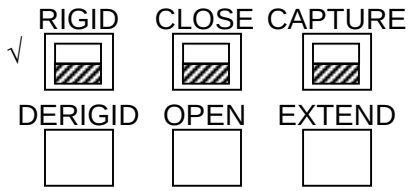

CRITICAL TIMES (28 sec total):
DERIGID tb – gray, 5 sec max, then
OPEN tb – gray, 3 sec max, then
EXTEND tb – gray, 20 sec max

EE MODE – OFF

BRAKES – ON (tb-ON)
√MODE – not DIRECT
JOINT – CRIT TEMP

```
*  If manual release reqd:                                  *
*      EE MODE          – MAN                               *
*          MAN CONTR    – DERIGID (hold until DERIGID       *
*                         tb-gray, 5 sec max)               *
*                                                           *
*          RELEASE sw   – depress (hold until OPEN          *
*                         tb-gray, 3 sec max)               *
*      Mnvr arm clear, then                                 *
*      EE MAN CONTR     – DERIGID (hold until EXTEND        *
*                         tb-gray, 20 sec max)              *
*          MODE         – OFF                               *
*      BRAKES           – ON                                *
```