| Module | J# | Pin# | Signal Name | Signal Description | Wire Size (AWG) | Wire Type | Signal Type | ICD Para. Reference |
|---|---|---|---|---|---|---|---|---|
| 1A4 | J6 | 1 | PA.RTN.VIS1 | VIS Ch.1 Det.1 Preamp Output Return | 26 | TS(1,2) | Internal | |
| 1A4 | J6 | 2 | PA.OUT.VIS1 | VIS Ch.1 Det.1 Preamp Output | 26 | TS(1,2) | Internal | |
| 1A4 | J6 | 3 | PA.RTN.VIS2 | VIS Ch.1 Det.2 Preamp Output Return | 26 | TS(3,4) | Internal | |
| 1A4 | J6 | 4 | PA.OUT.VIS2 | VIS Ch.1 Det.2 Preamp Output | 26 | TS(3,4) | Internal | |
| 1A4 | J6 | 5 | PA.RTN.VIS3 | VIS Ch.1 Det.3 Preamp Output Return | 26 | TS(5,6) | Internal | |
| 1A4 | J6 | 6 | PA.OUT.VIS3 | VIS Ch.1 Det.3 Preamp Output | 26 | TS(5,6) | Internal | |
| 1A4 | J6 | 7 | PA.RTN.VIS4 | VIS Ch.1 Det.4 Preamp Output Return | 26 | TS(7,8) | Internal | |
| 1A4 | J6 | 8 | PA.OUT.VIS4 | VIS Ch.1 Det.4 Preamp Output | 26 | TS(7,8) | Internal | |
| 1A4 | J6 | 9 | PA.RTN.VIS5 | VIS Ch.1 Det.5 Preamp Output Return | 26 | TS(9,10) | Internal | |
| 1A4 | J6 | 10 | PA.OUT.VIS5 | VIS Ch.1 Det.5 Preamp Output | 26 | TS(9,10) | Internal | |
| 1A4 | J6 | 11 | PA.RTN.VIS6 | VIS Ch.1 Det.6 Preamp Output Return | 26 | TS(11,12) | Internal | |
| 1A4 | J6 | 12 | PA.OUT.VIS6 | VIS Ch.1 Det.6 Preamp Output | 26 | TS(11,12) | Internal | |
| 1A4 | J6 | 13 | PA.RTN.VIS7 | VIS Ch.1 Det.7 Preamp Output Return | 26 | TS(13,14) | Internal | |
| 1A4 | J6 | 14 | PA.OUT.VIS7 | VIS Ch.1 Det.7 Preamp Output | 26 | TS(13,14) | Internal | |
| 1A4 | J6 | 15 | PA.RTN.VIS8 | VIS Ch.1 Det.8 Preamp Output Return | 26 | TS(15,16) | Internal | |
| 1A4 | J6 | 16 | PA.OUT.VIS8 | VIS Ch.1 Det.8 Preamp Output | 26 | TS(15,16) | Internal | |
| 1A4 | J6 | 17 | | Unused | | | Internal | |
| 1A4 | J6 | 18 | PA.OUT.2A(1) | IR Ch.2 Det.A Preamp Output Side 1 | 26 | TS(18,19) | Internal | |
| 1A4 | J6 | 19 | PA.RTN.2A(1) | IR Ch.2 Det.A Preamp Output Return Side 1 | 26 | TS(18,19) | Internal | |
| 1A4 | J6 | 20 | PA.OUT.2A(2) | IR Ch.2 Det.A Preamp Output Side 2 | 26 | TS(20,21) | Internal | |
| 1A4 | J6 | 21 | PA.RTN.2A(2) | IR Ch.2 Det.A Preamp Output Return Side 2 | 26 | TS(20,21) | Internal | |
| 1A4 | J6 | 22 | PA.OUT.2B(1) | IR Ch.2 Det.B Preamp Output Side 1 | 26 | TS(22,23) | Internal | |
| 1A4 | J6 | 23 | PA.RTN.2B(1) | IR Ch.2 Det.B Preamp Output Return Side 1 | 26 | TS(22,23) | Internal | |
| 1A4 | J6 | 24 | PA.OUT.2B(2) | IR Ch.2 Det.B Preamp Output Side 2 | 26 | TS(24,25) | Internal | |
| 1A4 | J6 | 25 | PA.RTN.2B(2) | IR Ch.2 Det.B Preamp Output Return Side 2 | 26 | TS(24,25) | Internal | |
| 1A4 | J6 | 26 | PA.OUT.3A(1) | IR Ch.3 Det.A Preamp Output Side 1 | 26 | TS(26,27) | Internal | |
| 1A4 | J6 | 27 | PA.RTN.3A(1) | IR Ch.3 Det.A Preamp Output Return Side 1 | 26 | TS(26,27) | Internal | |
| 1A4 | J6 | 28 | PA.OUT.3A(2) | IR Ch.3 Det.A Preamp Output Side 2 | 26 | TS(28,29) | Internal | |
| 1A4 | J6 | 29 | PA.RTN.3A(2) | IR Ch.3 Det.A Preamp Output Return Side 2 | 26 | TS(28,29) | Internal | |
| 1A4 | J6 | 30 | PA.OUT.4A(1) | IR Ch.4 Det.A Preamp Output Side 1 | 26 | TS(30,31) | Internal | |
| 1A4 | J6 | 31 | PA.RTN.4A(1) | IR Ch.4 Det.A Preamp Output Return Side 1 | 26 | TS(30,31) | Internal | |
| 1A4 | J6 | 32 | PA.OUT.4A(2) | IR Ch.4 Det.A Preamp Output Side 2 | 26 | TS(32,33) | Internal | |
| 1A4 | J6 | 33 | PA.RTN.4A(2) | IR Ch.4 Det.A Preamp Output Return Side 2 | 26 | TS(32,33) | Internal | |
| 1A4 | J6 | 34 | | Unused | | | Internal | |
| 1A4 | J6 | 35 | KEY | Key | | | Internal | |
| 1A4 | J6 | 36 | PA.OUT.4B(1) | IR Ch.4 Det.B Preamp Output Side 1 | 26 | TS(36,37) | Internal | |
| 1A4 | J6 | 37 | PA.RTN.4B(1) | IR Ch.4 Det.B Preamp Output Return Side 1 | 26 | TS(36,37) | Internal | |
| 1A4 | J6 | 38 | PA.OUT.4B(2) | IR Ch.4 Det.B Preamp Output Side 2 | 26 | TS(38,39) | Internal | |
| 1A4 | J6 | 39 | PA.RTN.4B(2) | IR Ch.4 Det.B Preamp Output Return Side 2 | 26 | TS(38,39) | Internal | |
| 1A4 | J6 | 40 | PA.OUT.5A(1) | IR Ch.5 Det.A Preamp Output Side 1 | 26 | TS(40,41) | Internal | |
| 1A4 | J6 | 41 | PA.RTN.5A(1) | IR Ch.5 Det.A Preamp Output Return Side 1 | 26 | TS(40,41) | Internal | |
| 1A4 | J6 | 42 | PA.OUT.5A(2) | IR Ch.5 Det.A Preamp Output Side 2 | 26 | TS(42,43) | Internal | |
| 1A4 | J6 | 43 | PA.RTN.5A(2) | IR Ch.5 Det.A Preamp Output Return Side 2 | 26 | TS(42,43) | Internal | |
| 1A4 | J6 | 44 | PA.OUT.5B(1) | IR Ch.5 Det.B Preamp Output Side 1 | 26 | TS(44,45) | Internal | |
| 1A4 | J6 | 45 | PA.RTN.5B(1) | IR Ch.5 Det.B Preamp Output Return Side 1 | 26 | TS(44,45) | Internal | |
| 1A4 | J6 | 46 | PA.OUT.5B(2) | IR Ch.5 Det.B Preamp Output Side 2 | 26 | TS(46,47) | Internal | |
| 1A4 | J6 | 47 | PA.RTN.5B(2) | IR Ch.5 Det.B Preamp Output Return Side 2 | 26 | TS(46,47) | Internal | |
| 1A4 | J6 | 48 | ECAL.SM.IR(1) | Electronic Calibration IR Preamp Side 1 | 26 | Single | Internal | |
| 1A4 | J6 | 49 | ECAL.SM.IR(2) | Electronic Calibration IR Preamp Side 2 | 26 | Single | Internal | |
| 1A4 | J6 | 50 | KEY | Key | | | Internal | |

| Module | J# | Pin# | Signal Name | Signal Description | Wire Size (AWG) | Wire Type | Signal Type | ICD Para. Reference |
|---|---|---|---|---|---|---|---|---|
| 1A4 | J7 | 1 | EW.X128S.IN(1) | E-W X128 Sine Side 1 | 26 | TS(1,18) | Internal | |
| 1A4 | J7 | 2 | EW.X1.S.IN(1) | E-W X1 Sine Side 1 | 26 | TS(2,19) | Internal | |
| 1A4 | J7 | 3 | EW.X128S.IN(2) | E-W X128 Sine Side 2 | 26 | TS(3,20) | Internal | |
| 1A4 | J7 | 4 | NS.X1.S.IN(1) | N-S X1 Sine Side 1 | 26 | TS(4,21) | Internal | |
| 1A4 | J7 | 5 | NS.X1.S.IN(2) | N-S X1 Sine Side 2 | 26 | TS(5,22) | Internal | |
| 1A4 | J7 | 6 | NS.X128S.IN(2) | N-S X128 Sine Side 2 | 26 | TS(6,23) | Internal | |
| 1A4 | J7 | 7 | RESERVED | Reserved | | | Internal | |
| 1A4 | J7 | 8 | -9V.SCAN(1) | -9V Scan Side 1 | 22 | T(8,9,10) | Internal | |
| 1A4 | J7 | 9 | 9V.SCAN.RTN(1) | 9V Scan Return Side 1 | 22 | T(8,9,10) | Internal | |
| 1A4 | J7 | 10 | +9V.SCAN(1) | +9V Scan Side 1 | 22 | T(8,9,10) | Internal | |
| 1A4 | J7 | 11 | GROUND | Electronics Module Ground | 24 | Single | Internal | |
| 1A4 | J7 | 12 | NSO.SNDR.IN(2) | N-S Quad Scan Drive Side 2 | 26 | TS(12,13) | Internal | |
| 1A4 | J7 | 13 | NSO.SNDR.RT(2) | N-S Quad Scan Drive Return Side 2 | 26 | TS(12,13) | Internal | |
| 1A4 | J7 | 14 | GROUND | Electronics Module Ground | 24 | Single | Internal | |
| 1A4 | J7 | 15 | EW.SN.DR.RT(1) | E-W Scan Drive Return Side 1 | 26 | TS(15,16) | Internal | |
| 1A4 | J7 | 16 | EW.SN.DR.IN(1) | E-W Scan Drive Side 1 | 26 | TS(15,16) | Internal | |
| 1A4 | J7 | 17 | KEY | Key | | | Internal | |
| 1A4 | J7 | 18 | EW.X128S.RT(1) | E-W X128 Sine Return Side 1 | 26 | TS(1,18) | Internal | |
| 1A4 | J7 | 19 | EW.X1.S.RT(1) | E-W X1 Sine Return Side 1 | 26 | TS(2,19) | Internal | |
| 1A4 | J7 | 20 | EW.X128S.RT(2) | E-W X128 Sine Return Side 2 | 26 | TS(3,20) | Internal | |
| 1A4 | J7 | 21 | NS.X1.S.RT(1) | N-S X1 Sine Return Side 1 | 26 | TS(4,21) | Internal | |
| 1A4 | J7 | 22 | NS.X1.S.RT(2) | N-S X1 Sine Return Side 2 | 26 | TS(5,22) | Internal | |
| 1A4 | J7 | 23 | NS.X128S.RT(2) | N-S X128 Sine Return Side 2 | 26 | TS(6,23) | Internal | |
| 1A4 | J7 | 24 | RESERVED | Reserved | | | Internal | |
| 1A4 | J7 | 25 | -9V.SCAN(2) | -9V Scan Side 2 | 22 | T(25,26,27) | Internal | |
| 1A4 | J7 | 26 | 9V.SCAN.RTN(2) | 9V Scan Return Side 2 | 22 | T(25,26,27) | Internal | |
| 1A4 | J7 | 27 | +9V.SCAN(2) | +9V Scan Side 2 | 22 | T(25,26,27) | Internal | |
| 1A4 | J7 | 28 | GROUND | Electronics Module Ground | 24 | Single | Internal | |
| 1A4 | J7 | 29 | NST.SNDR.IN(1) | N-S True Scan Drive Side 1 | 26 | TS(29,30) | Internal | |
| 1A4 | J7 | 30 | NST.SNDR.RT(1) | N-S True Scan Drive Return Side 1 | 26 | TS(29,30) | Internal | |
| 1A4 | J7 | 31 | GROUND | Electronics Module Ground | 24 | Single | Internal | |
| 1A4 | J7 | 32 | EW.SN.DR.RT(2) | E-W Scan Drive Return Side 2 | 26 | TS(32,33) | Internal | |
| 1A4 | J7 | 33 | EW.SN.DR.IN(2) | E-W Scan Drive Side 2 | 26 | TS(32,33) | Internal | |
| 1A4 | J7 | 34 | KEY | Key | | | Internal | |
| 1A4 | J7 | 35 | EW.X1.S.IN(2) | E-W X1 Sine Side 2 | 26 | TS(35,36) | Internal | |
| 1A4 | J7 | 36 | EW.X1.S.RT(2) | E-W X1 Sine Return Side 2 | 26 | TS(35,36) | Internal | |
| 1A4 | J7 | 37 | NS.X128S.IN(1) | N-S X128 Sine Side 1 | 26 | TS(37,38) | Internal | |
| 1A4 | J7 | 38 | NS.X128S.RT(1) | N-S X128 Sine Return Side 1 | 26 | TS(37,38) | Internal | |
| 1A4 | J7 | 39 | RESERVED | Reserved | | | Internal | |
| 1A4 | J7 | 40 | RESERVED | Reserved | | | Internal | |
| 1A4 | J7 | 41 | +10V.SV.2(1) | +10V Scan Side 1 | 26 | T(41,43) | Internal | |
| 1A4 | J7 | 42 | +10V.SV.2(2) | +10V Scan Side 2 | 26 | T(42,44) | Internal | |
| 1A4 | J7 | 43 | 10V.SV.2 RT(1) | 10V Scan Return Side 1 | 26 | T(41,43) | Internal | |
| 1A4 | J7 | 44 | 10V.SV.2.RT(2) | 10V Scan Return Side 2 | 26 | T(42,44) | Internal | |
| 1A4 | J7 | 45 | GROUND | Electronics Module Ground | 24 | Single | Internal | |
| 1A4 | J7 | 46 | NST.SNDR.IN(2) | N-S True Scan Drive Side 2 | 26 | TS(46 47) | Internal | |
| 1A4 | J7 | 47 | NST.SNDR.RT(2) | N-S True Scan Drive Return Side 2 | 26 | TS(46,47) | Internal | |
| 1A4 | J7 | 48 | GROUND | Electronics Module Ground | 24 | Single | Internal | |
| 1A4 | J7 | 49 | NSO.SNDR.RT(1) | N-S Quad Scan Drive Return Side 1 | 26 | TS(49,50) | Internal | |
| 1A4 | J7 | 50 | NSO.SNDR.IN(1) | N-S Quad Scan Drive Side 1 | 26 | TS(49,50) | Internal | |

| Module | J# | Pin# | Signal Name | Signal Description | Wire Size (AWG) | Wire Type | Signal Type | ICD Para. Reference |
|---|---|---|---|---|---|---|---|---|
| IA4 | J8 | 1 | LV.HTR.OB10(1) | Louver Heater Outboard 10 Watt Side 1 | 24 | Single | S/C, Louver Test (Heater) | 3.4.1.4 |
| IA4 | J8 | 2 | LV.HTR.IB20(1) | Louver Heater Inboard 20 Watt Side 1 | 24 | Single | S/C, Louver Test (Heater) | 3.4.1.4 |
| IA4 | J8 | 3 | LV.HTR.IB10(2) | Louver Heater Inboard 10 Watt Side 2 | 24 | Single | S/C, Louver Test (Heater) | 3.4.1.4 |
| IA4 | J8 | 4 | KEY | Key | | | S/C | |
| IA4 | J8 | 5 | | Unused | | | S/C | |
| IA4 | J8 | 6 | LV.HTR.OBRT(1) | Louver Heater Outboard Return Side 1 | 24 | Single | S/C, Louver Test (Heater) | 3.4.1.4 |
| IA4 | J8 | 7 | LV.HTR.IBRT(1) | Louver Heater Inboard Return Side 1 | 24 | Single | S/C, Louver Test (Heater) | 3.4.1.4 |
| IA4 | J8 | 8 | LV.HTR.OBRT(2) | Louver Heater Outboard Return Side 2 | 24 | Single | S/C, Louver Test (Heater) | 3.4.1.4 |
| IA4 | J8 | 9 | LV.HTR.IBRT(2) | Louver Heater Inboard Return Side 2 | 24 | Single | S/C, Louver Test (Heater) | 3.4.1.4 |
| IA4 | J8 | 10 | CMD.RELAY.RTN | Command Unit 1 Return | 24 | Single | S/C, Pulse Command | 3.5.1.2 |
| IA4 | J8 | 11 | CMD.RELAY.RTN | Command Unit 2 Return | 24 | Single | S/C, Pulse Command | 3.5.1.2 |
| IA4 | J8 | 12 | C.OG1.HIGH.SEL | Cooler Outgas Heat HIGH Select Cmd Unit1 | 26 | Single | S/C, Pulse Command | 3.5.1.2 |
| IA4 | J8 | 13 | C.OG1.ON.LOW | Cooler Outgas Heat ON/LOW Command Unit 1 | 26 | Single | S/C, Pulse Command | 3.5.1.2 |
| IA4 | J8 | 14 | C.OG1.OFF | Cooler Outgas Heat OFF Command Unit 1 | 26 | Single | S/C, Pulse Command | 3.5.1.2 |
| IA4 | J8 | 15 | C.OG2.HIGH.SEL | Cooler Outgas Heat HIGH Select Cmd Unit2 | 26 | Single | S/C, Pulse Command | 3.5.1.2 |
| IA4 | J8 | 16 | C.OG2.ON.LOW | Cooler Outgas Heat ON/LOW Command Unit 2 | 26 | Single | S/C, Pulse Command | 3.5.1.2 |
| IA4 | J8 | 17 | C.OG2.OFF | Cooler Outgas Heat OFF Command Unit 2 | 26 | Single | S/C, Pulse Command | 3.5.1.2 |
| IA4 | J8 | 18 | LV.HTR.OB20(1) | Louver Heater Outboard 20 Watt Side 1 | 24 | Single | S/C, Louver Test (Heater) | 3.4.1.4 |
| IA4 | J8 | 19 | LV.HTR.OB10(2) | Louver Heater Outboard 10 Watt Side 2 | 24 | Single | S/C, Louver Test (Heater) | 3.4.1.4 |
| IA4 | J8 | 20 | RESERVED | Reserved | | | S/C | |
| IA4 | J8 | 21 | | Unused | | | S/C | |
| IA4 | J8 | 22 | BP.ON.LO.1(1) | Thermal Control No 1 ON,LOW Command Unit 1 | 26 | Single | S/C, Pulse Command | 3.5.1.2 |
| IA4 | J8 | 23 | BP.ON.LO.2(1) | Thermal Control No 1 ON,LOW Command Unit 2 | 26 | Single | S/C, Pulse Command | 3.5.1.2 |
| IA4 | J8 | 24 | BP.ON.LO.1(2) | Thermal Control No 2 ON,LOW Command Unit 1 | 26 | Single | S/C, Pulse Command | 3.5.1.2 |
| IA4 | J8 | 25 | BP.ON.LO.2(2) | Thermal Control No 2 ON,LOW Command Unit 2 | 26 | Single | S/C, Pulse Command | 3.5.1.2 |
| IA4 | J8 | 26 | LP.THERM.HI.1 | Thermal Control Heaters HIGH Command Unit 1 | 26 | Single | S/C, Pulse Command | 3.5.1.2 |
| IA4 | J8 | 27 | BP.THERM.HI.2 | Thermal Control Heaters HIGH Command Unit 2 | 26 | Single | S/C, Pulse Command | 3.5.1.2 |
| IA4 | J8 | 28 | BP.THERM.OFF.1 | Thermal Control Heaters OFF Command Unit 1 | 26 | Single | S/C, Pulse Command | 3.5.1.2 |
| IA4 | J8 | 29 | BP.THERM.OFF.2 | Thermal Control Heaters OFF Command Unit 2 | 26 | Single | S/C, Pulse Command | 3.5.1.2 |
| IA4 | J8 | 30 | | Unused | | | S/C | |
| IA4 | J8 | 31 | | Unused | | | S/C | |
| IA4 | J8 | 32 | | Unused | | | S/C | |
| IA4 | J8 | 33 | | Unused | | | S/C | |
| IA4 | J8 | 34 | LV.HTR.IB20(2) | Louver Heater Inboard 20 Watt Side 2 | 24 | Single | S/C, Louver Test (Heater) | 3.4.1.4 |
| IA4 | J8 | 35 | LV.HTR.IB10(1) | Louver Heater Inboard 10 Watt Side 1 | 24 | Single | S/C, Louver Test (Heater) | 3.4.1.4 |
| IA4 | J8 | 36 | LV.HTR.OB20(2) | Louver Heater Outboard 20 Watt Side 2 | 24 | Single | S/C, Louver Test (Heater) | 3.4.1.4 |
| IA4 | J8 | 37 | KEY | Key | | | S/C | |
| IA4 | J8 | 38 | | Unused | | | S/C | |
| IA4 | J8 | 39 | | Unused | | | S/C | |
| IA4 | J8 | 40 | | Unused | | | S/C | |
| IA4 | J8 | 41 | | Unused | | | S/C | |
| IA4 | J8 | 42 | BP.ON.SC(1) | Thermal Control No 1 ON/OFF Status | 26 | Single | S/C, Relay Bi-Level Telemetry | 3.5.2.1 |
| IA4 | J8 | 43 | BP.ON.SC(2) | Thermal Control No 2 ON/OFF Status | 26 | Single | S/C, Relay Bi-Level Telemetry | 3.5.2.1 |
| IA4 | J8 | 44 | LP.LO.SC*(2) | Thermal Control HIGH/LOW Status | 26 | Single | S/C, Relay Bi-Level Telemetry | 3.5.2.1 |
| IA4 | J8 | 45 | C.OG.ON.SC | Cooler Outgas ON/OFF Status | 26 | Single | S/C, Relay Bi-Level Telemetry | 3.5.2.1 |
| IA4 | J8 | 46 | C.OG.LO.SC* | Cooler Outgas HIGH/LOW Status | 26 | Single | S/C, Relay Bi-Level Telemetry | 3.5.2.1 |
| IA4 | J8 | 47 | | Unused | | | S/C | |
| IA4 | J8 | 48 | | Unused | | | S/C | |
| IA4 | J8 | 49 | TLM.RTN | Bi-Level Telemetry Return | 24 | Single | S/C, Relay Bi-Level Telemetry | 3.5.2.1 |
| IA4 | J8 | 50 | TLM.RTN | Bi-Level Telemetry Return | 24 | Single | S/C, Relay Bi-Level Telemetry | 3.5.2.1 |

| Module | J# | Pin# | Signal Name | Signal Description | Wire Size (AWG) | Wire Type | Signal Type | ICD Para. Reference |
|---|---|---|---|---|---|---|---|---|
| 1A4 | J10 | 1 | VBPH(1) | Fused Bus Power For BP Heaters (VBPHA1) | 22 | Single | Internal | |
| 1A4 | J10 | 2 | VBPH(2) | Fused Bus Power For BP Heaters (VBPHB1) | 22 | Single | Internal | |
| 1A4 | J10 | 3 | VOGH | Bus Power For Cooler Outgas Heater(VDR01) | 20 | Single | Internal | |
| 1A4 | J10 | 4 | | Unused | | | Internal | |
| 1A4 | J10 | 5 | | Unused | | | Internal | |
| 1A4 | J10 | 6 | *PWR.GND* | *Instrument Power Common (COM4)* | *20* | *Single* | Internal | |
| 1A4 | J10 | 7 | SC.CU1.SEL(2) | Command Unit 1 Select Side 2 (C1.SELB) | 26 | Single | Internal | |
| 1A4 | J10 | 8 | SC.CU2.SEL(2) | Command Unit 2 Select Side 2 (C2.SELB) | 26 | Single | Internal | |
| 1A4 | J10 | 9 | SCAN.PWR.ON(1) | Scan Power ON Side 1 (T.SON) | 26 | Single | Internal | |
| 1A4 | J10 | 10 | SON.A | Scan Side B OFF (SON.A) | 26 | T(10,11) | Internal, &S/C Motor Overload Disable | 3.5.5.2 |
| 1A4 | J10 | 11 | SON.RTN | Instrument Power Common (COM3) | 26 | T(10,11)(11,23) | Internal | |
| 1A4 | J10 | 12 | PWR.GND | Instrument Power Common (COM1) | 20 | Single | Internal, &S/C Anti-Contamination | 3.5.5.1 |
| 1A4 | J10 | 13 | -8V.NI.TLM(2) | -8V Telemetry Non-Isolated Side 2 (VA8MB) | 26 | Single | Internal | |
| 1A4 | J10 | 14 | VBPH(1) | Fused Bus Power For BP Heaters (VBPHA2) | 22 | Single | Internal | |
| 1A4 | J10 | 15 | VBPH(2) | Fused Bus Power For BP Heaters (VBPHB2) | 22 | Single | Internal | |
| 1A4 | J10 | 16 | VOGH | Bus Power For Cooler Outgas Heater(VDR02) | 20 | Single | Internal | |
| 1A4 | J10 | 17 | | Unused | | | Internal | |
| 1A4 | J10 | 18 | RESERVED | Reserved | | | Internal | |
| 1A4 | J10 | 19 | SC.CU1.SEL(1) | Command Unit 1 Select Side 1 (C1.SELA) | 26 | Single | Internal | |
| 1A4 | J10 | 20 | SC.CU2.SEL(1) | Command Unit 2 Select Side 1 (C2.SELA) | 26 | Single | Internal | |
| 1A4 | J10 | 21 | SCAN.PWR.ON(2) | Scan Power ON Side 2 (T.SON) | 26 | Single | Internal | |
| 1A4 | J10 | 22 | SIDE.SEL.EN.RTN | Side Select Enable (SEL.EN) | 26 | Single | Internal | |
| 1A4 | J10 | 23 | SON.B | Scan Side A OFF (SON.B) | 26 | T(11,23) | Internal, &S/C Motor Overload Disable | 3.5.5.2 |
| 1A4 | J10 | 24 | PWR.GND | Instrument Power Common (COM2) | 20 | Single | Internal, &S/C Anti-Contamination | 3.5.5.1 |
| 1A4 | J10 | 25 | -8V.NI.TLM(1) | -8V Telemetry Non-Isolated Side 1(VA8MA) | 26 | Single | Internal | |

| Module | J# | Pin# | Signal Name | Signal Description | Wire Size (AWG) | Wire Type | Signal Type | ICD Para. Reference |
|---|---|---|---|---|---|---|---|---|
| IA4 | J11 | 1 | | Unused | | | | |
| IA4 | J11 | 2 | HSG.HTR2.RTN | Housing Heater 2 Return | 26 | Single | Internal | 3.4.1.4 |
| IA4 | J11 | 3 | HSG.HTR2.CATH | Housing Heater 2 Cathode | 26 | Single | Internal | 3.4.1.4 |
| IA4 | J11 | 4 | HSG.HTR1.RTN | Housing Heater 1 Return | 26 | Single | Internal | 3.4.1.4 |
| IA4 | J11 | 5 | HSG.HTR1.CATH | Housing Heater 1 Cathode | 26 | Single | Internal | 3.4.1.4 |
| IA4 | J11 | 6 | RAD.HTRS.RTN | Radiator Heaters Return | 26 | Single | S/C, Anti-Contamination | 3.5.5.1 |
| IA4 | J11 | 7 | RAD.HTRS.CATH | Radiator Heaters Cathode | 26 | Single | S/C, Anti-Contamination | 3.5.5.1 |
| IA4 | J11 | 8 | PATCH.HTRS.RTN | Patch Heaters Return | 26 | Single | Internal | 3.4.1.4 |
| IA4 | J11 | 9 | PTCH.HTRS.CATH | Patch Heaters Cathode | 26 | Single | Internal | 3.4.1.4 |
| IA4 | J11 | 10 | C.OG.HTR.HIGH | Cooler Outgas Heater HIGH | 26 | Single | S/C, Anti-Contamination | 3.5.5.1 |
| IA4 | J11 | 11 | VAC.HSG.GND | Electronics Module Ground | 24 | Single | Internal | 3.4.1.4 |
| IA4 | J11 | 12 | PATCH.GND | Electronics Module Ground | 24 | Single | Internal | 3.4.1.4 |
| IA4 | J11 | 13 | GROUND | Electronics Module Ground | 24 | Single | Internal | 3.4.1.4 |
| IA4 | J11 | 14 | RAD.HTR.LOW | Power For Radiator LOW Heater | 26 | Single | Internal | 3.4.1.4 |
| IA4 | J11 | 15 | C.OG.HTR.HIGH | Power For Cooler Outgas HIGH Heaters | 26 | Single | S/C, Anti-Contamination | 3.5.5.1 |
| IA4 | J11 | 16 | | Unused | | | Internal | |
| IA4 | J11 | 17 | | Unused | | | Internal | |
| IA4 | J11 | 18 | | Unused | | | Internal | |
| IA4 | J11 | 19 | HSG.HTR2.RTN | Housing Heater 2 Return | 26 | Single | Internal | 3.4.1.4 |
| IA4 | J11 | 20 | HSG.HTR2.CATH | Housing Heater 2 Cathode | 26 | Single | Internal | 3.4.1.4 |
| IA4 | J11 | 21 | HSG.HTR1.RTN | Housing Heater 1 Return | 26 | Single | Internal | 3.4.1.4 |
| IA4 | J11 | 22 | HSG.HTR1.CATH | Housing Heater 1 Cathode | 26 | Single | Internal | 3.4.1.4 |
| IA4 | J11 | 23 | RAD.HTRS.RTN | Radiator Heaters Return | 26 | Single | S/C, Anti-Contamination | 3.5.5.1 |
| IA4 | J11 | 24 | RAD.HTRS.CATH | Radiator Heaters Cathode | 26 | Single | S/C, Anti-Contamination | 3.5.5.1 |
| IA4 | J11 | 25 | PATCH.HTRS.RTN | Patch Heaters Return | 26 | Single | Internal | 3.4.1.4 |
| IA4 | J11 | 26 | PTCH.HTRS.CATH | Patch Heaters Cathode | 26 | Single | Internal | 3.4.1.4 |
| IA4 | J11 | 27 | C.OG.HTR.HIGH | Cooler Outgas Heater HIGH | 26 | Single | S/C, Anti-Contamination | 3.5.5.1 |
| IA4 | J11 | 28 | RAD.GND | Electronics Module Ground | 24 | Single | Internal | 3.4.1.4 |
| IA4 | J11 | 29 | PATCH.GND | Electronics Module Ground | 24 | Single | Internal | 3.4.1.4 |
| IA4 | J11 | 30 | | Unused | | | Internal | |
| IA4 | J11 | 31 | C.OG.LOW | Power For Cooler Outgas LOW Heaters | 26 | Single | S/C, Anti-Contamination | 3.5.5.1 |
| IA4 | J11 | 32 | | Unused | | | Internal | |
| IA4 | J11 | 33 | | Unused | | | Internal | |
| IA4 | J11 | 34 | | Unused | | | Internal | |
| IA4 | J11 | 35 | HSG.HTR2.RTN | Housing Heater 2 Return | 26 | Single | Internal | 3.4.1.4 |
| IA4 | J11 | 36 | | Unused | | | Internal | |
| IA4 | J11 | 37 | HSG.HTR1.RTN | Housing Heater 1 Return | 26 | Single | Internal | 3.4.1.4 |
| IA4 | J11 | 38 | | Unused | | | Internal | |
| IA4 | J11 | 39 | | Unused | | | Internal | |
| IA4 | J11 | 40 | | Unused | | | Internal | |
| IA4 | J11 | 41 | | Unused | | | Internal | |
| IA4 | J11 | 42 | | Unused | | | Internal | |
| IA4 | J11 | 43 | VAC.HSG.GND | Electronics Module Ground | 24 | Single | Internal | 3.4.1.4 |
| IA4 | J11 | 44 | RAD.GND | Electronics Module Ground | 24 | Single | Internal | 3.4.1.4 |
| IA4 | J11 | 45 | GROUND | Electronics Module Ground | 24 | Single | Internal | 3.4.1.4 |
| IA4 | J11 | 46 | RAD.HTR.LOW | Power For Radiator LOW Heater | 26 | Single | Internal | 3.4.1.4 |
| IA4 | J11 | 47 | C.OG.LOW | Power For Cooler Outgas LOW Heaters | 26 | Single | S/C, Anti-Contamination | 3.5.5.1 |
| IA4 | J11 | 48 | | Unused | | | Internal | |
| IA4 | J11 | 49 | | Unused | | | Internal | |
| IA4 | J11 | 50 | | Unused | | | Internal | |

| Module | J# | Pin# | Signal Name | Signal Description | Wire Size (AWG) | Wire Type | Signal Type | ICD Para. Reference |
|---|---|---|---|---|---|---|---|---|
| 1A4 | J12 | 1 | TBD | EED2 Fire | TBD | TBD | S/C, EED Command | 3.5.1.4 |
| 1A4 | J12 | 2 | TBD | EED2 Fire Return | TBD | TBD | S/C, EED Command | 3.5.1.4 |
| 1A4 | J13 | 1 | TBD | EED1 Fire | TBD | TBD | S/C, EED Command | 3.5.1.4 |
| 1A4 | J13 | 2 | TBD | EED1 Fire Return | TBD | TBD | S/C, EED Command | 3.5.1.4 |
| 1A4 | J14 | 1 | TBD | Imager Cooler Cover Deploy Status | TBD | TBD | S/C, Switch Bi-Level Telemetry | 3.5.2.1 |
| 1A4 | J14 | 2 | | Unused | | | S/C | |
| 1A4 | J14 | 3 | TBD | TLM Return | TBD | TBD | S/C, Switch Bi-Level Telemetry | 3.5.2.1 |
| 1A4 | J14 | 4 | | Unused | | | S/C | |
| 1A4 | J14 | 5 | TBD | Imager Cooler Cover Capture Status | TBD | TBD | S/C, Switch Bi-Level Telemetry | 3.5.2.1 |
| 1A4 | J14 | 6 | | Unused | | | S/C | |
| 1A4 | J14 | 7 | TBD | TLM Return | TBD | TBD | S/C, Switch Bi-Level Telemetry | 3.5.2.1 |
| 1A4 | J14 | 8 | | Unused | | | S/C | |
| 1A4 | J14 | 9 | | Unused | | | S/C | |

| Module | J# | Pin# | Signal Name | Signal Description | Wire Size (AWG) | Wire Type | Signal Type | ICD Para. Reference |
|---|---|---|---|---|---|---|---|---|
| 1A6 | J1 | 1 | VB1 | Raw Bus Power | 22 | Single | S/C, Power | 3.4.2 |
| 1A6 | J1 | 2 | VB3 | Raw Bus Power | 22 | Single | S/C, Power | 3.4.2 |
| 1A6 | J1 | 3 | RESERVED | Reserved | | | S/C | |
| 1A6 | J1 | 4 | SC_COM1 | Bus Common From Spacecraft | 22 | Single | S/C, Power | 3.4.2 |
| 1A6 | J1 | 5 | SC_COM3 | Bus Common From Spacecraft | 22 | Single | S/C, Power | 3.4.2 |
| 1A6 | J1 | 6 | | Unused | | | S/C | |
| 1A6 | J1 | 7 | | Unused | | | S/C | |
| 1A6 | J1 | 8 | | Unused | | | S/C | |
| 1A6 | J1 | 9 | VB2 | Raw Bus Power | 22 | Single | S/C, Power | 3.4.2 |
| 1A6 | J1 | 10 | VB4 | Raw Bus Power | 22 | Single | S/C, Power | 3.4.2 |
| 1A6 | J1 | 11 | RESERVED | Reserved | 22 | Single | S/C | |
| 1A6 | J1 | 12 | SC_COM2 | Bus Common From Spacecraft | 22 | Single | S/C, Power | 3.4.2 |
| 1A6 | J1 | 13 | SC_COM4 | Bus Common From Spacecraft | 22&26 | Single | S/C, Power | 3.4.2 |
| 1A6 | J1 | 14 | | Unused | | | S/C | |
| 1A6 | J1 | 15 | | Unused | | | S/C | |
| 1A6 | J2 | 1 | VBPH(1) | Fused Bus Power For BP Heaters (VBPHA1) | 22 | Single | Internal | |
| 1A6 | J2 | 2 | VBPH(2) | Fused Bus Power For BP Heaters (VBPHB1) | 22 | Single | Internal | |
| 1A6 | J2 | 3 | VOGH | Bus Power For Cooler Outgas Heater(VDR01) | 20 | Single | Internal | |
| 1A6 | J2 | 4 | | Unused | | | Internal | |
| 1A6 | J2 | 5 | | Unused | | | Internal | |
| 1A6 | J2 | 6 | *PWR.GND* | *Instrument Power Common (COM4)* | *20* | *Single* | Internal | |
| 1A6 | J2 | 7 | SC.CU1.SEL(2) | Command Unit 1 Select Side 2 (C1.SELB) | 26 | Single | Internal | |
| 1A6 | J2 | 8 | SC.CU2.SEL(2) | Command Unit 2 Select Side 2 (C2.SELB) | 26 | Single | Internal | |
| 1A6 | J2 | 9 | SCAN.PWR.ON(1) | Scan Power ON Side 1 (T.SON) | 26 | Single | Internal | |
| 1A6 | J2 | 10 | SON.A | Scan Side B OFF (SON.A) | 26 | T(10,11) | Internal, &S/C Motor Overload Disable | 3.5.5.2 |
| 1A6 | J2 | 11 | SON.RTN | Instrument Power Common (COM3) | 26 | T(10,11)(11,23) | Internal | |
| 1A6 | J2 | 12 | PWR.GND | Instrument Power Common (COM1) | 20 | Single | Internal, &S/C Anti-Contamination | 3.5.5.1 |
| 1A6 | J2 | 13 | -8V.NI.TLM(2) | -8V Telemetry Non-Isolated Side 2 (VA8MB) | 26 | Single | Internal | |
| 1A6 | J2 | 14 | VBPH(1) | Fused Bus Power For BP Heaters (VBPHA2) | 22 | Single | Internal | |
| 1A6 | J2 | 15 | VBPH(2) | Fused Bus Power For BP Heaters (VBPHB2) | 22 | Single | Internal | |
| 1A6 | J2 | 16 | VOGH | Bus Power For Cooler Outgas Heater(VDR02) | 20 | Single | Internal | |
| 1A6 | J2 | 17 | | Unused | | | Internal | |
| 1A6 | J2 | 18 | RESERVED | Reserved | | | Internal | |
| 1A6 | J2 | 19 | SC.CU1.SEL(1) | Command Unit 1 Select Side 1 (C1.SELA) | 26 | Single | Internal | |
| 1A6 | J2 | 20 | SC.CU2.SEL(1) | Command Unit 2 Select Side 1 (C2.SELA) | 26 | Single | Internal | |
| 1A6 | J2 | 21 | SCAN.PWR.ON(2) | Scan Power ON Side 2 (T.SON) | 26 | Single | Internal | |
| 1A6 | J2 | 22 | SIDE.SEL.EN.RTN | Side Select Enable (SEL.EN) | 26 | Single | Internal | |
| 1A6 | J2 | 23 | SON.B | Scan Side A OFF (SON.B) | 26 | T(11,23) | Internal, &S/C Motor Overload Disable | 3.5.5.2 |
| 1A6 | J2 | 24 | PWR.GND | Instrument Power Common (COM2) | 20 | Single | Internal, &S/C Anti-Contamination | 3.5.5.1 |
| 1A6 | J2 | 25 | -8V.NI.TLM(1) | -8V Telemetry Non-Isolated Side 1(VA8MA) | 26 | Single | Internal | |

| Module | J# | Pin# | Signal Name | Signal Description | Wire Size (AWG) | Wire Type | Signal Type | ICD Para. Reference |
|---|---|---|---|---|---|---|---|---|
| 1A6 | J3 | 1 | KEY | Key | | | Internal | |
| 1A6 | J3 | 2 | 9V.SCAN.RTN(1) | 9V Scan Return Side 1 (P.RTN) | 22 | TS(2,5,8) | Internal | |
| 1A6 | J3 | 3 | +11V.TLM(1) | +11V Telemetry Supply Side 1 (VT11PA) | 24 | Single | Internal | |
| 1A6 | J3 | 4 | | Unused | | | Internal | |
| 1A6 | J3 | 5 | +9V.SCAN(1) | +9V Scan Supply Side 1 (V9PA) | 22 | TS(2,5,8) | Internal | |
| 1A6 | J3 | 6 | +7V.SCAN.2(1) | +7V2 Scan Supply Side 1 (V7PYA) | 20 | Single | Internal | |
| 1A6 | J3 | 7 | -8V.TLM(1) | -8V Telemetry Supply Side 1 (VT8MA) | 24 | Single | Internal | |
| 1A6 | J3 | 8 | -9V.SCAN(1) | -9V Scan Supply Side 1 (V9MA) | 22 | TS(2,5,8) | Internal | |
| 1A6 | J3 | 9 | RESERVED | Reserved | | | Internal | |
| 1A6 | J3 | 10 | +40V.TLM(1) | +40V Telemetry Supply,Patch Heater Side 1(VT40PA) | 26 | Single | Internal | |
| 1A6 | J3 | 11 | RESERVED | Reserved | | | Internal | |
| 1A6 | J3 | 12 | | Unused | | | Internal | |
| 1A6 | J3 | 13 | | Unused | | | Internal | |
| 1A6 | J3 | 14 | | Unused | | | Internal | |
| 1A6 | J3 | 15 | | Unused | | | Internal | |
| 1A6 | J3 | 16 | PS.SYNC(1) | Power Supply Sync Side 1 (Sync1) | 26 | TS(16,33) | Internal | |
| 1A6 | J3 | 17 | | Unused | | | Internal | |
| 1A6 | J3 | 18 | | Unused | | | Internal | |
| 1A6 | J3 | 19 | +7V.SCAN.1(1) | +7V1 Scan Supply Side 1 (V7PXA) | 20 | Single | Internal | |
| 1A6 | J3 | 20 | +17V.TLM(1) | +17V Telemetry Supply Side 1 (VT17PA) | 24 | Single | Internal | |
| 1A6 | J3 | 21 | +17V.ELE(1) | +17V Electronics Supply Side 1 (V17PA) | 20 | Single | Internal | |
| 1A6 | J3 | 22 | +8V.ELE.2(1) | +8V2 Electronics Supply Side 1 (V8PYA) | 20 | Single | Internal | |
| 1A6 | J3 | 23 | | Unused | | | Internal | |
| 1A6 | J3 | 24 | -17V.ELE(1) | -17V Electronics Supply Side 1 (V17MA) | 20 | Single | Internal | |
| 1A6 | J3 | 25 | -8V.ELE(1) | -8V Electronics Supply Side 1 (V8MA) | 20 | Single | Internal | |
| 1A6 | J3 | 26 | RESERVED | Reserved | | | Internal | |
| 1A6 | J3 | 27 | RESERVED | Reserved | | | Internal | |
| 1A6 | J3 | 28 | | Unused | | | Internal | |
| 1A6 | J3 | 29 | | Unused | | | Internal | |
| 1A6 | J3 | 30 | T.SELA | Instrument Telemetry Side 1 ON (Not Used) | n/a | n/a | Internal | |
| 1A6 | J3 | 31 | PWR.SPLY.TMP | Power Supply Temp (PS.THM) | 26 | Single | Internal | |
| 1A6 | J3 | 32 | | Unused | | | Internal | |
| 1A6 | J3 | 33 | PS.SYNC.RTN(1) | Power Supply Sync Return Side 1 (SyncR1) | 26 | TS(16,33) | Internal | |
| 1A6 | J3 | 34 | GROUND | Electronics Power Return (P.RTN) | 20 | Single | Internal | |
| 1A6 | J3 | 35 | +8V.ELE.1(1) | +8V1 Electronics Supply Side 1 (V8PXA) | 20 | Single | Internal | |
| 1A6 | J3 | 36 | +25V.SCAN(1) | +25V Scan Motor Side 1 (V25PA) | 22 | TS(36,39,40) | Internal | |
| 1A6 | J3 | 37 | +12V.ELE(1) | +12V Electronics Supply Side 1 (V12PA) | 20 | Single | Internal | |
| 1A6 | J3 | 38 | +8V.ELE.3(1) | +8V3 Electronics Supply Side 1 (V8PZA) | 20 | Single | Internal | |
| 1A6 | J3 | 39 | 25V.SCAN.RT(1) | 25V Scan ReturnSide 1 (S.RTN) | 22 | TS(36,39,40) | Internal | |
| 1A6 | J3 | 40 | -25V.SCAN(1) | -25V Scan Motor Side 1 (V25MA) | 22 | TS(36,39,40) | Internal | |
| 1A6 | J3 | 41 | GROUND | Electronics Power Return (P.RTN) | 20 | Single | Internal | |
| 1A6 | J3 | 42 | | Unused | | | Internal | |
| 1A6 | J3 | 43 | | Unused | | | Internal | |
| 1A6 | J3 | 44 | | Unused | | | Internal | |
| 1A6 | J3 | 45 | | Unused | | | Internal | |
| 1A6 | J3 | 46 | GROUND | Telemetry Return From Sense Sensors(T.RTN) | 24 | Single | Internal | |
| 1A6 | J3 | 47 | -3V.REF.1 | -3V Thermistor Ref No.1 (-3V.Ref.1) | 26 | Single | Internal | |
| 1A6 | J3 | 48 | | Unused | | | Internal | |
| 1A6 | J3 | 49 | | Unused | | | Internal | |
| 1A6 | J3 | 50 | KEY | Key | | | Internal | |

| Module | J# | Pin# | Signal Name | Signal Description | Wire Size (AWG) | Wire Type | Signal Type | ICD Para. Reference |
|---|---|---|---|---|---|---|---|---|
| 1A6 | J4 | 1 | | Unused | | | Internal | |
| 1A6 | J4 | 2 | 9V.SCAN.RTN(2) | 9V Scan Return Side 2 (P.RTN) | 22 | TS(2,5,8) | Internal | |
| 1A6 | J4 | 3 | +11V TLM(2) | +11V Telemetry Supply Side 2 (VT11PB) | 24 | Single | Internal | |
| 1A6 | J4 | 4 | | Unused | | | Internal | |
| 1A6 | J4 | 5 | +9V.SCAN(2) | +9V Scan Supply Side 2 (V9PB) | 22 | TS(2,5,8) | Internal | |
| 1A6 | J4 | 6 | +7V.SCAN.2(2) | +7V2 Scan Supply Side 2 (V7PYB) | 20 | Single | Internal | |
| 1A6 | J4 | 7 | -8V.TLM(2) | -8V Telemetry Supply Side 2 (VT8MB) | 24 | Single | Internal | |
| 1A6 | J4 | 8 | -9V.SCAN(2) | -9V Scan Supply Side 2 (V9MB) | 22 | TS(2,5,8) | Internal | |
| 1A6 | J4 | 9 | RESERVED | Reserved | | | Internal | |
| 1A6 | J4 | 10 | +40V.TLM(2) | +40V TLM Supply. Patch Heater Side 2(VT40PB) | 24 | Single | Internal | |
| 1A6 | J4 | 11 | RESERVED | Reserved | | | Internal | |
| 1A6 | J4 | 12 | | Unused | | | Internal | |
| 1A6 | J4 | 13 | | Unused | | | Internal | |
| 1A6 | J4 | 14 | | Unused | | | Internal | |
| 1A6 | J4 | 15 | | Unused | | | Internal | |
| 1A6 | J4 | 16 | PS.SYNC(2) | Power Supply Sync Side 2 (Sync2) | 26 | Single | Internal | |
| 1A6 | J4 | 17 | KEY | Key | | | Internal | |
| 1A6 | J4 | 18 | KEY | Key | | | Internal | |
| 1A6 | J4 | 19 | +7V.SCAN.1(2) | +7V1 Scan Supply Side 2 (V7PXB) | 20 | Single | Internal | |
| 1A6 | J4 | 20 | +17V.TLM(2) | +17V Telemetry Supply Side 2 (VT17PB) | 24 | Single | Internal | |
| 1A6 | J4 | 21 | +17V.ELE(2) | +17V Electronics Supply Side 2 (V17PB) | 20 | Single | Internal | |
| 1A6 | J4 | 22 | +8V.ELE.2(2) | +8V2 Electronics Supply Side 2 (V8PYB) | 20 | Single | Internal | |
| 1A6 | J4 | 23 | | Unused | | | Internal | |
| 1A6 | J4 | 24 | -17V.ELE(2) | -17V Electronics Supply Side 2 (V17MB) | 20 | Single | Internal | |
| 1A6 | J4 | 25 | -8V.ELE(2) | -8V Electronics Supply Side 2 (V8MB) | 20 | Single | Internal | |
| 1A6 | J4 | 26 | RESERVED | Reserved | | | Internal | |
| 1A6 | J4 | 27 | RESERVED | Reserved | | | Internal | |
| 1A6 | J4 | 28 | | Unused | | | Internal | |
| 1A6 | J4 | 29 | | Unused | | | Internal | |
| 1A6 | J4 | 30 | T.SON | Instrument Telemetry Scan Motor ON (Not Used) | n/a | n/a | Internal | |
| 1A6 | J4 | 31 | +INST.CRNT | Positive Instrument Current Sense (PIS) | 26 | Single | Internal | |
| 1A6 | J4 | 32 | | Unused | | | Internal | |
| 1A6 | J4 | 33 | PS.SYNC.RTN(2) | Power Supply Sync Return Side 2 (SyncR2) | 26 | Single | Internal | |
| 1A6 | J4 | 34 | GROUND | Electronics Power Return (P.RTN) | 20 | Single | Internal | |
| 1A6 | J4 | 35 | +8V.ELE.1(2) | +8V1 Electronics Supply Side 2 (V8PXB) | 20 | Single | Internal | |
| 1A6 | J4 | 36 | +25V.SCAN(2) | +25V Scan Motor Side 2 (V25PB) | 22 | TS(36,39,40) | Internal | |
| 1A6 | J4 | 37 | +12V.ELE(2) | +12V Electronics Supply Side 2 (V12PB) | 20 | Single | Internal | |
| 1A6 | J4 | 38 | +8V.ELE.3(2) | +8V3 Electronics Supply Side 2 (V8PZB) | 20 | Single | Internal | |
| 1A6 | J4 | 39 | 25V.SCAN.RT(1) | 25V Scan ReturnSide 1 (S.RTN) | 22 | TS(36,39,40) | Internal | |
| 1A6 | J4 | 40 | -25V.SCAN(2) | -25V Scan Motor Side 2 (V25MB) | 22 | TS(36,39,40) | Internal | |
| 1A6 | J4 | 41 | GROUND | Electronics Power Return (P.RTN) | 20 | Single | Internal | |
| 1A6 | J4 | 42 | | Unused | | | Internal | |
| 1A6 | J4 | 43 | | Unused | | | Internal | |
| 1A6 | J4 | 44 | | Unused | | | Internal | |
| 1A6 | J4 | 45 | | Unused | | | Internal | |
| 1A6 | J4 | 46 | GROUND | Telemetry Return From Sense Sensors(T.RTN) | 24 | Single | Internal | |
| 1A6 | J4 | 47 | -INST.CRNT | Negative Instrument Current Sense (NIS) | 26 | Single | Internal | |
| 1A6 | J4 | 48 | | Unused | | | Internal | |
| 1A6 | J4 | 49 | | Unused | | | Internal | |
| 1A6 | J4 | 50 | | Unused | | | Internal | |

| Module | J# | Pin# | Signal Name | Signal Description | Wire Size (AWG) | Wire Type | Signal Type | ICD Para. Reference |
|---|---|---|---|---|---|---|---|---|
| 1A6 | J5 | 1 | C1.ION | Instrument ON Command Unit 1 | 26 | | S/C, Pulse Command | 3.5.1.2 |
| 1A6 | J5 | 2 | C1.SELA | Electronics Side 1 Select Command Unit 1 | 26 | Single | S/C, Pulse Command | 3.5.1.2 |
| 1A6 | J5 | 3 | C1.SON | Scan Motor ON Command Unit 1 | 26 | Single | S/C, Pulse Command | 3.5.1.2 |
| 1A6 | J5 | 4 | | Unused | | | S/C | |
| 1A6 | J5 | 5 | | Unused | | | S/C | |
| 1A6 | J5 | 6 | C2.ION | Instrument ON Command Unit 2 | 26 | Single | S/C, Pulse Command | 3.5.1.2 |
| 1A6 | J5 | 7 | C2.SELA | Electronics Side 1 Select Command Unit 2 | 26 | Single | S/C, Pulse Command | 3.5.1.2 |
| 1A6 | J5 | 8 | C2.SON | Scan Motor ON Command Unit 2 | 26 | Single | S/C, Pulse Command | 3.5.1.2 |
| 1A6 | J5 | 9 | | Unused | | | S/C | |
| 1A6 | J5 | 10 | | Unused | | | S/C | |
| 1A6 | J5 | 11 | | Unused | | | S/C | |
| 1A6 | J5 | 12 | SC_COM | Bus Voltage Common (Spacecraft) | 26 | Single | S/C, Bi-Level Command | 3.5.1.1 |
| 1A6 | J5 | 13 | | Unused | | | S/C | |
| 1A6 | J5 | 14 | ST.ION | Telemetry Instrument ON | 26 | Single | S/C, Relay Bi-Level Telemetry | 3.5.2.1 |
| 1A6 | J5 | 15 | ST.SON | Telemetry Scan ON | 26 | Single | S/C, Relay Bi-Level Telemetry | 3.5.2.1 |
| 1A6 | J5 | 16 | | Unused | | | S/C | |
| 1A6 | J5 | 17 | | Unused | | | S/C | |
| 1A6 | J5 | 18 | RESERVED | Reserved | | | S/C | |
| 1A6 | J5 | 19 | C2.EON | Electronics ON Command Unit 2 | 26 | Single | S/C, Bi-Level Command | 3.5.1.1 |
| 1A6 | J5 | 20 | C1.IOF | Instrument OFF Command Unit 1 | 26 | Single | S/C, Pulse Command | 3.5.1.2 |
| 1A6 | J5 | 21 | C1.SELB | Electronics Side 2 Select Command Unit 1 | 26 | Single | S/C, Pulse Command | 3.5.1.2 |
| 1A6 | J5 | 22 | C1.SOF | Scan Motor OFF Command Unit 1 | 26 | Single | S/C, Pulse Command | 3.5.1.2 |
| 1A6 | J5 | 23 | | Unused | | | S/C | |
| 1A6 | J5 | 24 | C1.RTN | Command Unit 1 Return | 26 | Single | S/C, Pulse Command | 3.5.1.2 |
| 1A6 | J5 | 25 | C2.IOF | Instrument OFF Command Unit 2 | 26 | Single | S/C, Pulse Command | 3.5.1.2 |
| 1A6 | J5 | 26 | C2.SELB | Electronics Side 2 Select Command Unit 2 | 26 | Single | S/C, Pulse Command | 3.5.1.2 |
| 1A6 | J5 | 27 | C2.SOF | Scan Motor OFF Command Unit 2 | 26 | Single | S/C, Pulse Command | 3.5.1.2 |
| 1A6 | J5 | 28 | | Unused | | | S/C | |
| 1A6 | J5 | 29 | C2.RTN | Command Unit 2 Return | 26 | Single | S/C, Pulse Command | 3.5.1.2 |
| 1A6 | J5 | 30 | | Unused | | | S/C | |
| 1A6 | J5 | 31 | SC_COM | Bus Voltage Common (Spacecraft) | 26 | Single | S/C, Bi-Level Command | 3.5.1.1 |
| 1A6 | J5 | 32 | | Unused | | | S/C | |
| 1A6 | J5 | 33 | ST.SELA | Telemetry Select Side 1 | 26 | Single | S/C, Relay Bi-Level Telemetry | 3.5.2.1 |
| 1A6 | J5 | 34 | | Unused | | | S/C | |
| 1A6 | J5 | 35 | ST.RTN | Telemetry Return From Sense Sensors | 26 | Single | S/C, Relay Bi-Level Telemetry | 3.5.2.1 |
| 1A6 | J5 | 36 | RESERVED | Reserved | | | S/C | |
| 1A6 | J5 | 37 | C1.EON | Electronics ON Command Unit 1 | 26 | Single | S/C, Bi-Level Command | 3.5.1.1 |

| Module | J# | Pin# | Signal Name | Signal Description | Wire Size (AWG) | Wire Type | Signal Type | ICD Para. Reference |
|---|---|---|---|---|---|---|---|---|
| 1A6 | J6 | 1 | VF1 | F1 Test | 22 | Single | Internal, Fuse Test | 3.4.1.4 |
| 1A6 | J6 | 2 | VDPHA2 | Bus Power For Baseplate Heater Side 1 | 20 | Single | Internal, Fuse Test | 3.4.1.4 |
| 1A6 | J6 | 3 | VBPHB1 | Bus Power For Baseplate Heater Side 2 | 20 | Single | Internal, Fuse Test | 3.4.1.4 |
| 1A6 | J6 | 4 | | Unused | | | Internal | |
| 1A6 | J6 | 5 | VF6 | F6 Test | 22 | Single | Internal, Fuse Test | 3.4.1.4 |
| 1A6 | J6 | 6 | VF8 | F8 Test | 22 | Single | Internal, Fuse Test | 3.4.1.4 |
| 1A6 | J6 | 7 | VF10 | F10 Test | 22 | Single | Internal, Fuse Test | 3.4.1.4 |
| 1A6 | J6 | 8 | | Unused | | | Internal | |
| 1A6 | J6 | 9 | | Unused | | | Internal | |
| 1A6 | J6 | 10 | | Unused | | | Internal | |
| 1A6 | J6 | 11 | | Unused | | | Internal | |
| 1A6 | J6 | 12 | | Unused | | | Internal | |
| 1A6 | J6 | 13 | | Unused | | | Internal | |
| 1A6 | J6 | 14 | | Unused | | | Internal | |
| 1A6 | J6 | 15 | | Unused | | | Internal | |
| 1A6 | J6 | 16 | | Unused | | | Internal | |
| 1A6 | J6 | 17 | | Unused | | | Internal | |
| 1A6 | J6 | 18 | VF2 | F2 Test | 22 | Single | Internal, Fuse Test | 3.4.1.4 |
| 1A6 | J6 | 19 | VF3 | F3 Test | 22 | Single | Internal, Fuse Test | 3.4.1.4 |
| 1A6 | J6 | 20 | VBPHB2 | Bus Power For Baseplate Heater Side 2 | 20 | Single | Internal, Fuse Test | 3.4.1.4 |
| 1A6 | J6 | 21 | | Unused | | | Internal | |
| 1A6 | J6 | 22 | VCPC2 | Fused Power For Convertors Side 2 | 20 | Single | Internal, Fuse Test | 3.4.1.4 |
| 1A6 | J6 | 23 | VCPC1 | Fused Power For Convertors Side 1 | 20 | Single | Internal, Fuse Test | 3.4.1.4 |
| 1A6 | J6 | 24 | VCR0 | Fused Power For Cooler Outgas | 20 | Single | Internal, Fuse Test | 3.4.1.4 |
| 1A6 | J6 | 25 | | Unused | | | Internal | |
| 1A6 | J6 | 26 | | Unused | | | Internal | |
| 1A6 | J6 | 27 | | Unused | | | Internal | |
| 1A6 | J6 | 28 | | Unused | | | Internal | |
| 1A6 | J6 | 29 | | Unused | | | Internal | |
| 1A6 | J6 | 30 | | Unused | | | Internal | |
| 1A6 | J6 | 31 | | Unused | | | Internal | |
| 1A6 | J6 | 32 | | Unused | | | Internal | |
| 1A6 | J6 | 33 | | Unused | | | Internal | |
| 1A6 | J6 | 34 | VBPHA1 | Bus Power For Baseplate Heater Side 1 | 20 | Single | Internal, Fuse Test | 3.4.1.4 |
| 1A6 | J6 | 35 | VF4 | F4 Test | 22 | Single | Internal, Fuse Test | 3.4.1.4 |
| 1A6 | J6 | 36 | | Unused | | | Internal | |
| 1A6 | J6 | 37 | VF5 | F5 Test | 22 | Single | Internal, Fuse Test | 3.4.1.4 |
| 1A6 | J6 | 38 | VF7 | F7 Test | 22 | Single | Internal, Fuse Test | 3.4.1.4 |
| 1A6 | J6 | 39 | VF9 | F9 Test | 22 | Single | Internal, Fuse Test | 3.4.1.4 |
| 1A6 | J6 | 40 | | Unused | | | Internal | |
| 1A6 | J6 | 41 | | Unused | | | Internal | |
| 1A6 | J6 | 42 | | Unused | | | Internal | |
| 1A6 | J6 | 43 | | Unused | | | Internal | |
| 1A6 | J6 | 44 | | Unused | | | Internal | |
| 1A6 | J6 | 45 | | Unused | | | Internal | |
| 1A6 | J6 | 46 | | Unused | | | Internal | |
| 1A6 | J6 | 47 | | Unused | | | Internal | |
| 1A6 | J6 | 48 | | Unused | | | Internal | |
| 1A6 | J6 | 49 | | Unused | | | Internal, Fuse Test | 3.4.1.4 |
| 1A6 | J6 | 50 | GROUND | Ground | 22 | Single | Internal | |

| Module | J# | Pin# | Signal Name | Signal Description | Wire Size (AWG) | Wire Type | Signal Type | ICD Para. Reference |
|---|---|---|---|---|---|---|---|---|
| 1A8 | J1 | 1 | EW.X128S.IN(1) | E-W X128 Sine Side 1 | 26 | TS(1,18) | Internal | |
| 1A8 | J1 | 2 | EW.X1.S.IN(1) | E-W X1 Sine Side 1 | 26 | TS(2,19) | Internal | |
| 1A8 | J1 | 3 | EW.X128S.IN(2) | E-W X128 Sine Side 2 | 26 | TS(3,20) | Internal | |
| 1A8 | J1 | 4 | NS.X1.S.IN(1) | N-S X1 Sine Side 1 | 26 | TS(4,21) | Internal | |
| 1A8 | J1 | 5 | NS.X1.S.IN(2) | N-S X1 Sine Side 2 | 26 | TS(5,22) | Internal | |
| 1A8 | J1 | 6 | NS.X128S.IN(2) | N-S X128 Sine Side 2 | 26 | TS(6,23) | Internal | |
| 1A8 | J1 | 7 | RESERVED | Reserved | | | Internal | |
| 1A8 | J1 | 8 | | Unused | | | Internal | |
| 1A8 | J1 | 9 | 9V.SCAN.RTN(1) | 9V Scan Return Side 1 | 24 | Single | Internal | |
| 1A8 | J1 | 10 | | Unused | | | Internal | |
| 1A8 | J1 | 11 | GROUND | Electronics Module Ground | 24 | Single | Internal | |
| 1A8 | J1 | 12 | NSO.SNDR.IN(2) | N-S Quad Scan Drive Side 2 | 26 | TS(12,13) | Internal | |
| 1A8 | J1 | 13 | NSO SNDR.RT(2) | N-S Quad Scan Drive Return Side 2 | 26 | TS(12,13) | Internal | |
| 1A8 | J1 | 14 | GROUND | Electronics Module Ground | 24 | Single | Internal | |
| 1A8 | J1 | 15 | EW.SN.DR.RT(1) | E-W Scan Drive Return Side 1 | 26 | TS(15,16) | Internal | |
| 1A8 | J1 | 16 | EW SN.DR.IN(1) | E-W Scan Drive Side 1 | 26 | TS(15,16) | Internal | |
| 1A8 | J1 | 17 | KEY | Key | | | Internal | |
| 1A8 | J1 | 18 | EW.X128S.RT(1) | E-W X128 Sine Return Side 1 | 26 | TS(1,18) | Internal | |
| 1A8 | J1 | 19 | EW.X1.S.RT(1) | E-W X1 Sine Return Side 1 | 26 | TS(2,19) | Internal | |
| 1A8 | J1 | 20 | EW.X128S.RT(2) | E-W X128 Sine Return Side 2 | 26 | TS(3,20) | Internal | |
| 1A8 | J1 | 21 | NS.X1.S.RT(1) | N-S X1 Sine Return Side 1 | 26 | TS(4,21) | Internal | |
| 1A8 | J1 | 22 | NS.X1.S.RT(2) | N-S X1 Sine Return Side 2 | 26 | TS(5,22) | Internal | |
| 1A8 | J1 | 23 | NS.X128S.RT(2) | N-S X128 Sine Return Side 2 | 26 | TS(6,23) | Internal | |
| 1A8 | J1 | 24 | RESERVED | Reserved | | | Internal | |
| 1A8 | J1 | 25 | | Unused | | | Internal | |
| 1A8 | J1 | 26 | 9V.SCAN.RTN(2) | 9V Scan Return Side 2 | 24 | Single | Internal | |
| 1A8 | J1 | 27 | | Unused | | | Internal | |
| 1A8 | J1 | 28 | GROUND | Electronics Module Ground | 24 | Single | Internal | |
| 1A8 | J1 | 29 | NST.SNDR.IN(1) | N-S True Scan Drive Side 1 | 26 | TS(29,30) | Internal | |
| 1A8 | J1 | 30 | NST SNDR.RT(1) | N-S True Scan Drive Return Side 1 | 26 | TS(29,30) | Internal | |
| 1A8 | J1 | 31 | GROUND | Electronics Module Ground | 24 | Single | Internal | |
| 1A8 | J1 | 32 | EW.SN DR.RT(2) | E-W Scan Drive Return Side 2 | 26 | TS(32,33) | Internal | |
| 1A8 | J1 | 33 | EW.SN DR.IN(2) | E-W Scan Drive Side 2 | 26 | TS(32,33) | Internal | |
| 1A8 | J1 | 34 | KEY | Key | | | Internal | |
| 1A8 | J1 | 35 | EW.X1.S.IN(2) | E-W X1 Sine Side 2 | 26 | TS(35,36) | Internal | |
| 1A8 | J1 | 36 | EW.X1.S.RT(2) | E-W X1 Sine Return Side 2 | 26 | TS(35,36) | Internal | |
| 1A8 | J1 | 37 | NS.X128S.IN(1) | N-S X128 Sine Side 1 | 26 | TS(37,38) | Internal | |
| 1A8 | J1 | 38 | NS.X128S.RT(1) | N-S X128 Sine Return Side 1 | 26 | TS(37,38) | Internal | |
| 1A8 | J1 | 39 | RESERVED | Reserved | | | Internal | |
| 1A8 | J1 | 40 | RESERVED | Reserved | | | Internal | |
| 1A8 | J1 | 41 | +10V.SV.2(1) | +10V Scan Side 1 | 26 | T(41,43) | Internal | |
| 1A8 | J1 | 42 | +10V.SV.2(2) | +10V Scan Side 2 | 26 | T(42,44) | Internal | |
| 1A8 | J1 | 43 | 10V.SV.2.RT(1) | 10V Scan Return Side 1 | 26 | T(41,43) | Internal | |
| 1A8 | J1 | 44 | 10V.SV.2.RT(2) | 10V Scan Return Side 2 | 26 | T(42,44) | Internal | |
| 1A8 | J1 | 45 | GROUND | Electronics Module Ground | 24 | Single | Internal | |
| 1A8 | J1 | 46 | NST.SNDR.IN(2) | N-S True Scan Drive Side 2 | 26 | TS(46,47) | Internal | |
| 1A8 | J1 | 47 | NST.SNDR.RT(2) | N-S True Scan Drive Return Side 2 | 26 | TS(46,47) | Internal | |
| 1A8 | J1 | 48 | GROUND | Electronics Module Ground | 24 | Single | Internal | |
| 1A8 | J1 | 49 | NSQ SNDR RT(1) | N-S Quad Scan Drive Return Side 1 | 26 | TS(49,50) | Internal | |
| 1A8 | J1 | 50 | NSQ SNDR IN(1) | N-S Quad Scan Drive Side 1 | 26 | TS(49,50) | Internal | |

| Module | J# | Pin# | Signal Name | Signal Description | Wire Size (AWG) | Wire Type | Signal Type | ICD Para. Reference |
|---|---|---|---|---|---|---|---|---|
| 1A8 | J2 | 1 | EW.X128C.IN(1) | E-W X128 Cosine Side 1 | 26 | TS(1,18) | Internal | |
| 1A8 | J2 | 2 | EW.X1.C.IN(1) | E-W X1 Cosine Side 1 | 26 | TS(2,19) | Internal | |
| 1A8 | J2 | 3 | EW.X128C.IN(2) | E-W X128 Cosine Side 2 | 26 | TS(3,20) | Internal | |
| 1A8 | J2 | 4 | NS.X1.C.IN(1) | N-S X1 Cosine Side 1 | 26 | TS(4,21) | Internal | |
| 1A8 | J2 | 5 | NS.X1.C.IN(2) | N-S X1 Cosine Side 2 | 26 | TS(5,22) | Internal | |
| 1A8 | J2 | 6 | NS.X128C.IN(2) | N-S X128 Cosine Side 2 | 26 | TS(6,23) | Internal | |
| 1A8 | J2 | 7 | RESERVED | Reserved | | | Internal | |
| 1A8 | J2 | 8 | | Unused | | | Internal | |
| 1A8 | J2 | 9 | | Unused | | | Internal | |
| 1A8 | J2 | 10 | | Unused | | | Internal | |
| 1A8 | J2 | 11 | | Unused | | | Internal | |
| 1A8 | J2 | 12 | | Unused | | | Internal | |
| 1A8 | J2 | 13 | | Unused | | | Internal | |
| 1A8 | J2 | 14 | PATCH.UND.TMP | Cooler Patch Under Temp | 26 | Single | Internal | |
| 1A8 | J2 | 15 | HSG.UND.TMP | Cooler Housing Under Temp | 26 | Single | Internal | |
| 1A8 | J2 | 16 | RAD.UND.TMP | Cooler Radiator Under Temp | 26 | Single | Internal | |
| 1A8 | J2 | 17 | PATCH.HTR | Patch Control Heater | 26 | TS(17,32) | Internal | |
| 1A8 | J2 | 18 | EW.X128C.RT(1) | E-W X128 Cosine Return Side 1 | 26 | TS(1,18) | Internal | |
| 1A8 | J2 | 19 | EW.X1.C.RT(1) | E-W X1 Cosine Return Side 1 | 26 | TS(2,19) | Internal | |
| 1A8 | J2 | 20 | EW.X128C.RT(2) | E-W X128 Cosine Return Side 2 | 26 | TS(3,20) | Internal | |
| 1A8 | J2 | 21 | NS.X1.C.RT(1) | N-S X1 Cosine Return Side 1 | 26 | TS(4,21) | Internal | |
| 1A8 | J2 | 22 | NS.X1.C.RT(2) | N-S X1 Cosine Return Side 2 | 26 | TS(5,22) | Internal | |
| 1A8 | J2 | 23 | NS.X128C.RT(2) | N-S X128 Cosine Return Side 2 | 26 | TS(6,23) | Internal | |
| 1A8 | J2 | 24 | RESERVED | Reserved | | | Internal | |
| 1A8 | J2 | 25 | | Unused | | | Internal | |
| 1A8 | J2 | 26 | | Unused | | | Internal | |
| 1A8 | J2 | 27 | | Unused | | | Internal | |
| 1A8 | J2 | 28 | | Unused | | | Internal | |
| 1A8 | J2 | 29 | | Unused | | | Internal | |
| 1A8 | J2 | 30 | | Unused | | | Internal | |
| 1A8 | J2 | 31 | GROUND | Electronics Module Ground | 26 | Single | Internal | |
| 1A8 | J2 | 32 | PATCH.HTR.RTN | Patch Control Heater Return | 26 | TS(17,32) | Internal | |
| 1A8 | J2 | 33 | KEY | Key | | | Internal | |
| 1A8 | J2 | 34 | KEY | Key | | | Internal | |
| 1A8 | J2 | 35 | EW.X1.C.IN(2) | E-W X1 Cosine Side 2 | 26 | TS(35,36) | Internal | |
| 1A8 | J2 | 36 | EW.X1.C.RT(2) | E-W X1 Cosine Return Side 2 | 26 | TS(35,36) | Internal | |
| 1A8 | J2 | 37 | NS.X128C.IN(1) | N-S X128 Cosine Side 1 | 26 | TS(37,38) | Internal | |
| 1A8 | J2 | 38 | NS.X128C.RT(1) | N-S X128 Cosine Return Side 1 | 26 | TS(37,38) | Internal | |
| 1A8 | J2 | 39 | RESERVED | Reserved | | | Internal | |
| 1A8 | J2 | 40 | RESERVED | Reserved | | | Internal | |
| 1A8 | J2 | 41 | | Unused | | | Internal | |
| 1A8 | J2 | 42 | | Unused | | | Internal | |
| 1A8 | J2 | 43 | EW.I.MTR.TP(1) | E-W Motor Current Test Side 1 | 26 | T(43,44) | Internal | |
| 1A8 | J2 | 44 | EW.I.M.TP.R(1) | E-W Motor Current Test Return Side 1 | 26 | T(43,44) | Internal | |
| 1A8 | J2 | 45 | EW.I.MTR.TP(2) | E-W Motor Current Test Side 2 | 26 | T(45,46) | Internal | |
| 1A8 | J2 | 46 | EW.I.M.TP.R(2) | E-W Motor Current Test Return Side 2 | 26 | T(45,46) | Internal | |
| 1A8 | J2 | 47 | NS.I.MTR.TP(1) | N-S Motor Current Test Side 1 | 26 | T(47,48) | Internal | |
| 1A8 | J2 | 48 | NS.I.M.TP.R(1) | N-S Motor Current Test Return Side 1 | 26 | T(47,48) | Internal | |
| 1A8 | J2 | 49 | NS.I.MTR.TP(2) | N-S Motor Current Test Side 2 | 26 | T(49,50) | Internal | |
| 1A8 | J2 | 50 | NS.I.M.TP.R(2) | N-S Motor Current Test Return Side 2 | 26 | T(49,50) | Internal | |

| Module | J# | Pin# | Signal Name | Signal Description | Wire Size (AWG) | Wire Type | Signal Type | ICD Para. Reference |
|---|---|---|---|---|---|---|---|---|
| 1A8 | J3 | 1 | | Unused | | | S/C | |
| 1A8 | J3 | 2 | DATA.RDY.2(1) | Proportional Command Data Ready Side 1 | 26 | Single | S/C, Proportional Command | 3.5.1.3 |
| 1A8 | J3 | 3 | DATA.RDY.2(2) | Proportional Command Data Ready Side 2 | 26 | Single | S/C, Proportional Command | 3.5.1.3 |
| 1A8 | J3 | 4 | SC.CLK.2(1) | Proportional Command Strobe Side 1 | 26 | Single | S/C, Proportional Command | 3.5.1.3 |
| 1A8 | J3 | 5 | SC.CLK.2(2) | Proportional Command Strobe Side 2 | 26 | Single | S/C, Proportional Command | 3.5.1.3 |
| 1A8 | J3 | 6 | SC.DATA.2(1) | Proportional Command Data Side 1 | 26 | Single | S/C, Proportional Command | 3.5.1.3 |
| 1A8 | J3 | 7 | SC.DATA.2(2) | Proportional Command Data Side 2 | 26 | Single | S/C, Proportional Command | 3.5.1.3 |
| 1A8 | J3 | 8 | GROUND | Proportional Command Return | 26 | Single | S/C, Proportional Command | 3.5.1.3 |
| 1A8 | J3 | 9 | CAL.EN.2 | Auto B.B. Calibrate Enable | 26 | Single | S/C, Pulse Command | 3.5.1.2 |
| 1A8 | J3 | 10 | CAL.DIS.2 | Auto B.B. Calibrate Inhibit | 26 | Single | S/C, Pulse Command | 3.5.1.2 |
| 1A8 | J3 | 11 | PATCH.ON.LO.2 | Patch Temp Control ON LOW | 26 | Single | S/C, Pulse Command | 3.5.1.2 |
| 1A8 | J3 | 12 | PATCH.HI.2 | Patch Temp HIGH Select | 26 | Single | S/C, Pulse Command | 3.5.1.2 |
| 1A8 | J3 | 13 | PATCH.OFF.2 | Patch Temp Control OFF | 26 | Single | S/C, Pulse Command | 3.5.1.2 |
| 1A8 | J3 | 14 | EAST.2 | Space Look EAST | 26 | Single | S/C, Pulse Command | 3.5.1.2 |
| 1A8 | J3 | 15 | WEST.2 | Space Look WEST | 26 | Single | S/C, Pulse Command | 3.5.1.2 |
| 1A8 | J3 | 16 | SCAN.RST.2 | Scan Reset | 26 | Single | S/C, Pulse Command | 3.5.1.2 |
| 1A8 | J3 | 17 | NORM.FR.ST.2 | Normal Frame Start | 26 | Single | S/C, Pulse Command | 3.5.1.2 |
| 1A8 | J3 | 18 | PRTY1.FR.ST.2 | Priority 1 Frame Start | 26 | Single | S/C, Pulse Command | 3.5.1.2 |
| 1A8 | J3 | 19 | PRTY2.FR.ST.2 | Priority 2 Frame Start | 26 | Single | S/C, Pulse Command | 3.5.1.2 |
| 1A8 | J3 | 20 | STAR.FR.ST.2 | Star Frame Start | 26 | Single | S/C, Pulse Command | 3.5.1.2 |
| 1A8 | J3 | 21 | BIAS.ON.2 | Detector Bias ON | 26 | Single | S/C, Pulse Command | 3.5.1.2 |
| 1A8 | J3 | 22 | BIAS.OFF.2 | Detector Bias OFF | 26 | Single | S/C, Pulse Command | 3.5.1.2 |
| 1A8 | J3 | 23 | 8MR.CMD.2 | IMC Range Select HIGH | 26 | Single | S/C, Pulse Command | 3.5.1.2 |
| 1A8 | J3 | 24 | 2MR.CMD.2 | IMC Range Select LOW | 26 | Single | S/C, Pulse Command | 3.5.1.2 |
| 1A8 | J3 | 25 | CEI.SEL.2 | Coherent Error Integrator ON | 26 | Single | S/C, Pulse Command | 3.5.1.2 |
| 1A8 | J3 | 26 | CMD.RELAY.RTN | Command Unit 2 Return | 24 | Single | S/C, Pulse Command | 3.5.1.2 |
| 1A8 | J3 | 27 | CMD.RELAY.RTN | Command Unit 2 Return | 24 | Single | S/C, Pulse Command | 3.5.1.2 |
| 1A8 | J3 | 28 | CHASSIS.GND | Chassis Ground | 26 | Single | S/C, Wideband Data | 3.5.3 |
| 1A8 | J3 | 29 | WB.DATA.RT(2) | Wideband Coax Shield Side 2 | 26 | Single | S/C, Wideband Data | 3.5.3 |
| 1A8 | J3 | 30 | AEI.SEL.2 | Coherent Error Integrator OFF | 26 | Single | S/C, Pulse Command | 3.5.1.2 |
| 1A8 | J3 | 31 | | Unused | | | S/C | |
| 1A8 | J3 | 32 | | Unused | | | S/C | |
| 1A8 | J3 | 33 | | Unused | | | S/C | |
| 1A8 | J3 | 34 | KEY | Key | | | S/C | |
| 1A8 | J3 | 35 | | Unused | | | S/C | |
| 1A8 | J3 | 36 | | Unused | | | S/C | |
| 1A8 | J3 | 37 | | Unused | | | S/C | |
| 1A8 | J3 | 38 | | Unused | | | S/C | |
| 1A8 | J3 | 39 | | Unused | | | S/C | |
| 1A8 | J3 | 40 | | Unused | | | S/C | |
| 1A8 | J3 | 41 | | Unused | | | S/C | |
| 1A8 | J3 | 42 | | Unused | | | S/C | |
| 1A8 | J3 | 43 | | Unused | | | S/C | |
| 1A8 | J3 | 44 | | Unused | | | S/C | |
| 1A8 | J3 | 45 | | Unused | | | S/C | |
| 1A8 | J3 | 46 | | Unused | | | S/C | |
| 1A8 | J3 | 47 | | Unused | | | S/C | |
| 1A8 | J3 | 48 | | Unused | | | S/C | |
| 1A8 | J3 | 49 | | Unused | | | S/C | |
| 1A8 | J3 | 50 | KEY | Key | | | S/C | |

| Module | J# | Pin# | Signal Name | Signal Description | Wire Size (AWG) | Wire Type | Signal Type | ICD Para. Reference |
|---|---|---|---|---|---|---|---|---|
| 1A8 | J4 | 1 | WB.DATA(2) | Wideband Serial Data Side 2 | RG58AU | Coax(Center) | S/C, Wideband Data | 3.5.3 |
| 1A8 | J4 | 2 | WB.DATA.RT(2) | Wideband Serial Data Return Side 2 | RG58AU | Coax(Sheild) | S/C, Wideband Data | 3.5.3 |

| Module | J# | Pin# | Signal Name | Signal Description | Wire Size (AWG) | Wire Type | Signal Type | ICD Para. Reference |
|---|---|---|---|---|---|---|---|---|
| 1A8 | J5 | 1 | | Unused | | | Internal | |
| 1A8 | J5 | 2 | 9V.SCAN.RTN(2) | 9V Scan Return Side 2 (Not Used) | 20 | Single | Internal | |
| 1A8 | J5 | 3 | +11V TLM(2) | +11V Telemetry Supply Side 2 (VT11PB) | 24 | Single | Internal | |
| 1A8 | J5 | 4 | | Unused | | | Internal | |
| 1A8 | J5 | 5 | +9V.SCAN(2) | +9V Scan Supply Side 2 (V9PB) | 22 | Single | Internal | |
| 1A8 | J5 | 6 | +7V.SCAN.2(2) | +7V2 Scan Supply Side 2 (V7PYB) | 20 | Single | Internal | |
| 1A8 | J5 | 7 | -8V.TLM(2) | -8V Telemetry Supply Side 2 (VT8MB) | 24 | Single | Internal | |
| 1A8 | J5 | 8 | -9V.SCAN(2) | -9V Scan Supply Side 2 (V9MB) | 22 | Single | Internal | |
| 1A8 | J5 | 9 | RESERVED | Reserved | | | Internal | |
| 1A8 | J5 | 10 | +40V.TLM(2) | +40V TLM Supply. Patch Heater Side 2(VT40PB) | 26 | Single | Internal | |
| 1A8 | J5 | 11 | RESERVED | Reserved | | | Internal | |
| 1A8 | J5 | 12 | | Unused | | | Internal | |
| 1A8 | J5 | 13 | | Unused | | | Internal | |
| 1A8 | J5 | 14 | | Unused | | | Internal | |
| 1A8 | J5 | 15 | | Unused | | | Internal | |
| 1A8 | J5 | 16 | PS.SYNC(2) | Power Supply Sync Side 2 (Sync2) | 26 | Single | Internal | |
| 1A8 | J5 | 17 | KEY | Key | | | Internal | |
| 1A8 | J5 | 18 | KEY | Key | | | Internal | |
| 1A8 | J5 | 19 | +7V.SCAN.1(2) | +7V1 Scan Supply Side 2 (V7PXB) | 20 | Single | Internal | |
| 1A8 | J5 | 20 | +17V.TLM(2) | +17V Telemetry Supply Side 2 (VT17PB) | 24 | Single | Internal | |
| 1A8 | J5 | 21 | +17V.ELE(2) | +17V Electronics Supply Side 2 (V17PB) | 20 | Single | Internal | |
| 1A8 | J5 | 22 | +8V.ELE.2(2) | +8V2 Electronics Supply Side 2 (V8PYB) | 20 | Single | Internal | |
| 1A8 | J5 | 23 | | Unused | | | Internal | |
| 1A8 | J5 | 24 | -17V.ELE(2) | -17V Electronics Supply Side 2 (V17MB) | 20 | Single | Internal | |
| 1A8 | J5 | 25 | -8V.ELE(2) | -8V Electronics Supply Side 2 (V8MB) | 20 | Single | Internal | |
| 1A8 | J5 | 26 | RESERVED | Reserved | | | Internal | |
| 1A8 | J5 | 27 | RESERVED | Reserved | | | Internal | |
| 1A8 | J5 | 28 | | Unused | | | Internal | |
| 1A8 | J5 | 29 | | Unused | | | Internal | |
| 1A8 | J5 | 30 | | Unused | | | Internal | |
| 1A8 | J5 | 31 | +INST.CRNT | Positive Instrument Current Sense (PIS) | 26 | Single | Internal | |
| 1A8 | J5 | 32 | | Unused | | | Internal | |
| 1A8 | J5 | 33 | PS.SYNC.RTN(2) | Power Supply Sync Return Side 2 (SyncR2) | 26 | Single | Internal | |
| 1A8 | J5 | 34 | GROUND | Electronics Power Return (P.RTN) | 20 | Single | Internal | |
| 1A8 | J5 | 35 | +8V.ELE.1(2) | +8V1 Electronics Supply Side 2 (V8PXB) | 22 | Single | Internal | |
| 1A8 | J5 | 36 | +25V.SCAN(2) | +25V Scan Motor Side 2 (V25PB) | 22 | T(36,40) | Internal | |
| 1A8 | J5 | 37 | +12V.ELE(2) | +12V Electronics Supply Side 2 (V12PB) | 20 | Single | Internal | |
| 1A8 | J5 | 38 | +8V.ELE.3(2) | +8V3 Electronics Supply Side 2 (V8PZB) | 20 | Single | Internal | |
| 1A8 | J5 | 39 | | Unused | | | Internal | |
| 1A8 | J5 | 40 | -25V.SCAN(2) | -25V Scan Motor Side 2 (V25MB) | 22 | T(36,40) | Internal | |
| 1A8 | J5 | 41 | GROUND | Electronics Power Return (P.RTN) | 20 | Single | Internal | |
| 1A8 | J5 | 42 | | Unused | | | Internal | |
| 1A8 | J5 | 43 | | Unused | | | Internal | |
| 1A8 | J5 | 44 | | Unused | | | Internal | |
| 1A8 | J5 | 45 | | Unused | | | Internal | |
| 1A8 | J5 | 46 | GROUND | Telemetry Return From Sense Sensors(T.RTN) | 24 | Single | Internal | |
| 1A8 | J5 | 47 | -INST.CRNT | Negative Instrument Current Sense (NIS) | 26 | Single | Internal | |
| 1A8 | J5 | 48 | | Unused | | | Internal | |
| 1A8 | J5 | 49 | | Unused | | | Internal | |
| 1A8 | J5 | 50 | | Unused | | | Internal | |

| Module | J# | Pin# | Signal Name | Signal Description | Wire Size (AWG) | Wire Type | Signal Type | ICD Para. Reference |
|---|---|---|---|---|---|---|---|---|
| 1A8 | J7 | 1 | KEY | Key | | | Internal | |
| 1A8 | J7 | 2 | BP.TMP1 | Sensor Assy Baseplate Temp No.1 | 26 | Single | Internal | |
| 1A8 | J7 | 3 | BP.TMP2 | Sensor Assy Baseplate Temp No.2 | 26 | Single | Internal | |
| 1A8 | J7 | 4 | BP.TMP3 | Sensor Assy Baseplate Temp No.3 | 26 | Single | Internal | |
| 1A8 | J7 | 5 | BP.TMP4 | Sensor Assy Baseplate Temp No.4 | 26 | Single | Internal | |
| 1A8 | J7 | 6 | BP.TMP5 | Sensor Assy Baseplate Temp No.5 | 26 | Single | Internal | |
| 1A8 | J7 | 7 | BP.TMP6 | Sensor Assy Baseplate Temp No.6 | 26 | Single | Internal | |
| 1A8 | J7 | 8 | BLK.BDY1.TMP | Blackbody Target Temp No.1 | 26 | Single | Internal | |
| 1A8 | J7 | 9 | BLK.BDY2.TMP | Blackbody Target Temp No.2 | 26 | Single | Internal | |
| 1A8 | J7 | 10 | BLK.BDY3.TMP | Blackbody Target Temp No.3 | 26 | Single | Internal | |
| 1A8 | J7 | 11 | BLK.BDY4.TMP | Blackbody Target Temp No.4 | 26 | Single | Internal | |
| 1A8 | J7 | 12 | BLK.BDY5.TMP | Blackbody Target Temp No.5 | 26 | Single | Internal | |
| 1A8 | J7 | 13 | BLK.BDY6.TMP | Blackbody Target Temp No.6 | 26 | Single | Internal | |
| 1A8 | J7 | 14 | BLK.BDY7.TMP | Blackbody Target Temp No.7 | 26 | Single | Internal | |
| 1A8 | J7 | 15 | BLK.BDY8.TMP | Blackbody Target Temp No.8 | 26 | Single | Internal | |
| 1A8 | J7 | 16 | KEY | Key | | | Internal | |
| 1A8 | J7 | 17 | TELES.PR.TMP | Telescope Primary Temp | 26 | Single | Internal | |
| 1A8 | J7 | 18 | TEL.SEC.TMP1 | Telescope Secondary Temp No.1 | 26 | Single | Internal | |
| 1A8 | J7 | 19 | TEL.SEC.TMP2 | Telescope Secondary Temp No.2 | 26 | Single | Internal | |
| 1A8 | J7 | 20 | PR.BAFFLE.TMP1 | Primary Baffle Temp No.1 | 26 | Single | Internal | |
| 1A8 | J7 | 21 | PR.BAFFLE.TMP2 | Primary Baffle Temp No.2 | 26 | Single | Internal | |
| 1A8 | J7 | 22 | SCN.MIR.TMP | Scan Mirror Temp | 26 | Single | Internal | |
| 1A8 | J7 | 23 | AFT.OP.TMP | AFT Optics Temp | 26 | Single | Internal | |
| 1A8 | J7 | 24 | LVR.RAD.TMP | Louver Radiator Temp | 26 | Single | Internal | |
| 1A8 | J7 | 25 | HSG.TMP | Cooler Housing Temp | 26 | Single | Internal | |
| 1A8 | J7 | 26 | RAD.TMP | Cooler Radiator Temp | 26 | Single | Internal | |
| 1A8 | J7 | 27 | WR.TMP | IR Detector Temp | 26 | Single | Internal | |
| 1A8 | J7 | 28 | HTR.BUS.V | Heater Bus +43V Telemetry | 26 | Single | Internal | |
| 1A8 | J7 | 29 | | Unused | | | Internal | |
| 1A8 | J7 | 30 | | Unused | | | Internal | |
| 1A8 | J7 | 31 | +SENSE.A | Thermal Control Current No.1 | 26 | Single | Internal | |
| 1A8 | J7 | 32 | +SENSE.B | Thermal Control Current No.2 | 26 | Single | Internal | |
| 1A8 | J7 | 33 | +SENSE.C | Thermal Control Current No.3 | 26 | Single | Internal | |
| 1A8 | J7 | 34 | +SENSE.D | Thermal Control Current No.4 | 26 | Single | Internal | |
| 1A8 | J7 | 35 | +SENSE.E | Thermal Control Current No.5 | 26 | Single | Internal | |
| 1A8 | J7 | 36 | +SENSE.F | Thermal Control Current No.6 | 26 | Single | Internal | |
| 1A8 | J7 | 37 | -SENSE | Thermal Control Current Return | 26 | Single | Internal | |
| 1A8 | J7 | 38 | BP.ON.SC*(1) | Thermal Control No 1 ON/OFF Status | 26 | Single | Internal | |
| 1A8 | J7 | 39 | BP.ON.SC*(2) | Thermal Control No 2 ON/OFF Status | 26 | Single | Internal | |
| 1A8 | J7 | 40 | BP.LO.SC(1) | Thermal Control HIGH/LOW Status | 26 | Single | Internal | |
| 1A8 | J7 | 41 | COG.ON.OFF.STAT | Cooler Outgas ON/OFF Status | 26 | Single | Internal | |
| 1A8 | J7 | 42 | COG.HI.LO.STAT | Cooler Outgas HIGH/LOW Status | 26 | Single | Internal | |
| 1A8 | J7 | 43 | GROUND | Electronics Module Ground | 26 | Single | Internal | |
| 1A8 | J7 | 44 | *TEL.SEC.TMP3* | *Telescope Secondary Temp No.3* | 26 | *Single* | Internal | |
| 1A8 | J7 | 45 | TEMP.SEL | Radiator Temperature Select | 26 | Single | Internal | |
| 1A8 | J7 | 46 | | Unused | | | Internal | |
| 1A8 | J7 | 47 | | Unused | | | Internal | |
| 1A8 | J7 | 48 | | Unused | | | Internal | |
| 1A8 | J7 | 49 | | Unused | | | Internal | |
| 1A8 | J7 | 50 | | Unused | | | Internal | |

| Module | J# | Pin# | Signal Name | Signal Description | Wire Size (AWG) | Wire Type | Signal Type | ICD Para. Reference |
|---|---|---|---|---|---|---|---|---|
| 1A8 | J8 | 1 | KEY | Key | | | S/C | |
| 1A8 | J8 | 2 | -25V.SCN.C.SC | -25V Servo | 26 | Single | S/C, Analog Telemetry | 3.5.2.2 |
| 1A8 | J8 | 3 | +9V.SCN.C.SC | +9V Servo | 26 | Single | S/C, Analog Telemetry | 3.5.2.2 |
| 1A8 | J8 | 4 | -9V.SCN.C.SC | -9V Servo | 26 | Single | S/C, Analog Telemetry | 3.5.2.2 |
| 1A8 | J8 | 5 | +7V.SCN.1.C.SC | +7V1 Servo | 26 | Single | S/C, Analog Telemetry | 3.5.2.2 |
| 1A8 | J8 | 6 | +7V.SCN.2.C.SC | +7V2 Servo | 26 | Single | S/C, Analog Telemetry | 3.5.2.2 |
| 1A8 | J8 | 7 | | Unused | | | S/C | |
| 1A8 | J8 | 8 | +11V.TLM.C.SC | +11V Telemetry | 26 | Single | S/C, Analog Telemetry | 3.5.2.2 |
| 1A8 | J8 | 9 | -8V.TLM.C.SC | -8V Telemetry | 26 | Single | S/C, Analog Telemetry | 3.5.2.2 |
| 1A8 | J8 | 10 | | Unused | | | S/C | |
| 1A8 | J8 | 11 | | Unused | | | S/C | |
| 1A8 | J8 | 12 | EW.ADM.ERR(1) | E-W Scan Servo Error ADM Side 1 | 26 | T(12,13) | S/C, Servo Error Telemetry | 3.5.2.3 |
| 1A8 | J8 | 13 | EW.ADM.ER.R(1) | E-W Scan Servo Error ADM Return Side 1 | 26 | T(12,13) | S/C, Servo Error Telemetry | 3.5.2.3 |
| 1A8 | J8 | 14 | EW.ADM.ERR(2) | E-W Scan Servo Error ADM Side 2 | 26 | T(14,15) | S/C, Servo Error Telemetry | 3.5.2.3 |
| 1A8 | J8 | 15 | EW.ADM.ER.R(2) | E-W Scan Servo Error ADM Return Side 2 | 26 | T(14,15) | S/C, Servo Error Telemetry | 3.5.2.3 |
| 1A8 | J8 | 16 | | Unused | | | S/C | |
| 1A8 | J8 | 17 | KEY | Key | | | S/C | |
| 1A8 | J8 | 18 | NS.ADM.ERR(1) | N-S Scan Servo Error ADM Side 1 | 26 | T(18,19) | S/C, Servo Error Telemetry | 3.5.2.3 |
| 1A8 | J8 | 19 | NS.ADM.ER.R(1) | N-S Scan Servo Error ADM Return Side 1 | 26 | T(18,19) | S/C, Servo Error Telemetry | 3.5.2.3 |
| 1A8 | J8 | 20 | NS.ADM.ERR(2) | N-S Scan Servo Error ADM Side 2 | 26 | T(20,21) | S/C, Servo Error Telemetry | 3.5.2.3 |
| 1A8 | J8 | 21 | NS.ADM.ER.R(2) | N-S Scan Servo Error ADM Return Side 2 | 26 | T(20,21) | S/C, Servo Error Telemetry | 3.5.2.3 |
| 1A8 | J8 | 22 | | Unused | | | S/C | |
| 1A8 | J8 | 23 | | Unused | | | S/C | |
| 1A8 | J8 | 24 | BBC.IN.PROC | Blackbody Calibrate In Progress Status | 26 | Single | S/C, Transistor Bi-Level Telemetry | 3.5.2.1 |
| 1A8 | J8 | 25 | BBC | Blackbody Calibrate Status | 26 | Single | S/C, Transistor Bi-Level Telemetry | 3.5.2.1 |
| 1A8 | J8 | 26 | CRI | Command Receipt Incomplete Status | 26 | Single | S/C, Transistor Bi-Level Telemetry | 3.5.2.1 |
| 1A8 | J8 | 27 | ELECTRONICS | Imager Electronics Status | 26 | Single | S/C, Transistor Bi-Level Telemetry | 3.5.2.1 |
| 1A8 | J8 | 28 | FRAME.STAT | Frame Scan Status | 26 | Single | S/C, Transistor Bi-Level Telemetry | 3.5.2.1 |
| 1A8 | J8 | 29 | PRTY.FR.ST | Priority Frame Status | 26 | Single | S/C, Transistor Bi-Level Telemetry | 3.5.2.1 |
| 1A8 | J8 | 30 | SC.RST.STAT | Scan Reset Status | 26 | Single | S/C, Transistor Bi-Level Telemetry | 3.5.2.1 |
| 1A8 | J8 | 31 | SPACE.LK.ST | Space Look In Progress Status | 26 | Single | S/C, Transistor Bi-Level Telemetry | 3.5.2.1 |
| 1A8 | J8 | 32 | STAR.SEN.ST.SC | Star Sense Status | 26 | Single | S/C, Transistor Bi-Level Telemetry | 3.5.2.1 |
| 1A8 | J8 | 33 | | Unused | | | S/C | |
| 1A8 | J8 | 34 | | Unused | | | S/C | |
| 1A8 | J8 | 35 | CMD.TRAN.SUSP | Command Transfer Suspended | 26 | Single | S/C, Transistor Bi-Level Telemetry | 3.5.2.1 |
| 1A8 | J8 | 36 | BIAS.PWR.ON(1) | Bias Power Status | 26 | Single | S/C, Relay Bi-Level Telemetry | 3.5.2.1 |
| 1A8 | J8 | 37 | PATCH.ON.SC | Patch Control Status | 26 | Single | S/C, Relay Bi-Level Telemetry | 3.5.2.1 |
| 1A8 | J8 | 38 | PATCH.HI.SC | Patch Control Temp Select | 26 | Single | S/C, Relay Bi-Level Telemetry | 3.5.2.1 |
| 1A8 | J8 | 39 | SPACE.LOOK.SC | Space Look | 26 | Single | S/C, Relay Bi-Level Telemetry | 3.5.2.1 |
| 1A8 | J8 | 40 | NS.SC.8MR(1) | IMC Range Status | 26 | Single | S/C, Relay Bi-Level Telemetry | 3.5.2.1 |
| 1A8 | J8 | 41 | CEI.SEL.OUT(1) | Coherent Error Integrator Status | 26 | Single | S/C, Relay Bi-Level Telemetry | 3.5.2.1 |
| 1A8 | J8 | 42 | TLM.RTN | Bi-Level Telemetry Return 1 | 24 | Single | S/C, Relay Bi-Level Telemetry | 3.5.2.1 |
| 1A8 | J8 | 43 | TLM.RTN | Bi-Level Telemetry Return 2 | 24 | Single | S/C, Relay Bi-Level Telemetry | 3.5.2.1 |
| 1A8 | J8 | 44 | TLM.RTN | Bi-Level Telemetry Return 3 | 24 | Single | S/C, Relay Bi-Level Telemetry | 3.5.2.1 |
| 1A8 | J8 | 45 | GROUND | Analog Telemetry Return 1 | 26 | Single | S/C, Analog Telemetry | 3.5.2.2 |
| 1A8 | J8 | 46 | GROUND | Analog Telemetry Return 2 | 26 | Single | S/C, Analog Telemetry | 3.5.2.2 |
| 1A8 | J8 | 47 | GROUND | Analog Telemetry Return 3 | 26 | Single | S/C, Analog Telemetry | 3.5.2.2 |
| 1A8 | J8 | 48 | GROUND | Analog Telemetry Return 4 | 26 | Single | S/C, Analog Telemetry | 3.5.2.2 |
| 1A8 | J8 | 49 | GROUND | Analog Telemetry Return 5 | 26 | Single | S/C, Analog Telemetry | 3.5.2.2 |
| 1A8 | J8 | 50 | GROUND | Analog Telemetry Return 6 | 26 | Single | S/C, Analog Telemetry | 3.5.2.2 |

| Module | J# | Pin# | Signal Name | Signal Description | Wire Size (AWG) | Wire Type | Signal Type | ICD Para. Reference |
|---|---|---|---|---|---|---|---|---|
| 1A8 | J9 | 1 | KEY | Key | | | S/C | |
| 1A8 | J9 | 2 | ELE.TMP1.SC | Electronics Temp No.1 | 26 | Single | S/C, Analog Telemetry | 3.5.2.2 |
| 1A8 | J9 | 3 | ELE.TMP2.SC | Electronics Temp No.2 | 26 | Single | S/C, Analog Telemetry | 3.5.2.2 |
| 1A8 | J9 | 4 | BP.TMP1.SC | Sensor Assy Baseplate Temp No.1 | 26 | T(4,5) | S/C, Analog Telemetry | 3.5.2.2 |
| 1A8 | J9 | 5 | BP.TMP1.SC.RT | Sensor Assy Baseplate Temp No.1 Return | 26 | T(4,5) | S/C, Analog Telemetry | 3.5.2.2 |
| 1A8 | J9 | 6 | B.BDY1+5.SC | Blackbody Target Temp 1 or 5 | 26 | T(6,7) | S/C, Analog Telemetry | 3.5.2.2 |
| 1A8 | J9 | 7 | B.BDY1+5.SC.RT | Blackbody Target Temp 1 or 5 Return | 26 | T(6,7) | S/C, Analog Telemetry | 3.5.2.2 |
| 1A8 | J9 | 8 | B.BDY2+6.SC | Blackbody Target Temp 2 or 6 | 26 | T(8,9) | S/C, Analog Telemetry | 3.5.2.2 |
| 1A8 | J9 | 9 | B.BDY2+6.SC.RT | Blackbody Target Temp 2 or 6 Return | 26 | T(8,9) | S/C, Analog Telemetry | 3.5.2.2 |
| 1A8 | J9 | 10 | B.BDY3+7.SC | Blackbody Target Temp 3 or 7 | 26 | T(10,11) | S/C, Analog Telemetry | 3.5.2.2 |
| 1A8 | J9 | 11 | B.BDY3+7.SC.RT | Blackbody Target Temp 3 or 7 Return | 26 | T(10,11) | S/C, Analog Telemetry | 3.5.2.2 |
| 1A8 | J9 | 12 | B.BDY4+8.SC | Blackbody Target Temp 4 or 8 | 26 | T(12,13) | S/C, Analog Telemetry | 3.5.2.2 |
| 1A8 | J9 | 13 | B.BDY4+8.SC.RT | Blackbody Target Temp 4 or 8 Return | 26 | T(12,13) | S/C, Analog Telemetry | 3.5.2.2 |
| 1A8 | J9 | 14 | PR.TMP.SC | Telescope Primary Temp | 26 | T(14,15) | S/C, Analog Telemetry | 3.5.2.2 |
| 1A8 | J9 | 15 | PR.TMP.SC.RT | Telescope Primary Temp Return | 26 | T(14,15) | S/C, Analog Telemetry | 3.5.2.2 |
| 1A8 | J9 | 16 | *TEL.SEC.1.SC* | *Telescope Secondary Temp #1* | 26 | T(16,17) | S/C, Analog Telemetry | 3.5.2.2 |
| 1A8 | J9 | 17 | *TEL.SEC.1.SC.RT* | *Telescope Secondary Temp #1 Return* | 26 | T(16,17) | S/C, Analog Telemetry | 3.5.2.2 |
| 1A8 | J9 | 18 | *TEL.SEC.2.SC* | *Telescope Secondary Temp #2* | 26 | *T(18,19)* | S/C, *Analog Telemetry* | 3.5.2.2 |
| 1A8 | J9 | 19 | *TEL.SEC.2.SC.RT* | *Telescope Secondary Temp #2 Return* | 26 | *T(18,19)* | S/C, *Analog Telemetry* | 3.5.2.2 |
| 1A8 | J9 | 20 | *TEL.SEC.3.SC* | *Telescope Secondary Temp #3* | 26 | *T(20,21)* | S/C, *Analog Telemetry* | 3.5.2.2 |
| 1A8 | J9 | 21 | *TEL.SEC.3.SC.RT* | *Telescope Secondary Temp #3 Return* | 26 | *T(20,21)* | S/C, *Analog Telemetry* | 3.5.2.2 |
| 1A8 | J9 | 22 | SCN.MIR.TMP.SC | Scan Mirror Temp | 26 | T(22,23) | S/C, Analog Telemetry | 3.5.2.2 |
| 1A8 | J9 | 23 | SN.MIR.TP.SC.R | Scan Mirror Temp Return | 26 | T(22,23) | S/C, Analog Telemetry | 3.5.2.2 |
| 1A8 | J9 | 24 | AFT.OP.TMP.SC | AFT Optics Temp | 26 | T(24,25) | S/C, Analog Telemetry | 3.5.2.2 |
| 1A8 | J9 | 25 | AFT.OP.TP.SC.R | AFT Optics Temp Return | 26 | T(24,25) | S/C, Analog Telemetry | 3.5.2.2 |
| 1A8 | J9 | 26 | LVR.TMP.SC | Louver Radiator Temp | 26 | T(26,27) | S/C, Analog Telemetry | 3.5.2.2 |
| 1A8 | J9 | 27 | LVR.TMP.SC.RTN | Louver Radiator Temp Return | 26 | T(26,27) | S/C, Analog Telemetry | 3.5.2.2 |
| 1A8 | J9 | 28 | HSG.TMP.SC | Cooler Housing Temp | 26 | Single | S/C, Analog Telemetry | 3.5.2.2 |
| 1A8 | J9 | 29 | RAD.TMP.SC | Cooler Radiator Temp | 26 | Single | S/C, Analog Telemetry | 3.5.2.2 |
| 1A8 | J9 | 30 | NR.TMP.SC | Narrow Range IR Detector Temp | 26 | T(30,31) | S/C, Analog Telemetry | 3.5.2.2 |
| 1A8 | J9 | 31 | NR.TMP.SC.RTN | Narrow Range IR Detector Temp Return | 26 | T(30,31) | S/C, Analog Telemetry | 3.5.2.2 |
| 1A8 | J9 | 32 | KEY | Key | | | S/C | |
| 1A8 | J9 | 33 | WR.TMP.SC | Wide Range IR Detector Temp | 26 | Single | S/C, Analog Telemetry | 3.5.2.2 |
| 1A8 | J9 | 34 | | Unused | | | S/C | |
| 1A8 | J9 | 35 | | Unused | | | S/C | |
| 1A8 | J9 | 36 | | Unused | | | S/C | |
| 1A8 | J9 | 37 | PWR.SUP.TMP.SC | Power Supply Temp | 26 | Single | S/C, Analog Telemetry | 3.5.2.2 |
| 1A8 | J9 | 38 | PC.CNTL.V.SC | Patch Control Voltage | 26 | T(38,39) | S/C, Analog Telemetry | 3.5.2.2 |
| 1A8 | J9 | 39 | PC.CNTL.V.SC.R | Patch Control Voltage Return | 26 | T(38,39) | S/C, Analog Telemetry | 3.5.2.2 |
| 1A8 | J9 | 40 | SCAN.CUR.X.SC | E-W Scan Servo Current | 26 | Single | S/C, Analog Telemetry | 3.5.2.2 |
| 1A8 | J9 | 41 | SCAN.CUR.Y.SC | N-S Scan Servo Current | 26 | Single | S/C, Analog Telemetry | 3.5.2.2 |
| 1A8 | J9 | 42 | INST.CRNT.SC | Imager Instrument Current | 26 | Single | S/C, Analog Telemetry | 3.5.2.2 |
| 1A8 | J9 | 43 | +17V.ELE.C.SC | +17V Electronics | 26 | Single | S/C, Analog Telemetry | 3.5.2.2 |
| 1A8 | J9 | 44 | -17V.ELE.C.SC | -17V Electronics | 26 | Single | S/C, Analog Telemetry | 3.5.2.2 |
| 1A8 | J9 | 45 | +8V.ELE.1.C.SC | +8V1 Electronics | 26 | Single | S/C, Analog Telemetry | 3.5.2.2 |
| 1A8 | J9 | 46 | +8V.ELE.2.C.SC | +8V2 Electronics | 26 | Single | S/C, Analog Telemetry | 3.5.2.2 |
| 1A8 | J9 | 47 | +8V.ELE.3.C.SC | +8V3 Electronics | 26 | Single | S/C, Analog Telemetry | 3.5.2.2 |
| 1A8 | J9 | 48 | -8V.ELE.C.SC | -8V Electronics | 26 | Single | S/C, Analog Telemetry | 3.5.2.2 |
| 1A8 | J9 | 49 | +12V.ELE.C.SC | +12V Electronics | 26 | Single | S/C, Analog Telemetry | 3.5.2.2 |
| 1A8 | J9 | 50 | +25V.SCN.C.SC | +25 Servo | 26 | Single | S/C, Analog Telemetry | 3.5.2.2 |

| Module | J# | Pin# | Signal Name | Signal Description | Wire Size (AWG) | Wire Type | Signal Type | ICD Para. Reference |
|---|---|---|---|---|---|---|---|---|
| 1A8 | J10 | 1 | PA.RTN.VIS1 | VIS Ch.1 Det.1 Preamp Output Return | 26 | TS(1,2) | Internal | |
| 1A8 | J10 | 2 | PA.OUT.VIS1 | VIS Ch.1 Det.1 Preamp Output | 26 | TS(1,2) | Internal | |
| 1A8 | J10 | 3 | PA.RTN.VIS2 | VIS Ch.1 Det.2 Preamp Output Return | 26 | TS(3,4) | Internal | |
| 1A8 | J10 | 4 | PA.OUT.VIS2 | VIS Ch.1 Det.2 Preamp Output | 26 | TS(3,4) | Internal | |
| 1A8 | J10 | 5 | PA.RTN.VIS3 | VIS Ch.1 Det.3 Preamp Output Return | 26 | TS(5,6) | Internal | |
| 1A8 | J10 | 6 | PA.OUT.VIS3 | VIS Ch.1 Det.3 Preamp Output | 26 | TS(5,6) | Internal | |
| 1A8 | J10 | 7 | PA.RTN.VIS4 | VIS Ch.1 Det.4 Preamp Output Return | 26 | TS(7,8) | Internal | |
| 1A8 | J10 | 8 | PA.OUT.VIS4 | VIS Ch.1 Det.4 Preamp Output | 26 | TS(7,8) | Internal | |
| 1A8 | J10 | 9 | PA.RTN.VIS5 | VIS Ch.1 Det.5 Preamp Output Return | 26 | TS(9,10) | Internal | |
| 1A8 | J10 | 10 | PA.OUT.VIS5 | VIS Ch.1 Det.5 Preamp Output | 26 | TS(9,10) | Internal | |
| 1A8 | J10 | 11 | PA.RTN.VIS6 | VIS Ch.1 Det.6 Preamp Output Return | 26 | TS(11,12) | Internal | |
| 1A8 | J10 | 12 | PA.OUT.VIS6 | VIS Ch.1 Det.6 Preamp Output | 26 | TS(11,12) | Internal | |
| 1A8 | J10 | 13 | PA.RTN.VIS7 | VIS Ch.1 Det.7 Preamp Output Return | 26 | TS(13,14) | Internal | |
| 1A8 | J10 | 14 | PA.OUT.VIS7 | VIS Ch.1 Det.7 Preamp Output | 26 | TS(13,14) | Internal | |
| 1A8 | J10 | 15 | PA.RTN.VIS8 | VIS Ch.1 Det.8 Preamp Output Return | 26 | TS(15,16) | Internal | |
| 1A8 | J10 | 16 | PA.OUT.VIS8 | VIS Ch.1 Det.8 Preamp Output | 26 | TS(15,16) | Internal | |
| 1A8 | J10 | 17 | | Unused | | | Internal | |
| 1A8 | J10 | 18 | PA.OUT.2A(1) | IR Ch.2 Det.A Preamp Output Side 1 | 26 | TS(18,19) | Internal | |
| 1A8 | J10 | 19 | PA.RTN.2A(1) | IR Ch.2 Det.A Preamp Output Return Side 1 | 26 | TS(18,19) | Internal | |
| 1A8 | J10 | 20 | PA.OUT.2A(2) | IR Ch.2 Det.A Preamp Output Side 2 | 26 | TS(20,21) | Internal | |
| 1A8 | J10 | 21 | PA.RTN.2A(2) | IR Ch.2 Det.A Preamp Output Return Side 2 | 26 | TS(20,21) | Internal | |
| 1A8 | J10 | 22 | PA.OUT.2B(1) | IR Ch.2 Det.B Preamp Output Side 1 | 26 | TS(22,23) | Internal | |
| 1A8 | J10 | 23 | PA.RTN.2B(1) | IR Ch.2 Det.B Preamp Output Return Side 1 | 26 | TS(22,23) | Internal | |
| 1A8 | J10 | 24 | PA.OUT.2B(2) | IR Ch.2 Det.B Preamp Output Side 2 | 26 | TS(24,25) | Internal | |
| 1A8 | J10 | 25 | PA.RTN.2B(2) | IR Ch.2 Det.B Preamp Output Return Side 2 | 26 | TS(24,25) | Internal | |
| 1A8 | J10 | 26 | PA.OUT.3A(1) | IR Ch.3 Det.A Preamp Output Side 1 | 26 | TS(26,27) | Internal | |
| 1A8 | J10 | 27 | PA.RTN.3A(1) | IR Ch.3 Det.A Preamp Output Return Side 1 | 26 | TS(26,27) | Internal | |
| 1A8 | J10 | 28 | PA.OUT.3A(2) | IR Ch.3 Det.A Preamp Output Side 2 | 26 | TS(28,29) | Internal | |
| 1A8 | J10 | 29 | PA.RTN.3A(2) | IR Ch.3 Det.A Preamp Output Return Side 2 | 26 | TS(28,29) | Internal | |
| 1A8 | J10 | 30 | PA.OUT.4A(1) | IR Ch.4 Det.A Preamp Output Side 1 | 26 | TS(30,31) | Internal | |
| 1A8 | J10 | 31 | PA.RTN.4A(1) | IR Ch.4 Det.A Preamp Output Return Side 1 | 26 | TS(30,31) | Internal | |
| 1A8 | J10 | 32 | PA.OUT.4A(2) | IR Ch.4 Det.A Preamp Output Side 2 | 26 | TS(32,33) | Internal | |
| 1A8 | J10 | 33 | PA.RTN.4A(2) | IR Ch.4 Det.A Preamp Output Return Side 2 | 26 | TS(32,33) | Internal | |
| 1A8 | J10 | 34 | | Unused | | | Internal | |
| 1A8 | J10 | 35 | KEY | Key | | | Internal | |
| 1A8 | J10 | 36 | PA.OUT.4B(1) | IR Ch.4 Det.B Preamp Output Side 1 | 26 | TS(36,37) | Internal | |
| 1A8 | J10 | 37 | PA.RTN.4B(1) | IR Ch.4 Det.B Preamp Output Return Side 1 | 26 | TS(36,37) | Internal | |
| 1A8 | J10 | 38 | PA.OUT.4B(2) | IR Ch.4 Det.B Preamp Output Side 2 | 26 | TS(38,39) | Internal | |
| 1A8 | J10 | 39 | PA.RTN.4B(2) | IR Ch.4 Det.B Preamp Output Return Side 2 | 26 | TS(38,39) | Internal | |
| 1A8 | J10 | 40 | PA.OUT.5A(1) | IR Ch.5 Det.A Preamp Output Side 1 | 26 | TS(40,41) | Internal | |
| 1A8 | J10 | 41 | PA.RTN.5A(1) | IR Ch.5 Det.A Preamp Output Return Side 1 | 26 | TS(40,41) | Internal | |
| 1A8 | J10 | 42 | PA.OUT.5A(2) | IR Ch.5 Det.A Preamp Output Side 2 | 26 | TS(42,43) | Internal | |
| 1A8 | J10 | 43 | PA.RTN.5A(2) | IR Ch.5 Det.A Preamp Output Return Side 2 | 26 | TS(42,43) | Internal | |
| 1A8 | J10 | 44 | PA.OUT.5B(1) | IR Ch.5 Det.B Preamp Output Side 1 | 26 | TS(44,45) | Internal | |
| 1A8 | J10 | 45 | PA.RTN.5B(1) | IR Ch.5 Det.B Preamp Output Return Side 1 | 26 | TS(44,45) | Internal | |
| 1A8 | J10 | 46 | PA.OUT.5B(2) | IR Ch.5 Det.B Preamp Output Side 2 | 26 | TS(46,47) | Internal | |
| 1A8 | J10 | 47 | PA.RTN.5B(2) | IR Ch.5 Det.B Preamp Output Return Side 2 | 26 | TS(46,47) | Internal | |
| 1A8 | J10 | 48 | ECAL.SM.IR(1) | Electronic Calibration IR Preamp Side 1 | 26 | Single | Internal | |
| 1A8 | J10 | 49 | ECAL.SM.IR(2) | Electronic Calibration IR Preamp Side 2 | 26 | Single | Internal | |
| 1A8 | J10 | 50 | KEY | Key | | | Internal | |

| Module | J# | Pin# | Signal Name | Signal Description | Wire Size (AWG) | Wire Type | Signal Type | ICD Para. Reference |
|---|---|---|---|---|---|---|---|---|
| 1A8 | J11 | 1 | +10V.VIS.1 | +10V Visible Preamp No.1 | 26 | T(1,2) | S/C, Visible +10V Disable | 3.5.5.3 |
| 1A8 | J11 | 2 | -6V.VIS.1 | -6V Visible Preamp No.1 | 26 | T(1,2) | Internal | |
| 1A8 | J11 | 3 | +10V.VIS.2 | +10V Visible Preamp No.2 | 26 | T(3,4) | S/C, Visible +10V Disable | 3.5.5.3 |
| 1A8 | J11 | 4 | -6V.VIS.2 | -6V Visible Preamp No.2 | 26 | T(3,4) | Internal | |
| 1A8 | J11 | 5 | +10V.VIS.3 | +10V Visible Preamp No.3 | 26 | T(5,6) | S/C, Visible +10V Disable | 3.5.5.3 |
| 1A8 | J11 | 6 | -6V.VIS.3 | -6V Visible Preamp No.3 | 26 | T(5,6) | Internal | |
| 1A8 | J11 | 7 | +10V.VIS.4 | +10V Visible Preamp No.4 | 26 | T(7,8) | S/C, Visible +10V Disable | 3.5.5.3 |
| 1A8 | J11 | 8 | -6V.VIS.4 | -6V Visible Preamp No.4 | 26 | T(7,8) | Internal | |
| 1A8 | J11 | 9 | +10V.VIS.5 | +10V Visible Preamp No.5 | 26 | T(9,10) | S/C, Visible +10V Disable | 3.5.5.3 |
| 1A8 | J11 | 10 | -6V,VIS.5 | -6V Visible Preamp No.5 | 26 | T(9,10) | Internal | |
| 1A8 | J11 | 11 | +10V.VIS.6 | +10V Visible Preamp No.6 | 26 | T(11,12) | S/C, Visible +10V Disable | 3.5.5.3 |
| 1A8 | J11 | 12 | -6V.VIS.6 | -6V Visible Preamp No.6 | 26 | T(11,12) | Internal | |
| 1A8 | J11 | 13 | +10V.VIS.7 | +10V Visible Preamp No.7 | 26 | T(13,14) | S/C, Visible +10V Disable | 3.5.5.3 |
| 1A8 | J11 | 14 | -6V.VIS.7 | -6V Visible Preamp No.7 | 26 | T(13,14) | Internal | |
| 1A8 | J11 | 15 | +10V.VIS.8 | +10V Visible Preamp No.8 | 26 | T(15,16) | S/C, Visible +10V Disable | 3.5.5.3 |
| 1A8 | J11 | 16 | -6V.VIS.8 | -6V Visible Preamp No.8 | 26 | T(15,16) | Internal | |
| 1A8 | J11 | 17 | | Unused | | | Internal | |
| 1A8 | J11 | 18 | -6.2V.IR.1(1) | -6.2V1 IR Preamp Side 1 | 24 | Single | Internal | |
| 1A8 | J11 | 19 | -10V.IR2(1) | -10V2 IR Preamp Side 1 | 24 | Single | Internal | |
| 1A8 | J11 | 20 | -6.2V.IR.1(2) | -6.2V1 IR Preamp Side 2 | 24 | Single | Internal | |
| 1A8 | J11 | 21 | -10V.IR2(2) | -10V2 IR Preamp Side 2 | 24 | Single | Internal | |
| 1A8 | J11 | 22 | +15V.BIAS(1) | +15V Bias Side 1 | 24 | Single | Internal | |
| 1A8 | J11 | 23 | +15V.BIAS(2) | +15V Bias Side 2 | 24 | Single | Internal | |
| 1A8 | J11 | 24 | +10V.REF.IR(1) | +10V IR Ref Side 1 | 26 | Single | Internal | |
| 1A8 | J11 | 25 | +10V.REF.IR(2) | +10V IR Ref Side 2 | 26 | Single | Internal | |
| 1A8 | J11 | 26 | | Unused | | | Internal | |
| 1A8 | J11 | 27 | | Unused | | | Internal | |
| 1A8 | J11 | 28 | -3V.REF.1 | -3V Thermistor Ref No.1 | 24 | Single | Internal | |
| 1A8 | J11 | 29 | -3V.REF.1 | -3V Thermistor Ref No.1 | 24 | Single | Internal | |
| 1A8 | J11 | 30 | -3V.REF.2 | -3V Thermistor Ref No.2 | 24 | Single | Internal | |
| 1A8 | J11 | 31 | -3V.REF.2 | -3V Thermistor Ref No.2 | 24 | Single | Internal | |
| 1A8 | J11 | 32 | +10V.IR.1(1) | +10V.1 IR Preamp Side 1 | 24 | Single | Internal | |
| 1A8 | J11 | 33 | +10V.IR.2(1) | +10V.2 IR Preamp Side 1 | 24 | Single | Internal | |
| 1A8 | J11 | 34 | +10V.IR.1(2) | +10V.1 IR Preamp Side 2 | 24 | Single | Internal | |
| 1A8 | J11 | 35 | KEY | Key | | | Internal | |
| 1A8 | J11 | 36 | +10V.IR.2(2) | +10V.2 IR Preamp Side 2 | 24 | Single | Internal | |
| 1A8 | J11 | 37 | | Unused | | | Internal | |
| 1A8 | J11 | 38 | | Unused | | | Internal | |
| 1A8 | J11 | 39 | | Unused | | | Internal | |
| 1A8 | J11 | 40 | | Unused | | | Internal | |
| 1A8 | J11 | 41 | | Unused | | | Internal | |
| 1A8 | J11 | 42 | | Unused | | | Internal | |
| 1A8 | J11 | 43 | | Unused | | | Internal | |
| 1A8 | J11 | 44 | | Unused | | | Internal | |
| 1A8 | J11 | 45 | | Unused | | | Internal | |
| 1A8 | J11 | 46 | GROUND | Electronics Module Ground | 24 | Single | Internal | |
| 1A8 | J11 | 47 | GROUND | Electronics Module Ground | 24 | Single | Internal | |
| 1A8 | J11 | 48 | GROUND | Electronics Module Ground | 24 | Single | Internal | |
| 1A8 | J11 | 49 | KEY | Key | | | Internal | |
| 1A8 | J11 | 50 | GROUND | Electronics Module Ground | 24 | Single | Internal | |

| Module | J# | Pin# | Signal Name | Signal Description | Wire Size (AWG) | Wire Type | Signal Type | ICD Para. Reference |
|---|---|---|---|---|---|---|---|---|
| 1A8 | J12 | 1 | KEY | Key | | | Internal | |
| 1A8 | J12 | 2 | 9V.SCAN.RTN(1) | 9V Scan Return Side 1 (Not Used) | 20 | Single | Internal | |
| 1A8 | J12 | 3 | +11V.TLM(1) | +11V Telemetry Supply Side 1 (VT11PA) | 24 | Single | Internal | |
| 1A8 | J12 | 4 | | Unused | | | Internal | |
| 1A8 | J12 | 5 | +9V.SCAN(1) | +9V Scan Supply Side 1 (V9PA) | 26 | Single | Internal | |
| 1A8 | J12 | 6 | +7V.SCAN.2(1) | +7V2 Scan Supply Side 1 (V7PYA) | 20 | Single | Internal | |
| 1A8 | J12 | 7 | -8V.TLM(1) | -8V Telemetry Supply Side 1 (VT8MA) | 24 | Single | Internal | |
| 1A8 | J12 | 8 | -9V.SCAN(1) | -9V Scan Supply Side 1 (V9MA) | 26 | Single | Internal | |
| 1A8 | J12 | 9 | RESERVED | Reserved | | | Internal | |
| 1A8 | J12 | 10 | +40V.TLM(1) | +40V Telemetry Supply, Patch Heater Side 1 (VT40PA) | 26 | Single | Internal | |
| 1A8 | J12 | 11 | RESERVED | Reserved | | | Internal | |
| 1A8 | J12 | 12 | | Unused | | | Internal | |
| 1A8 | J12 | 13 | | Unused | | | Internal | |
| 1A8 | J12 | 14 | | Unused | | | Internal | |
| 1A8 | J12 | 15 | | Unused | | | Internal | |
| 1A8 | J12 | 16 | PS.SYNC(1) | Power Supply Sync Side 1 (Sync1) | 26 | TS(16,33) | Internal | |
| 1A8 | J12 | 17 | | Unused | | | Internal | |
| 1A8 | J12 | 18 | | Unused | | | Internal | |
| 1A8 | J12 | 19 | +7V.SCAN.1(1) | +7V1 Scan Supply Side 1 (V7PXA) | 20 | Single | Internal | |
| 1A8 | J12 | 20 | +17V.TLM(1) | +17V Telemetry Supply Side 1 (VT17PA) | 24 | Single | Internal | |
| 1A8 | J12 | 21 | +17V.ELE(1) | +17V Electronics Supply Side 1 (V17PA) | 20 | Single | Internal | |
| 1A8 | J12 | 22 | +8V.ELE.2(1) | +8V2 Electronics Supply Side 1 (V8PYA) | 20 | Single | Internal | |
| 1A8 | J12 | 23 | | Unused | | | Internal | |
| 1A8 | J12 | 24 | -17V.ELE(1) | -17V Electronics Supply Side 1 (V17MA) | 20 | Single | Internal | |
| 1A8 | J12 | 25 | -8V.ELE(1) | -8V Electronics Supply Side 1 (V8MA) | 20 | Single | Internal | |
| 1A8 | J12 | 26 | RESERVED | Reserved | | | Internal | |
| 1A8 | J12 | 27 | RESERVED | Reserved | | | Internal | |
| 1A8 | J12 | 28 | | Unused | | | Internal | |
| 1A8 | J12 | 29 | | Unused | | | Internal | |
| 1A8 | J12 | 30 | | Unused | | | Internal | |
| 1A8 | J12 | 31 | PWR.SPLY.TMP | Power Supply Temp (PS.THM) | 26 | Single | Internal | |
| 1A8 | J12 | 32 | | Unused | | | Internal | |
| 1A8 | J12 | 33 | PS.SYNC.RTN(1) | Power Supply Sync Return Side 1 (SyncR1) | 26 | TS(16,33) | Internal | |
| 1A8 | J12 | 34 | GROUND | Electronics Power Return (P.RTN) | 20 | Single | Internal | |
| 1A8 | J12 | 35 | +8V.ELE.1(1) | +8V1 Electronics Supply Side 1 (V8PXA) | 20 | Single | Internal | |
| 1A8 | J12 | 36 | +25V.SCAN(1) | +25V Scan Motor Side 1 (V25PA) | 26 | T(36,40) | Internal | |
| 1A8 | J12 | 37 | +12V.ELE(1) | +12V Electronics Supply Side 1 (V12PA) | 24 | Single | Internal | |
| 1A8 | J12 | 38 | +8V.ELE.3(1) | +8V3 Electronics Supply Side 1 (V8PZA) | 20 | Single | Internal | |
| 1A8 | J12 | 39 | | Unused | | | Internal | |
| 1A8 | J12 | 40 | -25V.SCAN(1) | -25V Scan Motor Side 1 (V25MA) | 26 | T(36,40) | Internal | |
| 1A8 | J12 | 41 | GROUND | Electronics Power Return (P.RTN) | 20 | Single | Internal | |
| 1A8 | J12 | 42 | | Unused | | | Internal | |
| 1A8 | J12 | 43 | | Unused | | | Internal | |
| 1A8 | J12 | 44 | | Unused | | | Internal | |
| 1A8 | J12 | 45 | | Unused | | | Internal | |
| 1A8 | J12 | 46 | GROUND | Telemetry Return From Sense Sensors (T.RTN) | 24 | Single | Internal | |
| 1A8 | J12 | 47 | -3V.REF.1 | -3V Thermistor Ref No. 1 (-3V.Ref.1) | 26 | Single | Internal | |
| 1A8 | J12 | 48 | | Unused | | | Internal | |
| 1A8 | J12 | 49 | | Unused | | | Internal | |
| 1A8 | J12 | 50 | KEY | Key | | | Internal | |

| Module | J# | Pin# | Signal Name | Signal Description | Wire Size (AWG) | Wire Type | Signal Type | ICD Para. Reference |
|---|---|---|---|---|---|---|---|---|
| 1A8 | J13 | 1 | WB.DATA(1) | Wideband Serial Data Side 1 | RG58AU | Coax(Center) | S/C, Wideband Data | 3.5.3 |
| 1A8 | J13 | 2 | WB.DATA.RT(1) | Wideband Serial Data Return Side 1 | RG58AU | Coax(Sheild) | S/C, Wideband Data | 3.5.3 |

| Module | J# | Pin# | Signal Name | Signal Description | Wire Size (AWG) | Wire Type | Signal Type | ICD Para. Reference |
|---|---|---|---|---|---|---|---|---|
| 1A8 | J14 | 1 | KEY | Key | | | | |
| 1A8 | J14 | 2 | DATA.RDY.1(1) | Proportional Command Data Ready Side 1 | 26 | Single | S/C, Proportional Command | 3.5.1.3 |
| 1A8 | J14 | 3 | DATA.RDY.1(2) | Proportional Command Data Ready Side 2 | 26 | Single | S/C, Proportional Command | 3.5.1.3 |
| 1A8 | J14 | 4 | SC.CLK.1(1) | Proportional Command Strobe Side 1 | 26 | Single | S/C, Proportional Command | 3.5.1.3 |
| 1A8 | J14 | 5 | SC.CLK.1(2) | Proportional Command Strobe Side 2 | 26 | Single | S/C, Proportional Command | 3.5.1.3 |
| 1A8 | J14 | 6 | SC.DATA.1(1) | Proportional Command Data Side 1 | 26 | Single | S/C, Proportional Command | 3.5.1.3 |
| 1A8 | J14 | 7 | SC DATA.1(2) | Proportional Command Data Side 2 | 26 | Single | S/C, Proportional Command | 3.5.1.3 |
| 1A8 | J14 | 8 | GROUND | Proportional Command Return | 26 | Single | S/C, Proportional Command | 3.5.1.3 |
| 1A8 | J14 | 9 | CAL.EN.1 | Auto B.B. Calibrate Enable | 26 | Single | S/C, Pulse Command | 3.5.1.2 |
| 1A8 | J14 | 10 | CAL.DIS.1 | Auto B.B. Calibrate Inhibit | 26 | Single | S/C, Pulse Command | 3.5.1.2 |
| 1A8 | J14 | 11 | PATCH.ON.LO.1 | Patch Temp Control ON LOW | 26 | Single | S/C, Pulse Command | 3.5.1.2 |
| 1A8 | J14 | 12 | PATCH.HI.1 | Patch Temp HIGH Select | 26 | Single | S/C, Pulse Command | 3.5.1.2 |
| 1A8 | J14 | 13 | PATCH.OFF.1 | Patch Temp Control OFF | 26 | Single | S/C, Pulse Command | 3.5.1.2 |
| 1A8 | J14 | 14 | EAST.1 | Space Look EAST | 26 | Single | S/C, Pulse Command | 3.5.1.2 |
| 1A8 | J14 | 15 | WEST.1 | Space Look WEST | 26 | Single | S/C, Pulse Command | 3.5.1.2 |
| 1A8 | J14 | 16 | SCAN.RST.1 | Scan Reset | 26 | Single | S/C, Pulse Command | 3.5.1.2 |
| 1A8 | J14 | 17 | NORM FR.ST.1 | Normal Frame Start | 26 | Single | S/C, Pulse Command | 3.5.1.2 |
| 1A8 | J14 | 18 | PRTY1.FR.ST.1 | Priority 1 Frame Start | 26 | Single | S/C, Pulse Command | 3.5.1.2 |
| 1A8 | J14 | 19 | PRTY2.FR.ST.1 | Priority 2 Frame Start | 26 | Single | S/C, Pulse Command | 3.5.1.2 |
| 1A8 | J14 | 20 | STAR.FR.ST.1 | Star Frame Start | 26 | Single | S/C, Pulse Command | 3.5.1.2 |
| 1A8 | J14 | 21 | BIAS.ON.1 | Detector Bias ON | 26 | Single | S/C, Pulse Command | 3.5.1.2 |
| 1A8 | J14 | 22 | BIAS.OFF.1 | Detector Bias OFF | 26 | Single | S/C, Pulse Command | 3.5.1.2 |
| 1A8 | J14 | 23 | 8MR.CMD.1 | IMC Range Select HIGH | 26 | Single | S/C, Pulse Command | 3.5.1.2 |
| 1A8 | J14 | 24 | 2MR.CMD.1 | IMC Range Select LOW | 26 | Single | S/C, Pulse Command | 3.5.1.2 |
| 1A8 | J14 | 25 | CEI.SEL.1 | Coherent Error Integrator ON | 26 | Single | S/C, Pulse Command | 3.5.1.2 |
| 1A8 | J14 | 26 | CMD RELAY.RTN | Command Unit 1 Return | 24 | Single | S/C, Pulse Command | 3.5.1.2 |
| 1A8 | J14 | 27 | CMD.RELAY.RTN | Command Unit 1 Return | 24 | Single | S/C, Pulse Command | 3.5.1.2 |
| 1A8 | J14 | 28 | CHASSIS.GND | Chassis Ground | 26 | Single | S/C, Wideband Data | 3.5.3 |
| 1A8 | J14 | 29 | WB.DATA.RT(1) | Wideband Coax Shield Side 1 | 16 | Single | S/C, Wideband Data | 3.5.3 |
| 1A8 | J14 | 30 | AEI.SEL.1 | Coherent Error Integrator OFF | 26 | Single | S/C, Pulse Command | 3.5.1.2 |
| 1A8 | J14 | 31 | | Unused | | | S/C | |
| 1A8 | J14 | 32 | | Unused | | | S/C | |
| 1A8 | J14 | 33 | | Unused | | | S/C | |
| 1A8 | J14 | 34 | | Unused | | | S/C | |
| 1A8 | J14 | 35 | | Unused | | | S/C | |
| 1A8 | J14 | 36 | | Unused | | | S/C | |
| 1A8 | J14 | 37 | | Unused | | | S/C | |
| 1A8 | J14 | 38 | | Unused | | | S/C | |
| 1A8 | J14 | 39 | | Unused | | | S/C | |
| 1A8 | J14 | 40 | | Unused | | | S/C | |
| 1A8 | J14 | 41 | | Unused | | | S/C | |
| 1A8 | J14 | 42 | | Unused | | | S/C | |
| 1A8 | J14 | 43 | | Unused | | | S/C | |
| 1A8 | J14 | 44 | | Unused | | | S/C | |
| 1A8 | J14 | 45 | | Unused | | | S/C | |
| 1A8 | J14 | 46 | | Unused | | | S/C | |
| 1A8 | J14 | 47 | | Unused | | | S/C | |
| 1A8 | J14 | 48 | | Unused | | | S/C | |
| 1A8 | J14 | 49 | KEY | Key | | | S/C | |
| 1A8 | J14 | 50 | | Unused | | | S/C | |

| Module | J# | Pin# | Signal Name | Signal Description | Wire Size (AWG) | Wire Type | Signal Type | ICD Para. Reference |
|---|---|---|---|---|---|---|---|---|
| 1A8 | J15 | 1 | KEY | Key | | | S/C | |
| 1A8 | J15 | 2 | AOCE.SEL(1) | IMC Unit Select Instrument Side 1 | 26 | Single | S/C, Image Motion Compensation | 3.5.4.2 |
| 1A8 | J15 | 3 | AOCE.SEL(2) | IMC Unit Select Instrument Side 2 | 26 | Single | S/C, Image Motion Compensation | 3.5.4.2 |
| 1A8 | J15 | 4 | GROUND | IMC Unit Select Return Instr Side 1 | 26 | Single | S/C, Image Motion Compensation | 3.5.4.2 |
| 1A8 | J15 | 5 | GROUND | IMC Unit Select Return Instr Side 2 | 26 | Single | S/C, Image Motion Compensation | 3.5.4.2 |
| 1A8 | J15 | 6 | EW.IMC.1 | E-W Scan Compensation INR Unit 1 | 26 | TS(6,7) | S/C, Image Motion Compensation | 3.5.4.2 |
| 1A8 | J15 | 7 | EW.IMC.RT.1 | E-W Scan Compensation Return INR Unit 1 | 26 | TS(6,7) | S/C, Image Motion Compensation | 3.5.4.2 |
| 1A8 | J15 | 8 | EW.IMC.2 | E-W Scan Compensation INR Unit 2 | 26 | TS(8,9) | S/C, Image Motion Compensation | 3.5.4.2 |
| 1A8 | J15 | 9 | EW.IMC.RT.2 | E-W Scan Compensation Return INR Unit 2 | 26 | TS(8,9) | S/C, Image Motion Compensation | 3.5.4.2 |
| 1A8 | J15 | 10 | NS.IMC.1 | N-S Scan Compensation INR Unit 1 | 26 | TS(10,11) | S/C, Image Motion Compensation | 3.5.4.2 |
| 1A8 | J15 | 11 | NS.IMC.RT.1 | N-S Scan Compensation Return INR Unit 1 | 26 | TS(10,11) | S/C, Image Motion Compensation | 3.5.4.2 |
| 1A8 | J15 | 12 | NS IMC 2 | N-S Scan Compensation INR Unit 2 | 26 | TS(12,13) | S/C, Image Motion Compensation | 3.5.4.2 |
| 1A8 | J15 | 13 | NS IMC RT.2 | N-S Scan Compensation Return INR Unit 2 | 26 | TS(12,13) | S/C, Image Motion Compensation | 3.5.4.2 |
| 1A8 | J15 | 14 | EW.DIRECT(1) | E-W Direction Instrument Side 1 | 26 | Single | S/C, Scan Status | 3.5.4.4 |
| 1A8 | J15 | 15 | EW.DIRECT(2) | E-W Direction Instrument Side 2 | 26 | Single | S/C, Scan Status | 3.5.4.4 |
| 1A8 | J15 | 16 | EW.SLEW(1) | E-W Scan/No Scan Instrument Side 1 | 26 | Single | S/C, Scan Status | 3.5.4.4 |
| 1A8 | J15 | 17 | EW.SLEW(2) | E-W Scan/No Scan Instrument Side 2 | 26 | Single | S/C, Scan Status | 3.5.4.4 |
| 1A8 | J15 | 18 | NS.DIRECT(1) | N-S Direction Instrument Side 1 | 26 | Single | S/C, Scan Status | 3.5.4.4 |
| 1A8 | J15 | 19 | NS.DIRECT(2) | N-S Direction Instrument Side 2 | 26 | Single | S/C, Scan Status | 3.5.4.4 |
| 1A8 | J15 | 20 | NS.SLEW(1) | N-S Scan/No Scan Instrument Side 1 | 26 | Single | S/C, Scan Status | 3.5.4.4 |
| 1A8 | J15 | 21 | NS.SLEW(2) | N-S Scan/No Scan Instrument Side 2 | 26 | Single | S/C, Scan Status | 3.5.4.4 |
| 1A8 | J15 | 22 | AOCE.REQ.1(1) | Mirror Position Request Flag INR 1 Instr 1 | 26 | Single | S/C, Mirror Position | 3.5.4.3 |
| 1A8 | J15 | 23 | AOCE.REQ.1(2) | Mirror Position Request Flag INR 1 Instr 2 | 26 | Single | S/C, Mirror Position | 3.5.4.3 |
| 1A8 | J15 | 24 | AOCE.REQ.2(1) | Mirror Position Request Flag INR 2 Instr 1 | 26 | Single | S/C, Mirror Position | 3.5.4.3 |
| 1A8 | J15 | 25 | AOCE.REQ.2(2) | Mirror Position Request Flag INR 2 Instr 2 | 26 | Single | S/C, Mirror Position | 3.5.4.3 |
| 1A8 | J15 | 26 | AOCE.STB.1(1) | Mirror Position Request Strobe INR 1 Instr 1 | 26 | Single | S/C, Mirror Position | 3.5.4.3 |
| 1A8 | J15 | 27 | AOCE.STB.1(2) | Mirror Position Request Strobe INR 1 Instr 2 | 26 | Single | S/C, Mirror Position | 3.5.4.3 |
| 1A8 | J15 | 28 | AOCE.STE.2(1) | Mirror Position Request Strobe INR 2 Instr 1 | 26 | Single | S/C, Mirror Position | 3.5.4.3 |
| 1A8 | J15 | 29 | AOCE.STB.2(2) | Mirror Position Request Strobe INR 2 Instr 2 | 26 | Single | S/C, Mirror Position | 3.5.4.3 |
| 1A8 | J15 | 30 | AOCE.ADDR.1 | Mirror Position Data INR Side 1 | 26 | Single | S/C, Mirror Position | 3.5.4.3 |
| 1A8 | J15 | 31 | AOCE.ADDR.2 | Mirror Position Data INR Side 2 | 26 | Single | S/C, Mirror Position | 3.5.4.3 |
| 1A8 | J15 | 32 | FRAME.*(1) | Frame/No Frame INR Side 1 | 26 | Single | S/C, Scan Status | 3.5.4.4 |
| 1A8 | J15 | 33 | KEY | Key | | | S/C | |
| 1A8 | J15 | 34 | FRAME.*(2) | Frame/No Frame INR Side 2 | 26 | Single | S/C, Scan Status | 3.5.4.4 |
| 1A8 | J15 | 35 | STAR.*(1) | Star/No Star INR Side 1 | 26 | Single | S/C, Scan Status | 3.5.4.4 |
| 1A8 | J15 | 36 | STAR.*(2) | Star/No Star INR Side 2 | 26 | Single | S/C, Scan Status | 3.5.4.4 |
| 1A8 | J15 | 37 | AOCE.DATA.1(1) | Spacecraft Attitude Data INR 1 Instr 1 | 26 | Single | S/C, Attitude Data | 3.5.4.1 |
| 1A8 | J15 | 38 | AOCE.DATA.1(2) | Spacecraft Attitude Data INR 1 Instr 2 | 26 | Single | S/C, Attitude Data | 3.5.4.1 |
| 1A8 | J15 | 39 | AOCE.DATA.2(1) | Spacecraft Attitude Data INR 2 Instr 1 | 26 | Single | S/C, Attitude Data | 3.5.4.1 |
| 1A8 | J15 | 40 | AOCE.DATA.2(2) | Spacecraft Attitude Data INR 2 Instr 2 | 26 | Single | S/C, Attitude Data | 3.5.4.1 |
| 1A8 | J15 | 41 | AOCE.CLK.1(1) | Spacecraft Attitude Clock INR 1 Instr 1 | 26 | Single | S/C, Attitude Data | 3.5.4.1 |
| 1A8 | J15 | 42 | AOCE.CLK.1(2) | Spacecraft Attitude Clock INR 1 Instr 2 | 26 | Single | S/C, Attitude Data | 3.5.4.1 |
| 1A8 | J15 | 43 | AOCE.CLK.2(1) | Spacecraft Attitude Clock INR 2 Instr 1 | 26 | Single | S/C, Attitude Data | 3.5.4.1 |
| 1A8 | J15 | 44 | AOCE.CLK.2(2) | Spacecraft Attitude Clock INR 2 Instr 2 | 26 | Single | S/C, Attitude Data | 3.5.4.1 |
| 1A8 | J15 | 45 | TMNG.GATE.1(1) | Spacecraft Attitude Timing Gate INR 1 Instr1 | 26 | Single | S/C, Attitude Data | 3.5.4.1 |
| 1A8 | J15 | 46 | TMNG.GATE.1(2) | Spacecraft Attitude Timing Gate INR 1 Instr2 | 26 | Single | S/C, Attitude Data | 3.5.4.1 |
| 1A8 | J15 | 47 | TMNG.GATE.2(1) | Spacecraft Attitude Timing Gate INR 2 Instr1 | 26 | Single | S/C, Attitude Data | 3.5.4.1 |
| 1A8 | J15 | 48 | TMNG.GATE.2(2) | Spacecraft Attitude Timing Gate INR 2 Instr2 | 26 | Single | S/C, Attitude Data | 3.5.4.1 |
| 1A8 | J15 | 49 | GROUND | INR Unit 1 Return | 26 | Single | S/C, Attitude Data | 3.5.4.1 |
| 1A8 | J15 | 50 | GROUND | INR Unit 2 Return | 26 | Single | S/C, Attitude Data | 3.5.4.1 |

| Module | J# | Pin# | Signal Name | Signal Description | Wire Size (AWG) | Wire Type | Signal Type | ICD Para. Reference |
|---|---|---|---|---|---|---|---|---|
| 1A8 | J16 | 1 | SCN.CUR.Y.T(1) | N-S Motor Current Telemetry Side 1 | 26 | TS(1,18) | Internal | |
| 1A8 | J16 | 2 | KEY | Key | | | Internal | |
| 1A8 | J16 | 3 | EW.X1.PO(2) | E-W X1 Preamp Output Side 2 | 26 | TS(3,4,20) | Internal | |
| 1A8 | J16 | 4 | EW.X1.PO.R(2) | E-W X1 Preamp Output Return Side 2 | 26 | TS(3 4,20) | Internal | |
| 1A8 | J16 | 5 | EW.X1.PO(1) | E-W X1 Preamp Output Side 1 | 26 | TS(5,6,22) | Internal | |
| 1A8 | J16 | 6 | EW.X1.PO.R(1) | E-W X1 Preamp Output Return Side 1 | 26 | TS(5,6,22) | Internal | |
| 1A8 | J16 | 7 | SCN.CUR.X.T(1) | E-W Motor Current Telemetry Side 1 | 26 | TS(7,8) | Internal | |
| 1A8 | J16 | 8 | SNCUR.X.T.R(1) | E-W Motor Current Telemetry Return Side 1 | 26 | TS(7,8) | Internal | |
| 1A8 | J16 | 9 | SCN.CUR.X.T(2) | E-W Motor Current Telemetry Side 2 | 26 | TS(9,10) | Internal | |
| 1A8 | J16 | 10 | SNCUR.X.T.R(2) | E-W Motor Current Telemetry Return Side 2 | 26 | TS(9,10) | Internal | |
| 1A8 | J16 | 11 | MOL(1) | Motor Overload Side 1 | 26 | Single | S/C, Motor Overload | 3.5.5.2 |
| 1A8 | J16 | 12 | EW.X128PO.R(2) | E-W X128 Preamp Output Return Side 2 | 26 | TS(12,13,29) | Internal | |
| 1A8 | J16 | 13 | EW.X128PO(2) | E-W X128 Preamp Output Side 2 | 26 | TS(12,13,29) | Internal | |
| 1A8 | J16 | 14 | EW.X128PO.R(1) | E-W X128 Preamp Output Return Side 1 | 26 | TS(14,15,31) | Internal | |
| 1A8 | J16 | 15 | EW.X128PO(1) | E-W X128 Preamp Output Side 1 | 26 | TS(14,15,31) | Internal | |
| 1A8 | J16 | 16 | | Unused | | | Internal | |
| 1A8 | J16 | 17 | SCN.CUR.Y.T(2) | N-S Motor Current Telemetry Side 2 | 26 | TS(17,33) | Internal | |
| 1A8 | J16 | 18 | SNCUR.Y.T.R(1) | N-S Motor Current Telemetry Return Side 1 | 26 | TS(1,18) | Internal | |
| 1A8 | J16 | 19 | | Unused | | | Internal | |
| 1A8 | J16 | 20 | EW.X1.PO.SH(2) | E-W X1 Preamp Output Shield Side 2 | 26 | TS(3,4,20) | Internal | |
| 1A8 | J16 | 21 | NS.X1.PO.SH(2) | N-S X1 Preamp Output Shield Side 2 | 26 | TS(21,37,38) | Internal | |
| 1A8 | J16 | 22 | EW.X1.PO.SH(1) | E-W X1 Preamp Output Shield Side 1 | 26 | TS(5,6,22) | Internal | |
| 1A8 | J16 | 23 | NS.X1.PO.SH(1) | N-S X1 Preamp Output Shield Side 1 | 26 | TS(23,39,40) | Internal | |
| 1A8 | J16 | 24 | | Unused | | | Internal | |
| 1A8 | J16 | 25 | SCAN.V.ON(1) | Scan Voltage ON Side 1 | 26 | Single | Internal | |
| 1A8 | J16 | 26 | | Unused | | | Internal | |
| 1A8 | J16 | 27 | MOL(2) | Motor Overload Side 2 | 26 | Single | S/C, Motor Overload | 3.5.5.2 |
| 1A8 | J16 | 28 | NSX128PO.SH(2) | N-S X128 Preamp Output Shield Side 2 | 26 | TS(28,44,45) | Internal | |
| 1A8 | J16 | 29 | EWX128PO.SH(2) | E-W X128 Preamp Output Shield Side 2 | 26 | TS(12,13,29) | Internal | |
| 1A8 | J16 | 30 | NSX128PO.SH(1) | N-S X128 Preamp Output Shield Side 1 | 26 | TS(30,46,47) | Internal | |
| 1A8 | J16 | 31 | EWX128PO.SH(1) | E-W X128 Preamp Output Shield Side 1 | 26 | TS(14,15,31) | Internal | |
| 1A8 | J16 | 32 | | Unused | | | Internal | |
| 1A8 | J16 | 33 | SNCUR.Y.T.R(2) | N-S Motor Current Telemetry Return Side 2 | 26 | TS(17,33) | Internal | |
| 1A8 | J16 | 34 | | Unused | | | Internal | |
| 1A8 | J16 | 35 | | Unused | | | Internal | |
| 1A8 | J16 | 36 | | Unused | | | Internal | |
| 1A8 | J16 | 37 | NS.X1.PO(2) | N-S X1 Preamp Output Side 2 | 26 | TS(21,37,38) | Internal | |
| 1A8 | J16 | 38 | NS.X1.PO.R(2) | N-S X1 Preamp Output Return Side 2 | 26 | TS(21,37,38) | Internal | |
| 1A8 | J16 | 39 | NS.X1.PO(1) | N-S X1 Preamp Output Side 1 | 26 | TS(23,39,40) | Internal | |
| 1A8 | J16 | 40 | NS.X1.PO.R(1) | N-S X1 Preamp Output Return Side 1 | 26 | TS(23,39,40) | Internal | |
| 1A8 | J16 | 41 | SCAN.V.ON(2) | Scan Voltage ON Side 2 | 26 | Single | Internal | |
| 1A8 | J16 | 42 | SCAN.N.UP(2) | Scan Not Up Side 2 | 26 | Single | Internal | |
| 1A8 | J16 | 43 | SCAN.N.UP(1) | Scan Not Up Side 1 | 26 | Single | Internal | |
| 1A8 | J16 | 44 | NS.X128PO(2) | N-S X128 Preamp Output Side 2 | 26 | TS(28,44,45) | Internal | |
| 1A8 | J16 | 45 | NS.X128PO.R(2) | N-S X128 Preamp Output Return Side 2 | 26 | TS(28,44,45) | Internal | |
| 1A8 | J16 | 46 | NS.X128PO(1) | N-S X128 Preamp Output Side 1 | 26 | TS(30,46,47) | Internal | |
| 1A8 | J16 | 47 | NS.X128PO.R(1) | N-S X128 Preamp Output Return Side 1 | 26 | TS(30,46,47) | Internal | |
| 1A8 | J16 | 48 | | Unused | | | Internal | |
| 1A8 | J16 | 49 | | Unused | | | Internal | |
| 1A8 | J16 | 50 | KEY | Key | | | Internal | |

| Module | J# | Pin# | Signal Name | Signal Description | Wire Size (AWG) | Wire Type | Signal Type | ICD Para. Reference |
|---|---|---|---|---|---|---|---|---|
| 1A8 | J17 | 1 | EW.IMC.S.TP(1) | E-W IMC Select Test Side 1 | 26 | Single | Internal, Servo (Scan Comp) | 3.4.1.4 |
| 1A8 | J17 | 2 | KEY | Key | | | Internal | |
| 1A8 | J17 | 3 | EW.IMC.S.TP(2) | E-W IMC Select Test Side 2 | 26 | Single | Internal, Servo (Scan Comp) | 3.4.1.4 |
| 1A8 | J17 | 4 | EW.FPCMP.TP(1) | E-W Fixed Pattern Compensation Test Side 1 | 26 | Single | Internal, Servo (Scan Comp) | 3.4.1.4 |
| 1A8 | J17 | 5 | EW.FPCMP.TP(2) | E-W Fixed Pattern Compensation Test Side 2 | 26 | Single | Internal, Servo (Scan Comp) | 3.4.1.4 |
| 1A8 | J17 | 6 | ORTHOG.TP(1) | Orthoganality Test Side 1 | 26 | Single | Internal, Servo (Scan Comp) | 3.4.1.4 |
| 1A8 | J17 | 7 | ORTHOG.TP(2) | Orthoganality Test Side 2 | 26 | Single | Internal, Servo (Scan Comp) | 3.4.1.4 |
| 1A8 | J17 | 8 | EW.DACO.TP(1) | E-W DAC Output Test Side 1 | 26 | Single | Internal, Servo (Scan Comp) | 3.4.1.4 |
| 1A8 | J17 | 9 | EW.DACO.TP(2) | E-W DAC Output Test Side 2 | 26 | Single | Internal, Servo (Scan Comp) | 3.4.1.4 |
| 1A8 | J17 | 10 | NS.IMC.S.TP(1) | N-S IMC Select Test Side 1 | 26 | Single | Internal, Servo (Scan Comp) | 3.4.1.4 |
| 1A8 | J17 | 11 | NS.IMC.S.TP(2) | N-S IMC Select Test Side 2 | 26 | Single | Internal, Servo (Scan Comp) | 3.4.1.4 |
| 1A8 | J17 | 12 | NS.FPCMP.TP(1) | N-S Fixed Pattern Compensation Test Side 1 | 26 | Single | Internal, Servo (Scan Comp) | 3.4.1.4 |
| 1A8 | J17 | 13 | NS.FPCMP.TP(2) | N-S Fixed Pattern Compensation Test Side 2 | 26 | Single | Internal, Servo (Scan Comp) | 3.4.1.4 |
| 1A8 | J17 | 14 | NS.DACO.TP(1) | N-S DAC Output Test Side 1 | 26 | Single | Internal, Servo (Scan Comp) | 3.4.1.4 |
| 1A8 | J17 | 15 | NS.DACO.TP(2) | N-S DAC Output Test Side 2 | 26 | Single | Internal, Servo (Scan Comp) | 3.4.1.4 |
| 1A8 | J17 | 16 | EW.CACL.TP(1) | E-W Compensated Address Clock Test Side 1 | 26 | Single | Internal, Servo Clocks | 3.4.1.4 |
| 1A8 | J17 | 17 | EW.CACL.TP(2) | E-W Compensated Address Clock Test Side 2 | 26 | Single | Internal, Servo Clocks | 3.4.1.4 |
| 1A8 | J17 | 18 | NS.CACL.TP(1) | N-S Compensated Address Clock Test Side 1 | 26 | Single | Internal, Servo Clocks | 3.4.1.4 |
| 1A8 | J17 | 19 | NS.CACL.TP(2) | N-S Compensated Address Clock Test Side 2 | 26 | Single | Internal, Servo Clocks | 3.4.1.4 |
| 1A8 | J17 | 20 | T.NS.CLK(1) | N-S Clock Test Side 1 | 26 | Single | Internal, Servo Clocks | 3.4.1.4 |
| 1A8 | J17 | 21 | T.NS.CLK(2) | N-S Clock Test Side 2 | 26 | Single | Internal, Servo Clocks | 3.4.1.4 |
| 1A8 | J17 | 22 | T.EW.CLK(1) | E-W Clock Test Side 1 | 26 | Single | Internal, Servo Clocks | 3.4.1.4 |
| 1A8 | J17 | 23 | T.EW.CLK(2) | E-W Clock Test Side 2 | 26 | Single | Internal, Servo Clocks | 3.4.1.4 |
| 1A8 | J17 | 24 | EW.TEST.IN(1) | E-W Test Side 1 | 26 | TS(24,25) | Internal, Servo (For Bode Plots) | 3.4.1.4 |
| 1A8 | J17 | 25 | EW.TEST.RT(1) | E-W Test Return Side 1 | 26 | TS(24,25) | Internal, Servo (For Bode Plots) | 3.4.1.4 |
| 1A8 | J17 | 26 | EW.TEST.IN(2) | E-W Test Side 2 | 26 | TS(26,27) | Internal, Servo (For Bode Plots) | 3.4.1.4 |
| 1A8 | J17 | 27 | EW.TEST.RT(2) | E-W Test Return Side 2 | 26 | TS(26,27) | Internal, Servo (For Bode Plots) | 3.4.1.4 |
| 1A8 | J17 | 28 | EW.TEST1(1) | E-W Test 1 Side 1 | 26 | TS(28,29) | Internal, Servo (For Bode Plots) | 3.4.1.4 |
| 1A8 | J17 | 29 | EW.TEST1.RT(1) | E-W Test 1 Return Side 1 | 26 | TS(28 29) | Internal, Servo (For Bode Plots) | 3.4.1.4 |
| 1A8 | J17 | 30 | EW.TEST1(2) | E-W Test 1 Side 2 | 26 | TS(30,31) | Internal, Servo (For Bode Plots) | 3.4.1.4 |
| 1A8 | J17 | 31 | EW.TEST1.RT(2) | E-W Test 1 Return Side 2 | 26 | TS(30,31) | Internal, Servo (For Bode Plots) | 3.4.1.4 |
| 1A8 | J17 | 32 | KEY | Key | | | Internal | |
| 1A8 | J17 | 33 | GROUND | Electronics Module Ground | 26 | Single | Internal, Servo | 3.4.1.4 |
| 1A8 | J17 | 34 | EW.TEST2(1) | E-W Test 2 Side 1 | 26 | TS(34,35) | Internal, Servo (For Bode Plots) | 3.4.1.4 |
| 1A8 | J17 | 35 | EW.TEST2.RT(1) | E-W Test 2 Return Side 1 | 26 | TS(34,35) | Internal, Servo (For Bode Plots) | 3.4.1.4 |
| 1A8 | J17 | 36 | EW.TEST2(2) | E-W Test 2 Side 2 | 26 | TS(36 37) | Internal, Servo (For Bode Plots) | 3.4.1.4 |
| 1A8 | J17 | 37 | EW.TEST2.RT(2) | E-W Test 2 Return Side 2 | 26 | TS(36 37) | Internal, Servo (For Bode Plots) | 3.4.1.4 |
| 1A8 | J17 | 38 | NS.TEST.IN(1) | N-S Test Side 1 | 26 | TS(38,39) | Internal, Servo (For Bode Plots) | 3.4.1.4 |
| 1A8 | J17 | 39 | NS.TEST.RT(1) | N-S Test Return Side 1 | 26 | TS(38,39) | Internal, Servo (For Bode Plots) | 3.4.1.4 |
| 1A8 | J17 | 40 | NS.TEST.IN(2) | N-S Test Side 2 | 26 | TS(40,41) | Internal, Servo (For Bode Plots) | 3.4.1.4 |
| 1A8 | J17 | 41 | NS.TEST.RT(2) | N-S Test Return Side 2 | 26 | TS(40,41) | Internal, Servo (For Bode Plots) | 3.4.1.4 |
| 1A8 | J17 | 42 | NS.TEST1(1) | N-S Test 1 Side 1 | 26 | TS(42,43) | Internal, Servo (For Bode Plots) | 3.4.1.4 |
| 1A8 | J17 | 43 | NS.TEST1.RT(1) | N-S Test 1 Return Side 1 | 26 | TS(42,43) | Internal, Servo (For Bode Plots) | 3.4.1.4 |
| 1A8 | J17 | 44 | NS.TEST1(2) | N-S Test 1 Side 2 | 26 | TS(44,45) | Internal, Servo (For Bode Plots) | 3.4.1.4 |
| 1A8 | J17 | 45 | NS.TEST1.RT(2) | N-S Test 1 Return Side 2 | 26 | TS(44,45) | Internal, Servo (For Bode Plots) | 3.4.1.4 |
| 1A8 | J17 | 46 | NS.TEST2(1) | N-S Test 2 Side 1 | 26 | TS(46,47) | Internal, Servo (For Bode Plots) | 3.4.1.4 |
| 1A8 | J17 | 47 | NS.TEST2.RT(1) | N-S Test 2 Return Side 1 | 26 | TS(46,47) | Internal, Servo (For Bode Plots) | 3.4.1.4 |
| 1A8 | J17 | 48 | NS.TEST2(2) | N-S Test 2 Side 2 | 26 | TS(48,49) | Internal, Servo (For Bode Plots) | 3.4.1.4 |
| 1A8 | J17 | 49 | NS.TEST2.RT(2) | N-S Test 2 Return Side 2 | 26 | TS(48,49) | Internal, Servo (For Bode Plots) | 3.4.1.4 |
| 1A8 | J17 | 50 | GROUND | Electronics Module Ground | 26 | Single | Internal, Servo | 3.4.1.4 |

| Module | J# | Pin# | Signal Name | Signal Description | Wire Size (AWG) | Wire Type | Signal Type | ICD Para. Reference |
|---|---|---|---|---|---|---|---|---|
| 1A8 | J18 | 1 | TP.VIS1.PRE | VIS Ch.1 Det.1 Pre LPF Testpoint | 26 | SSC | Internal, Video (Visible) | 3.4.1.4 |
| 1A8 | J18 | 2 | TP.VIS1.ADC | VIS Ch.1 Det.1 A/D Input Testpoint | 26 | SSC | Internal, Video (Visible) | 3.4.1.4 |
| 1A8 | J18 | 3 | TP.VIS2.PRE | VIS Ch.1 Det.2 Pre LPF Testpoint | 26 | SSC | Internal, Video (Visible) | 3.4.1.4 |
| 1A8 | J18 | 4 | TP.VIS2.ADC | VIS Ch.1 Det.2 A/D Input Testpoint | 26 | SSC | Internal, Video (Visible) | 3.4.1.4 |
| 1A8 | J18 | 5 | TP.VIS3.PRE | VIS Ch.1 Det.3 Pre LPF Testpoint | 26 | SSC | Internal, Video (Visible) | 3.4.1.4 |
| 1A8 | J18 | 6 | TP.VIS3.ADC | VIS Ch.1 Det.3 A/D Input Testpoint | 26 | SSC | Internal, Video (Visible) | 3.4.1.4 |
| 1A8 | J18 | 7 | TP.VIS4.PRE | VIS Ch.1 Det.4 Pre LPF Testpoint | 26 | SSC | Internal, Video (Visible) | 3.4.1.4 |
| 1A8 | J18 | 8 | TP.VIS4.ADC | VIS Ch.1 Det.4 A/D Input Testpoint | 26 | SSC | Internal, Video (Visible) | 3.4.1.4 |
| 1A8 | J18 | 9 | TP.VIS5.PRE | VIS Ch.1 Det.5 Pre LPF Testpoint | 26 | SSC | Internal, Video (Visible) | 3.4.1.4 |
| 1A8 | J18 | 10 | TP.VIS5.ADC | VIS Ch.1 Det.5 A/D Input Testpoint | 26 | SSC | Internal, Video (Visible) | 3.4.1.4 |
| 1A8 | J18 | 11 | TP.VIS6.PRE | VIS Ch.1 Det.6 Pre LPF Testpoint | 26 | SSC | Internal, Video (Visible) | 3.4.1.4 |
| 1A8 | J18 | 12 | TP.VIS6.ADC | VIS Ch.1 Det.6 A/D Input Testpoint | 26 | SSC | Internal, Video (Visible) | 3.4.1.4 |
| 1A8 | J18 | 13 | TP.VIS7.PRE | VIS Ch.1 Det.7 Pre LPF Testpoint | 26 | SSC | Internal, Video (Visible) | 3.4.1.4 |
| 1A8 | J18 | 14 | TP.VIS7.ADC | VIS Ch.1 Det.7 A/D Input Testpoint | 26 | SSC | Internal, Video (Visible) | 3.4.1.4 |
| 1A8 | J18 | 15 | TP.VIS8.PRE | VIS Ch.1 Det.8 Pre LPF Testpoint | 26 | SSC | Internal, Video (Visible) | 3.4.1.4 |
| 1A8 | J18 | 16 | TP.VIS8.ADC | VIS Ch.1 Det.8 A/D Input Testpoint | 26 | SSC | Internal, Video (Visible) | 3.4.1.4 |
| 1A8 | J18 | 17 | TP.2A.PRE(1) | IR Ch.2 Det.A Pre LPF Testpoint Side 1 | 26 | SSC | Internal, Video (IR) | 3.4.1.4 |
| 1A8 | J18 | 18 | TP.2A.PRE(2) | IR Ch.2 Det.A Pre LPF Testpoint Side 2 | 26 | SSC | Internal, Video (IR) | 3.4.1.4 |
| 1A8 | J18 | 19 | TP.2A.ADC(1) | IR Ch.2 Det.A A/D Input Testpoint Side 1 | 26 | SSC | Internal, Video (IR) | 3.4.1.4 |
| 1A8 | J18 | 20 | TP.2A.ADC(2) | IR Ch.2 Det.A A/D Input Testpoint Side 2 | 26 | SSC | Internal, Video (IR) | 3.4.1.4 |
| 1A8 | J18 | 21 | TP.2B.PRE(1) | IR Ch.2 Det.B Pre LPF Testpoint Side 1 | 26 | SSC | Internal, Video (IR) | 3.4.1.4 |
| 1A8 | J18 | 22 | TP.2B.PRE(2) | IR Ch.2 Det.B Pre LPF Testpoint Side 2 | 26 | SSC | Internal, Video (IR) | 3.4.1.4 |
| 1A8 | J18 | 23 | TP.2B.ADC(1) | IR Ch.2 Det.B A/D Input Testpoint Side 1 | 26 | SSC | Internal, Video (IR) | 3.4.1.4 |
| 1A8 | J18 | 24 | TP.2B.ADC(2) | IR Ch.2 Det.B A/D Input Testpoint Side 2 | 26 | SSC | Internal, Video (IR) | 3.4.1.4 |
| 1A8 | J18 | 25 | TP.3A.PRE(1) | IR Ch.3 Det.A Pre LPF Testpoint Side 1 | 26 | SSC | Internal, Video (IR) | 3.4.1.4 |
| 1A8 | J18 | 26 | TP.3A.PRE(2) | IR Ch.3 Det.A Pre LPF Testpoint Side 2 | 26 | SSC | Internal, Video (IR) | 3.4.1.4 |
| 1A8 | J18 | 27 | TP.3A.ADC(1) | IR Ch.3 Det.A A/D Input Testpoint Side 1 | 26 | SSC | Internal, Video (IR) | 3.4.1.4 |
| 1A8 | J18 | 28 | TP.3A.ADC(2) | IR Ch.3 Det.A A/D Input Testpoint Side 2 | 26 | SSC | Internal, Video (IR) | 3.4.1.4 |
| 1A8 | J18 | 29 | TP.4A.PRE(1) | IR Ch.4 Det.A Pre LPF Testpoint Side 1 | 26 | SSC | Internal, Video (IR) | 3.4.1.4 |
| 1A8 | J18 | 30 | TP.4A.PRE(2) | IR Ch.4 Det.A Pre LPF Testpoint Side 2 | 26 | SSC | Internal, Video (IR) | 3.4.1.4 |
| 1A8 | J18 | 31 | TP.4A.ADC(1) | IR Ch.4 Det.A A/D Input Testpoint Side 1 | 26 | SSC | Internal, Video (IR) | 3.4.1.4 |
| 1A8 | J18 | 32 | TP.4A.ADC(2) | IR Ch.4 Det.A A/D Input Testpoint Side 2 | 26 | SSC | Internal, Video (IR) | 3.4.1.4 |
| 1A8 | J18 | 33 | TP.4B.PRE(1) | IR Ch.4 Det.B Pre LPF Testpoint Side 1 | 26 | SSC | Internal, Video (IR) | 3.4.1.4 |
| 1A8 | J18 | 34 | KEY | Key | | | Internal | |
| 1A8 | J18 | 35 | TP.4B.PRE(2) | IR Ch.4 Det.B Pre LPF Testpoint Side 2 | 26 | SSC | Internal, Video (IR) | 3.4.1.4 |
| 1A8 | J18 | 36 | TP.4B.ADC(1) | IR Ch.4 Det.B A/D Input Testpoint Side 1 | 26 | SSC | Internal, Video (IR) | 3.4.1.4 |
| 1A8 | J18 | 37 | TP.4B.ADC(2) | IR Ch.4 Det.B A/D Input Testpoint Side 2 | 26 | SSC | Internal, Video (IR) | 3.4.1.4 |
| 1A8 | J18 | 38 | TP.5A.PRE(1) | IR Ch.5 Det.A Pre LPF Testpoint Side 1 | 26 | SSC | Internal, Video (IR) | 3.4.1.4 |
| 1A8 | J18 | 39 | TP.5A.PRE(2) | IR Ch.5 Det.A Pre LPF Testpoint Side 2 | 26 | SSC | Internal, Video (IR) | 3.4.1.4 |
| 1A8 | J18 | 40 | TP.5A.ADC(1) | IR Ch.5 Det.A A/D Input Testpoint Side 1 | 26 | SSC | Internal, Video (IR) | 3.4.1.4 |
| 1A8 | J18 | 41 | TP.5A.ADC(2) | IR Ch.5 Det.A A/D Input Testpoint Side 2 | 26 | SSC | Internal, Video (IR) | 3.4.1.4 |
| 1A8 | J18 | 42 | TP.5B.PRE(1) | IR Ch.5 Det.B Pre LPF Testpoint Side 1 | 26 | SSC | Internal, Video (IR) | 3.4.1.4 |
| 1A8 | J18 | 43 | TP.5B.PRE(2) | IR Ch.5 Det.B Pre LPF Testpoint Side 2 | 26 | SSC | Internal, Video (IR) | 3.4.1.4 |
| 1A8 | J18 | 44 | TP.5B.ADC(1) | IR Ch.5 Det.B A/D Input Testpoint Side 1 | 26 | SSC | Internal, Video (IR) | 3.4.1.4 |
| 1A8 | J18 | 45 | TP.5B.ADC(2) | IR Ch.5 Det.B A/D Input Testpoint Side 2 | 26 | SSC | Internal, Video (IR) | 3.4.1.4 |
| 1A8 | J18 | 46 | GROUND | Electronics Module Ground | 26 | Single | Internal, Video | 3.4.1.4 |
| 1A8 | J18 | 47 | GROUND | Electronics Module Ground | 26 | Single | Internal, Video | 3.4.1.4 |
| 1A8 | J18 | 48 | GROUND | Electronics Module Ground | 26 | Single | Internal, Video | 3.4.1.4 |
| 1A8 | J18 | 49 | KEY | Key | | | Internal | |
| 1A8 | J18 | 50 | GROUND | Electronics Module Ground | 26 | Single | Internal, Scan Control Status | 3.4.1.4 |

| Module | J# | Pin# | Signal Name | Signal Description | Wire Size (AWG) | Wire Type | Signal Type | ICD Para. Reference |
|---|---|---|---|---|---|---|---|---|
| 1A8 | J19 | 1 | DATA(1) | Wideband Data Only Test Side 1 | 26 | Single | Internal, Scan Control Status | 3.4.1.4 |
| 1A8 | J19 | 2 | DATA(2) | Wideband Data Only Test Side 2 | 26 | Single | Internal, Scan Control Status | 3.4.1.4 |
| 1A8 | J19 | 3 | PN.CODE(1) | PN Code Only Test Side 1 | 26 | Single | Internal, Scan Control Status | 3.4.1.4 |
| 1A8 | J19 | 4 | PN.CODE(2) | PN Code Only Test Side 2 | 26 | Single | Internal, Scan Control Status | 3.4.1.4 |
| 1A8 | J19 | 5 | 2.6208MHZTP(1) | Bit Clock Only Test Side 1 | 26 | Single | Internal, Scan Control Status | 3.4.1.4 |
| 1A8 | J19 | 6 | 2.6208MHZTP(2) | Bit Clock Only Test Side 2 | 26 | Single | Internal, Scan Control Status | 3.4.1.4 |
| 1A8 | J19 | 7 | T.EOL(1) | End of Line Test Side 1 | 26 | Single | Internal, Scan Control Status | 3.4.1.4 |
| 1A8 | J19 | 8 | T.EOL(2) | End of Line Test Side 2 | 26 | Single | Internal, Scan Control Status | 3.4.1.4 |
| 1A8 | J19 | 9 | T.SOL(1) | Start of Line Test Side 1 | 26 | Single | Internal, Scan Control Status | 3.4.1.4 |
| 1A8 | J19 | 10 | T.SOL(2) | Start of Line Test Side 2 | 26 | Single | Internal, Scan Control Status | 3.4.1.4 |
| 1A8 | J19 | 11 | GROUND | Ground | 26 | Single | Internal, Scan Control Status | 3.4.1.4 |
| 1A8 | J19 | 12 | GROUND | Ground | 26 | Single | Internal, Scan Control Status | 3.4.1.4 |
| 1A8 | J19 | 13 | | Unused | | | Internal | |
| 1A8 | J19 | 14 | | Unused | | | Internal | |
| 1A8 | J19 | 15 | | Unused | | | Internal | |
| 1A8 | J19 | 16 | | Unused | | | Internal | |
| 1A8 | J19 | 17 | | Unused | | | Internal | |
| 1A8 | J19 | 18 | KEY | Key | | | Internal | |
| 1A8 | J19 | 19 | | Unused | | | Internal | |
| 1A8 | J19 | 20 | | Unused | | | Internal | |
| 1A8 | J19 | 21 | | Unused | | | Internal | |
| 1A8 | J19 | 22 | | Unused | | | Internal | |
| 1A8 | J19 | 23 | | Unused | | | Internal | |
| 1A8 | J19 | 24 | | Unused | | | Internal | |
| 1A8 | J19 | 25 | | Unused | | | Internal | |
| 1A8 | J19 | 26 | | Unused | | | Internal | |
| 1A8 | J19 | 27 | RAD.TEST.SEL* | Radiator Heat Test Mode Select | 26 | Single | Internal, De-Contamination Select | 3.4.1.4 |
| 1A8 | J19 | 28 | GROUND | Ground | 26 | Single | Internal, De-Contamination Select | 3.4.1.4 |
| 1A8 | J19 | 29 | EW.HALFC.TP(1) | East/West 1/2 Cycle Test 1 | 26 | Single | Internal, Scan Position | 3.4.1.4 |
| 1A8 | J19 | 30 | NS.HALFC.TP(1) | North/South 1/2 CYLCE Test Point 1 | 26 | Single | Internal, Scan Position | 3.4.1.4 |
| 1A8 | J19 | 31 | EW.HALFC.TP(2) | East/West 1/2 CYLCE Test 2 | 26 | Single | Internal, Scan Position | 3.4.1.4 |
| 1A8 | J19 | 32 | NS.HALFC.TP(2) | North/South 1/2 Cycle Test Point 2 | 26 | Single | Internal, Scan Position | 3.4.1.4 |
| 1A8 | J19 | 33 | NS.GATE.TP(1) | North/South Gate Test Point 1 | 26 | Single | Internal, Scan Position | 3.4.1.4 |
| 1A8 | J19 | 34 | EW.GATE TP(1) | East/West Gate Test Point 1 | 26 | Single | Internal, Scan Position | 3.4.1.4 |
| 1A8 | J19 | 35 | INIT.TEST(1) | Initiate Test 1 | 26 | Single | Internal, Scan Position | 3.4.1.4 |
| 1A8 | J19 | 36 | TEST RTN(1) | Test Return 1 | 26 | Single | Internal, Scan Position | 3.4.1.4 |
| 1A8 | J19 | 37 | NS.GATE.TP(2) | North/South Gate Test Point 2 | 26 | Single | Internal, Scan Position | 3.4.1.4 |
| 1A8 | J19 | 38 | EW.GATE.TP(2) | East/West Gate Test Point 2 | 26 | Single | Internal, Scan Position | 3.4.1.4 |
| 1A8 | J19 | 39 | INIT TEST(2) | Initiate Test 2 | 26 | Single | Internal, Scan Position | 3.4.1.4 |
| 1A8 | J19 | 40 | TEST.RTN(2) | Test Return 2 | 26 | Single | Internal, Scan Position | 3.4.1.4 |
| 1A8 | J19 | 41 | | Unused | | | Internal | |
| 1A8 | J19 | 42 | EW.I.MTR.TP(1) | E-W Motor Current Test Side 1 | 26 | T(42,43) | Internal, Motor Current | 3.4.1.4 |
| 1A8 | J19 | 43 | EW.I.M.TP.R(1) | E-W Motor Current Test Return Side 1 | 26 | T(42,43) | Internal, Motor Current | 3.4.1.4 |
| 1A8 | J19 | 44 | EW.I.MTR.TP(2) | E-W Motor Current Test SiDE 2 | 26 | T(44,45) | Internal, Motor Current | 3.4.1.4 |
| 1A8 | J19 | 45 | EW.I.M.TP.R(2) | E-W Motor CurrentTest Return Side 2 | 26 | T(44,45) | Internal, Motor Current | 3.4.1.4 |
| 1A8 | J19 | 46 | NS.I.MTR.TP(1) | N-S Motor Current Test Side 1 | 26 | T(46,47) | Internal, Motor Current | 3.4.1.4 |
| 1A8 | J19 | 47 | NS.I.M.TP.R(l) | N-S Motor Current Test Return Side 1 | 26 | T(46,47) | Internal, Motor Current | 3.4.1.4 |
| 1A8 | J19 | 48 | NS.I.MTR.TP(2) | N-S Motor Current Test Side 2 | 26 | T(48,49) | Internal, Motor Current | 3.4.1.4 |
| 1A8 | J19 | 49 | NS.I.M.TP.R(2) | N-S Motor Current Test Return Side 2 | 26 | T(48,49) | Internal, Motor Current | 3.4.1.4 |
| 1A8 | J19 | 50 | KEY | Key | | | Internal | |

| Module | J# | Pin# | Signal Name | Signal Description | Wire Size (AWG) | Wire Type | Signal Type | ICD Para. Reference |
|---|---|---|---|---|---|---|---|---|
| 1A8 | J20 | 1 | NS.FP.1(1) | North-South Fixed Pattern PROM Bit 1 Testpoint Side 1 | 26 | | Internal | 3.4.1.4 |
| 1A8 | J20 | 2 | NS.FP.2(1) | North-South Fixed Pattern PROM Bit 2 Testpoint Side 1 | 26 | | Internal | 3.4.1.4 |
| 1A8 | J20 | 3 | NS.FP.3(1) | North-South Fixed Pattern PROM Bit 3 Testpoint Side 1 | 26 | | Internal | 3.4.1.4 |
| 1A8 | J20 | 4 | NS.FP.4(1) | North-South Fixed Pattern PROM Bit 4 Testpoint Side 1 | 26 | | Internal | 3.4.1.4 |
| 1A8 | J20 | 5 | NS.FP.5(1) | North-South Fixed Pattern PROM Bit 5 Testpoint Side 1 | 26 | | Internal | 3.4.1.4 |
| 1A8 | J20 | 6 | NS.FP.6(1) | North-South Fixed Pattern PROM Bit 6 Testpoint Side 1 | 26 | | Internal | 3.4.1.4 |
| 1A8 | J20 | 7 | NS.FP.7(1) | North-South Fixed Pattern PROM Bit 7 Testpoint Side 1 | 26 | | Internal | 3.4.1.4 |
| 1A8 | J20 | 8 | NS.FP.8(1) | North-South Fixed Pattern PROM Bit 8 Testpoint Side 1 | 26 | | Internal | 3.4.1.4 |
| 1A8 | J20 | 9 | EW.FP.1(1) | East-West Fixed Pattern PROM Bit 1 Testpoint Side 1 | 26 | | Internal | 3.4.1.4 |
| 1A8 | J20 | 10 | EW.FP.2(1) | East-West Fixed Pattern PROM Bit 2 Testpoint Side 1 | 26 | | Internal | 3.4.1.4 |
| 1A8 | J20 | 11 | EW.FP.3(1) | East-West Fixed Pattern PROM Bit 3 Testpoint Side 1 | 26 | | Internal | 3.4.1.4 |
| 1A8 | J20 | 12 | EW.FP.4(1) | East-West Fixed Pattern PROM Bit 4 Testpoint Side 1 | 26 | | Internal | 3.4.1.4 |
| 1A8 | J20 | 13 | EW.FP.5(1) | East-West Fixed Pattern PROM Bit 5 Testpoint Side 1 | 26 | | Internal | 3.4.1.4 |
| 1A8 | J20 | 14 | EW.FP.6(1) | East-West Fixed Pattern PROM Bit 6 Testpoint Side 1 | 26 | | Internal | 3.4.1.4 |
| 1A8 | J20 | 15 | EW.FP.7(1) | East-West Fixed Pattern PROM Bit 7 Testpoint Side 1 | 26 | | Internal | 3.4.1.4 |
| 1A8 | J20 | 16 | EW.FP.8(1) | East-West Fixed Pattern PROM Bit 8 Testpoint Side 1 | 26 | | Internal | 3.4.1.4 |
| 1A8 | J20 | 17 | EW.SIN.TEST(1) | East-West Sine MDAC Testpoint Side 1 | 26 | | Internal | 3.4.1.4 |
| 1A8 | J20 | 18 | EW.COS.TEST(1) | East-West Cosine MDAC Testpoint Side 1 | 26 | | Internal | 3.4.1.4 |
| 1A8 | J20 | 19 | NS.FP.1(2) | North-South Fixed Pattern PROM Bit 1 Testpoint Side 2 | 26 | | Internal | 3.4.1.4 |
| 1A8 | J20 | 20 | NS.FP.2(2) | North-South Fixed Pattern PROM Bit 2 Testpoint Side 2 | 26 | | Internal | 3.4.1.4 |
| 1A8 | J20 | 21 | NS.FP.3(2) | North-South Fixed Pattern PROM Bit 3 Testpoint Side 2 | 26 | | Internal | 3.4.1.4 |
| 1A8 | J20 | 22 | NS.FP.4(2) | North-South Fixed Pattern PROM Bit 4 Testpoint Side 2 | 26 | | Internal | 3.4.1.4 |
| 1A8 | J20 | 23 | NS.FP.5(2) | North-South Fixed Pattern PROM Bit 5 Testpoint Side 2 | 26 | | Internal | 3.4.1.4 |
| 1A8 | J20 | 24 | NS.FP.6(2) | North-South Fixed Pattern PROM Bit 6 Testpoint Side 2 | 26 | | Internal | 3.4.1.4 |
| 1A8 | J20 | 25 | NS.FP.7(2) | North-South Fixed Pattern PROM Bit 7 Testpoint Side 2 | 26 | | Internal | 3.4.1.4 |
| 1A8 | J20 | 26 | NS.FP.8(2) | North-South Fixed Pattern PROM Bit 8 Testpoint Side 2 | 26 | | Internal | 3.4.1.4 |
| 1A8 | J20 | 27 | EW.FP.1(2) | East-West Fixed Pattern PROM Bit 1 Testpoint Side 2 | 26 | | Internal | 3.4.1.4 |
| 1A8 | J20 | 28 | EW.FP.2(2) | East-West Fixed Pattern PROM Bit 2 Testpoint Side 2 | 26 | | Internal | 3.4.1.4 |
| 1A8 | J20 | 29 | EW.FP.3(2) | East-West Fixed Pattern PROM Bit 3 Testpoint Side 2 | 26 | | Internal | 3.4.1.4 |
| 1A8 | J20 | 30 | EW.FP.4(2) | East-West Fixed Pattern PROM Bit 4 Testpoint Side 2 | 26 | | Internal | 3.4.1.4 |
| 1A8 | J20 | 31 | EW.FP.5(2) | East-West Fixed Pattern PROM Bit 5 Testpoint Side 2 | 26 | | Internal | 3.4.1.4 |
| 1A8 | J20 | 32 | EW.FP.6(2) | East-West Fixed Pattern PROM Bit 6 Testpoint Side 2 | 26 | | Internal | 3.4.1.4 |
| 1A8 | J20 | 33 | EW.FP.7(2) | East-West Fixed Pattern PROM Bit 7 Testpoint Side 2 | 26 | | Internal | 3.4.1.4 |
| 1A8 | J20 | 34 | EW.FP.8(2) | East-West Fixed Pattern PROM Bit 8 Testpoint Side 2 | 26 | | Internal | 3.4.1.4 |
| 1A8 | J20 | 35 | EW.SIN.TEST(2) | East-West Sine MDAC Testpoint Side 2 | 26 | | Internal | 3.4.1.4 |
| 1A8 | J20 | 36 | EW.COS.TEST(2) | East-West Cosine MDAC Testpoint Side 2 | 26 | | Internal | 3.4.1.4 |
| 1A8 | J20 | 37 | NS.SIN.TEST(1) | North-South Sine MDAC Testpoint Side 1 | 26 | | Internal | 3.4.1.4 |
| 1A8 | J20 | 38 | NS.COS.TEST(1) | North-South Cosine MDAC Testpoint Side 1 | 26 | | Internal | 3.4.1.4 |
| 1A8 | J20 | 39 | CPYI5.T(1) | North-South Compensated Address Counter I5 Side 1 | 26 | | Internal | 3.4.1.4 |
| 1A8 | J20 | 40 | CPYI5.T(2) | North-South Compensated Address Counter I5 Side 2 | 26 | | Internal | 3.4.1.4 |
| 1A8 | J20 | 41 | CPXI5.T(1) | East-West Compensated Address Counter I5 Side 1 | 26 | | Internal | 3.4.1.4 |
| 1A8 | J20 | 42 | CPXI5.T(2) | East-West Compensated Address Counter I5 Side 2 | 26 | | Internal | 3.4.1.4 |
| 1A8 | J20 | 43 | GROUND | Ground | 24 | Single | Internal | 3.4.1.4 |
| 1A8 | J20 | 44 | GROUND | Ground | 24 | Single | Internal | 3.4.1.4 |
| 1A8 | J20 | 45 | GROUND | Ground | 24 | Single | Internal | 3.4.1.4 |
| 1A8 | J20 | 46 | GROUND | Ground | 24 | Single | Internal | 3.4.1.4 |
| 1A8 | J20 | 47 | KEY | Key | | | Internal | |
| 1A8 | J20 | 48 | KEY | Key | | | Internal | |
| 1A8 | J20 | 49 | NS.SIN.TEST(2) | North-South Sine MDAC Testpoint Side 2 | 26 | | Internal | 3.4.1.4 |
| 1A8 | J20 | 50 | NS.COS.TEST(2) | North-South Cosine MDAC Testpoint Side 2 | 26 | | Internal | 3.4.1.4 |

## 5.5 Imager Interface Control Drawings

The Interface Control Drawings for the Imager instrument are attached for reference. These drawings are controlled as ITT document numbers 8175731, 8175732, and 8175733 for the Sensor Module, Electronics Module and Power Supply Module, respectively.

The Thermal Hardware Installation page (sheet 7) reflects a preliminary design and will be modified upon selection of the spacecraft vendor. Final blanket design will be a joint effort between ITT and the spacecraft vendor.

Drawing 8175731 (Imager Sensor Module ICD) Notes:

1. Only the item described on this drawing when procured from ITT is approved by NASA for use in the applicational specified herein. A substitute item shall not be used without prior testing and approval by NASA.

2. Performance per ITT A/CD specification 8175725. Electrical interface and connector pin assignments per ITT A/CD ICD 8175726.

3. Identification marking, where shown per ITT A/CD specification 8175725.

4. For Handling considerations, see the following:
   A) For static sensitive device handling, see ITT A/CD specification 8151870.
   B) For sensitive thermal control surfaces, see ITT A/CD specification 8148730.
   C) For handling and installation requirements, see ITT A/CD procedure 8156117.
   D) Contamination Control per ITT A/CD specification 8160070.

5. Coordinate system definition:

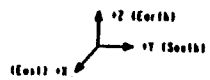


6. ⊕ Indicates nominal Center of Gravity location (see ITT A/CD 8175726 for nominal values (for reference only). Actuals to be provided in the final data package upon delivery of instrument.

7. Moments of Inertia (calculated about C.G.'s) per ITT A/CD ICD 8175726.

8. Weight per ITT A/CD ICD 8175726.

9. Interface mounting holes (Ø0.344 DIA ; 5 holes) to be located using ITT drill template (part number TBD) with pin engaging (Ø0.320 DIA reference hole).

10. Three shaded mounting pads are primary interface plane [-A-]. When the primary pads are bolted and torqued, the three remaining secondary pads shall be shimmed at the spacecraft vendor facility to match the nominal gap (defined at ITT and supplied to the spacecraft vendor) within ±.001 inches.

11. Footprint contact area consists of 6 pads. Each pad has an area of 0.94 $in^2$ (6.06 $cm^2$). Each pad is flat within 0.001 TIR.

12. Power/Thermal Dissipation per ITT A/CD ICD 8175726.

13. Operating temperature limits as described in ITT A/CD ICD 8175726.

14. Scan angles (-Z/+X, -Y/+Y) from optical port.

15. Fields of view: A) Optical port
    B) Radiant cooler-refer to ITT A/CD ICD 8175726 for load values
    C) Louvers

16. Optical reference cube visible from the +Z, ±Y and -X faces. Used during spacecraft integration. The angles between this cube and the optical axis to be measured at ITT with an accuracy of ± 0.015 deg. in 3-axis. Cube flies with spacecraft. Do not remove cube. Alignment requirements per ITT A/CD specification 8175725.

17. Align sensor module at spacecraft level per satellite contractor procedure.

18. Screw heads and blanket grounds not shown, may protrude above external panels, 0.18 inches or less.

19. This surface is velcro for door latching. Bracket covered with kapton tape, with an absorbtivity of 0.40 and an emissivity of >0.60 (B.O.L.).

20. These areas indicate raised access panels. Height above indicated surface, including fastener height, not to exceed 0.37.

21. Fittings for instrument lifting tubes are provided at these locations. Remove lifting and integration tube fittings for flight. Install plugs, ITT PN 8147742, in six (6) places for flight. Torque to 40 ± 2 in-lbs. Stake plugs during satellite integration per satellite contractor procedure.

22. This port to be for flushing instrument with dry nitrogen for transport and storage. Cap to be safety wired or omitted for launch. Purge rate 10.0 CFPM to maintain a maximum humidity level of 20%. This purge may be suspended during assembly processing, thermal-vacuum testing and transportation.

23. Both cooler cover status circuits (closed and captured) must read normally open circuit with cooler cover closed and closed with cooler cover deployed. For wire list/pin assignment, see ITT A/CD ICD 8175726.

24. Electro Explosive Device (EED) cartridge to be provided by ITT. This module assembly will be delivered to the satellite contractor with the EED cartridge and associated hardware omitted. Cartridge must be installed before launch. Final staking for flight will be done by the satellite contractor. The EED cover shall be installed when the mating connectors are not installed. The EED cover shall be removed for flight.

25. Cooler cover and associated mounting hardware along with exterior multi-layer insulation blanket over radiant cooler to be supplied by ITT. Nominal thickness of blanket of 0.25 inches, is not included in overall instrument dimensions. Outer layer of 5 mil silver teflon (teflon coat) with effective emissivity $\epsilon \geq 0.80$. Grounded per ITT A/CD specification 8175725.

26. Kapton exterior multi-layer blankets with an effective emissivity $\epsilon \geq 0.05$ to be supplied by ITT. Nominal thickness of 0.25 inches is not included in overall instrument dimensions.

27. Harness provided by the satellite contractor.

28. All optical surfaces shall be cleaned by ITT personnel per 8147283 prior to flight.

29. Thermo couple and accelerometers located per ITT A/CD drawing 8162459. Prior to flight they shall be grounded and terminated.

30. Configure per table below.

31. Exterior envelope of 0.5 due to dynamic deflections.

30 IMAGER CONFIGURATION GUIDE

| ITEM | QUANTITY | SHIP FROM ITT | ENVIRONMENTAL TEST | SHIP TO LAUNCH SITE | FLIGHT | STORAGE | TESTING WITH OPTICAL STIMULUS | TESTING WITHOUT OPTICAL STIMULUS |
|---|---|---|---|---|---|---|---|---|
| LOUVER COVER | 1 | OFT | OFT | OFT | OFT | ON | ON | ON |
| LIFT TUBE PLUGS | 6 | OFT | ON | ON | ON | ON | OPT | OPT |
| OPTICAL PORT COVER | 1 | ON | OFT | ON | OFT | ON | OFT | ON |
| RADIANT COOLER SOFT COVER | 1 | ON | OFT | ON | OFT | ON | ON | ON |
| LIFT TUBES | 6 | OFT | OFT | OFT | OFT | OFT | OPT | OPT |
| CONNECTOR COVER | 1 | OFT | ON | ON | ON | ON | OPT | OPT |
| WITNESS MIRROR | 1 | ON | ON | ON | OFT | ON | ON | ON |
| OPTICAL PORT SUNSHIELD | 1 | OFT | ON | ON | ON | ON | OPT | OPT |
| EEDS | 2 | OFT | ON | OFT | ON | OFT | OPT | OPT |
| CABLE CUTTER | 2 | OFT | ON | OFT | ON | OFT | OPT | OPT |
| HARNESS HIGHGE REPLACEMENT PANEL | 1 | OFT | OFT | OFT | ON | OFT | OFT | OFT |
| EEI SHORTING BLOCK | 1 | ON | OFT | OFT | OFT | OFT | OFT | OFT |

OPT:OPTIONAL

INTERFACE CONTROL DRAWING

| REVISIONS | | | |
|---|---|---|---|
| SYM | DESCRIPTION | DATE | APPROVED |
| A | RELEASED TO PRODUCTION PER ECO | | |

| | | | |
|---|---|---|---|
| MATERIAL | | | |
| FINISH | | | |
| NEXT ASSEMBLY | USED ON APPLICATION | | |
| SHEET REVISION RECORD | | | |

UNLESS OTHERWISE SPECIFIED TOLERANCES
DIMENSIONS ARE IN INCHES ONLY UNLESS OTHERWISE SPECIFIED
DECIMAL ± .XX ± .01 ± .XXX ± .005 ± .XXXX ± .0005
ANGLE ± 0°30' ± 0°15' ± 0°5'
SCALE 1/4 1/2 1/1
SCALE 1:1

CONTRACT NO. NAS5-10030
APPROVALS
DRAWN J. HILDEBRANDT 12-3-81
ENGINEER
CHECK
MANUFACTURE
QUALITY
STATUS
SCALE 1/4

ITT AEROSPACE/COMMUNICATIONS DIVISION FORT WAYNE, INDIANA, U.S.A.

MODULE, IMAGER SENSOR

SIZE E | CODE IDENT NO. 31550 | DWG NO. 8175731

SCALE 1/4 & AS NOTED | SHEET 1 OF 3

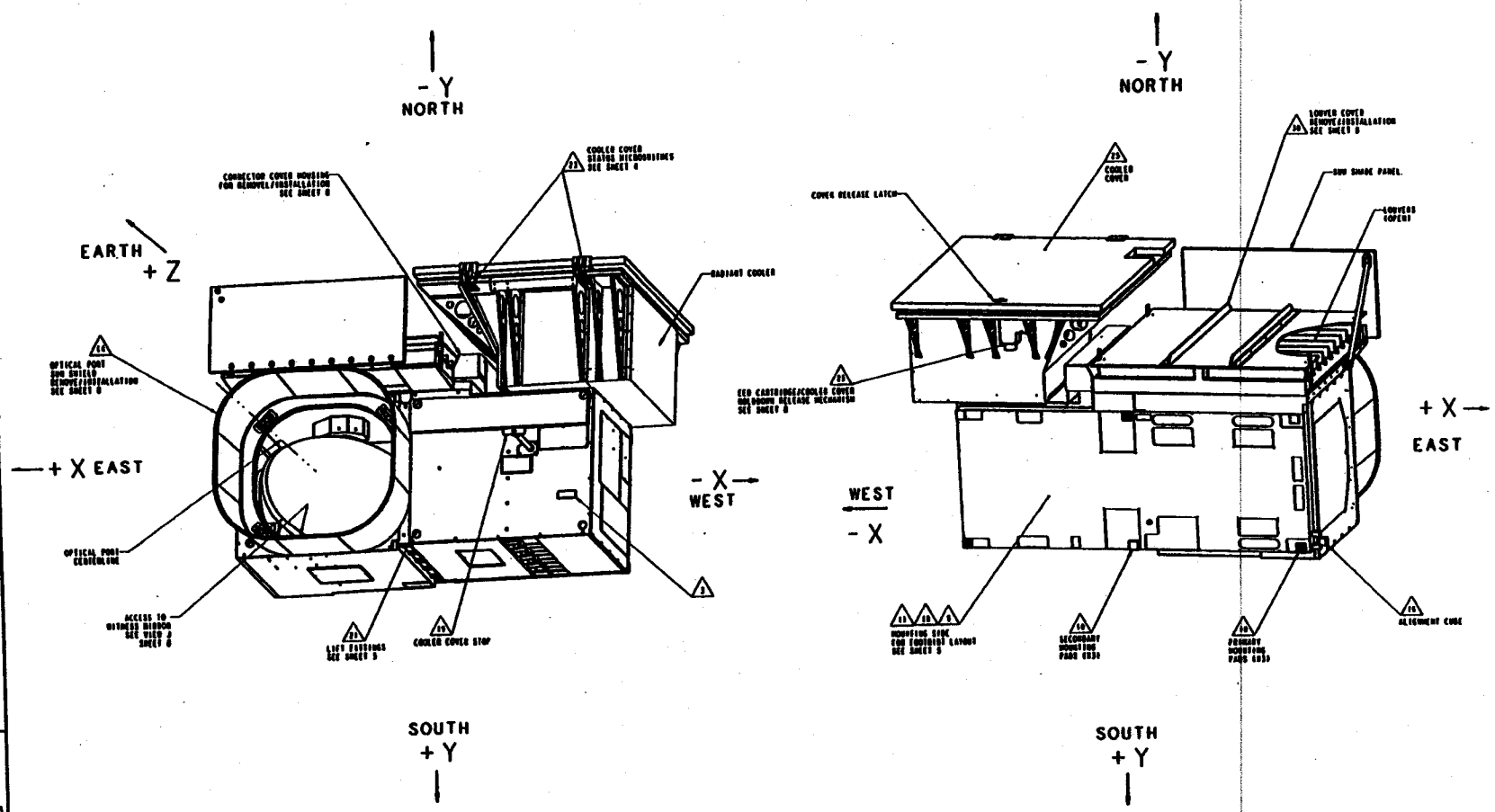


| REVISIONS | | | |
|---|---|---|---|
| LTR | DESCRIPTION | DATE | APPROVED |
| A | RELEASED IN PRODUCTION PER ECO | | |

E 31550 817573

SCALE SHEET 1

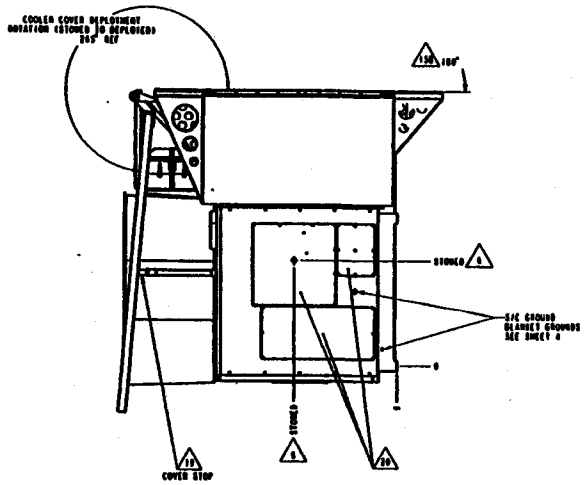


COOLER COVER DEPLOYER
WEST VIEW

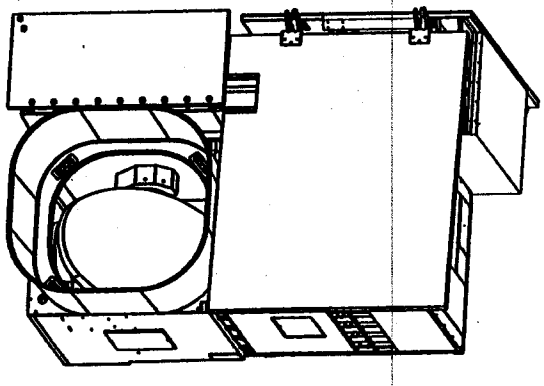

COOLER COVER DEPLOYED
EARTH VIEW

| REVISIONS | | | |
|---|---|---|---|
| LTR | DESCRIPTION | DATE | APPROVED |
| - | RELEASED TO PRODUCTION PER ECO | | |

| | | |
|---|---|---|
| SIZE E | CODE IDENT NO 31550 | DWG NO 8175731 |
| SCALE 1/2 | | SHEET 3 |

8175731

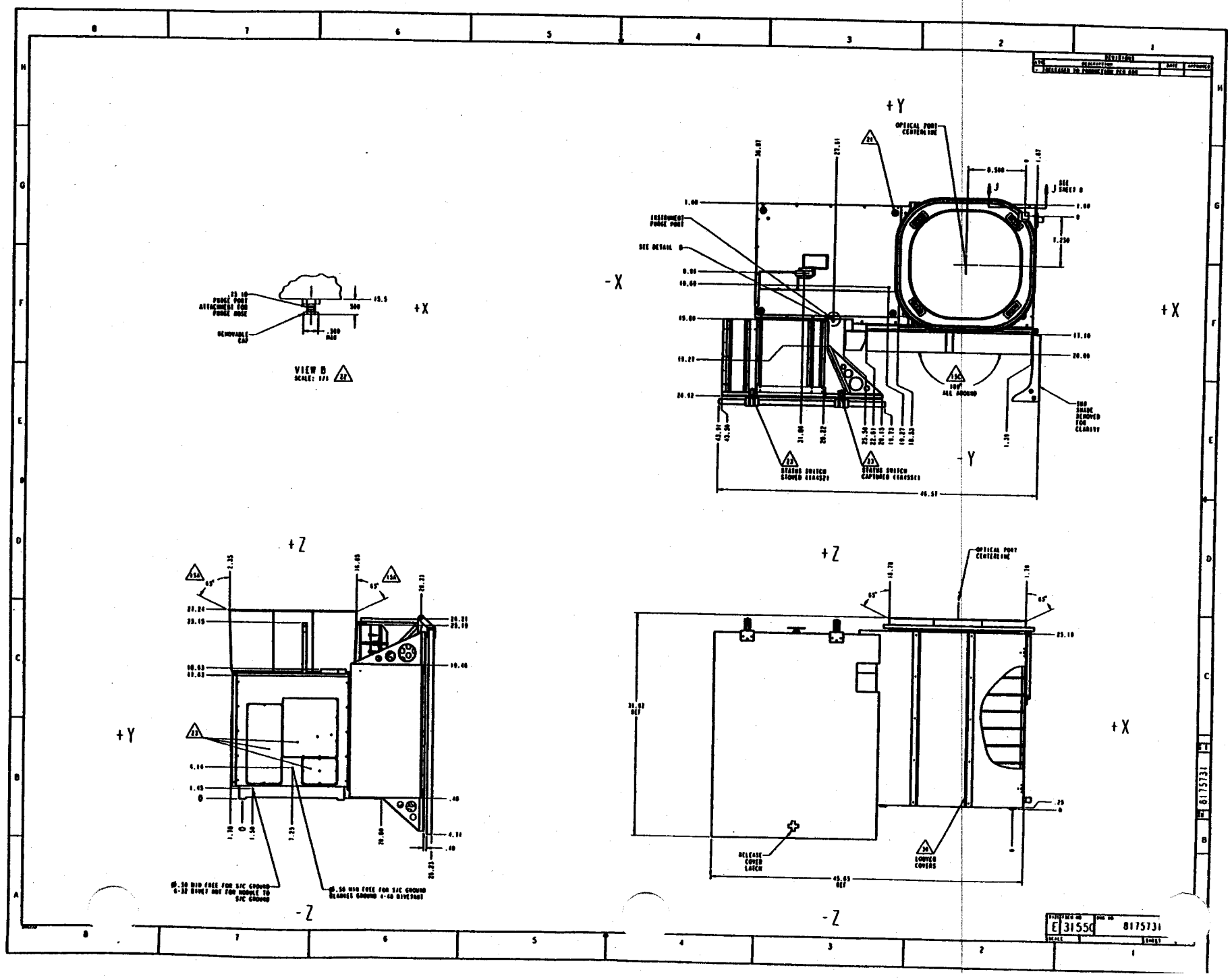
+Y
OPTICAL PORT CENTERLINE
INSTRUMENT PURGE PORT
SEE DETAIL B
SEE SHEET 8
STATUS SWITCH STOWED (CLOSED)
STATUS SWITCH CAPTURED (CLOSED)
SHAKE REMOVED FOR CLARITY
360° ALL AROUND
-X
+X
-Y
PURGE PORT ATTACHMENT FOR PURGE HOSE
REMOVABLE CAP
VIEW B
SCALE: 1/1
+Z
-Z
+Y
+X
OPTICAL PORT CENTERLINE
RELEASE COVED LATCH
LOUVED COVERS
E31550
8175731

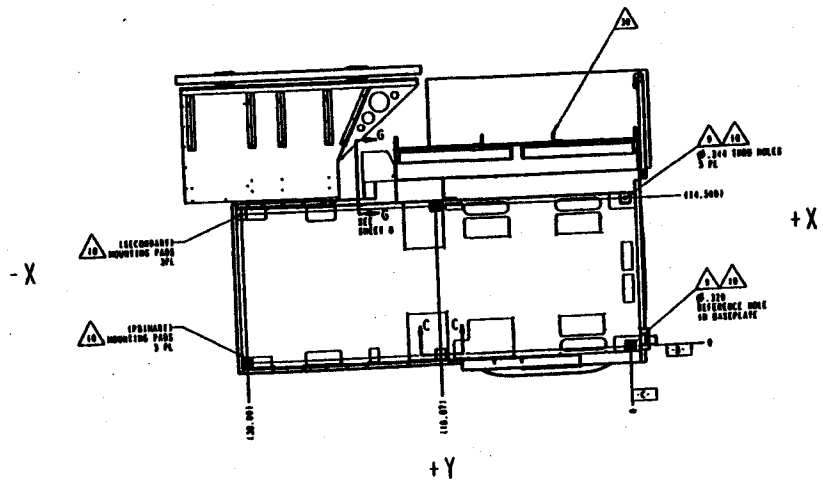


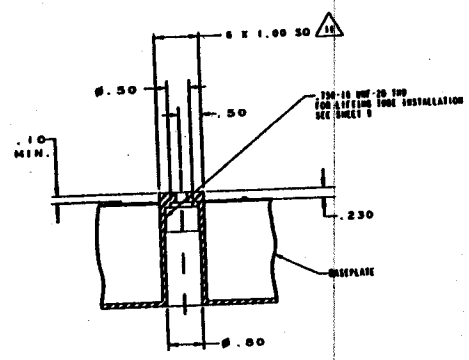


SECTION C-C
SCALE 1/1
6X

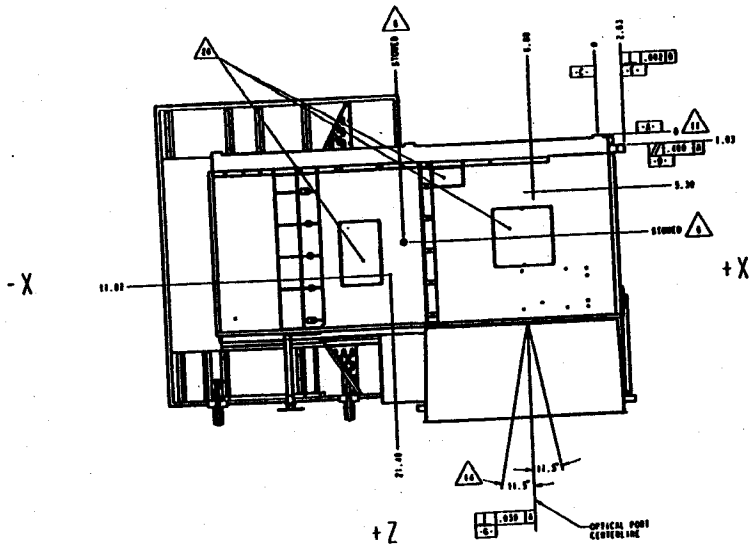


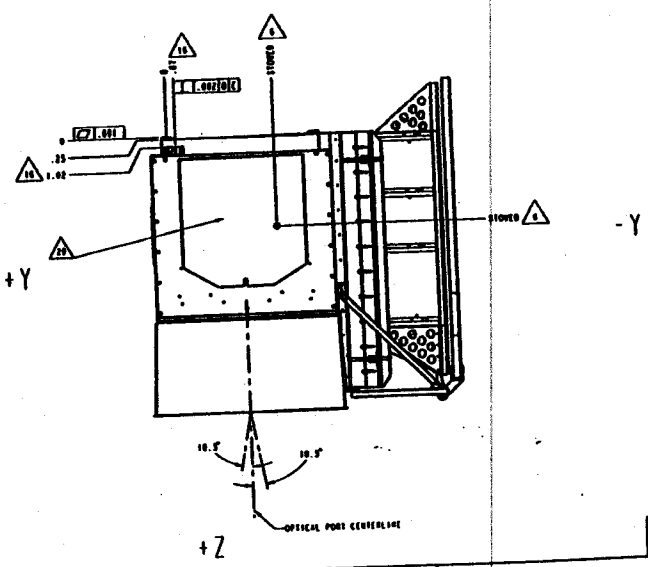


| | | | |
|---|---|---|---|
| SIZE | CAGE CD | DWG NO. | |
| E | 31550 | 8175731 | |
| SCALE | | SHEET 3 | |

8175731

| REVISIONS | | | |
|---|---|---|---|
| LTR | DESCRIPTION | DATE | APPROVED |
| A | RELEASED ON PRODUCTION PER ECN | | |

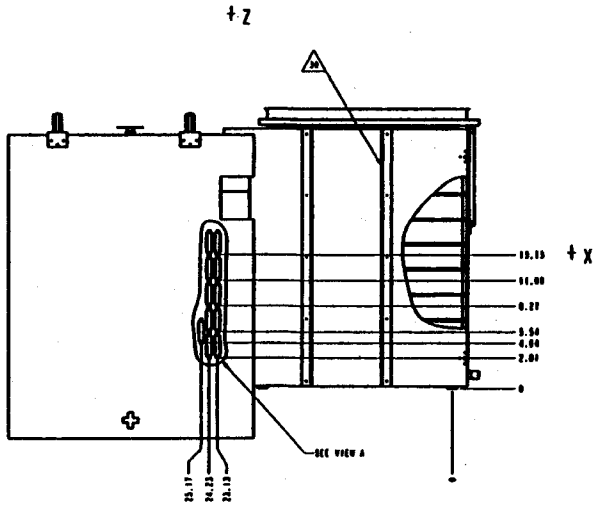


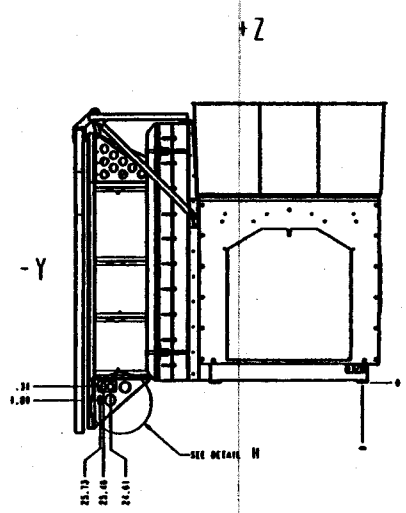

VIEW E-E (J11 ONLY)
SCALE: NONE
CCW 90

VIEW F-F
SCALE: NONE
TYP 2 0
CCW 90

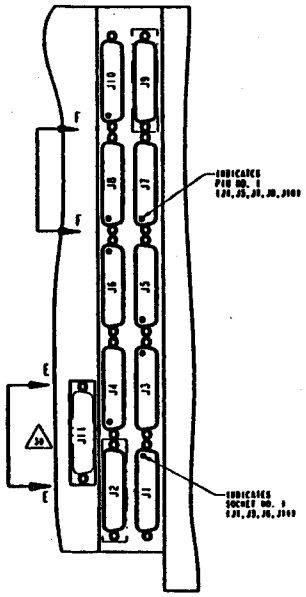


VIEW A
SCALE NONE

TORQUE REQUIREMENTS FOR CONNECTORS AT SPACECRAFT LEVEL 40A2 10-02

CONNECTOR PIN ASSIGNMENTS PER ITT AFCD INTERFACE CONTROL DOCUMENT 8175126

| CONNECTOR INFORMATION | | | |
|---|---|---|---|
| # | TYPE | KEYING | FUNCTION |
| J1 | DDMA-H-50S-NMB-K47 | 1, 18 | S-HOD TELEMETRY |
| J2 | DDMA-H-50S-NMB-K47 | 16, 17 | NOT USED |
| J3 | DDMA-H-50S-NMB-K47 | 2, 50 | SERVO PREAMPS |
| J4 | DDMA-H-50P-NMB-K47 | 35, 49 | VIDEO POWER |
| J5 | DDMA-H-50P-NMB-K47 | 33, 34 | SCAN CONTROL 02 |
| J6 | DDMA-H-50S-NMB-K47 | 35, 50 | VIDEO OUTPUT |
| J7 | DDMA-H-50P-NMB-K47 | 17, 34 | SCAN CONTROL 01 |
| J8 | DDMA-H-50P-NMB-K47 | 4, 37 | SPACECRAFT COMMAND/TELEMETRY |
| J9 | ... | -- | NOT USED |
| J10 | DDMA-H-25P-NMB-K47 | -- | MAIN BUS POWER |
| J11 | DDMA-H-50S-NMB-K47 | -- | COOLER TEST |
| J12 | NSI SEB26100001-250 | -- | COOLER COVER RELEASE-SECONDARY |
| J13 | NSI SEB26100001-250 | -- | COOLER COVER RELEASE-PRIMARY |
| J14 | DDMA-H-6P-NMB-K47 | -- | COOLER COVER STATUS |

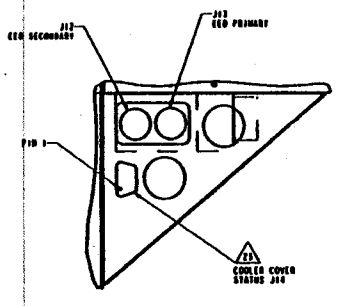


DETAIL H
SCALE 1/1

ELECTRICAL INSTALLATION

| SIZE | CODE IDENT NO. | DWG NO. |
|---|---|---|
| E | 31550 | 8175 |

SCALE 1/4 | SHEET

8175731

| REVISIONS | | | |
|---|---|---|---|
| SYM | DESCRIPTION | DATE | APPROVED |
| - | RELEASED AS PRODUCTION DESIGN | | |

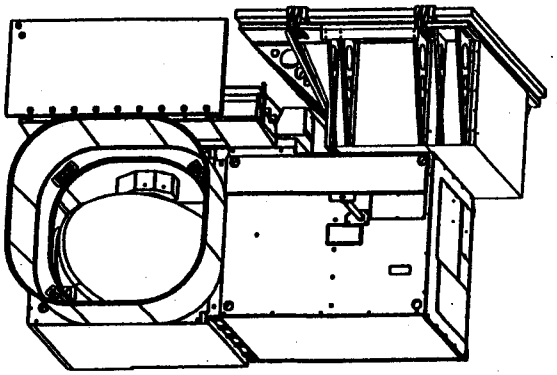

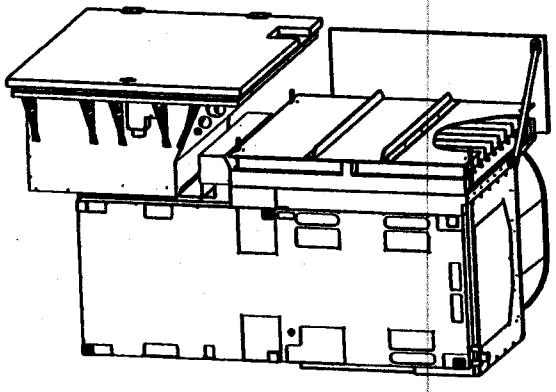

| BLANKET NO. | MATERIAL | EMISSIVITY | LOCATION |
|---|---|---|---|
| | | | |
| | | | |
| | | | |
| | | | |
| | | | |
| | | | |
| | | | |
| | | | |

THIS SHEET TO BE UPDATED UPON SPACECRAFT VENDOR SELECTION.

| | |
|---|---|
| E 31550 | 8175731 |

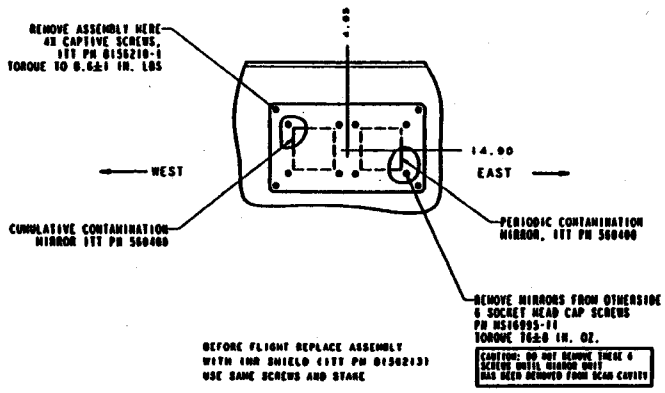


BEFORE FLIGHT REPLACE ASSEMBLY
WITH (NR SHIELD (ITT PN 8156213)
USE SAME SCREWS AND STAKE

SECTION J-J SH. 4
SCALE : NONE

WITNESS MIRROR
REMOVAL/ INSTALLATION
(MIRROR ASSY ITT PART NO. 8156211)

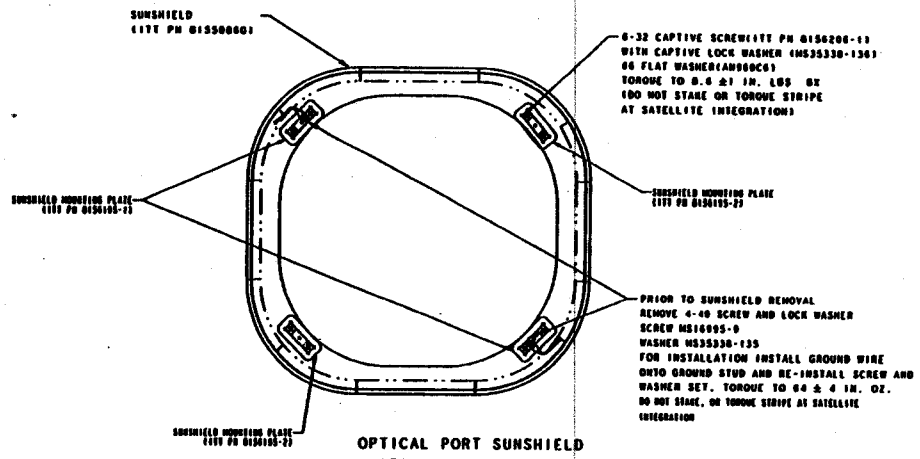


OPTICAL PORT SUNSHIELD
INSTALLATION / REMOVAL

FOR FOV DIMENSION OF SUNSHIELD
SEE ITT DWG 8147207.
FOR INSTALLATION SEE ITT DWG 8147190.

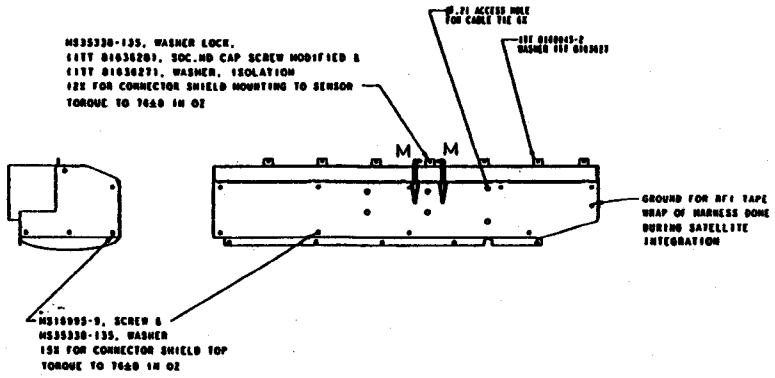


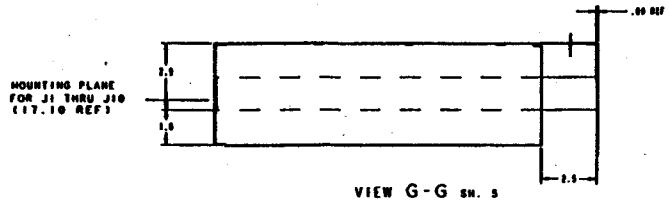


VIEW G-G SH. 5
SCALE: NONE

CONNECTOR COVER HOUSING
INSTALLATION / REMOVAL

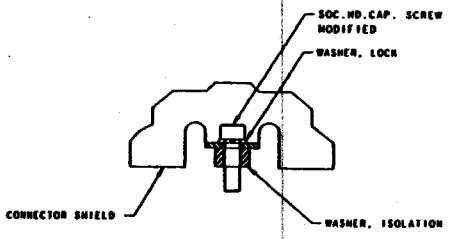


VIEW M-M
SCALE: NONE
ROTATED 180

ITEM REMOVAL/INSTALLATION
INFORMATION

E 31550 8175731

| REVISIONS | | | |
|---|---|---|---|
| LTR | DESCRIPTION | DATE | APPROVED |
| A | RELEASED TO PRODUCTION PER ECO | | |

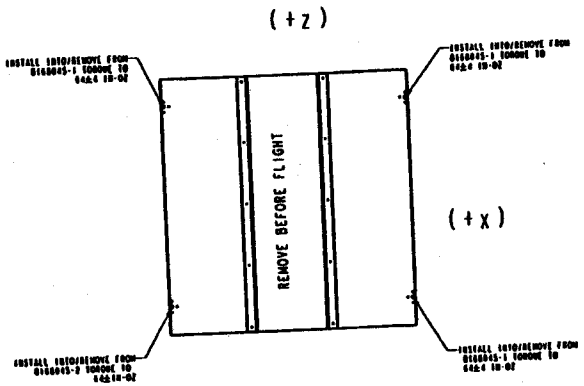


LOUVER COVER
INSTALLATION/REMOVAL

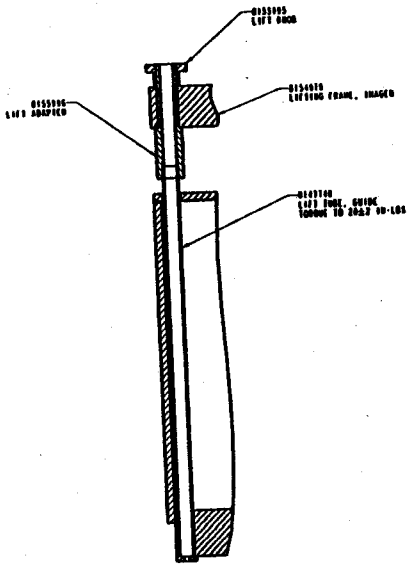


PART OF SECTION C-C
SEE SHEET 3

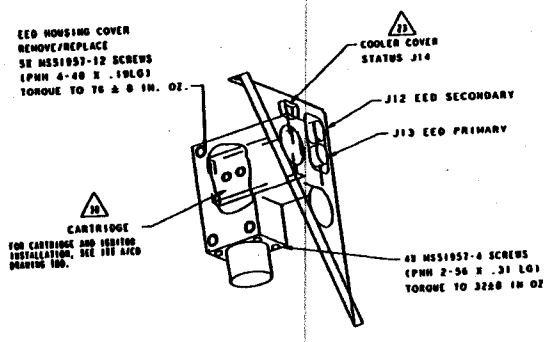


EED HOUSING
SCALE : NONE

INSTALLATION / REMOVAL

FOR RECONFIGURING HOLDDOWN MECHANISM
AFTER TEST FOR FLIGHT CONDITION
SEE ITT A/CD DRAWING TBD, TEST PROCEDURE TBD.
FOR STOWING COOLER COVER FOR FLIGHT
SEE ITT A/CD DRAWING TBD, TEST PROCEDURE TBD.

| SIZE | CAGE CODE | DWG NO | REV |
|---|---|---|---|
| E | 31550 | 8175731 | |
| SCALE 1/2 | | SHEET 3 | |

Drawing 8175732 Imager Electronics-Module ICD Notes:

1. Only the item described on this drawing, when manufactured by ITT A/CD is approved by NASA for use in the application(s) specified hereon. A substitute item shall not be used without prior testing and approval by NASA.
2. Performance per ITT A/CD specification [illegible]. Electrical interface and connector pin assignments per ITT A/CD ICD [illegible].
3. Identification marking, where shown, per ITT A/CD [illegible].
4. For handling considerations, see the following:
   a) For static sensitive device handling, see ITT A/CD specification [illegible].
   b) For sensitive thermal control surfaces, see ITT A/CD specification [illegible].
   c) For handling and installation requirements, see ITT A/CD procedure [illegible].
   d) Contamination Control per ITT A/CD specification [illegible].
5. Coordinate system definition:

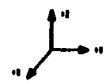


6. ● Indicates nominal Center of Gravity (nominal values for reference only). Actuals to be provided in the final data package upon delivery of instrument.
7. Moments of Inertia (calculated about C.G.'s) per ITT A/CD ICD [illegible].
8. Weight per ITT A/CD ICD [illegible].
9. Interface mounting holes for 6-32 and 10-32 socket head screws to be drilled using ITT drill template [illegible] during satellite integration (to be provided to the satellite contractor).
10. Mount using six 10-32 fasteners (w/washers) along the center wall and eight #10-32 fasteners (w/washers) around the perimeter.
11. Mounting surface area: 402.9 in²
12. Thermal mounting requirement: Flush mount with GEV filler during satellite integration.
13. Thermal dissipation: See ITT A/CD ICD [illegible].
14. Finish:
    Exterior Surface - Black paint (Chemglaze Z306). E ≥ 0.8.
    Mounting Surface - none
15. Specific Heat: See ITT A/CD ICD [illegible].
16. Qualification temperatures: per ITT A/CD specification [illegible].
17. Average Unit density: See ITT A/CD ICD [illegible].
18. When mounted on flat surface with 6 in-lbs torque on mounting screws, measured flatness less than 0.015 across mounting surface.
19. Electrical bonding requirements: ground per MIL-B-5087. Grounding point free of paint for 0.5" diameter minimum.
20. Center plug PN [illegible] removable for satellite integration. Torque to 8 ± 1 in-lb [illegible]. Stake during satellite integration.
21. Covers for connectors J11-18 are not staked prior to shipment to the satellite vendor in order to perform spacecraft testing. Satellite vendor required to torque connector cover screws to [illegible] ± [illegible] in-oz and stake in place after final installation.
22. For removal of Electronics Module from the spacecraft mounting panel, install .250-20 UNC to 4 corner locations marked "A".

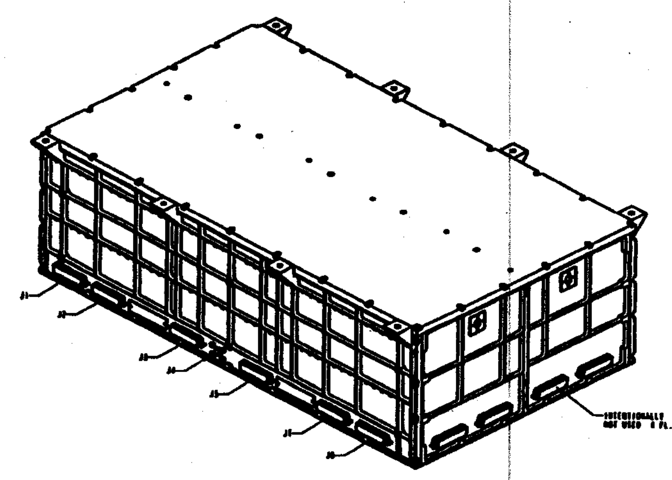


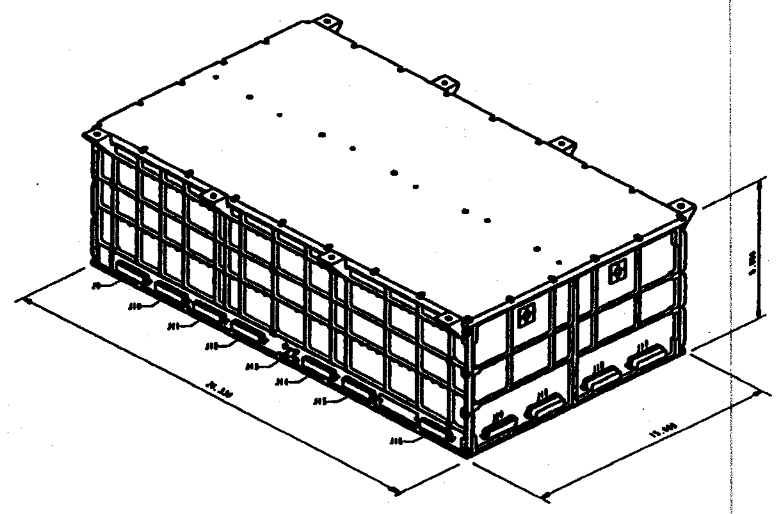

ITT AEROSPACE/COMMUNICATIONS DIVISION
FORT WAYNE, INDIANA, U.S.A.

ICD: MODULE, ELECTRONICS-IMAGER

SIZE E | CODE IDENT NO. 31550 | DWG NO. 8175732

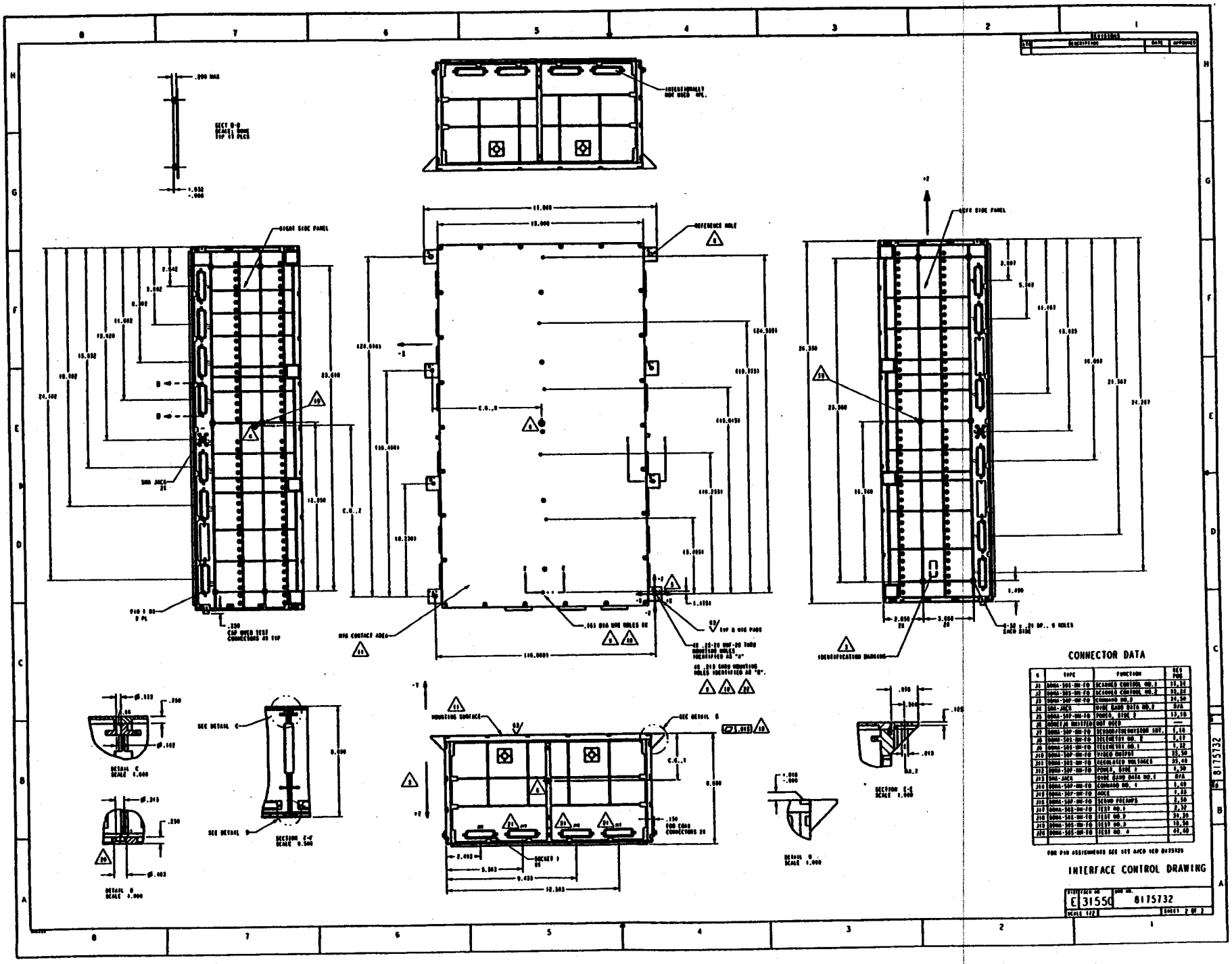
RIGHT SIDE PANEL
LEFT SIDE PANEL
REFERENCE HOLE
SEE DETAIL C
SEE DETAIL D
MOUNTING SURFACE
SEE DETAIL G
DETAIL C
SCALE 1.000
DETAIL D
SCALE 1.000
SECTION E-E
SCALE 1.000
SECTION C-C
SCALE 0.500
DETAIL G
SCALE 1.000
IDENTIFICATION DRAWING
CONNECTOR DATA
INTERFACE CONTROL DRAWING
8175732
E 31550
SHEET 2 OF 2

Drawing 8175733 (Imager PSM Interface Control Drawing) Notes:

1. Only the item described on this drawing, when manufactured by GSFC ACCD is approved by NASA for use in the qualification/acceptance testing. A substitute item could not be used without prior testing and approval by NASA.

2. Performance per GSFC ACCD specification 8175725. Electrical interface and connector pin assignments per GSFC ICD 8175726.

3. Identification marking, where shown, as directed by GSFC ACCD 8175725
   GSFC part no. 8175733
   Serial Number
   FSCM 31550

4. For Handling considerations, see the following:
   A) For static sensitive device handling, See GSFC ACCD specification 8151020.
   B) For possible thermal control surfaces, see GSFC ACCD specification 8150110.
   C) For handling and installation requirements, see GSFC ACCD procedure 8150242.
   D) Contamination Control per GSFC ACCD specification 8160000.

5. Coordinate system definition:

6. ⊕ indicates Center of Gravity (for reference only). See GSFC ACCD ICD 8175726 for nominal values. Actuals to be provided in the final data package upon delivery of instrument.

7. Moments of Inertia (calculated about C.G.*s) per GSFC ACCD ICD 8175726.

8. Weight per GSFC ACCD ICD 8175726.

9. Interface mounting holes for 0-32 socket head screws to be drilled using GSFC drill template 8152330 during satellite integration (to be provided to the satellite contractor)

10. Mount using six 10-32 fasteners (unknown).

11. Mounting surface area: 91.5 in²

12. Thermal mounting requirement: Flush mount with RTV filler during satellite integration

13. Thermal dissipation: See GSFC ACCD ICD 8175726.

14. Finish: Black paint Z-306 except mounting surface. ε > 0.8.See note 20.

15. Specific Heat: See GSFC ACCD ICD 8175726.

16. Qualification temperatures: per GSFC ACCD specification 8175725.

17. Average Watt density: See GSFC ACCD ICD 8175726

18. D.C. power input from primary power bus: See GSFC ACCD ICD 8175726.
    For power loss, see Note 13.

19. Measured flatness around the perimeter to be less than 0.015

20. Free at point 0.5" diameter minimum.

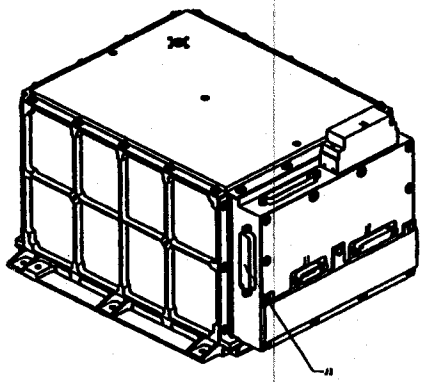


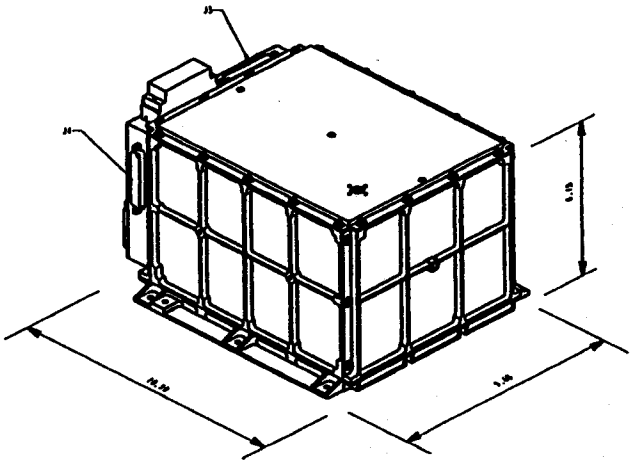


| REVISIONS | | | |
|---|---|---|---|
| LTR | DESCRIPTION | DATE | APPROVED |

| | | | |
|---|---|---|---|
| MATERIAL | | | |
| FINISH | | | |
| NEXT ASSEMBLY | NEXT NO | | |
| APPLICATION | | | |

| | |
|---|---|
| CONTRACT NO. | NAS3-26690 |
| APPROVALS | |
| DRAWN | |
| CHECKED | |
| ENGR | |
| STAFF | |
| SYSTEM | |
| STORE | |

ITT AEROSPACE/COMMUNICATIONS DIVISION
FORT WAYNE, INDIANA, U.S.A.

MODULE, POWER SUPPLY - IMAGER

SYSTEM NO. E31550 | DWG NO. 8175733

SCALE | SHEET 1

SHEET REVISION RECORD

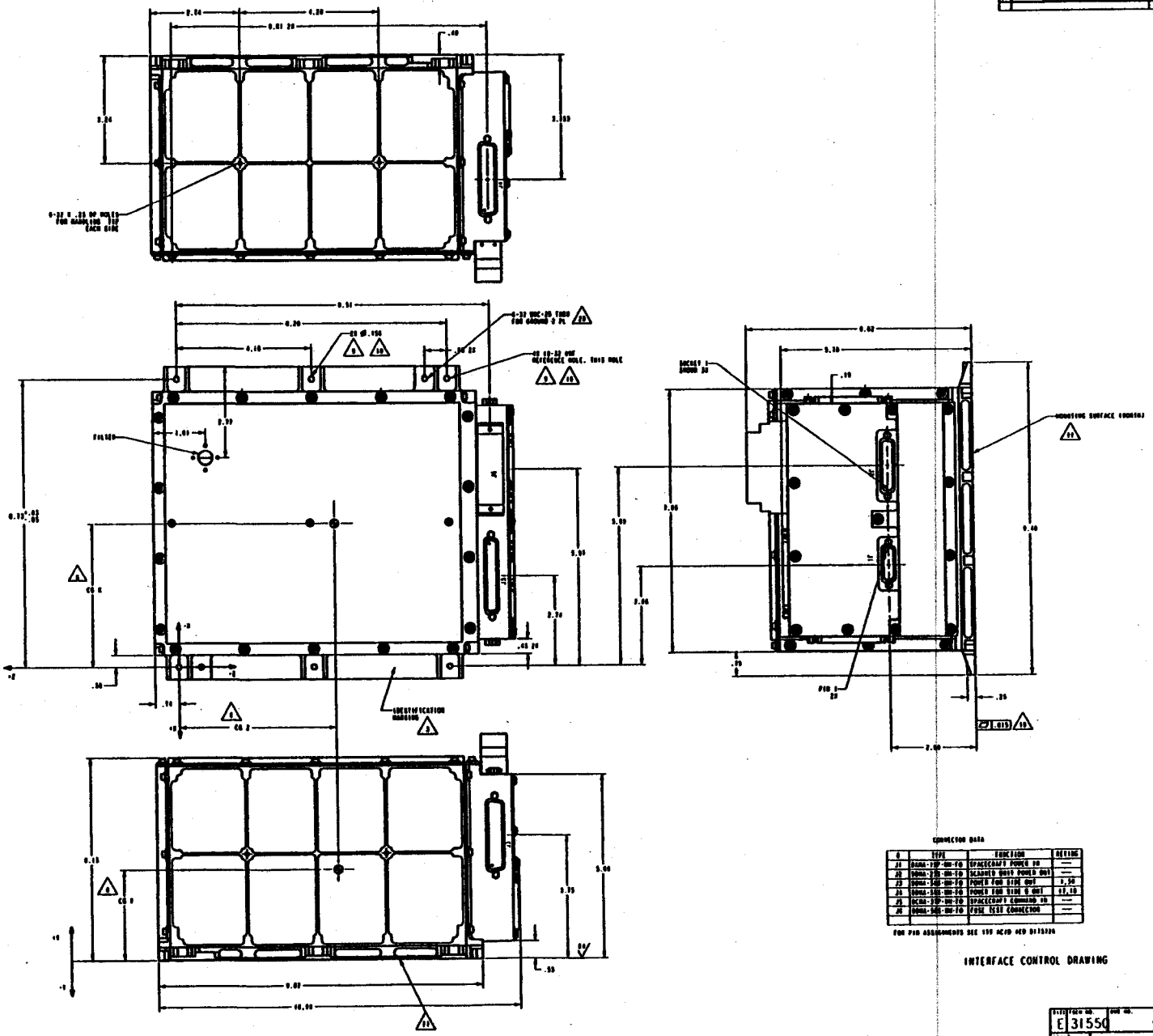


CONNECTOR DATA

| # | TYPE | FUNCTION | RATING |
|---|---|---|---|
| J1 | DAMA-37P-BN-FO | SPACECRAFT POWER IN | — |
| J2 | DAMA-25S-BN-FO | SCANNER UNIT POWER OUT | — |
| J3 | DAMA-14S-BN-FO | POWER FOR DIRE OUT | 3.5A |
| J4 | DAMA-14S-BN-FO | POWER FOR DIRE 8 OUT | 13.1A |
| J5 | DCMA-37P-BN-FO | SPACECRAFT COMMAND IN | — |
| J6 | DAMA-14S-BN-FO | FUSE TEST CONNECTOR | — |

FOR PIN ASSIGNMENTS SEE 155 ACID HCD 8175726

INTERFACE CONTROL DRAWING

| SIZE | FSCM NO. | DWG NO. |
|---|---|---|
| E | 31550 | 8175733 |

SCALE | SHEET 1 OF 1

Attachment D

# INTERFACE CONTROL DOCUMENT

# FOR

# THE GEOSTATIONARY OPERATIONAL ENVIRONMENTAL SATELLITE

# GOES-NOPQ SOUNDER

**8175751A**

**14 August 1997**

**Contract NAS5-96090**

Prepared for

National Aeronautics and Space Administration
Goddard Space Flight Center
Greenbelt, MD 20771

**ITT Aerospace/Communications Division**
**ITT Defense and Electronics Inc.**
**Fort Wayne Indiana 46801-3700**

Attachment D

# INTERFACE CONTROL DOCUMENT

# FOR

# THE GEOSTATIONARY OPERATIONAL ENVIRONMENTAL SATELLITE

# GOES-NOPQ SOUNDER

**8175751A**

**14 August 1997**

**Contract NAS5-96090**

**Prepared for**

National Aeronautics and Space Administration
Goddard Space Flight Center
Greenbelt, MD 20771

**ITT Aerospace/Communications Division**
**ITT Defense and Electronics Inc.**
**Fort Wayne Indiana 46801-3700**

# INTERFACE CONTROL DOCUMENT

# FOR

# THE GEOSTATIONARY OPERATIONAL ENVIRONMENTAL SATELLITE

## GOES-NOPQ SOUNDER

Approved by:

| | |
|---|---|
| Author | 8/14/97 Date |
| System Engineering | 8-14-97 Date |
| Project Engineering | 8/14/97 Date |
| NASA/GSFC GOES-NQ Spacecraft CCB Chair | Date |
| NASA/GSFC GOES Project Manager | 8/18/97 Date |

# CHANGE RECORD

| Revision | Date | Reasons/Descriptions of Changes | Affected Page(s) |
|---|---|---|---|
| - | 7/9/97 | Initial Document Release | |
| A | 8/14/97 | Added Power Dissipation Paragraph (3.3.3) | 24 |
| A | 8/14/97 | Modified Load Equations to reflect Baseplate Modifications - material change and stiffening (5.3.2.4) | 106 |
| A | 8/14/97 | Modified Instrument envelope dimensions to include Louver Sunshade (Table 3.1.2-1) | 7 |
| A | 8/14/97 | Modified Allowable Sinusoidal Angular Disturbances (Figure 3.2.4-1) | 16 |
| A | 8/14/97 | Corrected Wire List for connector 2A8J2 | 134 |
| A | 8/14/97 | Corrected Wire List for connector 2A8J19 | 150 |
| A | 8/14/97 | Modified Interface Control Drawings to include latest review updates:<br>Extended envelope to include sunshade<br>Added lift tube installation guide<br>Added ± y scan angle | Pages after para 5.5 |
| | | | |
| | | | |
| | | | |
| | | | |
| | | | |
| | | | |
| | | | |
| | | | |
| | | | |
| | | | |
| | | | |
| | | | |
| | | | |
| | | | |
| | | | |
| | | | |
| | | | |
| | | | |
| | | | |
| | | | |

# TABLE OF CONTENTS

1. SCOPE ..... 1

2. APPLICABLE DOCUMENTS ..... 1

2.1 U.S. Government Documents ..... 1

2.2 ITT Documents ..... 1

2.3 Other Documents ..... 1

2.4 Terminology ..... 2

2.4.1 Acronyms and Abbreviations ..... 2

3. INTERFACE REQUIREMENTS ..... 5

3.1 General ..... 5

3.1.1 Configuration ..... 5

3.1.2 Dimensions ..... 7

3.1.3 Launch Vehicle Compatibility ..... 7

3.1.4 Furnished Equipment ..... 7

3.2 Mechanical ..... 8

3.2.1 Mass Properties ..... 8

3.2.1.1 Weight ..... 8

3.2.1.2 Moment of Inertia ..... 8

3.2.1.3 Center of Gravity ..... 8

3.2.2 Mounting and Alignment ..... 9

3.2.2.1 Sensor Module ..... 10

3.2.2.2 Electronics Module and Power Supply Module ..... 11

3.2.3 Fields of View ..... 11

3.2.3.1 Optical Port FOV ..... 11

3.2.3.2 Radiant Cooler FOV ..... 12

3.2.3.3 Radiant Cooler Cover Unobstructed Zone ..... 14

3.2.3.4 Louvers FOV ..... 14

3.2.3.5 Filter Wheel Cooler Field of View ..... 14

3.2.3.6 Pre-Launch Cleaning Access ..... 14

3.2.3.7 Potentially Hazardous Solar Intrusions into FOVs ..... 15

3.2.4 Mechanical Disturbances ..... 15

3.2.4.1 Spacecraft to Instrument Disturbances ..... 15

3.2.4.2 Instrument to Spacecraft Disturbances ..... 16

3.2.5 Mechanical Handling ..... 19

3.3 Thermal ..... 20
3.3.1 Allowable Temperatures ..... 20
3.3.2 Instrument Thermal Control Design ..... 21
3.3.2.1 Thermal Coatings and Properties ..... 21
3.3.2.2 Thermal Blankets ..... 22
3.3.2.3 Sunshields ..... 22
3.3.2.4 Louvers ..... 22
3.3.2.5 Radiant Cooler ..... 22
3.3.2.6 Heaters ..... 23
3.3.2.6.1 Baseplate Heaters ..... 23
3.3.2.6.2 Cooler Patch Control Heater ..... 23
3.3.2.6.3 Cooler Outgas Heater ..... 23
3.3.2.6.4 Spacecraft-Controlled Anti-Contamination Backup Heater ..... 23
3.3.2.6.5 Filter Wheel Control Heater ..... 24
3.3.2.6.6 Filter Wheel Outgas Heater ..... 24
3.3.3 Power Dissipation ..... 24
3.4 Electrical ..... 25
3.4.1 General ..... 25
3.4.1.1 Grounding ..... 25
3.4.1.2 Instrument Module Connectors ..... 26
3.4.1.3 Instrument Module Harness Interconnects ..... 28
3.4.1.4 Test Connectors ..... 30
3.4.2 Power ..... 32
3.4.2.1 DC Voltage ..... 33
3.4.2.2 Voltage Transients ..... 34
3.4.2.3 Instrument Power Consumption ..... 34
3.4.2.3.1 Steady-State BOL Power ..... 34
3.4.2.3.2 Transient Currents ..... 35
3.4.3 Electromagnetic Compatibility (EMC) ..... 36
3.4.3.1 Steady-State CE of Power Line ..... 36
3.4.3.2 CE of Selected Signal Lines ..... 37
3.4.3.3 Steady-State CS of Power Line ..... 38
3.4.3.4 CS of Selected Signal Lines ..... 38
3.4.3.5 Common Mode Voltage Noise ..... 39
3.4.3.6 Radiated Emissions of Instrument (RE) ..... 39
3.4.3.7 Radiated Susceptibility of Instrument (RS) ..... 40
3.4.3.8 Electrostatic Arc-Discharge Susceptibility (ESDS) ..... 41
3.4.3.9 Magnetic Field Emissions ..... 42

3.4.3.10 Bonding and Grounding ..... 42
3.5 Command and Data Handling ..... 43
3.5.1 Commands ..... 43
3.5.1.1 Bi-Level Command (Electronics ON/OFF) ..... 43
3.5.1.2 Pulse Commands ..... 44
3.5.1.2.1 Pulse Command Signal Characteristics ..... 47
3.5.1.3 Proportional Commands ..... 47
3.5.1.3.1 Proportional Command "Data" Signal Characteristics ..... 49
3.5.1.3.2 Proportional Command "Data Ready" Signal Characteristics ..... 49
3.5.1.3.3 Proportional Command "Data Strobe" Signal Characteristics ..... 50
3.5.1.3.4 Proportional Command Format ..... 51
3.5.1.4 Electroexplosive Device (EED) Command ..... 52
3.5.2 Telemetry ..... 53
3.5.2.1 Bi-Level Telemetry Outputs ..... 54
3.5.2.1.1 Relay and Switch Bi-Level Telemetry Signal Characteristics ..... 57
3.5.2.1.2 Transistor Bi-Level Telemetry Signal Characteristics ..... 58
3.5.2.2 Analog Telemetry ..... 58
3.5.2.2.1 Analog Telemetry Signal Characteristics ..... 61
3.5.2.3 Servo Error Telemetry (to Multi-use Data Link) ..... 62
3.5.2.3.1 Servo Error Telemetry Signal Characteristics ..... 64
3.5.3 Wideband Data (Science Data) ..... 64
3.5.3.1 Wideband Data Signal Characteristics ..... 64
3.5.3.2 3.5.3 Wideband Data Format ..... 65
3.5.3.3 Wideband Status Telemetry Content ..... 66
3.5.3.4 Wideband Housekeeping Telemetry Content ..... 67
3.5.3.5 Wideband Data Sample to Scan Coordinates Alignment Definition ..... 69
3.5.4 Image Navigation and Registration (INR) Interface ..... 70
3.5.4.1 Spacecraft Attitude Data ..... 71
3.5.4.1.1 Spacecraft Attitude "Timing Gate" Signal Characteristics ..... 72
3.5.4.1.2 Spacecraft Attitude "Clock" Signal Characteristics ..... 73
3.5.4.1.3 Spacecraft Attitude "Data" Signal Characteristics ..... 74
3.5.4.2 Image Motion Compensation (IMC) ..... 74
3.5.4.2.1 Analog IMC Signal Characteristics ..... 76
3.5.4.2.2 Bi-Level IMC Source Select Signal Characteristics ..... 77
3.5.4.3 Mirror Position ..... 78
3.5.4.3.1 Mirror Position "Data Request" Signal Characteristics ..... 79
3.5.4.3.2 Mirror Position "Data Strobe" Signal Characteristics ..... 80
3.5.4.3.3 Mirror Position "Data" Signal Characteristics ..... 81

3.5.4.3.4 Mirror Position Format ..... 81
3.5.4.4 Scan Status ..... 82
3.5.5 Spacecraft Controlled Relays ..... 85
3.5.5.1 Anti-Contamination Backup Heater ..... 86
3.5.5.2 Scan Motor Overload Disable ..... 87
3.6 Contamination Control ..... 88
3.6.1 Ground Processing ..... 88
3.6.1.1 Protective Covers ..... 88
3.6.1.2 Facility Requirements ..... 88
3.6.1.3 Equipment Requirements ..... 88
3.6.1.4 Purge Requirements ..... 89
3.6.1.5 Ground Storage Requirements ..... 89
3.6.2 Spacecraft Contamination of Instrument ..... 89
3.6.2.1 Spacecraft and Mission Design Requirements ..... 89
3.6.2.2 Particulate Contamination ..... 90
3.6.2.3 Molecular Contamination ..... 90
3.7 Shielding from Radiation Environment (TBR) ..... 90
4. NOTES ..... 91
4.1 Glossary ..... 91
5. APPENDICES ..... 92
5.1 NOPQ Sounder Digital Output Data Format ..... 93
5.1.1 Wideband (Science) Data Format ..... 93
5.1.2 A/D Word Format ..... 100
5.1.3 Scan Control Status Word Definitions ..... 100
5.1.4 Scan Control Status Word Layout ..... 103
5.2 Equipment Furnished ..... 104
5.2.1 Agencies Responsible for Furnishing Specified Equipment ..... 104
5.3 Environmental Design Requirements ..... 105
5.3.1 General ..... 105
5.3.2 Mechanical Environments ..... 105
5.3.2.1 Relative Humidity ..... 105
5.3.2.2 Barometric Pressure ..... 105
5.3.2.3 Temperature ..... 105
5.3.2.4 Structural Loads ..... 105
5.4 Instrument Wire List / Pin Assignments ..... 117

# LIST OF TABLES

Table 2.4.1-1 List of Acronyms and Abbreviations ..... 2
Table 3.1.2-1 Sounder Instrument Envelope Dimensions ..... 7
Table 3.2.1-1 Sounder Nominal Mass Properties ..... 9
Table 3.2.2-1 Maximum Allowable Forces and Moments ..... 10
Table 3.3.1-1 Sounder Temperatures (°C) ..... 20
Table 3.3.2-1 Properties of Thermal Coatings ..... 21
Table 3.4.1-1 Instrument Module Connectors ..... 27
Table 3.4.1-2 Instrument External Harness Cable Lengths ..... 29
Table 3.4.2-1 Instrument Power Input Fuse Requirements ..... 33
Table 3.4.2-2 Instrument Power DC Voltage ..... 33
Table 3.4.2-3 Instrument Power Voltage Transients ..... 34
Table 3.4.2-4 Maximum Steady-State BOL Power (@Vin=42V) ..... 35
Table 3.4.2-5 Transient Currents ..... 35
Table 3.4.3-1 CE of Selected Signal Lines ..... 37
Table 3.4.3-2 CS of Selected Signal Line ..... 39
Table 3.4.3-3 Common Mode Voltage Noise ..... 39
Table 3.4.3-4 Radiated Emissions of Instrument (RE) ..... 40
Table 3.4.3-5 RS Test Frequencies and Field Strengths ..... 41
Table 3.4.3-6 ESDS Characteristics ..... 41
Table 3.5.1-1 Pulse Command List ..... 45
Table 3.5.1-2 Pulse Command Signal Characteristics ..... 47
Table 3.5.1-3 Proportional Command "Data" Signal Characteristics ..... 49
Table 3.5.1-4 Proportional Command "Data Ready" Signal Characteristics ..... 50
Table 3.5.1-5 Proportional Command "Data Strobe" Signal Characteristics ..... 50
Table 3.5.1-6 Proportional Command Content ..... 52
Table 3.5.2-1 Bi-Level Telemetry Output ..... 55
Table 3.5.2-2 Relay and Switch Bi-Level Telemetry Signal Characteristics ..... 57
Table 3.5.2-3 Transistor Bi-Level Telemetry Signal Characteristics ..... 58
Table 3.5.2-4 Analog Telemetry ..... 59
Table 3.5.2-5 Analog Telemetry Signals Characteristics ..... 61
Table 3.5.2-6 Servo Error ..... 62
Table 3.5.2-7 Servo Error Telemetry Characteristics ..... 64
Table 3.5.3-1 Wideband Data Interface and Signal Characteristics ..... 65
Table 3.5.3-2 Data Block Summary ..... 65
Table 3.5.3-3 Wideband Status Telemetry ..... 66
Table 3.5.3-4 Wideband Housekeeping Telemetry ..... 67

Table 3.5.4-1 Spacecraft Attitude "Timing Gate" Signal Characteristics....72
Table 3.5.4-2 Spacecraft Attitude "Clock" Signal Characteristics....73
Table 3.5.4-3 Spacecraft Attitude "Data" Signal Characteristics....74
Table 3.5.4-4 Analog IMC Signal Characteristics....76
Table 3.5.4-5 Bi-Level IMC Source Select Signal Characteristics....77
Table 3.5.4-6 Mirror Position "Data Request" Signal Characteristics....79
Table 3.5.4-7 Mirror Position "Data Strobe" Signal Characteristics....80
Table 3.5.4-8 Mirror Position "Data" Signal Characteristics....81
Table 3.5.4-9 Cycle & Increment Equivalent Angles....82
Table 3.5.4-10 Scan Status Signal Characteristics....84
Table 5.1.1-1 Wideband Data Format....93
Table 5.1.2-1 A/D Word Format....100
Table 5.1.3-1 Scan Control Status Word Definitions....100
Table 5.1.4-1 Scan Control Status Word Layout....103
Table 5.2.1-1 Equipment Furnished by Specified Agencies....104
Table 5.3.2-1 Environment Requirements Summary....107
Table 5.3.2-2 Tolerance on Test Conditions....108
Table 5.3.2-3 Allowable Sounder Random Vibration Inputs from the Spacecraft (Acceptance)....109
Table 5.3.2-4 Allowable Sounder Sine Vibration Inputs from the Spacecraft (Acceptance)....112
Table 5.3.2-5 Allowable Sounder Shock Response Inputs from the Spacecraft (Qualification and Acceptance)....115
Table 5.3.2-6 Acoustic Environment....116

# LIST OF FIGURES

Figure 3.1.1-1 Sounder Modules ..... 6
Figure 3.2.3-1 Optical Port and Louver FOVs ..... 12
3.2.3-2 Radiant Cooler FOV ..... 13
Figure 3.2.4-1 Envelope of Maximum Sinusoidal Disturbances ..... 16
Figure 3.2.4-2 Sounder Scan Mechanism Torque Disturbances Transmitted to Spacecraft through Instrument Baseplate ..... 18
Figure 3.2.4-3 Sounder Scan Mirror N/S Position vs. Time During a Black Body Calibration ..... 19
Figure 3.4.1-1 Electrical Interface ..... 25
Figure 3.4.1-2 Grounding ..... 26
Figure 3.4.1-3 Instrument Module Harness Interconnects ..... 29
Figure 3.4.1-4 Test Connector Interface ..... 30
Figure 3.4.2-1 Instrument Power Input Interface ..... 32
Figure 3.4.3-1 Steady-State CE of Power Line ..... 36
Figure 3.4.3-2 Steady-State CS of Power Line ..... 38
Figure 3.5.1-1 Command Interface ..... 43
Figure 3.5.1-2 Bi-Level Command Schematic ..... 44
Figure 3.5.1-3 Pulse Command Schematic ..... 44
Figure 3.5.1-4 Proportional Command Schematic ..... 48
Figure 3.5.1-5 Proportional Command Timing Diagram ..... 49
Figure 3.5.1-6 Proportional Command Format ..... 51
Figure 3.5.1-7 EED Command Schematic ..... 53
Figure 3.5.2-1 Telemetry Interface ..... 53
Figure 3.5.2-2 Relay and Switch Bi-Level Telemetry Schematic ..... 54
Figure 3.5.2-3 Transistor Bi-Level Telemetry Schematic ..... 54
Figure 3.5.2-4 Analog Telemetry Schematic ..... 58
Figure 3.5.2-5 Servo Error Telemetry Schematic ..... 62
Figure 3.5.3-1 Wideband Data Interface ..... 64
Figure 3.5.3-2 Wideband Data Processing ..... 64
Figure 3.5.3-3 Wideband Data Schematic ..... 64
Figure 3.5.3-4 Scan Pattern ..... 69
Figure 3.5.4-1 Image Navigation and Registration (INR) Interface ..... 70
Figure 3.5.4-2 Spacecraft Attitude Data Schematic ..... 71
Figure 3.5.4-3 Attitude Data Timing Diagram ..... 72
Figure 3.5.4-4 IMC Schematic ..... 75
Figure 3.5.4-5 Mirror Position Schematic ..... 78
Figure 3.5.4-6 Mirror Position Timing Diagram ..... 79

Figure 3.5.4-7 Bit Pattern of Mirror Position ..... 81
Figure 3.5.4-8 Scan Status Interface ..... 83
Figure 3.5.5-1 Spacecraft Controlled Operations Interface ..... 85
Figure 3.5.5-2 Anti-Contamination Backup Heater ..... 86
Figure 3.5.5-3 Scan Motor Overload Disable ..... 87
Figure 5.3.2-1 Allowable Sensor Module Random Vibration Level Inputs from the Spacecraft ..... 110
Figure 5.3.2-2 Allowable Electronics Module Random Vibration Level Inputs from the Spacecraft ..... 110
Figure 5.3.2-3 Allowable Power Supply Module Random Vibration Level Inputs from the Spacecraft ..... 111
Figure 5.3.2-4 Allowable Sensor Module Sine Vibration Inputs from the Spacecraft (X-axis) ..... 113
Figure 5.3.2-5 Allowable Sensor Module Sine Vibration Inputs from the Spacecraft (Y-axis) ..... 113
Figure 5.3.2-6 Allowable Sensor Module Sine Vibration Inputs from the Spacecraft (Z-axis) ..... 114
Figure 5.3.2-7 Allowable Electronics and Power Supply Module Sine Vibration Inputs from the Spacecraft (all axes) ..... 114
Figure 5.3.2-8 Allowable Sensor, Electronics and Power Supply Module Shock Response Spectrum from the Spacecraft ..... 115

## 1. SCOPE

This document along with the Interface Control Drawings, 8175756 for the Sounder Sensor Module, 8175757 for the Electronics Module, and 8175758 for the Power Supply Module, detail the mechanical, thermal, electrical and optical interfaces between the NO/PQ Sounder Instrument and the Spacecraft onto which it is mounted. All references to "instrument" in this document imply the GOES NOPQ Sounder Instrument.

## 2. APPLICABLE DOCUMENTS

The following documents shall apply to the extent referenced herein. Unless otherwise specified the latest revision of each of these documents shall apply.

### 2.1 U.S. Government Documents

| | |
|---|---|
| MIL-STD-461 Notice 1 | Electromagnetic Emission and Susceptibility Requirements for Control of Electromagnetic Interference |
| MIL-STD-462 Notice 1 | Electromagnetic Interference Characteristics, Measurement of |
| MIL-STD-1541 | Electromagnetic Compatibility Requirements for Space Systems |
| MIL-B-5087 | Bonding, Electrical, and Lightning Protection for Aerospace Systems |
| GSFC X-900-93-03 | Charged Radiation Exposure of Geostationary Orbits |
| FED-STD-209E | Airborne Particulate Cleanliness in Cleanrooms and Clean Zones |
| MIL-P-27401C | Propellant, Nitrogen: Liquid and Gas |
| GSFC S-415-29 | Launch Site Purge Plan for GOES |

### 2.2 ITT Documents

| | |
|---|---|
| 8175750 | NOPQ Sounder Instrument Design Specification |
| 8175756 | Module, Sounder Sensor Interface Control Drawing |
| 8175757 | Module, Sounder Electronics Interface Control Drawing |
| 8175758 | Module, Sounder Power Supply Interface Control Drawing |
| 8175748 | Maximum Allowable Instrument Radiation Dose Levels |
| 8175770 | Sounder Operations Handbook |

### 2.3 Other Documents

| | |
|---|---|
| ASTM E 595-93 | Standard Method for Total Mass Loss and Collected Volatile Condensable Materials for Outgassing in a Vacuum Environment |

## 2.4 Terminology

### 2.4.1 Acronyms and Abbreviations

**Table 2.4.1-1 List of Acronyms and Abbreviations**

| Acronym | Description |
|---|---|
| Å | Angstrom |
| α | absorptivity |
| ε | emissivity |
| Δ | delta (increment or decrement) |
| °C | degrees centigrade |
| °K | degrees Kelvin |
| A/D | analog-to-digital |
| BB-Cal | blackbody calibration |
| BOL | beginning of life |
| BRM | bit rate multiplier |
| CE | conducted emissions |
| CEI | coherent error integrator |
| CG | center of gravity |
| CH (Ch) | channel |
| CS | conducted susceptibility |
| CU | command unit |
| CVCM | collected volatile condensable material |
| DAC | digital-to-analog converter |
| DBID | data block identifiers |
| DC | direct current |
| dec | decade |
| EED | electroexplosive device |
| E-Cal | electronics calibration |
| EM | Electronics Module |
| EMC | electromagnetic compatibility |
| EOL | end of life |
| ESD | electrostatic discharge |
| ESDS | electrostatic discharge susceptibility |
| EW (E-W) | East-West |
| FOV | field of view |
| ft | feet |
| Freq, freq | frequency |
| GFE | government furnished equipment |
| GOES | Geostationary Operational Environmental Satellite |
| GOES NOPQ | GOES follow-on satellites to GOES I-M |
| Grms | G = acceleration due to gravity, rms = root mean square |

| Acronym | Description |
|---|---|
| GSE | ground support equipment |
| GSFC | Goddard Space Flight Center |
| Hz | Hertz or cycles per second |
| ICD | Interface Control Document |
| ICD | Interface Control Drawing |
| IFOV | instantaneous field of view |
| IGFOV | instantaneous geometric field of view |
| IMC | image motion compensation |
| in | inches |
| INR | image navigation and registration |
| IR | infrared |
| ITT | ITT Aerospace/Communications Division, ITT Defense & Electronics |
| kg | kilogram(s) |
| lb | pounds(s) |
| $lb_f$ | pound(s) force |
| LOS | line of sight |
| MDL | multi-use data link |
| mg | milligram |
| mG | milliG (G = acceleration due to gravity, 32 ft /sec$^2$ or 9.8 meters/sec$^2$ ) |
| MLI | multilayer insulation |
| µm | micron or micrometer |
| µR | microradians |
| NASA | National Aeronautics and Space Administration |
| NOPQ | see GOES NOPQ |
| NRZ-L | no return to zero - level |
| NRZ-S | no return to zero - space |
| NS (N-S) | North-South |
| oct | octave |
| OR | logical OR |
| OSR | optical solar reflector |
| oz | ounces |
| PAC | percent area coverage |
| PN | pseudonoise |
| ppm | parts per million |
| PROM | programmable read-only memory |
| PSM | Power Supply Module |
| RE | radiated emissions |
| RF | radio frequency |
| RPM | revolutions per minute |
| RMS, rms | root mean square |
| RS | radiated susceptibility |
| RSS | root sum squared |
| SCFM | standard cubic feet per hour |
| SC, s/c | spacecraft |
| SE | servo error |

| Acronym | Description |
|---|---|
| SM | Sensor Module |
| S/Sys | subsystem |
| Tgt | target |
| Tlmy | telemetry |
| TML | total mass loss |
| TBD | to be determined |
| TBR | to be reviewed |
| TBS | to be supplied by NASA |
| TES | test execution system |
| TLM | telemetry |
| torr | 1 mm of Hg (mercury) pressure |
| TTL | transistor-transistor logic |
| VCHS | visibly-clean, highly-sensitive |
| Vdc | volts dc |
| Vin | instrument power input voltage |
| Vis | visible |

# 3. INTERFACE REQUIREMENTS

## 3.1 General

### 3.1.1 Configuration

The Sounder is a 19 discrete spectral channel, filter wheel, radiometer using a two-axis scanning mirror designed to provide variable area soundings of the Earth's atmosphere. Radiometric quality, simultaneous data collection and scan flexibility are prime requirements of this Sounder instrument. The Sounder collects data as a part of a three axis body stabilized satellite in synchronous orbit. The Sounder requires primary power, image motion compensation signals and decoded command input data from the spacecraft. Sounder output data is a continuous data stream containing unaltered sensor information and other telemetry data.

The Sounder consists of an optical system, scanner, radiative cooler and directly related electronics housed in a Sensor Module with all power, command, control, telemetry and data processing circuitry housed in either an Electronics module or a Power Supply Module. The Sensor Module shall be mounted external to the spacecraft body; the Electronics Module and Power Supply Module can be mounted either external or internal to the spacecraft body.

Figure 3.1.1-1 illustrates the three modules (excluding thermal blankets and harnesses). The radiant cooler and the filter wheel cooler fields of view are shown northward, perpendicular to the orbit plane. However, the sensor module can be mounted such that the radiant cooler and the filter wheel cooler have a southward view. A southward view is equivalent to a northward view with respect to thermal and mechanical design considerations. This change, however, will require ground system and operational modifications which are the responsibility of the spacecraft contractor. Similarly, the orientations of the Electronics and Power Supply modules may be changed as long as the mechanical and radiation requirements contained herein are satisfied. Unless otherwise specified, the coordinate system used in this document is as defined in Figure 3.1.1-1. The orientation of the Electronics and Power Supply Modules may be arbitrary and are shown here in order to clarify the dimensional data in paragraph 3.1.2.

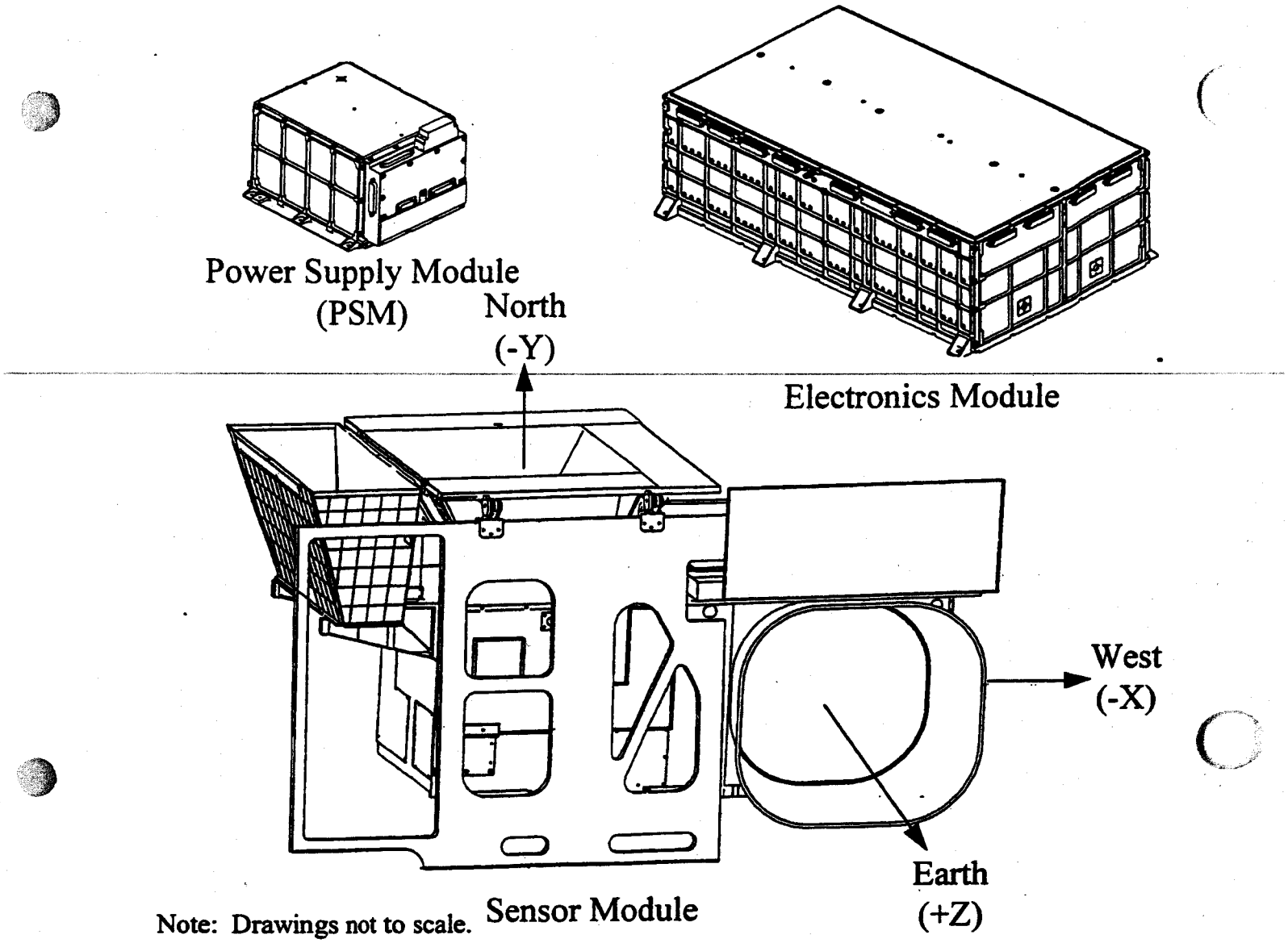


**Figure 3.1.1-1 Sounder Modules**

### 3.1.2 Dimensions

The Sounder dimensions shall conform to those shown in the Interface Control Drawings 8175756 for the Sensor Module, 8175757 for the Electronics Module and 8175758 for the Power Supply Module. Overall envelope dimensions are shown in Table 3.1.2-1. Coordinates are as shown in Figure 3.1.1-1.

**Table 3.1.2-1 Sounder Instrument Envelope Dimensions**

| | Dimension (inches) | | |
|---|---|---|---|
| **Axis** | **Sensor Module** | **Electronics Module** | **Power Supply Module** |
| **X** | 59.00 | 17.00 | 9.48 |
| **Y** | 30.47 | 8.00 | 6.15 |
| **Z** | 31.74 | 26.33 | 10.99 |

### 3.1.3 Launch Vehicle Compatibility

The Sounder shall be compatible with an expendable launch vehicle to the extent specified in Appendix 5.3 of this document. Orientation of the Sounder at launch shall be such that the launch loads applied to each axis do not exceed the allowable levels shown in Appendix 5.3.

### 3.1.4 Furnished Equipment

Equipment necessary to handle, test, and integrate the Sounder with the spacecraft is given in Appendix 5.2. The agency responsible for supplying each item is also given.

## 3.2 Mechanical

### 3.2.1 Mass Properties

The typical weight, moment of inertia, and center of gravity for each of the three modules (with tolerances) shall be as shown in Table 3.2.1-1. The actual values for these parameters shall be supplied by ITT in the final data packages upon completion of the mass properties measurements for each specific instrument. Final data packages will be delivered with each Sounder.

#### 3.2.1.1 Weight

The nominal weights and tolerances of the Sensor Module, Electronics Module and Power Supply Module are shown in Table 3.2.1-1, exclusive of thermal blankets, interconnect cables, and additional radiation shielding.

#### 3.2.1.2 Moment of Inertia

The moments of inertia are calculated for two mission configurations. These include the "stowed" configuration, in which the cooler cover on the Sensor Module is closed, and the "deployed" configuration, in which the cooler cover on the Sensor Module is open. The calculated moments of inertia for the Sensor Assembly, Electronics Module and Power Supply Module, based upon the nominal weights and center of gravity locations, shall be as shown in Table 3.2.1-1.

#### 3.2.1.3 Center of Gravity

The nominal center of gravity locations for the Sensor Module, Electronics Module, and Power Supply Module shall be as shown in Table 3.2.1-1. The Sensor Module center of gravity locations are also measured for the two mission configurations (stowed and deployed), described in paragraph 3.2.1.2. All dimensions are with respect to the 0-0 mounting feet shown in the interface control drawings (8175756, 8175757 and 8175758).

**Table 3.2.1-1 Sounder Nominal Mass Properties**

| | Tolerances | Units | Sensor Module | Electronics Module | Power Supply Module |
|---|---|---|---|---|---|
| **Weight *†** | ± 6.61/2.20/0.55 | lb. | 221.15 | 57.49 | 13.45 |
| **Stowed x-axis C.G.** | ± 0.25 | in | +23.19 | -8.04 | -4.34 |
| **Stowed y-axis C.G.** | ± 0.25 | in | -10.56 | +3.57 | +2.96 |
| **Stowed z-axis C.G.** | ± 0.25 | in | +9.79 | +12.15 | -5.17 |
| **Stowed $I_x$ ‡** | ± 5 % | lb-in$^2$ | 15792 | 3604.7 | 156.1 |
| **Stowed $I_y$ ‡** | ± 5 % | lb-in$^2$ | 45782 | 4432.0 | 177.2 |
| **Stowed $I_z$ ‡** | ± 5 % | lb-in$^2$ | 47232 | 1341.3 | 97.4 |
| **Deployed x-axis C.G.** | ± 0.25 | in | +23.19 | | |
| **Deployed y-axis C.G.** | ± 0.25 | in | -10.37 | | |
| **Deployed z-axis C.G.** | ± 0.25 | in | +9.96 | | |
| **Deployed $I_x$ ‡** | ± 5 % | lb-in$^2$ | 15510 | | |
| **Deployed $I_y$ ‡** | ± 5 % | lb-in$^2$ | 46609 | | |
| **Deployed $I_z$ ‡** | ± 5 % | lb-in$^2$ | 46392 | | |

* Includes 0.28 lb increase from the following Design Modification Changes (Solar Intrusion, Baseplate Heater, Obsolete Components, Electropolishing and Vacuum Housing). Includes approximately 6.60 lb (not to exceed 10 lbs) increase expected from NE panel Design Modification.

† Does not include additional radiation shielding that may be required to replace spacecraft shielding.

‡ Calculated about the nominal Center of Gravity

### 3.2.2 Mounting and Alignment

In selecting the relative locations of the Sensor Module, Electronics Module, and the Power Supply Module of the Sounder instrument, the satellite contractor shall consider the location of the connectors (as shown in the respective Interface Control Drawings (8175756, 8175757 and 8175758)) with relationship to the harness supplied by the satellite contractor. See paragraph 3.4.1.3 for the maximum allowable cable lengths to minimize line losses.

All fasteners and external interfaces shall be per the applicable Interface Control Drawings.

Mounting shall not interfere with fields of view per paragraph 3.2.3 and shall not block instrument vent holes.

3.2.2.1 Sensor Module

The Sounder Sensor Module shall be attached to the spacecraft by six pads. Interface mounting holes for these six pads shall be located using a drill template. ITT shall provide the matched tooling plates and associated drawings to the spacecraft vendor for tolerancing. Three of the six mounting pads (the primary pads) shall be used to define the plane of the mounting surface and the alignment reference axes, as defined in the Interface Control Drawing (8175756). The three spacecraft primary mounting feet shall be flat within ±0.001 inches without shimming at the interface. The other three pads (the secondary pads) shall be used for mechanical support. The spacecraft vendor shall bolt and torque the primary feet to the spacecraft interface. The secondary feet shall be shimmed to match the baseline gap (defined at ITT and supplied to the spacecraft vendor) within ±0.001 inches.

Because the Sensor Module contains sensitive and precisely aligned optical components, expansion and contraction forces affect instrument alignment and performance. Therefore, the spacecraft mounting panel shall be compatible with the aluminum Imager baseplate such that large thermal forces, generated at the mounting interface do not distort the mounting interface. The spacecraft mounting plane shall remain flat (i.e. not distorted) within ±0.005 inches over the instrument footprint under all expected on-orbit structural loads and over the mission allowable temperature range. The allowable lateral forces and moments (about the axial and lateral directions) at each of the six Sensor Module mounting feet during on-orbit operation (due to thermal expansion) shall be less than the values shown in Table 3.2.2-1.

**Table 3.2.2-1 Maximum Allowable Forces and Moments**

| Direction | Value (max) |
|---|---|
| Lateral Direction (X, Y) | 50 $lb_f$ |
| Moment about Lateral Direction (Z) | 75 in - $lb_f$ |
| Moment about Axial Direction (X,Y) | 75 in - $lb_f$ |

Note: These forces may be applied simultaneously.

The Sounder shall have an alignment cube (provided by ITT) to enable the alignment of the Sensor Assembly to the satellite. ITT shall also provide the relationship between the instrument optical axis and the alignment cube. The alignment cube shall be referenced to the primary mounting surface and hole pattern of the instrument. The alignment cube shall be mounted on a fixed surface on the baseplate of the Sensor Assembly. The Earth face (+z) and the -y face of the alignment cube must be visible when mounted on the spacecraft (coordinates reflect mounting scheme shown in Figure 3.1.1-1). The exact location of the alignment cube shall be identified on the Sensor Module Interface Control Drawing (8175756).

Spacecraft mounting panel feet shall be at least as large as the baseplate feet (refer to 8175756). Sufficient clamp load must be used to keep the feet in contact with the spacecraft panel.

#### 3.2.2.2 Electronics Module and Power Supply Module

The interfaces between the satellite and the Electronics Module and Power Supply Module are described on their respective Interface Control Drawings. Match tooling shall be used to locate the mounting points to the spacecraft. The spacecraft mounting panel(s) in contact with these modules shall remain flat to within ±0.015 inches when exposed to on-orbit thermal conditions. The Electronics Module and Power Supply Module do not have specific alignment requirements.

### 3.2.3 Fields of View

The fields of view shall be as defined in the Sensor Module Interface Control Drawing (8175756). Unless otherwise noted, these fields of view are with respect to normal Geostationary orbit operations.

#### 3.2.3.1 Optical Port FOV

The spacecraft design shall provide the Sounder an unobstructed Optical Port field of view within a conical 65 degrees half angle of optical nadir to prevent collection of scattered energy as shown in Figure 3.2.3-1. Further details are shown in the Interface Control Drawing (8175756).

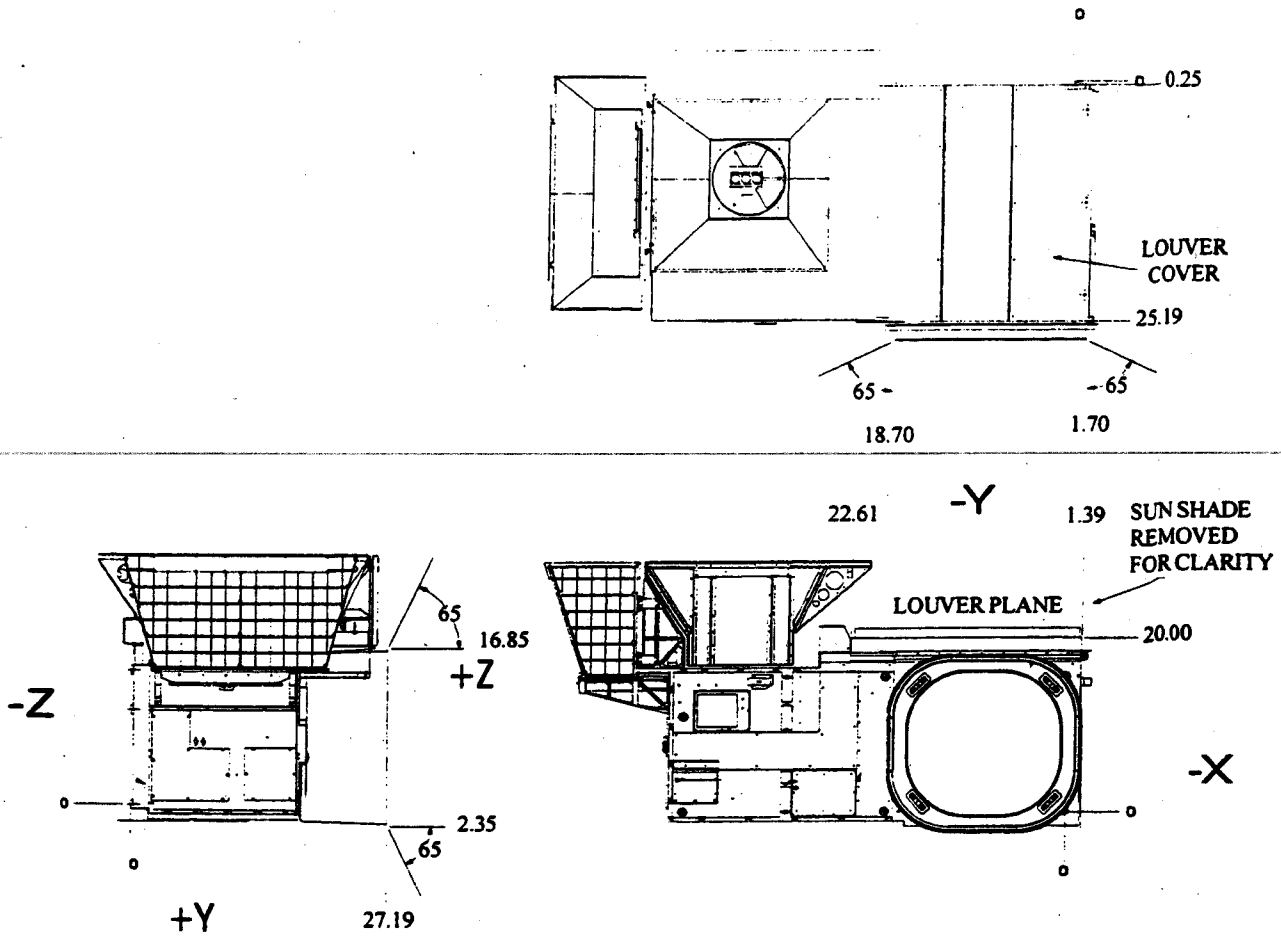


**Figure 3.2.3-1 Optical Port and Louver FOVs**

3.2.3.2 Radiant Cooler FOV

To properly cool the IR detectors to their cryogenic operating temperatures, the radiant cooler shall be located with a field of view perpendicular to the orbital plane as shown in the Sensor Module Interface Control Drawing (8175756). The radiant cooler must have a minimally obstructed hemi-spherical FOV to the north (-y). In order to maintain the IR detectors at the required temperature (as detailed in the NOPQ Sounder Instrument Design Specification - 8175750), the thermal input onto the radiant cooler surfaces from the spacecraft must be minimized and controlled. Incident thermal and reflected solar energy from any spacecraft appendage that intercepts the north face (refer to 3.2.3-2) shall meet the requirements specified below. The requirements apply to incident angles from 0° to 25° and angles above 25°. At elevations between 0° and 25°, the diurnal average incident power per unit projected area of the cooler from spacecraft appendages shall satisfy the following equations:

a. at BOL

$$(0.437 * I_{IR}) + (0.094 * I_{RS}) \leq 2.68 \times 10^{-4} W / cm^2$$

b. at EOL

$$(0.437 * I_{IR}) + (0.147 * I_{RS}) \leq 3.76 \times 10^{-4} W / cm^2$$

where:

$I_{IR}$ = Incident infrared ($W/cm^2$)

$I_{RS}$ = Incident reflected solar ($W/cm^2$)

For elevation angles between 25° and 90°, the peak incident power per unit area from spacecraft appendages shall not exceed $1.19 \times 10^{-4}$ $W/cm^2$. Any spacecraft appendages with elevation angles greater than 25° shall be restricted to 0° to 90° azimuth as shown in 3.2.3-2. All coordinates in 3.2.3-2 are with respect to the 0-0 mounting foot on the baseplate.

To minimize the reflected solar loading on the radiant cooler shrouds, any adjacent spacecraft radiator panel shall be thermal blanketed to prevent/preclude a specular solar reflection.

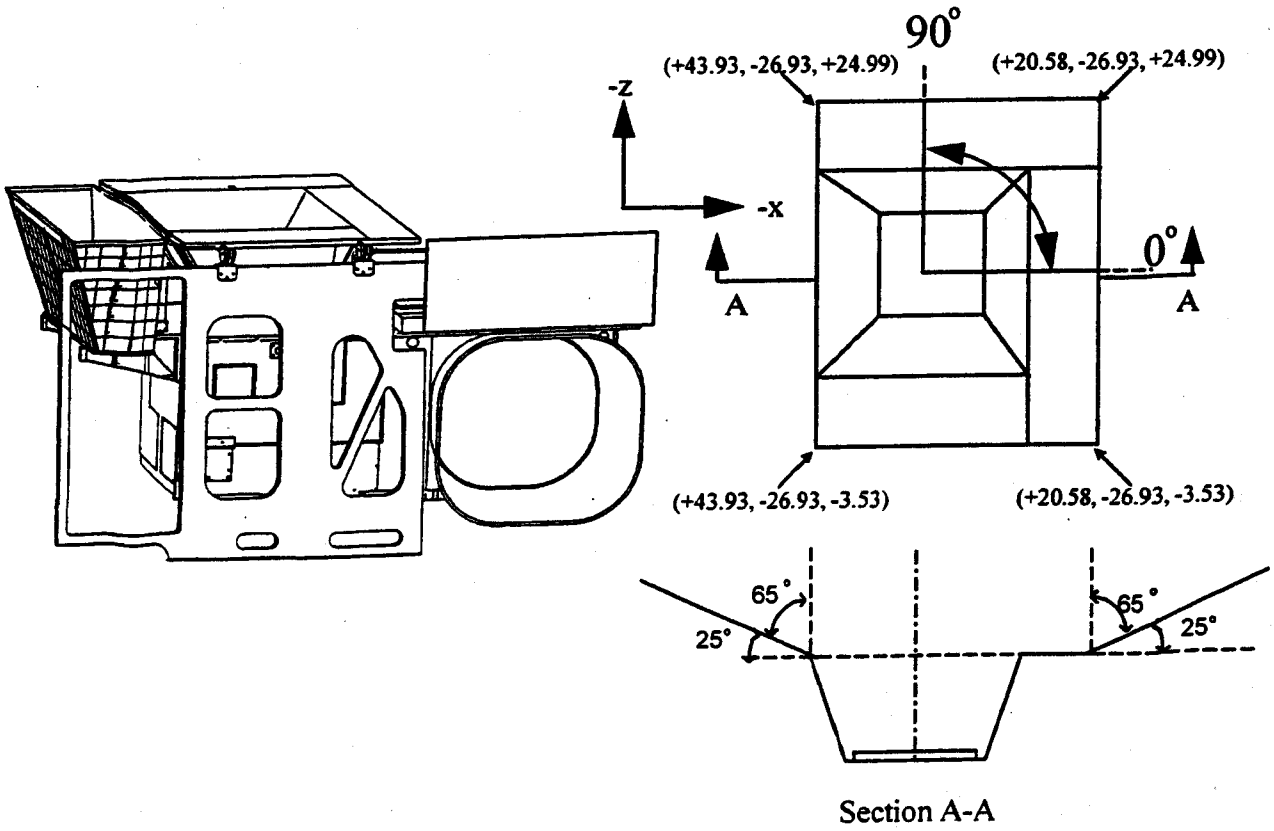


**3.2.3-2 Radiant Cooler FOV**

3.2.3.3 Radiant Cooler Cover Unobstructed Zone

The radiant cooler and filter wheel cooler have a single deployable cover. When the cover opens, it passes through a zone (approximately 270°) to the north (-y) and on the earth (+z) side of the radiant cooler as shown in the Interface Control Drawing (8175756). This zone shall not be obstructed by any spacecraft components.

3.2.3.4 Louvers FOV

The thermal radiating louvers on the Sounder Sensor Module shall have an hemispherical view north (-y) for thermal control. The thermal input onto the louver surfaces from the spacecraft must be minimized and controlled. Incident thermal and reflected solar energy from any spacecraft appendage that intercepts the louver emitter plane (refer to Figure 3.2.3-1) shall not exceed 2 W for any orbital conditions. To shade the thermal radiating louvers, there is an earth-side louver sunshield as shown in the Interface Control Drawing (8175756). If the Imager Sensor Module does not provide shielding of the west end (or east end if the cooler has a southward view) of the Sounder's louvers, additional shielding of the west end shall be required.

3.2.3.5 Filter Wheel Cooler Field of View

To properly cool the filter wheel, the filter wheel cooler shall have the thermally unobstructed fields of view described below (refer to the Sounder Sensor Module Interface Control Drawing - 8175756). The Filter Wheel Cooler OSR surfaces shall have the following FOVs as a minimum:

a. Earth = 23% - 43% view of space

b. Anti-Earth = 43% - 63% view of space

c. East = 80% - 100% view of space

d. Cooler Door (deployed - Earth face of instrument) = 77% - 97% view of space

e. North Face = totally unobstructed (i.e. 100% view of space and no heat load from the spacecraft)

These values are to be used as a design guide. Final spacecraft design details will be analyzed using ITT thermal design software.

3.2.3.6 Pre-Launch Cleaning Access

Several areas of the NOPQ Sounder Sensor Module shall require special access for cleaning. Although the Sensor Module is manufactured in a manner to minimize the accumulation of contamination, cleaning of the sensitive surfaces may still be required to maximize performance. The spacecraft shall be designed to allow access to the following areas until the final preparation-for-launch closet:

a. Optical port cavity for cleaning of the telescope mirrors, scan mirror and the optical cavity surface,

b. The radiant cooler specular shields and OSR surfaces,

c. Filter Wheel Cooler specular shields and OSR surfaces.

If cleaning of the above areas are required, the cleaning shall be performed at the latest possible time prior to launch.

3.2.3.7 Potentially Hazardous Solar Intrusions into FOVs

The following is a list of potentially hazardous solar intrusions into the Sounder Instrument Fields of View. The spacecraft shall not allow any of the following fault conditions to occur:

a. Instrument Line of Sight (LOS) continuously within 6.25° of the sun for greater than 15 minutes -- Telescope heating concern.

b. Scanner Mirror continuously positioned more than 10.5° from nadir (NS) for greater than 5 minutes -- Scan Assembly heating and cooling concern.

c. With cooler door deployed (open), the sun at an angle 25° above the Radiant Cooler OSR plane -- Radiant Cooler heating concern.

d. The sun at any angle within the Optical Port FOV (reference 3.2.3.1) in any non-standard Geostationary Orbit condition (e.g. relative EW sun motion < 15°/hr) -- General Sensor Module thermal concern.

3.2.4 Mechanical Disturbances

3.2.4.1 Spacecraft to Instrument Disturbances

Because the Sounder Sensor Module contains sensitive and precisely aligned optical components, its performance is greatly affected by mechanical disturbances (both linear and angular) imparted by the spacecraft to the instrument baseplate. Angular disturbances below 50 Hz rates translate directly into pointing errors if uncompensated via IMC. Angular disturbances above 50 Hz and linear disturbances at all frequencies can modulate instrument optical alignment causing artifacts in the image. The total angular disturbances from all sources shall be limited to the values in Figure 3.2.4-1 for the given frequencies. These disturbances include (but are not limited to) effects from solar array drives, momentum and reaction wheels, gyros, other payload mechanisms and spacecraft thermal snapping.

The maximum allowable linear disturbances from the spacecraft to the sensor module mounting panel at any of the six mounting feet during orbital operations and spacecraft-level testing shall be those specified in Table 3.2.4- 1.

**Table 3.2.4- 1 Maximum Allowable Sinusoidal Disturbance Accelerations from Spacecraft to Instrument (RMS)**

| Axis | Below 45 Hz | 45 Hz - 120 Hz | Above 120 Hz |
|---|---|---|---|
| X | 5.0 mG | 0.35 mG | 1.2 mG |
| Y | 6.4 mG | 1.0 mG | 1.0 mG |
| Z | 2.3 mG | 0.64 mG | 1.0 mG |

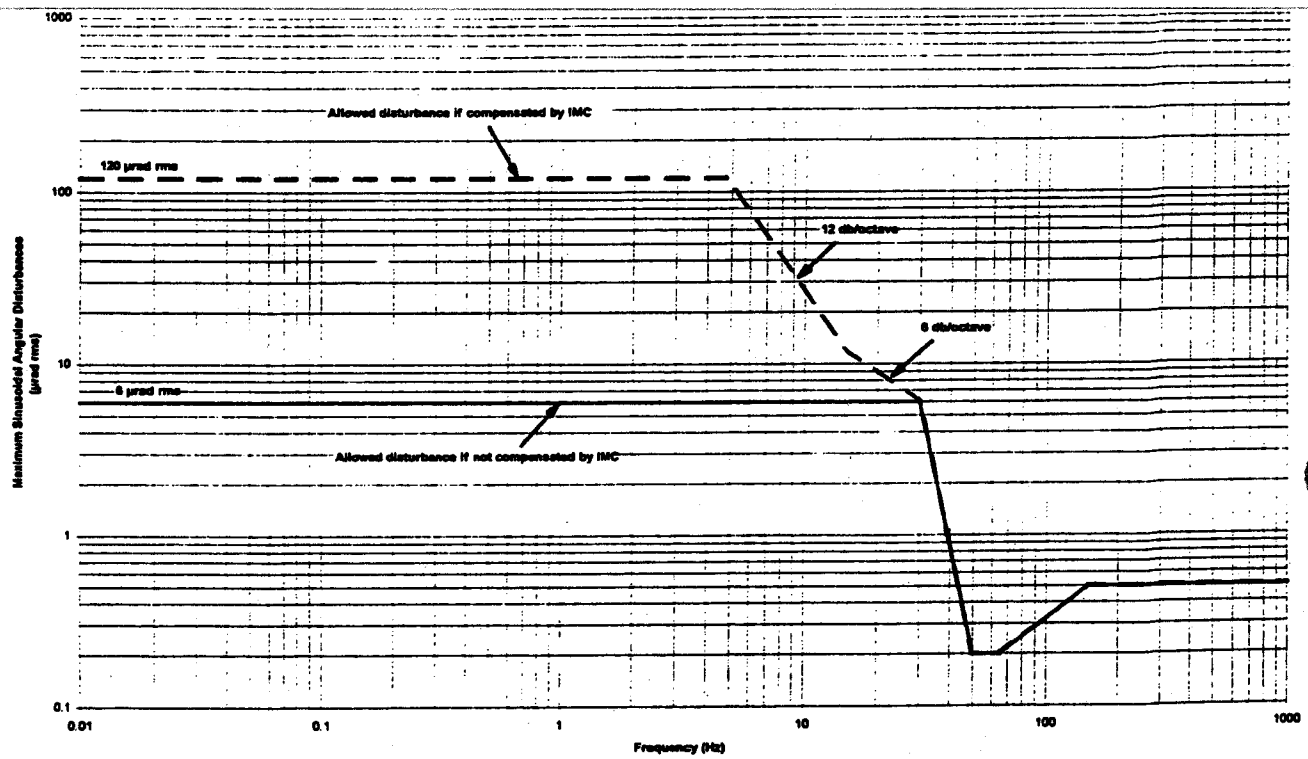


**Figure 3.2.4-1 Envelope of Maximum Sinusoidal Disturbances**

3.2.4.2 Instrument to Spacecraft Disturbances

Due to the dynamic nature of the Sounder Sensor Module on-orbit operations, the instrument will impart disturbances to the spacecraft. The instrument contains a moving mass (the scan mirror) of 5.375 lbs (maximum) in the E-W direction (pitch or y-axis) and 17.725 lbs (maximum) in the N-S direction (roll or x-axis) with a maximum center of gravity off-center of 0.006 inches with respect to their rotational axis . The E-W and N-S moments of inertia for the scan mirror are 4.2 in-oz sec$^2$ (8.5 lb-in$^2$) and 25 in-oz sec$^2$ (50.3 lb-in$^2$) with a maximum mechanical rotation of ± 5.75° E-W and -10.5° to +180° N-S, respectively.

Torque disturbances imparted to the spacecraft and originating from the instrument scanner are depicted in Figure 3.2.4-2 for various accelerations of the scan mirror. The torque plotted represents the net torque transmitted to the spacecraft by scan motors less any bearing and flexible wire assembly drags or torsions internal to the instrument that the motors work against.

Angular position vs. time of the N/S rotation of the scan mirror during a black body calibration is shown in Figure 3.2.4-3. All other movements of the scan assembly are confined to the ±5.75° E/W and ±10.5° N/S instrument field-of-view about nadir. The instrument scan mirror can traverse the entire field-of-view at the rate of 10 °/sec (shaft angle) in either axis when retracing to start of frame, when slewing to a space calibration position or when slewing to a star measurement position.

During normal scan operation, the mirror steps E/W in 140 μrad increments (shaft angle) and N/S in either 1120 μrad or 2240 μrad increments. Stepping can occur on 100 ms, 200 ms or 400 ms intervals. Most of the E/W step movement is accomplished within 15 ms. N/S step requires either 100 ms or 200 ms to move over the majority of the step (overshoots and settling excluded).

The Sounder also contains a continuously rotating filter wheel when the instrument electronics are on. The filter wheel mechanism rotates at 600 rpm ± 0.01% with a moment of inertia of 1.0 in-oz $sec^2$ (2.0 lb-$in^2$) in the instrument y-axis (pitch). During stand-by mode, the filter wheel rotates at a slower speed of 585 rpm ± 2.5%.

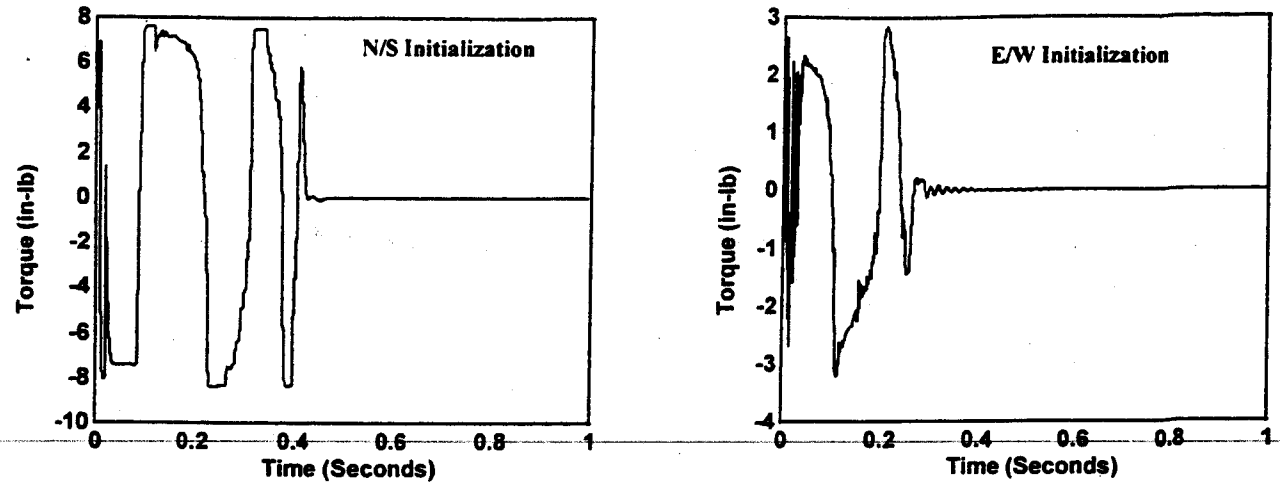


(a) Worst Case Torque Disturbance Following a Scan Motor On, Scan Reset, or Scan Abort Command

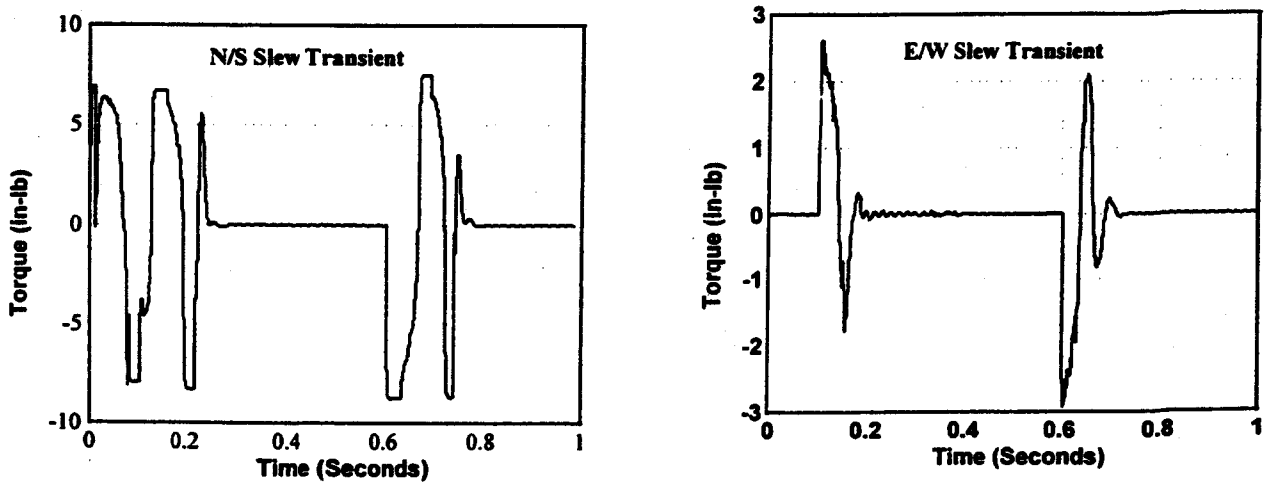


(b) Torque Disturbance When Starting or Stopping a Slew Movement of 10 degrees/second

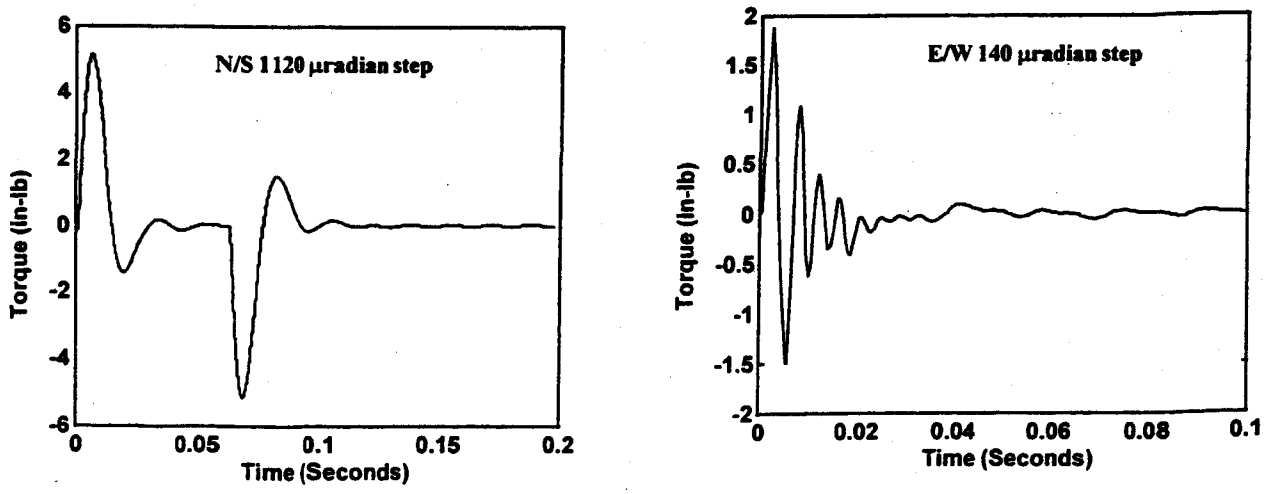


(c) Torque Disturbance During Normal Scanning

**Figure 3.2.4-2 Sounder Scan Mechanism Torque Disturbances to Spacecraft through Instrument Baseplate**

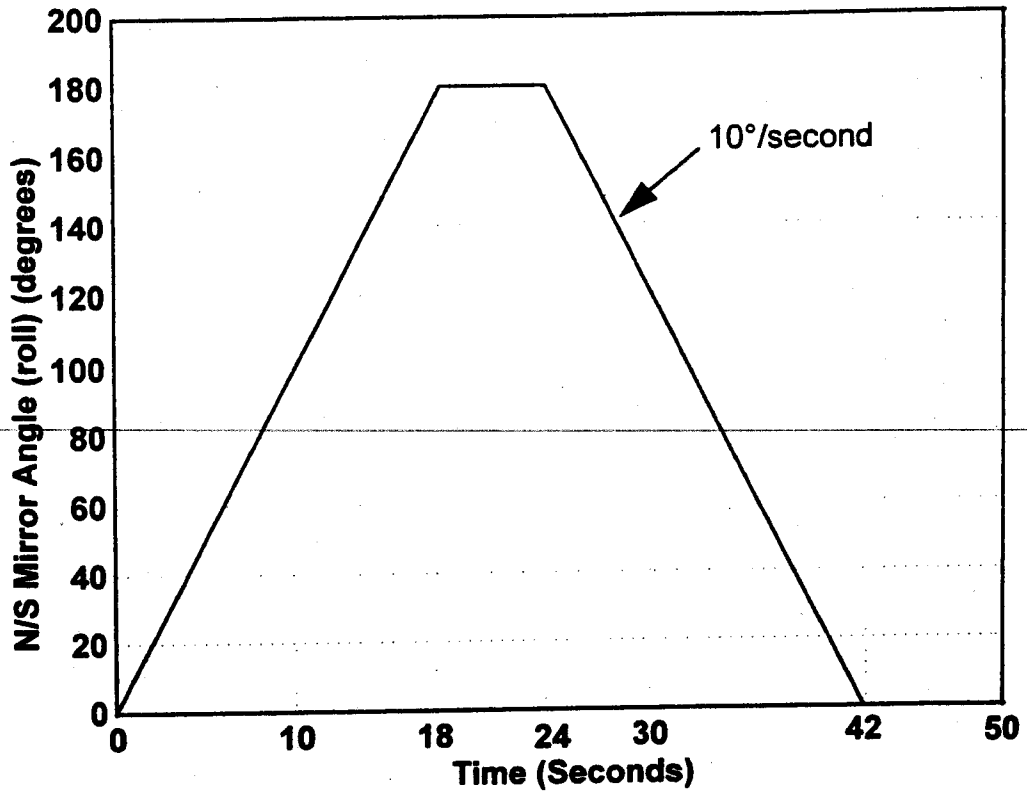


**Figure 3.2.4-3 Sounder Scan Mirror N/S Position vs. Time During a Black Body Calibration**

3.2.5 Mechanical Handling

ITT shall provide specific lifting points on the Sensor Module and electronics module which will allow handling by an overhead crane. A minimum of three lifting points shall be provided which allow the mounting surface to be in a horizontal attitude during installation.

The corner mounting holes in the Sounder Electronics and Power Supply Modules shall have threaded (tapped) mounting holes to be used with jack screws during removal from the spacecraft.

## 3.3 Thermal

### 3.3.1 Allowable Temperatures

The Sounder Mission Nominal, Cold Start, Orbit Raising and Mission Allowable Temperatures are given in Table 3.3.1-1. The spacecraft design shall provide a thermal interface and mission design which maintains the Sounder:

a. within the mission nominal temperature range under all geostationary orbit conditions, including on-orbit storage and safe hold mode;

b. above the orbit raising temperatures and below the Mission Allowable high temperature limits during launch and orbit raising activities;

c. above the Cold Start temperature limits for any Sounder turn-on; and

d. within the Mission Allowable temperature range during spacecraft-level environmental testing.

The Sensor Module, for this purpose, is the baseplate assembly, scan mirror, and primary and secondary mirror assemblies. These temperature limits apply to the bulk average temperature of each of the listed Sensor Module components and the Electronics Module and Power Supply.

The Sensor Module components will be tested to the Mission Allowable High and to the Mission Allowable Low temperatures during instrument-level testing at ITT. The Electronics Module and Power Supply Module will be tested to 10 °C above the Mission Allowable High and 10 °C below the Mission Allowable Low temperatures during instrument-level testing at ITT.

**Table 3.3.1-1 Sounder Temperatures (°C)**

| | Sensor Module | | | | Electronics Module | Power Supply Module |
|---|---|---|---|---|---|---|
| | Scan Mirror | Primary Mirror | Secondary Mirror | Base-plate | (Mounted on Spacecraft) | (Mounted on Spacecraft) |
| Mission Allowable (High) | 70 | 43 | 130* | 37 | 45 | 50 |
| Mission Nominal (High) | 65 | 38 | 40 | 32 | 40 | 45 |
| Mission Nominal(Low) | 5 | 9 | 0 | 12 | -5 | -5 |
| Mission Allowable (Low) | 0 | 4 | -5 | 7 | -10 | -10 |
| Cold Start | -5 | -5 | -5 | -5 | -30 | -30 |
| Orbit Raising | -5 | -5 | -5 | -5 | -30 | -30 |

* Includes Solar Intrusion effects

### 3.3.2 Instrument Thermal Control Design

The Sounder design provides active and passive thermal control for the Sensor Module. There are no thermal control features for the Electronics Module and Power Supply Module. The Sounder thermal design features shall be considered in the design of the spacecraft interface.

#### 3.3.2.1 Thermal Coatings and Properties

The BOL and EOL solar and emittance properties for the Sounder thermal coatings are as shown in Table 3.3.2-1 and shall be used for thermal analysis of the Sounder.

**Table 3.3.2-1 Properties of Thermal Coatings**

| Material | Solar Absorptance (α) | | Emissivity (ε) | |
|---|---|---|---|---|
| **Paints:** | **BOL** | **EOL** | **BOL** | **EOL** |
| Aeroglaze Z-306 - Black Paint | 0.96 | 0.96 | 0.85 | 0.85 |
| NSB69-82E - Black Paint | 0.96 | 0.96 | 0.85 | 0.85 |
| NS-43C - White Paint | 0.20 | 0.40 | 0.90 | 0.90 |
| S13GLO - White Paint | 0.20 | 0.45 | 0.87 | 0.87 |
| MSA-94B - Black Paint | 0.96 | 0.96 | 0.88 | 0.88 |
| Aeroglaze A-276 - White Paint | 0.26 | 0.54 | 0.83 | 0.83 |
| Aeroglaze Z-307 - Black Paint | 0.95 | 0.95 | 0.92 | 0.92 |
| **Metal Finishes:** | **BOL** | **EOL** | **BOL** | **EOL** |
| Gold Tape | 0.26 | 0.30 | 0.045 | 0.045 |
| Gold Plating | 0.26 | 0.30 | 0.03 ± 0.01 | 0.03 ± 0.01 |
| Bare Aluminum | 0.14 | 0.18 | 0.06 | 0.06 |
| Alodined Aluminum | 0.18 | 0.18 | 0.10 | 0.10 |
| Anodized Aluminum - Dyed Black | 0.77 | 0.77 | 0.86 | 0.86 |
| Clear Anodized Aluminum | 0.20 | 0.60 | 0.80 | 0.80 |
| **Optical Coatings:** | **BOL** | **EOL** | **BOL** | **EOL** |
| Enhanced Aluminum - Scan Mirror | 0.13 | 0.23 | 0.053 | 0.053 |
| Enhanced Aluminum - Telescope Mirrors | 0.11 | 0.14 | 0.053 | 0.053 |
| Evaporated Aluminum - Cooler Sunshield | 0.11 | 0.18 | 0.030 | 0.030 |
| **Thermal Control Surfaces:** | **BOL** | **EOL** | **BOL** | **EOL** |
| OSR, Quartz with Silver Coating | 0.08 | 0.22 | 0.84 | 0.84 |
| Silver Teflon | 0.08 | 0.18 | 0.76 | 0.76 |
| Aluminized Kapton - Kapton Out (5 mil) | 0.46 | 0.70 | 0.82 | 0.82 |
| Multi-Layer Blanket | Effective Emittance = 0.03 +0/-0.01 | | | |

3.3.2.2 Thermal Blankets

ITT-provided MLI blankets are used on all exterior surfaces of the Sensor Module except for the -y face, where the radiant cooler and louvers are located. ITT will modify the MLI blanket design if required to satisfy the spacecraft interface design.

3.3.2.3 Sunshields

The Sensor Module design includes two sunshields, which reduce the amount of solar energy that reaches the instrument during the hot portion of the geosynchronous orbit (spacecraft local midnight) during normal operations. The optical port sunshield is attached to the instrument +z face, encircling the optical port, to reduce the amount of direct solar radiation entering the scan cavity. The louver sunshield is positioned along the +z side of the louver assembly to reduce the direct solar illumination of the louvers.

3.3.2.4 Louvers

The Sensor Module design includes a radiator surface and louver assembly on the - y face. The louver assembly is a 10 blade system actuated by 10 independent bi-metallic springs designed to be fully opened at 10 °C and be fully closed at 0 °C. The spacecraft design shall allow proper louver operation by limiting the external heat load on the louvers as defined in paragraph 3.2.3.4.

3.3.2.5 Radiant Cooler

The Sensor Module design includes a three stage passive radiant cooler designed to cool the infrared detectors to operating temperatures below 100K. The spacecraft design shall allow proper operation of the cooler by limiting the external heat load on the cooler as defined in paragraph 3.2.3.2.

### 3.3.2.6 Heaters

#### 3.3.2.6.1 Baseplate Heaters

The Sensor Module design includes two (redundant) sets of proportionally-controlled baseplate heaters to maintain the baseplate temperature at a minimum of 13 °C during orbit raising and on-orbit operations. The spacecraft shall provide power and commands, as defined in paragraphs 3.4.2 and 3.5.1 respectively, to allow operation of the baseplate heaters in high or low power mode as required to maintain the Sensor Module within the allowable temperature range define in Table 3.3.1-1.

#### 3.3.2.6.2 Cooler Patch Control Heater

The Sensor Module radiant cooler includes a non-redundant proportionally-controlled heater to maintain a constant temperature on the cooler patch (infrared detectors) at one of three commandable set points. The spacecraft shall provide the power and commands, as defined in paragraphs 3.4.2 and 3.5.1 respectively, to operate the patch control heater during normal geosynchronous operations.

#### 3.3.2.6.3 Cooler Outgas Heater

The Sensor Module radiant cooler includes a non-redundant thermostatically-controlled heater to heat all three radiant cooler stages (patch, radiator, and vacuum housing) in order to outgas molecular contaminants. The outgas heater has two power levels. Low power mode is used during orbit raising and high power mode is used during the first few weeks of geosynchronous orbit operations. Outgas heater operation may also be required later in the mission life to decontaminate the cooler. The spacecraft shall provide power and commands, as defined in paragraphs 3.4.2 and 3.5.1 respectively, to operate the cooler outgas heater at either power level.

The cooler radiator low-power outgas heater is also used in an "anti-contamination" mode to control the temperature of the cooler radiator to keep the cold optics free of contaminants. In "anti-contamination" mode, the thermostatic setpoint is set at a much lower temperature than in the outgas mode. The spacecraft shall provide power and commands, as defined in paragraphs 3.4.2 and 3.5.1 respectively, to operate the anti-contamination portion of the outgas heater during all geosynchronous orbit conditions.

#### 3.3.2.6.4 Spacecraft-Controlled Anti-Contamination Backup Heater

The spacecraft shall provide the capability to direct the Sounder's power bus to the cooler vacuum housing high-power outgas heater. This "anti-contamination backup heater" shall be used in the event that heat needs to be applied to the vacuum housing to prevent or remove molecular contamination on the vacuum housing windows.

The anti-contamination backup heater shall interface with the instrument at the Sensor Module Cooler Test Connector as defined in paragraph 3.5.5.1.

3.3.2.6.5 Filter Wheel Control Heater

The Filter Wheel cooler includes two (redundant) proportionally-controlled heaters to maintain a constant temperature on the Filter Wheel Housing. The spacecraft shall provide the power and commands, as defined in paragraphs 3.4.2 and 3.5.1 respectively, to operate the patch control heater during normal geosynchronous operations.

3.3.2.6.6 Filter Wheel Outgas Heater

The Filter Wheel cooler includes two (redundant) thermostatically-controlled heaters in order to outgas molecular contaminants. The Filter Wheel outgas heater is used during the first few weeks of geosynchronous orbit operations. The Filter Wheel outgas heater operation may also be required later in the mission life to decontaminate the Filter Wheel cooler. The spacecraft shall provide power and commands, as defined in paragraphs 3.4.2 and 3.5.1 respectively, to operate the Filter Wheel outgas heater.

3.3.3 Power Dissipation

The nominal power dissipation for the ~~Imager~~ Sounder Electronics Module and Power Supply Module are 52.3 W and 26.72 W, respectively.

## 3.4 Electrical

### 3.4.1 General

Figure 3.4.1-1 gives an overview of the electrical interface between the spacecraft and the instrument.

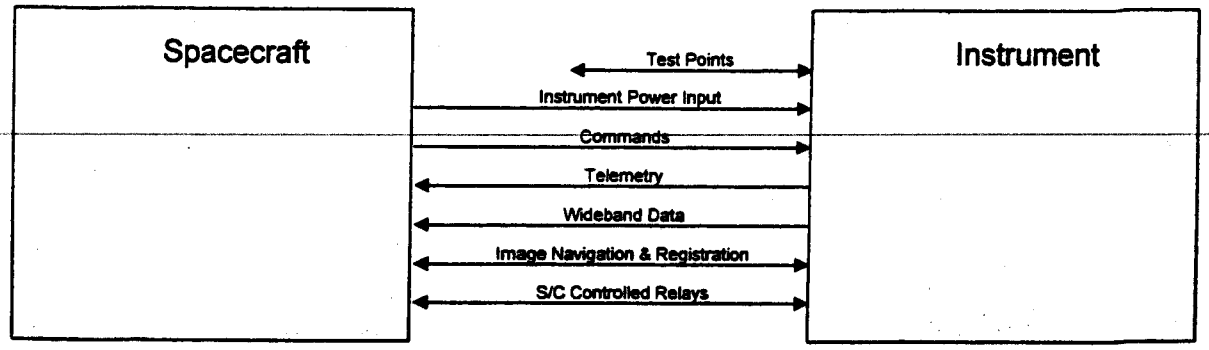


**Figure 3.4.1-1 Electrical Interface**

#### 3.4.1.1 Grounding

Figure 3.4.1-2 shows the Power System Grounding of the spacecraft and the instrument. Within the instrument all electronic returns consisting of Pulse Command Returns, Bi-Level Telemetry Returns, Instrument Primary Power Return and Instrument Secondary Power Returns shall be isolated from chassis and from each other. Each of these returns may receive their reference to chassis via the spacecraft wiring per Figure 3.4.1-2.

The instrument's secondary power return shall be provided to the spacecraft via multiple digital signal interface returns (see Figure 3.4.1-2) and the spacecraft shall reference one or more of these returns to chassis. The instrument shall provide an optional jumper wire in Sensor Module connector J4 through which the instrument's secondary power return could be connected to chassis near the instrument's most sensitive circuits. Connection of this additional chassis ground will be determined by mutual agreement between ITT and the spacecraft contractor at or prior to spacecraft's System Concept Review.

The spacecraft shall terminate the Wideband Data Return (coax cable shield) to the spacecraft signal ground.

The spacecraft shall provide an electrical impedance measuring no more than 0.010 ohm between the chassis of any instrument module (Electronics, Power Supply or Sensor Module) and the chassis of any other instrument module.

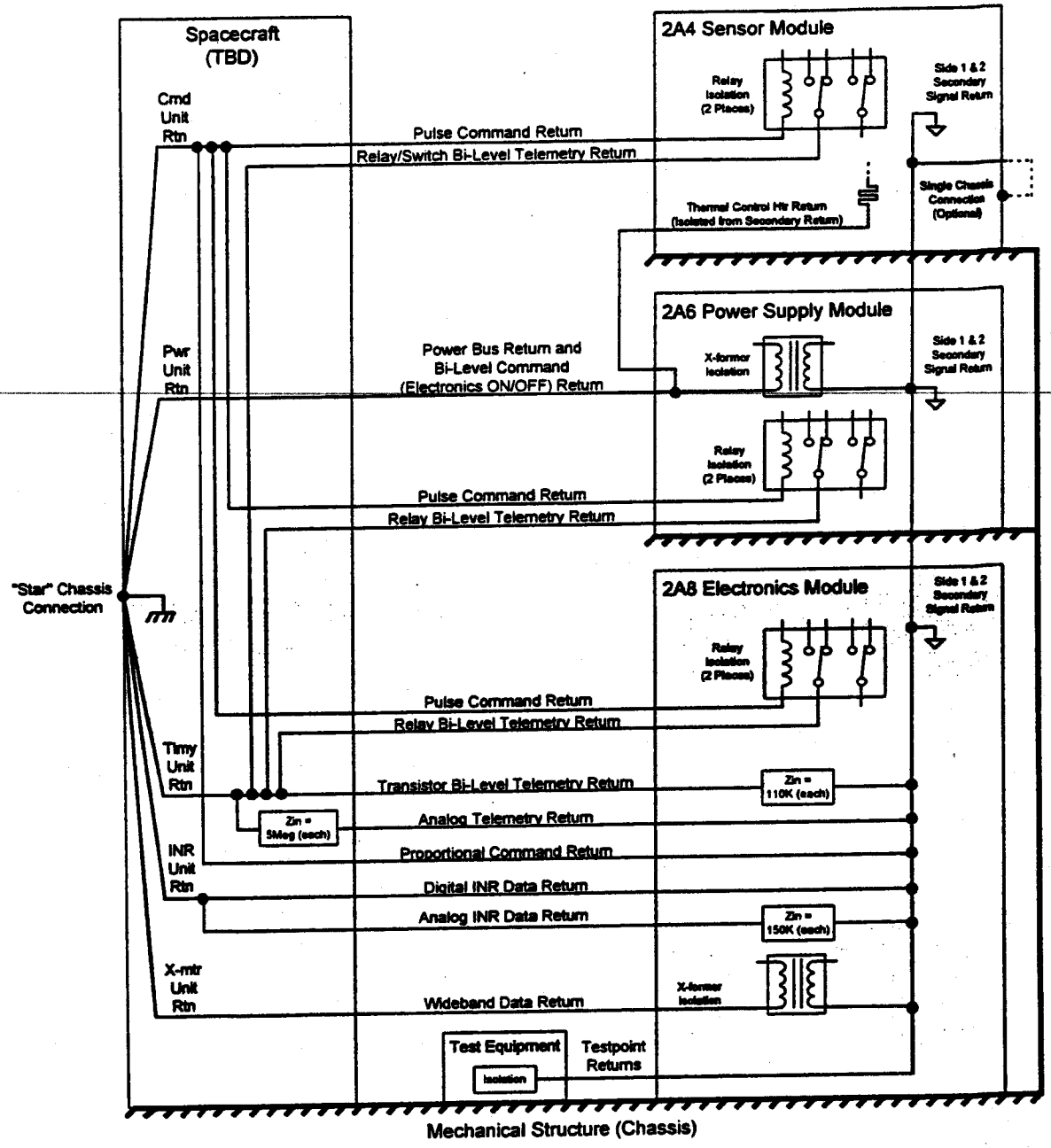


**Figure 3.4.1-2 Grounding**

### 3.4.1.2 Instrument Module Connectors

Table 3.4.1-1 is a list of Instrument Module Connectors. The locations of the interface connectors shall be as shown on the instrument module Interface Control Drawings. The connector pin assignments shall be as given in Appendix 5.4 of this document.

**Table 3.4.1-1 Instrument Module Connectors**

| Item | Connector Designator | Connector Name | Pin/ Socket | No. of Pins | Key Pins | Part No. |
|---|---|---|---|---|---|---|
| 1 | 2A4J1 | S-Mod Telemetry | Socket | 50 | 1,16 | DDMA-K-50S-NMB-K47 |
| 2 | 2A4J2 | Detector Preamp Inputs | Pin | 50 | 18,33 | DDMA-K-50P-NMB-K47 |
| 3 | 2A4J3 | Servo Preamps | Socket | 50 | 2,50 | DDMA-K-50S-NMB-K47 |
| 4 | 2A4J4 | Video Power | Pin | 50 | 2,33 | DDMA-K-50P-NMB-K47 |
| 5 | 2A4J5 | Scan Control No.2 | Pin | 50 | 33,34 | DDMA-K-50P-NMB-K47 |
| 6 | 2A4J6 | Video | Socket | 50 | 2,49 | DDMA-K-50S-NMB-K47 |
| 7 | 2A4J7 | Scan Control No.1 | Socket | 50 | 17,34 | DDMA-K-50S-NMB-K47 |
| 8 | 2A4J8 | Command/Telemetry No.2 | Socket | 50 | 4,37 | DDMA-K-50S-NMB-K47 |
| 9 | 2A4J9 | (not used) | | | | |
| 10 | 2A4J10 | Cooler Test | Socket | 50 | n/a | DDMA-K-50S-NMB-K47 |
| 11 | 2A4J11 | Side 1&2 Power | Pin | 25 | n/a | DDMA-K-25P-NMB-K47 |
| 12 | 2A4J12 | Cooler Cover Release No.2 | Socket | 2 | n/a | NSI SEB26100001-250 |
| 13 | 2A4J13 | Cooler Cover Release No.1 | Socket | 2 | n/a | NSI SEB26100001-250 |
| 14 | 2A4J14 | Cooler Cover Status | Pin | 9 | n/a | DEMA-K-9P-NMB-K47 |
| 15 | 2A6J1 | Spacecraft Power | Pin | 15 | n/a | DAMA-15P-NM-FO |
| 16 | 2A6J2 | Side 1&2 Power | Socket | 25 | n/a | DBMA-25S-NM-FO |
| 17 | 2A6J3 | Side 1 Power | Socket | 50 | 1,50 | DDMA-50S-NM-FO |
| 18 | 2A6J4 | Side 2 Power | Socket | 50 | 17,18 | DDMA-50S-NM-FO |
| 19 | 2A6J5 | Command/Telemetry No.1 | Pin | 37 | n/a | DCMA-37P-NM-FO |
| 20 | 2A6J6 | Fuse Test | Socket | 50 | n/a | DDMA-50S-NM-FO |
| 21 | 2A8J1 | Scan Control No.1 | Socket | 50 | 17,34 | DDMA-50S-NM-FO |
| 22 | 2A8J2 | Scan Control No.2 | Socket | 50 | 33,34 | DDMA-50S-NM-FO |
| 23 | 2A8J3 | Command No.2 | Pin | 50 | 34,50 | DDMA-50P-NM-FO |
| 24 | 2A8J4 | Wideband Data No.2 | Coax | n/a | n/a | SMA - JACK |
| 25 | 2A8J5 | Side 2 Power | Pin | 50 | 17,18 | DDMA-50P-NM-FO |
| 26 | 2A8J6 | Video Timing | Socket | 50 | 18,33 | DDMA-50S-NM-FO |
| 27 | 2A8J7 | S-Mod Telemetry | Pin | 50 | 1,16 | DDMA-50P-NM-FO |
| 28 | 2A8J8 | Telemetry No.2 | Socket | 50 | 1,17 | DDMA-50S-NM-FO |
| 29 | 2A8J9 | Telemetry No.1 | Socket | 50 | 1,32 | DDMA-50S-NM-FO |
| 30 | 2A8J10 | Video | Pin | 50 | 2,49 | DDMA-50P-NM-FO |
| 31 | 2A8J11 | Video Power | Socket | 50 | 2,33 | DDMA-50S-NM-FO |
| 32 | 2A8J12 | Side 1 Power | Pin | 50 | 1,50 | DDMA-50P-NM-FO |
| 33 | 2A8J13 | Wideband Data No.1 | Coax | n/a | n/a | SMA - JACK |
| 34 | 2A8J14 | Command No.1 | Pin | 50 | 1,49 | DDMA-50P-NM-FO |
| 35 | 2A8J15 | Image Navigation & Registration | Pin | 50 | 1,33 | DDMA-50P-NM-FO |
| 36 | 2A8J16 | Servo Preamps | Pin | 50 | 2,50 | DDMA-50P-NM-FO |
| 37 | 2A8J17 | Servo Test | Socket | 50 | 2,32 | DDMA-50S-NM-FO |
| 38 | 2A8J18 | Video Test | Socket | 50 | 2,17 | DDMA-50S-NM-FO |
| 39 | 2A8J19 | Scan Control Test | Socket | 50 | 2,16 | DDMA-50S-NM-FO |
| 40 | 2A8J20 | PROM Test | Socket | 50 | 47,48 | DDMA-50S-NM-FO |

The spacecraft contractor shall provide the instrument's external harness with connector shells made from non-magnetic material with an electrically conductive finish. The spacecraft shall provide the capability to terminate harness shields to the connector backshells. Cadmium plating shall not be used. Connector contacts shall be gold plated. Silver plating shall not be used under the gold plating. The spacecraft contractor shall use the keying and harness connector designations shown in Table 3.4.1-1.

### 3.4.1.3 Instrument Module Harness Interconnects

The spacecraft design shall include the instrument module harness interconnects for the Sensor Module, Electronics Module, and Power Supply Module as shown in Figure 3.4.1-3. The length of the harness cable shall not exceed the maximum cable lengths shown in Table 3.4.1-2. Signals interfacing the Sensor Module, Electronics Module, and Power Supply Module only (non-spacecraft interfaces) are included in Figure 3.4.1-3 and in Appendix 5.4 Instrument Wire List / Pin Assignments, but this ICD does not provide detailed paragraphs, diagrams, or schematics for these interfaces. The Interface Control Drawings contain information on all connector markings and locations for each module. Appendix 5.4 of this document contains wire size, signal names, pin assignments for all connectors.

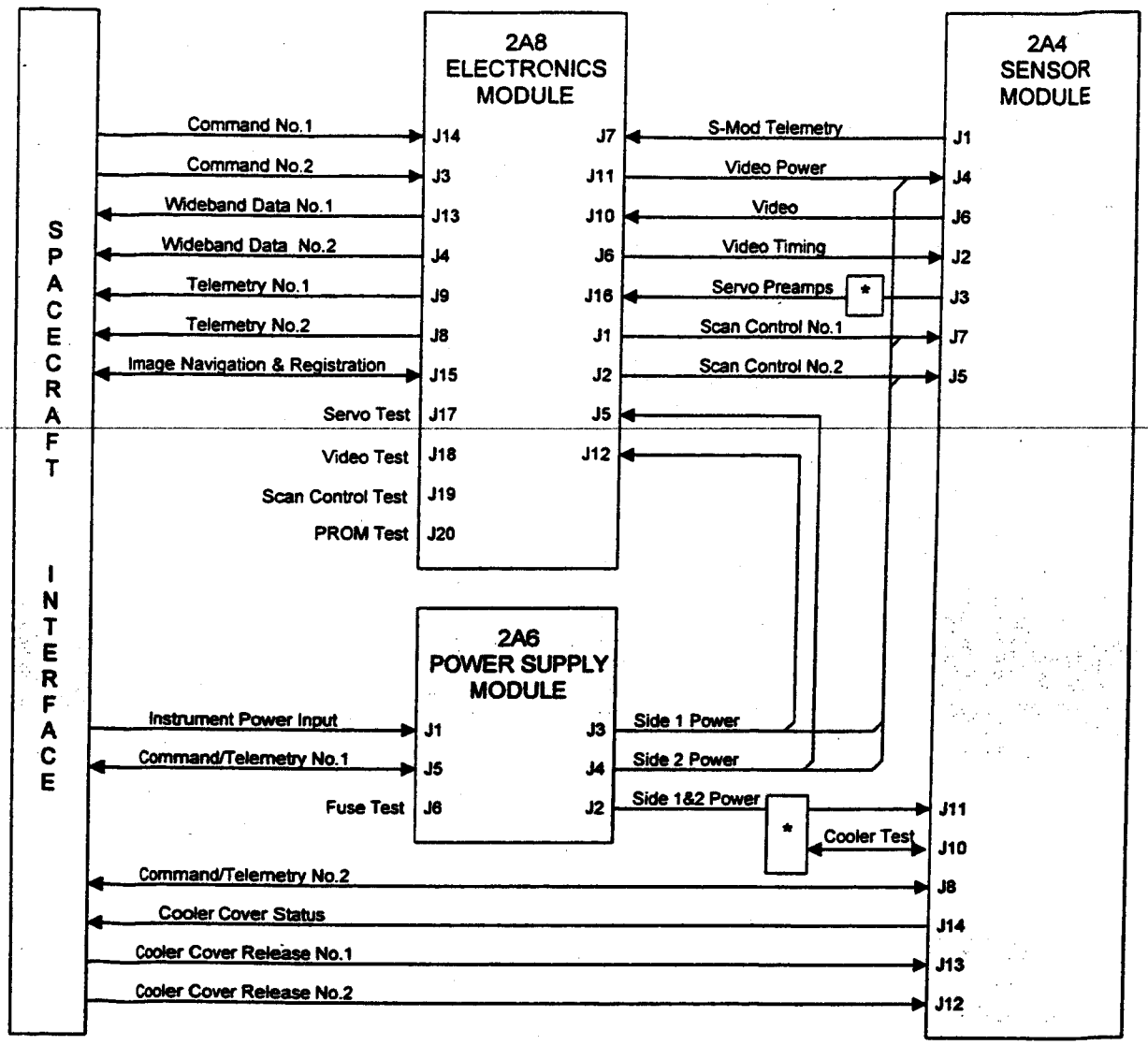


* Note: These boxes contain spacecraft controlled relays (See section 3.5.5). Spacecraft connections are not shown.

**Figure 3.4.1-3 Instrument Module Harness Interconnects**

**Table 3.4.1-2 Instrument External Harness Cable Lengths**

| Item | Cable Connections | Maximum Cable Length (meter) |
|---|---|---|
| 1 | Instrument (any module) to Spacecraft | 7 |
| 2 | Electronics Module to Sensor Module | 4 |
| 3 | Electronics Module to Power Supply Module | 2 |
| 4 | Power Supply Module to Sensor Module | 4 |
| 5 | Electronics Module Test Connectors | 15 |

### 3.4.1.4 Test Connectors

The test points shown in Figure 3.4.1-4 shall be provided by the instrument to facilitate testing and ensure conformance with the system specification.

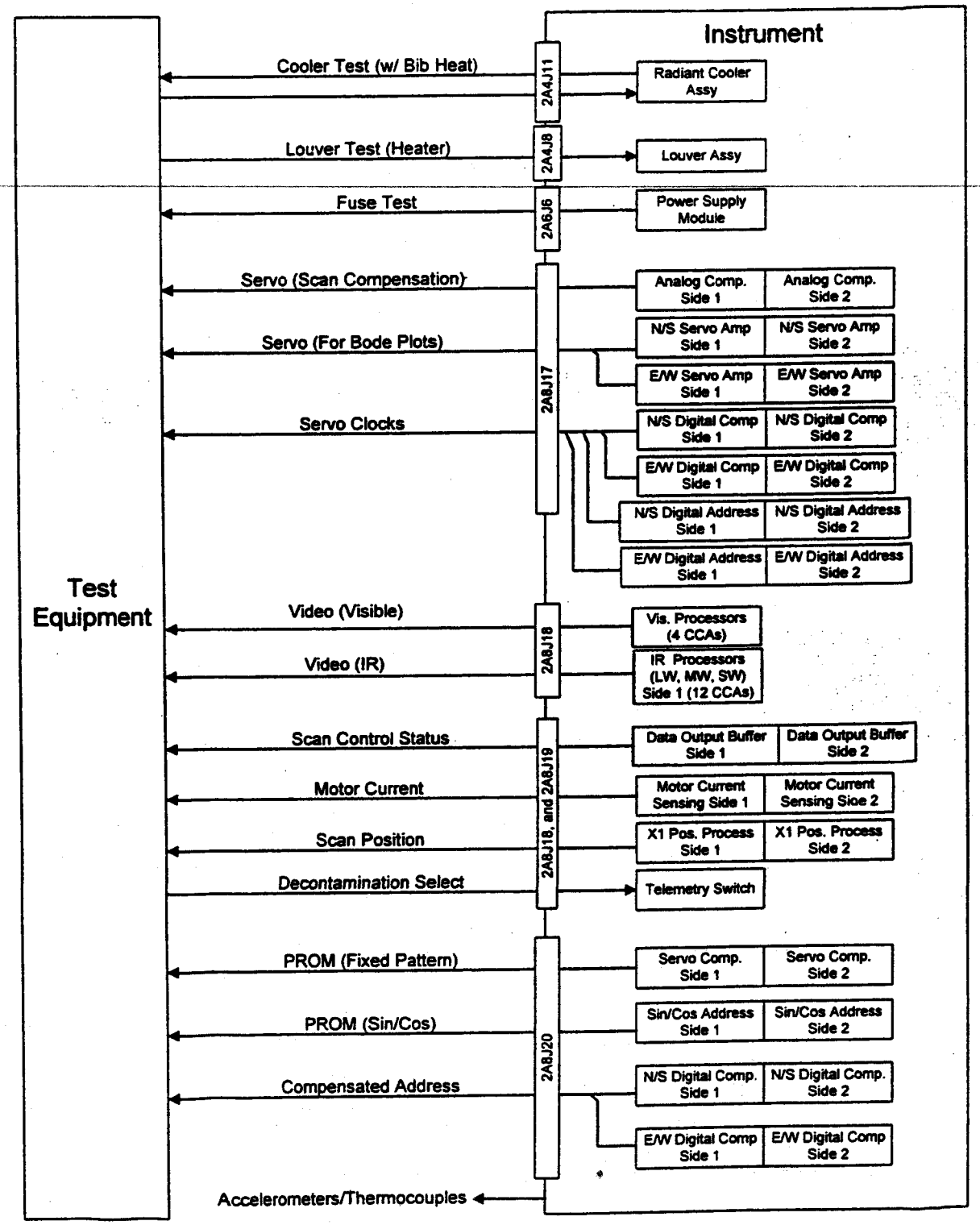


**Figure 3.4.1-4 Test Connector Interface**

A separate test connector shall contain means to verify Instrument Power Input fuse integrity. Test points shall be internally buffered so that the instrument performance is not affected when monitoring. Short circuit protection of all test points shall be provided. The instrument shall operate within specification while a test point is shorted to ground.

The spacecraft shall provide access to the Electronics Module test connectors while the instrument is mounted on the spacecraft. The spacecraft manufacturer shall provide the test cables necessary to access the Electronic Module test connectors while the instrument is mounted on the spacecraft. The spacecraft shall provide access to the wires from instrument mounted accelerometers and thermocouples. ITT shall remove or terminate the accelerometer and thermocouple wires at the conclusion of spacecraft testing.

### 3.4.2 Power

The spacecraft shall provide all power needed to operate the instrument through a single non-redundant Instrument Power Input. The interface shall be as shown in Figure 3.4.2-1.

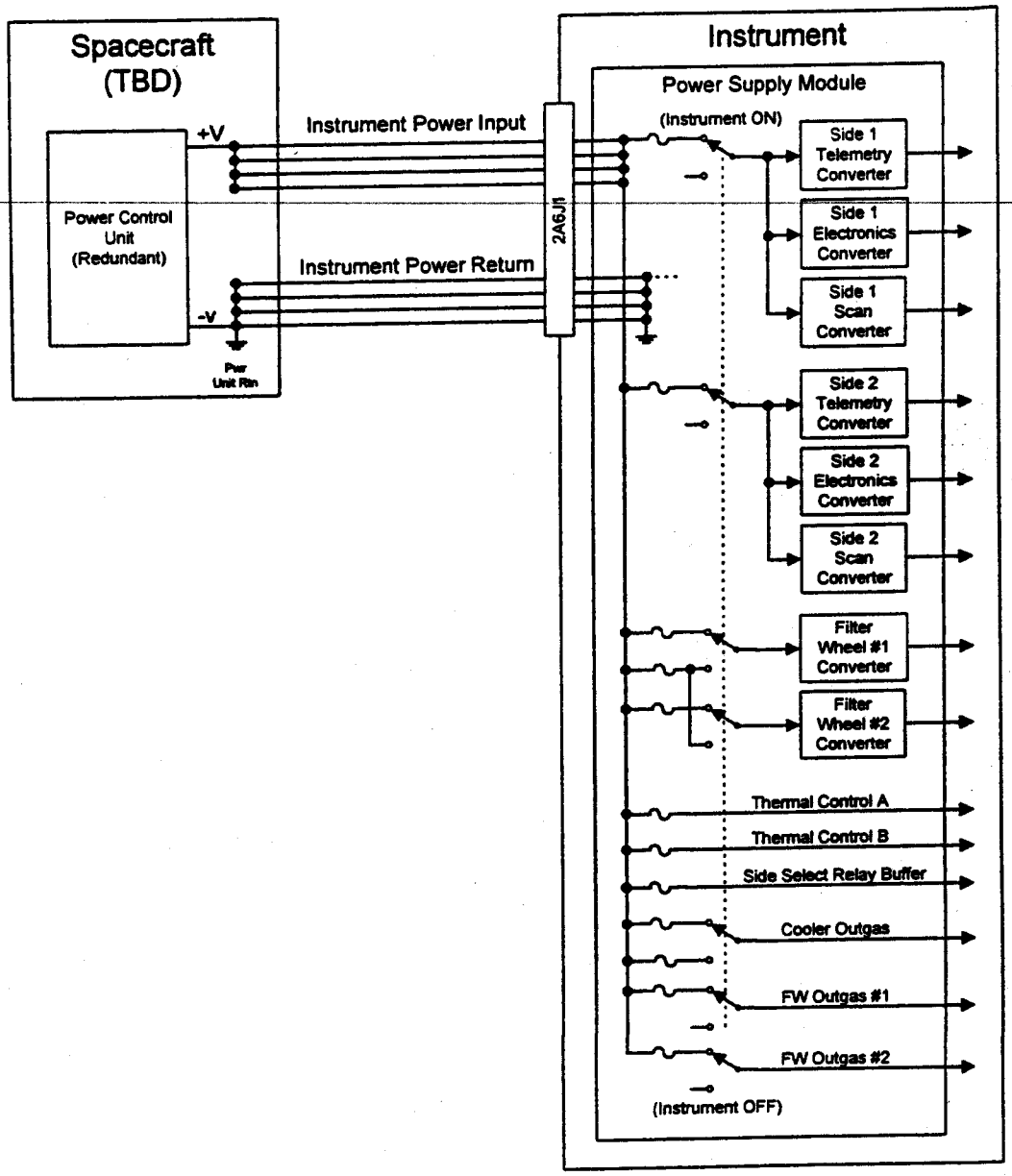


**Figure 3.4.2-1 Instrument Power Input Interface**

The DC/DC converters within the instrument's Power Supply Module shall provide redundant primary side fusing as specified in Table 3.4.2-1. Instrument heaters shall make use of the Instrument Power Input without a converter and shall have redundant fusing located in the instrument's Power Supply Module. All other instrument loads shall receive their power from the instrument's power converters. All instrument power converters shall be synchronized

to the instrument's master clock during normal operation (excludes standby mode). The power converter switching frequency shall be 100 kHz +/-100 ppm.

**Table 3.4.2-1 Instrument Power Input Fuse Requirements**

| Item | Description | Maximum Current (Amps) | Fuse Rating (Amps) |
|---|---|---|---|
| 1 | Side-1 DC/DC Converters | 4.3 | 10 |
| 2 | Side-2 DC/DC Converters | 4.3 | 10 |
| 3 | Filter Wheel Motor (No.1 or No.2 ON) | 0.9 | 3 |
| 4 | Thermal Control A | 3.2 | 7 |
| 5 | Thermal Control B | 3.2 | 7 |
| 6 | Side Select Relay Buffer | 0.1 | 3 |
| 7 | Cooler Outgas | 2.2 | 10 |
| 8 | Filter Wheel Outgas #1 | 0.8 | 3 |
| 9 | Filter Wheel Outgas #2 | 0.8 | 3 |

3.4.2.1 DC Voltage

The spacecraft shall provide the Instrument Power Input voltage as defined in Table 3.4.2-2.

**Table 3.4.2-2 Instrument Power DC Voltage**

| Item | Instrument Power Input Voltage (Vin) @ Instrument Connector | Required Instrument Performance |
|---|---|---|
| 1 | +40Vdc ≤ Vin ≤ +43Vdc | The instrument shall meet all requirements for Normal and Standby modes. |
| 2 | 0Vdc ≤ Vin < +40 Vdc | Not required to meet any performance requirements. The instrument shall not be stressed and shall not draw more than 150% of the power drawn at Vin = +40 Vdc. |

3.4.2.2 Voltage Transients

The spacecraft shall limit voltage transients on the Instrument Power Input to the range specified in Table 3.4.2-3. The transient condition shall last no longer than 400 microseconds and shall not occur at a rate greater than 2 per second .

**Table 3.4.2-3 Instrument Power Voltage Transients**

| Instrument Power Input Voltage (Vin) @ Instrument Connector | Required Instrument Performance |
|---|---|
| +39.5V ≤ Vin ≤ +43.5V (Recovers within 400μSec) | Shall meet conducted susceptibility requirements (paragraph 3.4.3.3) for Normal and Standby modes. |

3.4.2.3 Instrument Power Consumption

The following sections specify the maximum power that the instrument shall draw from the spacecraft at Beginning-of-Life (BOL). The instrument's End-of-Life (EOL ) power consumption shall not exceed the maximum BOL values by more than 5%.

3.4.2.3.1 Steady-State BOL Power

The maximum steady-state BOL power (Excluding Scan Transients) from the instrument shall not exceed the maximum values specified in Table 3.4.2-4. The instrument's Thermal Control Heater shall provide proportional control which, when thermally stabilized, will typically draw the steady-state power (Wss) shown in Table 3.4.2-4. This number assumes that the instrument is thermally decoupled from the spacecraft. At initial turn-on and until thermal control is established, the Thermal Control Heater shall draw no more than the maximum power (Wmax) shown in Table 3.4.2-4. The numbers shown in Table 3.4.2-4 are for a single set of Thermal Control Heaters.

The instrument's Cooler Outgas and Anti-Contamination Heaters shall provide thermostatic (bang-bang) control and shall draw no more than the maximum power (Wmax) shown in Table 3.4.2-4

**Table 3.4.2-4 Maximum Steady-State BOL Power (@Vin=42V)**

| Item | Description | Launch | Orbit Raising | On-Orbit Storage | Initial Outgas | Normal Operation (Includes Eclipse) |
|---|---|---|---|---|---|---|
| 1 | Standby:<br>(Telemetry & Filter Wheel ON) | 29W | 29W | 29W | 29W | 29W |
| 2 | Normal Operation:<br>(Electronics & Scan ON @ Idle) | | | | 59W | 59W |
| 3 | Thermal Control Heater (1of 2):<br>High Power (112Wmax)<br>Low Power (75Wmax) | | 76Wss<br>112Wmax | 76Wss<br>112Wmax | 36 Wss<br>112Wmax | 36 Wss<br>112Wmax |
| 4 | Cooler Outgas Heater:<br>High Power<br>Low Power | | 15W | | 82W | |
| 5 | Anti-Contamination Heater:<br>Normal<br>Backup (20Wmax) | | | | | 2W |
| 6 | Filter Wheel Control Heater | | | | | 4W |
| 7 | Filter Wheel Outgas | | | | 31W | |
| 8 | Total Power | 29W | 120Wss<br>156Wmax | 105Wss<br>141Wmax | 237Wss<br>313Wmax | 130Wss<br>206Wmax |

3.4.2.3.2 Transient Currents

The transient currents produced on the Instrument Power Input by the instrument shall not exceed the maximum values specified in Table 3.4.2-5. Any transients shorter than 2 milliseconds shall be characterized with a temporal resolution of at least 50 microseconds. The Scanning transient shall not occur more often than 10 events per second.

**Table 3.4.2-5 Transient Currents**

| Operating Conditions | Maximum Current (Amps) |
|---|---|
| Turn-On & Mode Switching (≥ 2mSec) | 4.3 |
| Stepping (≤ 10 events/second) | 3.9 |

### 3.4.3 Electromagnetic Compatibility (EMC)

The spacecraft and instrument shall be designed for electromagnetic compatibility using MIL-STD-1541 and MIL-STD-461 as design guides. Conformance to EMC requirements shall be verified on both electronics Side 1 and Side 2 of every flight unit, except when noted otherwise, using MIL-STD-462 as a guide.

#### 3.4.3.1 Steady-State CE of Power Line

The spacecraft shall be able to tolerate the maximum steady-state narrow band Conducted Emissions (CE) generated by the instrument and fed back to the Instrument Power Input. The instrument's Power Line Steady-State CE shall not exceed the values shown in Figure 3.4.3-1, which contain 12dB margin over prior instrument test results above 300Hz. This requirement applies from 30Hz to 1Megahertz at the measurement bandwidths shown in Figure 3.4.3-1.

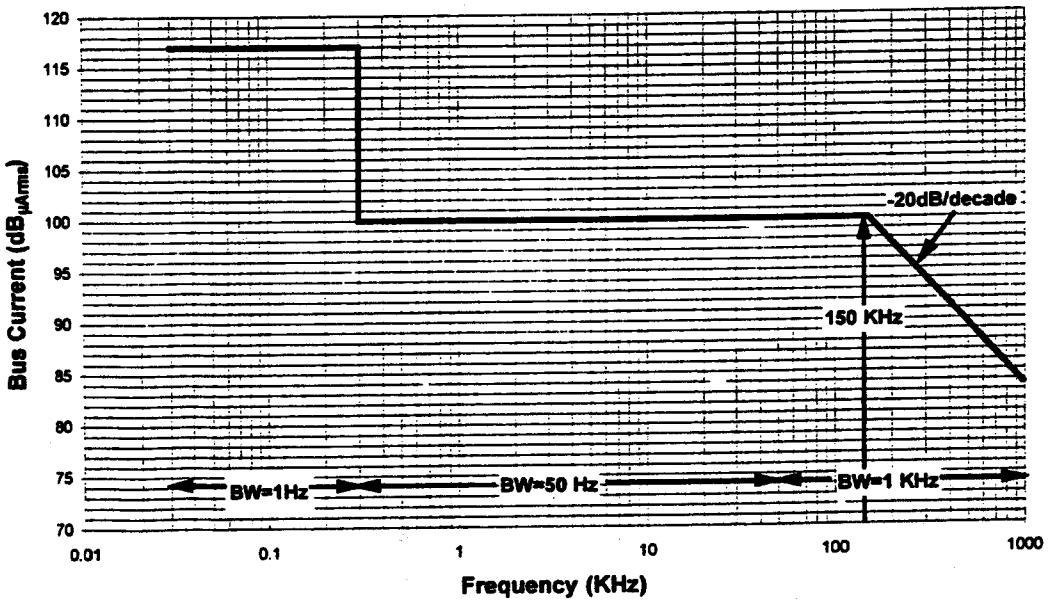


**Figure 3.4.3-1 Steady-State CE of Power Line**

3.4.3.2 CE of Selected Signal Lines

The spacecraft shall be able to tolerate the maximum peak-to-peak Conducted Emissions (CE) generated by the instrument. The instrument's CE on Selected Signal Lines shall not exceed the values shown in Table 3.4.3-1. This requirement applies to the output signals, electronic sides, and the scan operating modes defined in the Table 3.4.3-1. This requirement applies only to the limited number of selected spacecraft-to-instrument interface signals shown in the table.

**Table 3.4.3-1 CE of Selected Signal Lines**

| Instrument Output Signal | Scan Operating Mode | Maximum CE (5 MHZ Bandwidth) |
|---|---|---|
| Proportional Command<br>a. Data Strobe | Servo Off | ≤ 150 mVp-p |
| Scan Status<br>a. E/W Scan Direction<br>b. E/W Slew Status<br>c. N/S Scan Direction<br>d. N/S Slew Status | Normal Frame | ≤ 250 mVp-p |
| Mirror Position<br>a. Data Request<br>b. Data Strobe<br>c. Data | Idle | ≤ 250 mVp-p |
| Wideband Data | Idle | ≤ 150 mVp-p |
| Bi-Level Telemetry<br>a. Frame Status<br>b. Space Look Status | Idle & Star Sequence | Logic "1" ≤ 100 mVp-p<br>Logic "0" ≤ 50 mVp-p |
| Analog Telemetry<br>a. Baseplate Temperature #1<br>b. +17V Electronics | Star Sequence | ≤ 20 mVp-p |

### 3.4.3.3 Steady-State CS of Power Line

The spacecraft shall provide the instrument with the Instrument Power Input with interference levels below the instrument's specified Power Line Steady-State Conducted Susceptibility (CS), which is shown in Figure 3.4.3-2. This requirement excludes noise voltages causes by conducted emissions from the instrument itself. Only additive noise generated by the spacecraft itself should be tested to this requirement. The instrument shall meet all performance requirements when subjected to the steady-state narrowband interference voltage superimposed upon the Instrument Power Input voltage as shown in Figure 3.4.3-2. This requirement applies from 1Hz to 5 MHz.

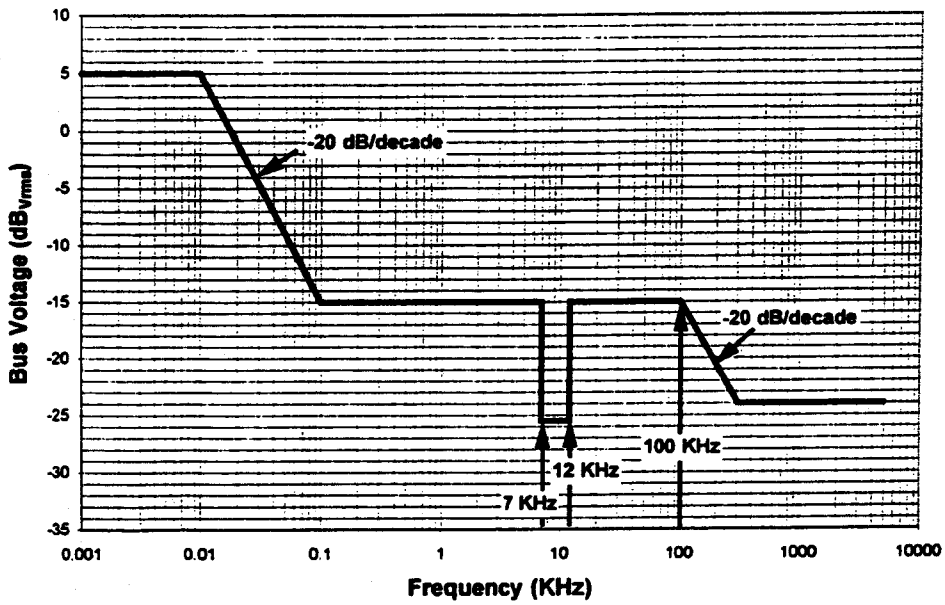


**Figure 3.4.3-2 Steady-State CS of Power Line**

### 3.4.3.4 CS of Selected Signal Lines

The spacecraft shall provide the instrument with the specified signal inputs having interference levels below the instrument's Conducted Susceptibility (CS) as specified for Selected Signal Lines as shown in Table 3.4.3-2. The instrument shall meet the performance requirements stated in this section when subjected to the steady-state narrowband interference voltages superimposed upon the instrument input signals as shown in Table 3.4.3-2. This requirement applies only to the signals specified in this section. The conducted susceptibility requirement is constant at 200 millivolts or 100 millivolts, whichever applies, from 1 Hz to 150 kHz, and decays at -20 dB/decade from 150 kHz to 400 kHz. The conducted susceptibility requirement for these signals is satisfied if the echoed data in the instrument output data stream matches the original inputs.

**Table 3.4.3-2 CS of Selected Signal Line**

| Instrument Input Signal | Scan Operating Mode | Interference Amplitude |
|---|---|---|
| Proportional Command<br>a. Data Ready<br>b. Data | Scan OFF | Logic "1" = 200 mVp-p<br>Logic "0" = 100 mVp-p |
| S/C Attitude Data (INR1)<br>a. Timing Gate<br>b. Clock<br>c. Data | Star Sequence | Logic "1" = 200 mVp-p<br>Logic "0" = 100 mVp-p |

3.4.3.5 Common Mode Voltage Noise

The maximum spacecraft generated broadband common mode noise between chassis and instrument secondary return as measured at the instrument interface shall not exceed the levels specified in Table 3.4.3-3 when configured per Figure 3.4.1-2.

**Table 3.4.3-3 Common Mode Voltage Noise**

| | Measurement Method | Frequency Range | Maximum Level |
|---|---|---|---|
| Broadband | Oscilloscope<br>(Bandwidth = 400 MHz) | Up to 400 MHz | ± 0.5V peak-to-peak |
| Narrowband | Spectrum Analyzer<br>( Measurement BW = 1kHz) | 4 kHz to 1 MHz<br>Above 1 MHz | ± 10mV peak<br>± 100mV peak |

3.4.3.6 Radiated Emissions of Instrument (RE)

The spacecraft shall be able to tolerate the maximum Radiated Emissions (RE) generated by the instrument. The instrument's maximum Radiated Emissions, frequency ranges, and measurement bandwidth specifications shall be as shown in Table 3.4.3-4. The radiated emissions of the instrument is specified at a distance of 1 meter from the sensor module's optical port while the instrument is operating a Normal Frame.

**Table 3.4.3-4 Radiated Emissions of Instrument (RE)**

| Frequency Range | | Measurement Bandwidth | Field Strength |
|---|---|---|---|
| Lower Frequency | Upper Frequency | | |
| 14 kHz | 2.4 MHz | 1 kHz | 54 dBμV/m |
| 2.4 MHz | 30 MHz | 10 kHz | 60 dBμV/m |
| 30 MHz | 200 MHz | 100 kHz | 76 dBμV/m |
| 200 MHz | 1 GHz | 100 kHz | 62 dBμV/m |
| 1 GHz | 10 GHz | 1 MHz | 72 dBμV/m |
| 401.700 MHz | 402.400 MHz | 100 Hz | -10 dBμV/m |
| 406.000 MHz | 406.100 MHz | 100 Hz | -13 dBμV/m |
| 2025.600 MHz | 2029.800 MHz | 1 kHz | -6 dBμV/m |
| 2032.950 MHz | 2033.050 MHz | 1 kHz | -7 dBμV/m |
| 2034.150 MHz | 2034.250 MHz | 10 kHz | -7 dBμV/m |
| 2034.850 MHz | 2034.950 MHz | 300 Hz | -15 dBμV/m |

3.4.3.7 Radiated Susceptibility of Instrument (RS)

The spacecraft shall not produce radiated interference levels in excess of the Radiated Susceptibility of the instrument as defined in Table 3.4.3-5. The requirement applies at the frequencies shown in Table 3.4.3-5 at two source positions:

a. The source positioned 1 meter from the sensor module's optical port.

b. The source positioned 1 meter from the sensor module's radiant cooler.

The Radiated Susceptibility requirement is satisfied if no significant increase in noise is seen in the wideband video signals or wideband servo error signals.

**Table 3.4.3-5 RS Test Frequencies and Field Strengths**

| Function | Frequency | Field Strength (50% Modulated with 1kHz signal) |
|---|---|---|
| DCPI Repeater | 468.800 MHz | 0.1V/meter |
| SAR Repeater | 1544.500 MHz | 1.0V/meter |
| Sensor Data | 1676.000 MHz | 1.0V/meter |
| MDL Data | 1681.480 MHz | 1.0V/meter |
| PDR Repeater | 1685.700 MHz | 1.0V/meter |
| WEFAX Repeater | 1691.000 MHz | 1.0V/meter |
| CDA Telemetry | 1694.000 MHz | 1.0V/meter |
| DCS Pilot Report | 1694.450 MHz | 1.0V/meter |
| DCPR Repeater (Domestic) | 1694.500 MHz | 1.0V/meter |
| DCPR Repeater (International) | 1694.800 MHz | 1.0V/meter |
| Telemetry DSN | 2208.586 MHz | 1.0V/meter |
| Telemetry DSN | 2209.086 MHz | 1.0V/meter |

3.4.3.8 Electrostatic Arc-Discharge Susceptibility (ESDS)

The spacecraft shall be designed to minimize the occurrence of ESD events on the instrument and shall not allow discharges greater than the maximum specified for the instrument.

The instrument shall be designed to withstand both a radiated and direct arc as shown in Table 3.4.3-6 without sustaining permanent damage. The direct arc-discharge can occur on any of the 5 exposed surfaces of the three instrument modules. Instrument operation shall not be impaired after the arc discharge.

**Table 3.4.3-6 ESDS Characteristics**

| Item | Description | Characteristics |
|---|---|---|
| 1 | Discharge Voltage | 10 kV |
| 2 | Discharge Energy | 3 millijoules maximum |
| 3 | Peak Current | 1 Amp |
| 4 | Time Constant | 600 nsec |
| 5 | Repetition Rate | 1 sec |

### 3.4.3.9 Magnetic Field Emissions

The spacecraft shall be able to tolerate the maximum changes in magnetic fields generated by the instrument.

The change in the magnetic field produced by the Electronics or Power Supply Modules, for any instrument mode, shall be less than 10 nanoTesla peak-to-peak, up to a single-pole lowpass bandwidth of 1.0 Hz, in any axis when measured at a distance of 1 meter from any face of either module.

The change in the magnetic field produced by the instrument Sensor Module, for any instrument mode, shall be less than 20 nanoTesla peak-to-peak, up to a single-pole lowpass bandwidth of 1 Hz, in any axis when measured at a distance of 1 meter from any face of the Sensor Module.

Magnetic field emissions from the instrument module harness shall be minimized by the twisting of high current wires with their respective return wires. Chassis currents shall be minimized by using high input impedance as defined in this ICD for the spacecraft to instrument signal interfaces.

### 3.4.3.10 Bonding and Grounding

The spacecraft and instrument shall allow bonding and grounding in compliance with MIL-B-5087 and MIL-STD-1541 and shall comply with the requirements of the Interface Control Drawings. All external electrically conductive surfaces, including thermal insulation and thermal control surfaces, shall have provision for grounding to the spacecraft structure.

## 3.5 Command and Data Handling

### 3.5.1 Commands

The spacecraft shall control instrument operations by providing commands to the instrument as shown in Figure 3.5.1-1. CU1 and CU2 represent the primary and redundant spacecraft Command Units respectively.

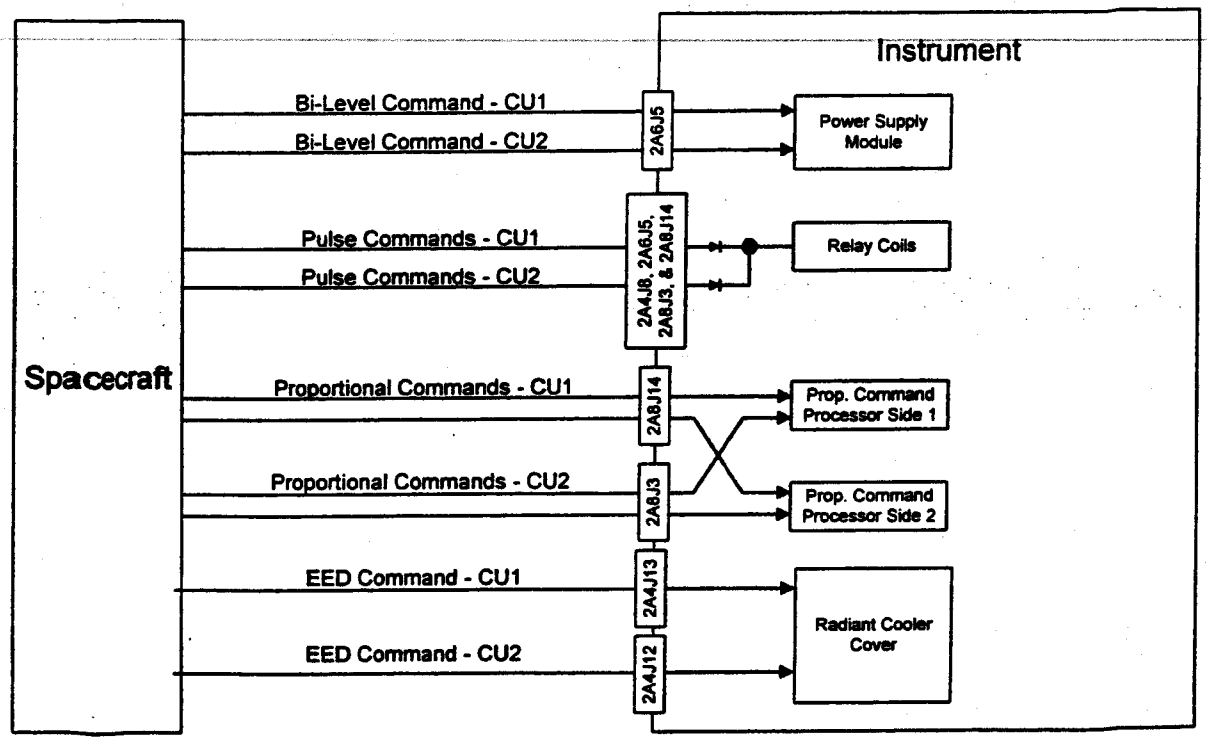


**Figure 3.5.1-1 Command Interface**

#### 3.5.1.1 Bi-Level Command (Electronics ON/OFF)

The spacecraft shall provide the instrument with a Bi-Level command (Electronics ON/OFF) to control the On/Off state of the Electronics Power Converter. The signal shall consist of a relay closure through a source impedance of 3 Kohm ± 10% to the Instrument Power Input to command the Electronics Converter ON. The instrument shall respond to Electronics ON/OFF signals from either command unit and shall continue to function should a single command unit fail in the open condition. The command interface circuitry shall be as shown in Figure 3.5.1-2.

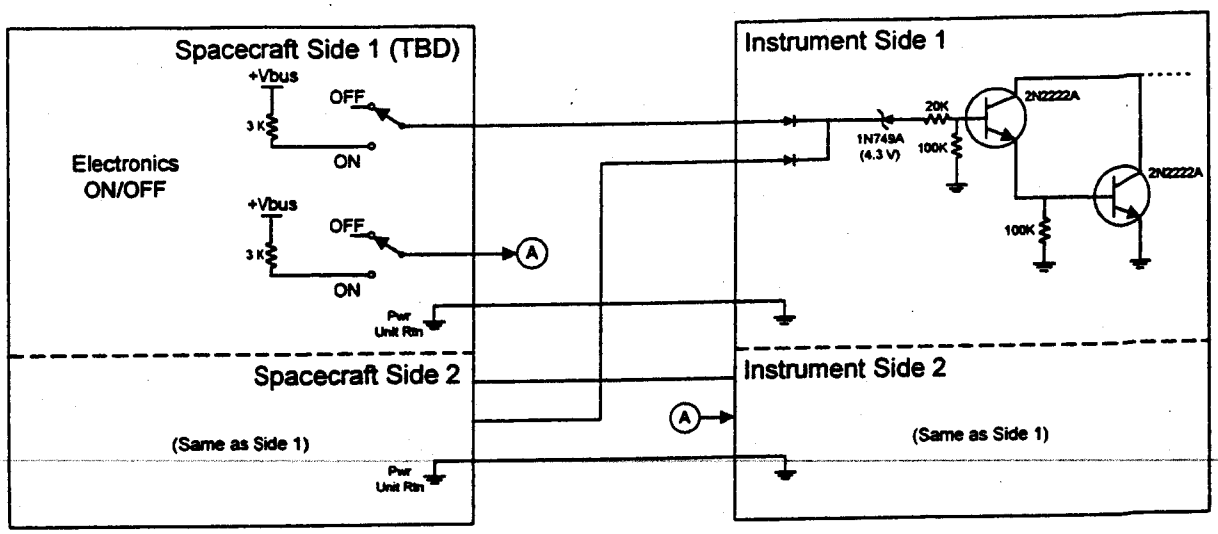


**Figure 3.5.1-2 Bi-Level Command Schematic**

### 3.5.1.2 Pulse Commands

The instrument shall respond to signal pulses from either command unit and shall continue to function should a single command unit fail in the Low condition. The Pulse Command interface circuitry shall be as shown in Figure 3.5.1-3. The spacecraft shall provide the pulse commands shown in Table 3.5.1-1.

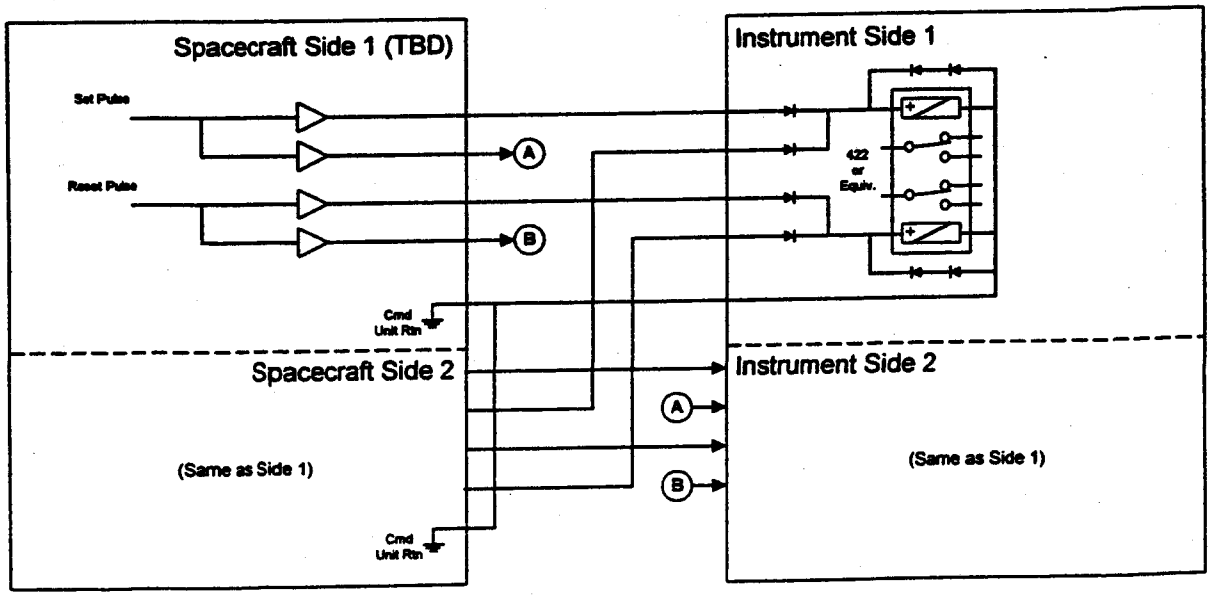


**Figure 3.5.1-3 Pulse Command Schematic**

**Table 3.5.1-1 Pulse Command List**

| Item | Command Signal | Description (For Reference) |
|---|---|---|
| 1 | Electronics Side 1 Select | Connects Instrument Power Input to side 1 power converters and electronics. Switching electronic sides shall only be possible when Instrument is OFF. |
| 2 | Electronics Side 2 Select | Connects Instrument Power Input to side 2 power converters and electronics. Switching electronic sides shall only be possible when Instrument is OFF. |
| 3 | Instrument ON | Connects Instrument Power Input to the dc/dc converters and provides power for standby mode. |
| 4 | Instrument OFF | Disconnects Instrument Power Input from the dc/dc converters & turns instrument off. |
| 5 | Scan Motor ON | Provides power to the scan motor. |
| 6 | Scan Motor OFF | Removes power from the scan motor. |
| 7 | Detector Bias ON | Provides bias power to PC infrared detectors. |
| 8 | Detector Bias OFF | Removes bias power from PC infrared detectors. |
| 9 | Patch Temp Control ON Low | Provides power to patch temperature control and selects lowest patch operational temperature. When energized after a Patch Temp High Select command, shall set mid level patch control temperature. |
| 10 | Patch Temp High Select | Selects highest patch operational temperature. |
| 11 | Patch Temp Control OFF | Removes power from the patch temperature control. |
| 12 | Thermal Control Heater No. 1 ON, Low | Powers Sensor Assembly baseplate heater No. 1 ON in low heat condition. |
| 13 | Thermal Control Heater No. 2 ON, Low | Powers Sensor Assembly baseplate heater No. 2 ON in low heat condition. |
| 14 | Thermal Control Heaters HIGH | Selects HIGH power for both baseplate heaters. |
| 15 | Thermal Control Heaters OFF | Removes power from both baseplate heaters. |
| 16 | Cooler Outgas Heat ON (Low) | Provides power to radiant cooler heaters and selects low power condition. When energized following a Cooler Outgas Heat (High) Select command, the outgas heat shall be terminated and the Anti-Contamination Heat energized. |
| 17 | Cooler Outgas Heat (High) Select | Selects high cooler outgas heat. |
| 18 | Cooler Outgas Heat OFF | Commands cooler outgas heater or Anti-Contamination heater power off. |
| 19 | Auto B.B. Calibrate Enable | Forces blackbody calibration at next end-of-frame or immediately if no frame in process. Restores automatic black- body calibration. |
| 20 | Auto B.B. Calibrate Inhibit | Inhibits automatic blackbody calibration sequence. |
| 21 | Space Look East | Selects East side of earth for space look. |
| 22 | Space Look West | Selects West side of earth for space look. |
| 23 | Scan Reset | Resets all scan commands to inactive condition and erases the information in the command registers. |

| Item | Command Signal | Description (For Reference) |
|---|---|---|
| 24 | Normal Frame Start | Starts normal frame or repeat sequence. |
| 25 | Priority 2 Frame Start | Starts priority 2 frame or repeat sequence. Has priority over a normal frame. |
| 26 | Priority 1 Frame Start | Starts priority 1 frame or repeat sequence. Has priority over a normal frame or priority 2 frame. |
| 27 | Star Frame Start | Starts star sense activity. Has priority over all other frames. |
| 28 | IMC Range Select High | Selects ±8 milliradian (optical) IMC compensation input range for N-S & E-W. |
| 29 | IMC Range Select Low | Selects ± 4 milliradian (optical) IMC compensation input range for N-S & E-W. |
| 30 | Filter Wheel Motor 1 ON | Provides power to Filter Wheel Motor No.1. Both Filter Wheel Motors may be powered simultaneously. |
| 31 | Filter Wheel Motor 2 ON | Provides power to Filter Wheel Motor No.2. Both Filter Wheel Motors may be powered simultaneously. |
| 32 | Filter Wheel Motor OFF | Removes power from the Filter Wheel Motors. |
| 33 | Filter Wheel Housing Thermal Control ON | Provides power to the Filter Wheel Housing temperature control circuit. |
| 34 | Filter Wheel Housing Thermal Control OFF | Removes power from the Filter Wheel Housing temperature control circuit. |
| 35 | Filter Wheel Cooler Outgas Heater ON | Provides power to the Filter Wheel Cooler Outgas Heater circuit. |
| 36 | Filter Wheel Cooler Outgas Heater ON | Removes power from the Filter Wheel Cooler Outgas Heater circuit. |

3.5.1.2.1 Pulse Command Signal Characteristics

The pulse command line shall have the signal characteristics shown in Table 3.5.1-2.

**Table 3.5.1-2 Pulse Command Signal Characteristics**

| Item | Description | Logic State | Characteristics |
|---|---|---|---|
| 1 | Voltage | 1 | Command present, 26 ±4 V dc, referenced to the signal return. |
| 2 | Current | 1 | 100 mA maximum |
| 3 | Source Impedance | 1 | 41 ohms maximum. |
| 4 | Voltage | 0 | 0.0 ±1.5 V dc. |
| 5 | Current | 0 | Diode isolated, minimal current. |
| 6 | Load Impedance | | 290 ohms minimum, 20 Kohms maximum. |
| 7 | Pulse Width | 1 | 40 msec minimum, and 100 msec nominal. |
| 8 | Pulse Rise Time | 1 | 100 microseconds maximum. |
| 9 | Pulse Fall Time | 1 | Diode isolated, determined by load characteristics. |
| 10 | Return Line Isolation | | The pulse signal return shall be isolated from primary power return by 100 Kohms. |
| 11 | Pulse Threshold | | The relays shall not respond at an input voltage less than 9.0 Vdc. |

3.5.1.3 Proportional Commands

The spacecraft shall provide scan frame information to the instrument via Proportional Commands. The proportional command signals shall be cross-strapped in each side of the receiving circuitry so as to operate from either side of the source circuitry. The Proportional Command interface circuitry shall be as shown in Figure 3.5.1-4. The redundant lines shall remain in the 'Zero' state.

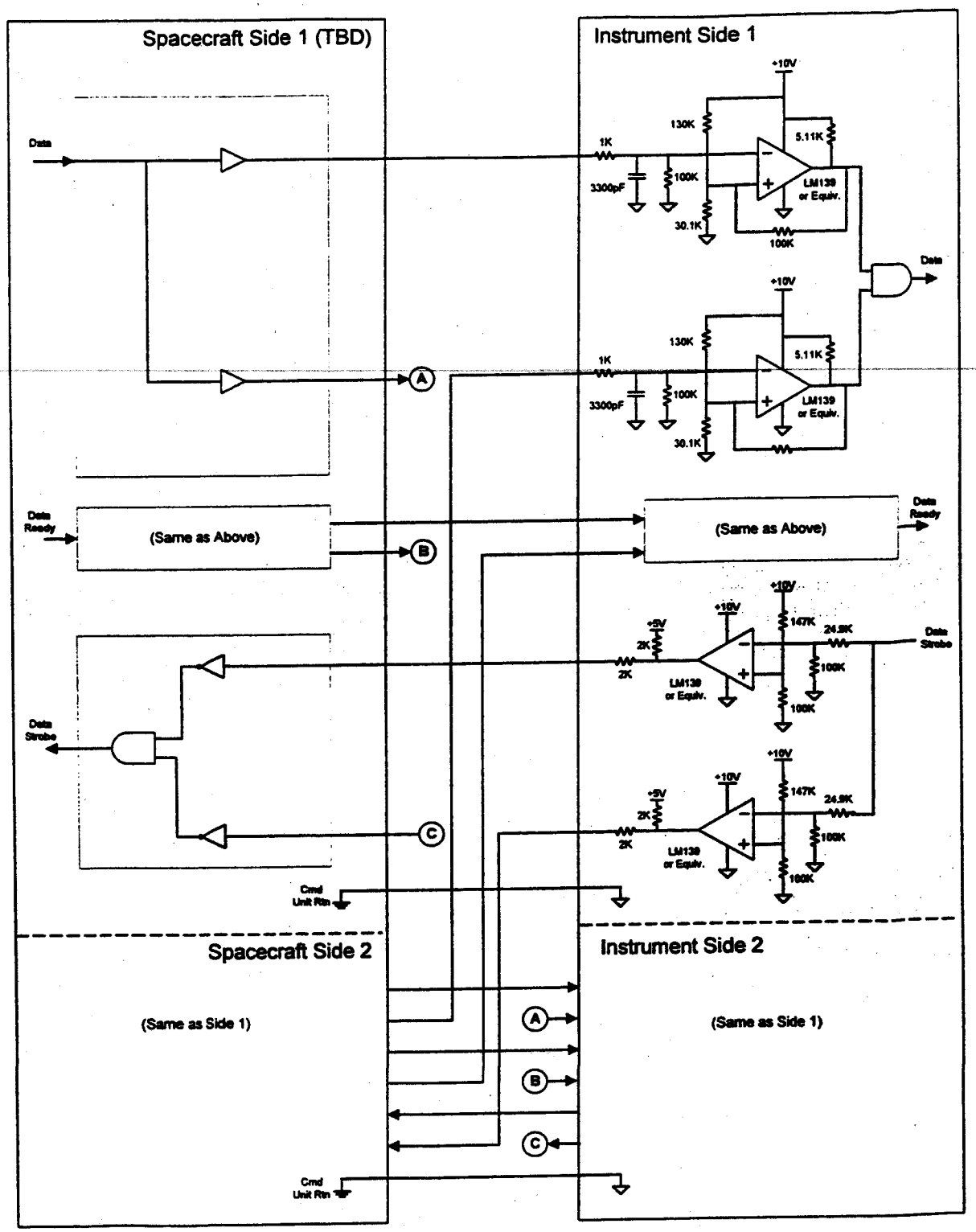


**Figure 3.5.1-4 Proportional Command Schematic**

The spacecraft shall provide the "Data" and "Data Ready" signals to the instrument. Upon receiving the "Data Ready" signal, the instrument shall provide a "Data Strobe" signal to the spacecraft. On the "Data Strobe" signal's rising edge, the instrument shall latch the "Data" and the spacecraft shall update the "Data". Figure 3.5.1-5 shows the timing diagram for the Proportional Command interface.

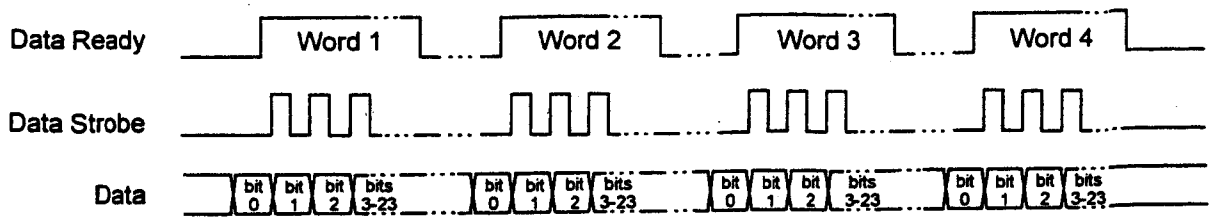


**Figure 3.5.1-5 Proportional Command Timing Diagram**

3.5.1.3.1 Proportional Command "Data" Signal Characteristics

The "Data" Signal shall have the characteristics shown in Table 3.5.1-3.

**Table 3.5.1-3 Proportional Command "Data" Signal Characteristics**

| Item | Description | Logic Level | State | Characteristics |
|---|---|---|---|---|
| 1 | Word Length | | | 24 bits |
| 2 | No. of Words per command message | | | 4 Words |
| 3 | Signal Level | 1<br>0 | | 4.35V to +5.35V<br>-0.2V to +0.6V |
| 4 | Source Impedance | 1<br>0 | | 3.7 Kohm max<br>1.2 Kohm max |
| 5 | Pulse Repetition Frequency | | | 1,000 - 10,000 Hz |
| 6 | Time Interval Between Words | | | 0.25 sec minimum |
| 7 | Rise/Fall Time | | | Less than 5 microseconds |
| 8 | Delay of data update relative to strobe (gated clock) pulses rising edge | | | 2 microseconds to 25 microseconds |
| 9 | Conducted Susceptibility | | | Refer to paragraph 3.4.3.4 and Table 3.4.3-2. |

3.5.1.3.2 Proportional Command "Data Ready" Signal Characteristics

A single data ready pulse shall be used for each command data word . First data bit shall be on the data line at start of Data Ready Signal. The "Data Ready" Signal shall have the characteristics shown in Table 3.5.1-4.

**Table 3.5.1-4 Proportional Command "Data Ready" Signal Characteristics**

| Item | Description | Logic Level | State | Characteristics |
|---|---|---|---|---|
| 1 | Waveform | | | Single pulse, during which time the data must be collected. |
| 2 | Pulse Width | | | 100ms ±5 ms. |
| 3 | Signal Level | 1<br>0 | Active<br>Inactive | +4.35V to +5.35V<br>-0.2V to +0.6V |
| 4 | Source Impedance | 1<br>0 | | 3.7 Kohms max<br>1.2 Kohms max |
| 5 | Time Between Pulses | | | 0.25 sec minimum |
| 6 | Time for 4 Data Words | | | 1.25 sec minimum. |
| 7 | Conducted Susceptibility: | | | Refer to paragraph 3.4.3.4 and Table 3.4.3-2. |

3.5.1.3.3 Proportional Command "Data Strobe" Signal Characteristics

The "Data Strobe" Signal shall have the characteristics shown in Table 3.5.1-5.

**Table 3.5.1-5 Proportional Command "Data Strobe" Signal Characteristics**

| Item | Description | Logic Level | State | Characteristics |
|---|---|---|---|---|
| 1 | Waveform | | | Square wave |
| 2 | No. of Pulses | | | 24 per command data Word |
| 3 | Signal Level | 1<br>0 | Active<br>Inactive | +4.5V to +5.5V<br>-0.2V +0.5V |
| 4 | Source Impedance | 1<br>0 | | 3.7 Kohm max.<br>1.2 Kohm max |
| 5 | Pulse Repetition Frequency | | | 1,000 - 10,000 Hz |
| 6 | Duty Cycle | | | 40% ±5% High, 60% ±5% Low |
| 7 | Delay of Leading Edge (0 to 1 transition) of first pulse from leading edge of Data Ready Pulse | | | 20 ms sec. max. |
| 8 | Rise/Fall Time | | | Less than 5 microseconds |
| 9 | Conducted Emissions | | | Refer to paragraph 3.4.3.4 and Table 3.4.3-1. |

### 3.5.1.3.4 Proportional Command Format

The Proportional Command Data shall be serially transmitted to the instrument in a command message format consisting of four sequential data words of 24 bits each. The four words shall be contiguous in order to maintain the correct definition of the individual bits. A transistor bi-level telemetry bit (Command Receipt Incomplete Status) shall be provided by the instrument to indicate when a complete four word command has been received. Once the command is loaded, the contents of the command registers (Command Echo) shall be included in the wideband data as part of the telemetry data block. Each header and trailer data block shall contain sufficient status information to indicate which of the four executed command registers (Normal, Priority 2, Priority 1, or Star) is active. The proportional commands shall have the format shown in Figure 3.5.1-6 and Table 3.5.1-6.

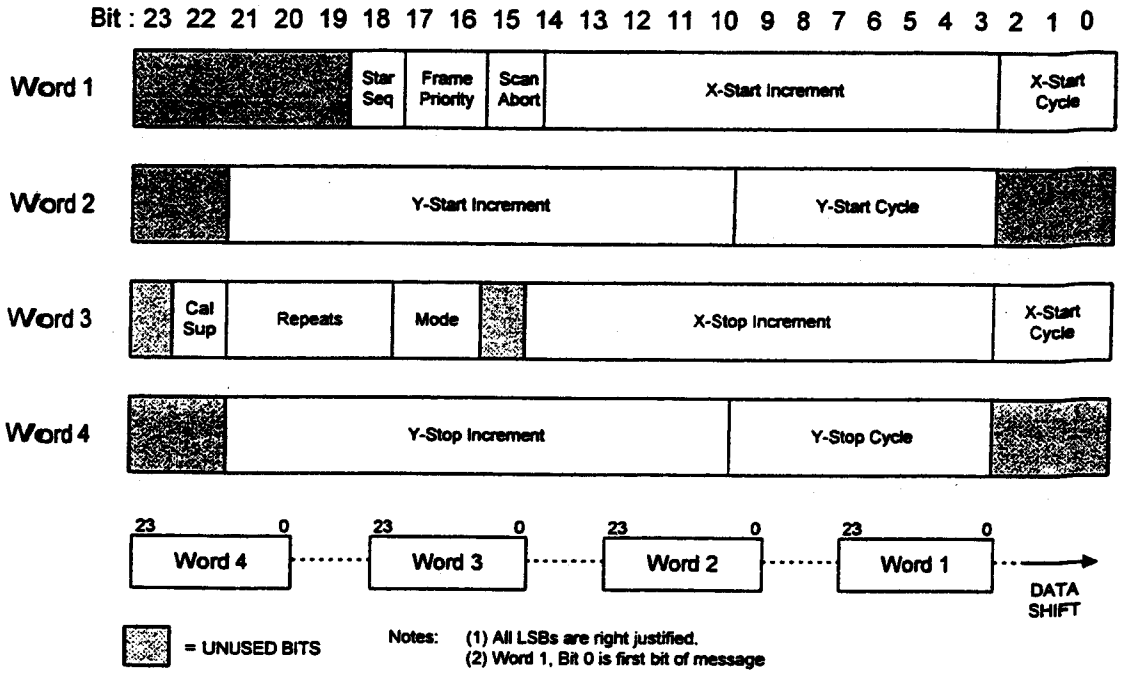


**Figure 3.5.1-6 Proportional Command Format**

**Table 3.5.1-6 Proportional Command Content**

| Item | Command Elements | Description |
|---|---|---|
| 1 | Star Sequence | Inhibits calibration to permit sequential star sensing. |
| 2 | Frame Priority | Defines the Frame Priority as:<br>Bit Number<br>17 16 Frame Priority<br>0 0 Normal<br>0 1 Priority 2<br>1 0 Priority 1<br>1 1 Star Sense |
| 3 | Scan Abort | Terminates all scanning action and returns the instrument to idle mode at nadir. Command register information is maintained. |
| 4 | X, Y Frame Start (Cycles, Increments) | Sets location for beginning of frame in x-axis (E-W) and in y-axis (N-S) |
| 6 | Blackbody Calibration Suppress | Force a BB Cal. before sounding frame and suppress BB Cal during Sounding Frame |
| 7 | Repeats | Sets number of repeats of a given image frame or star dwell interval |
| 8 | Scan Mode | Defines the scan mode as:<br>Bit Number<br>17 16 Scan Mode<br>0 0 Single Step (1120μradian), 0.1 Sec Dwell<br>0 1 Single Step (1120μradian), 0.2 Sec Dwell<br>1 0 Single Step (1120μradian), 0.4 Sec Dwell<br>1 1 Double Step (2240μradian), 0.1 Sec Dwell |
| 9 | X, Y Frame Stop (Cycles, Increments) | Sets location for end of frame in x-axis (E-W) and in y-axis (N-S) |

### 3.5.1.4 Electroexplosive Device (EED) Command

The spacecraft shall provide redundant EED commands to the instrument in order to energize an Electroexplosive Device (EED) which releases the spring loaded radiant cooler cover. Command verification shall be provided in the instrument's bi-level telemetry by sensing the cooler cover's status using position switches. Figure 3.5.1-7 is a schematic of the Command circuits.

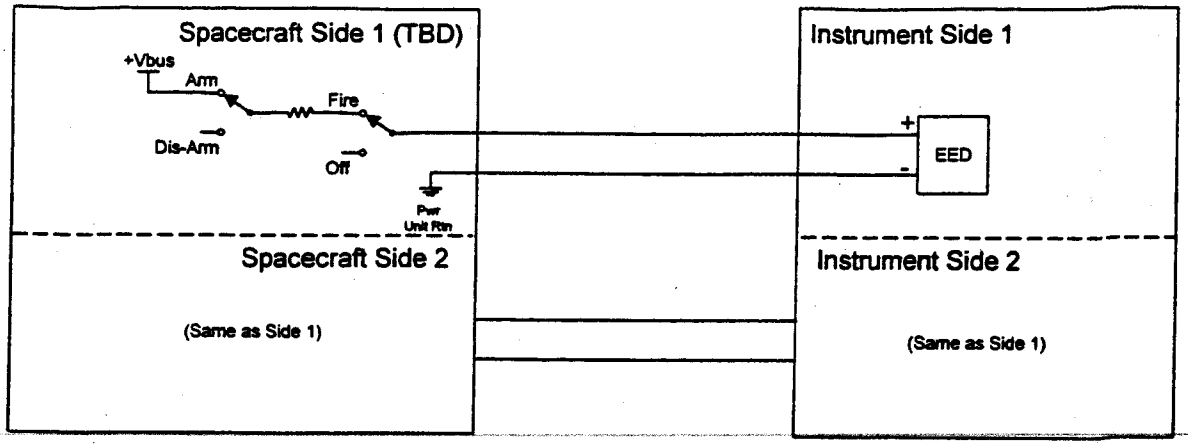


**Figure 3.5.1-7 EED Command Schematic**

### 3.5.2 Telemetry

The instrument shall provide the telemetry interfaces shown in Figure 3.5.2-1. The following sections define the requirements for the telemetry which interfaces directly to the spacecraft and not the status or housekeeping telemetry which is included in the wideband data.

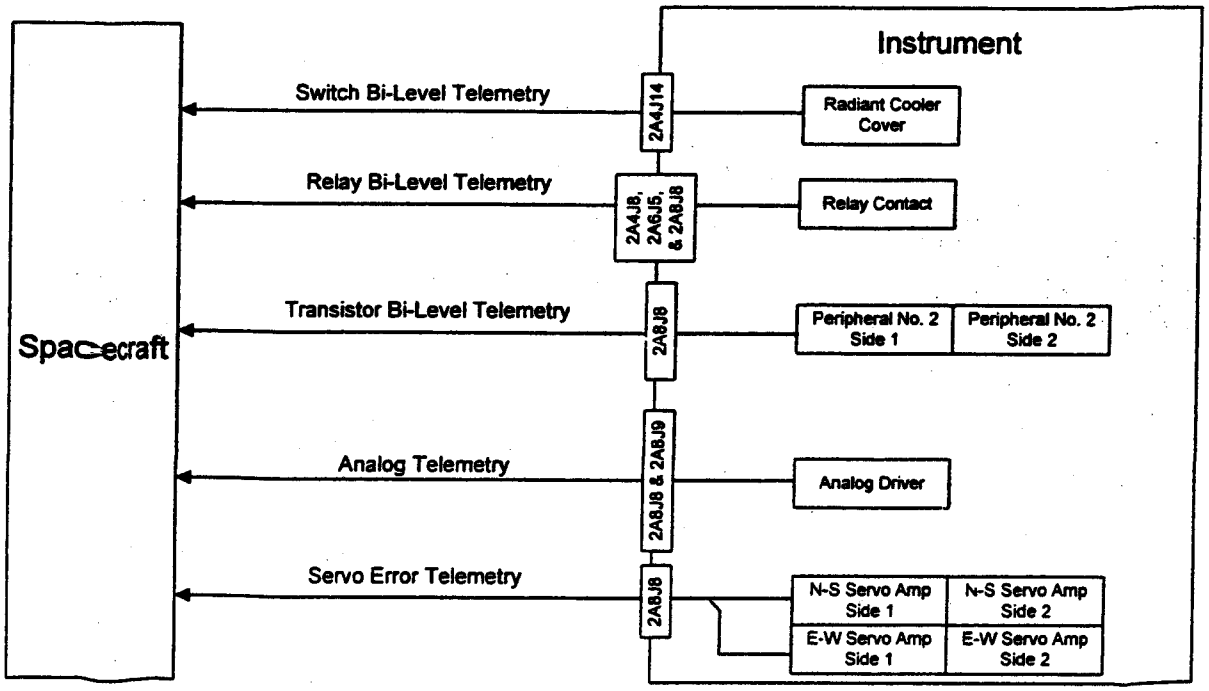


**Figure 3.5.2-1 Telemetry Interface**

### 3.5.2.1 Bi-Level Telemetry Outputs

Relay and Switch Bi-level and Transistor bi-level interfaces shall be provided as shown in Figure 3.5.2-2 and Figure 3.5.2-3, respectively.

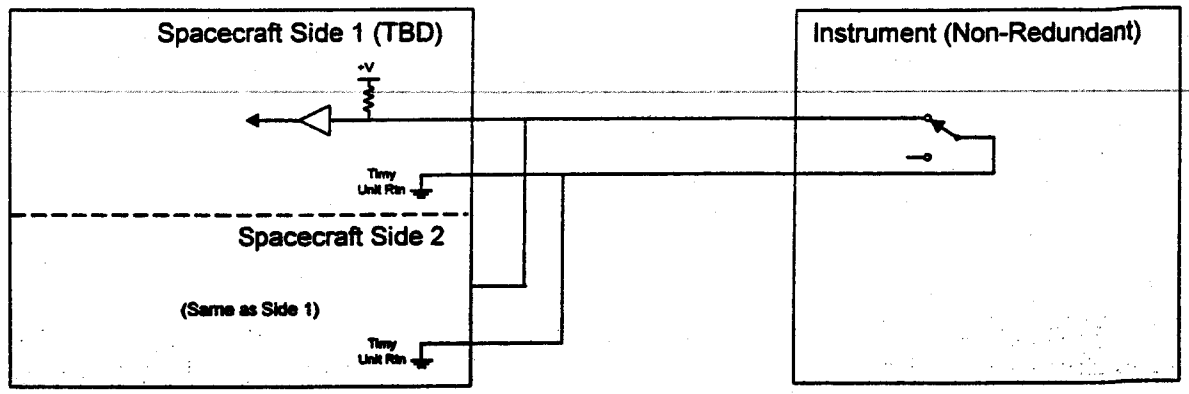


**Figure 3.5.2-2 Relay and Switch Bi-Level Telemetry Schematic**

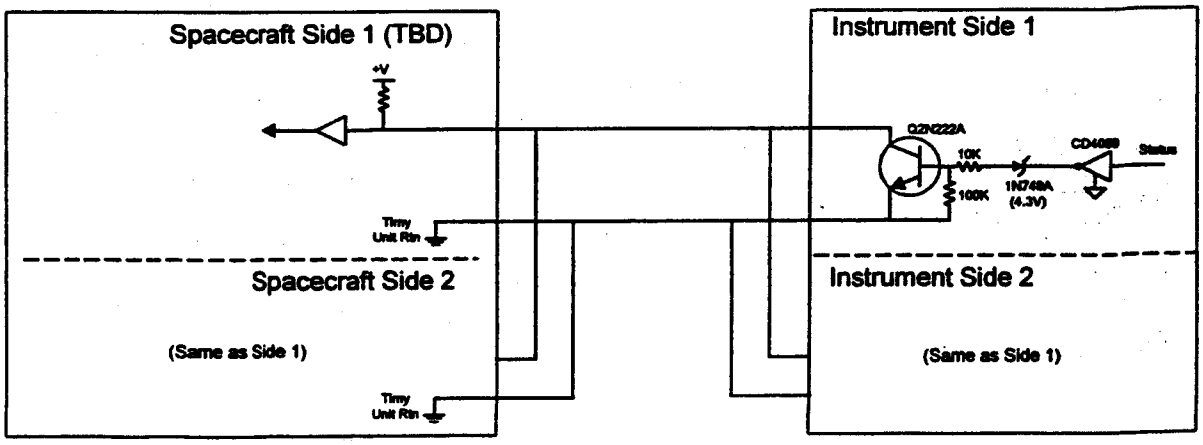


**Figure 3.5.2-3 Transistor Bi-Level Telemetry Schematic**

Bi-Level Telemetry outputs to the spacecraft shall be provided as defined in Table 3.5.2-1. Relay and Switch Bi-Level Telemetry shall be valid in all operating modes including Standby and Instrument OFF. Transistor Bi-Level Telemetry shall become Valid with the Electronics ON command.

**Table 3.5.2-1 Bi-Level Telemetry Output**

| Item | Telemetry Description | Source | Logic "0" | Logic "1" | Sampling Interval less than: |
|---|---|---|---|---|---|
| 1 | Cooler Cover Deployed Status | Switch | Deployed | Not Deployed | 10 sec |
| 2 | Cooler Cover Captured Status | Switch | Captured | Not Captured | 10 sec |
| 3 | Electronics Side 1/2 Select | Relay | Side-2 | Side-1 | 10 sec |
| 4 | Patch Control Heater ON/OFF Status | Relay | OFF | ON | 10 sec |
| 5 | Patch Temp Setpoint Select | Relay | Low OR Medium Temp Setpoint | High Temp Setpoint | 10 sec |
| 6 | Detector Bias ON/OFF Status | Relay | OFF | ON | 10 sec |
| 7 | Thermal Control #1 ON/OFF Status | Relay | OFF | ON | 10 sec |
| 8 | Thermal Control #2 ON/OFF Status | Relay | OFF | ON | 10 sec |
| 9 | Thermal Control HI/LOW Select | Relay | Low Power | High Power | 10 sec |
| 10 | Scan Motor ON/OFF Status | Relay | OFF | ON | 10 sec |
| 11 | Space Look E/W Select | Relay | West | East | 10 sec |
| 12 | IMC Range HI/LOW Select | Relay | Low Range | High Range | 10 sec |
| 13 | Cooler Outgas ON/OFF Status | Relay | OFF | ON | 10 sec |
| 14 | Cooler Outgas Select #1 | Relay | Low Power OR Anti-Ice ON | High Power | 10 sec |
| 15 | Instrument ON/OFF Status | Relay | OFF | ON | 10 sec |
| 16 | Filter Wheel Outgas Status | Relay | OFF | ON | 10 sec |
| 17 | Filter Wheel Cntl Htr Status | Relay | OFF | ON | 10 sec |
| 18 | Filter Wheel Motor #1 Status | Relay | OFF | ON | 10 sec |
| 19 | Filter Wheel Motor #2 Status | Relay | OFF | ON | 10 sec |
| 20 | BB Cal In Progress Status | Transistor | When settled at end location after end of BB Cal sequence. | When slew leaves space look and starts toward BB. | 1 sec |
| 21 | BB Cal Auto Status | Transistor | As soon as BB Cal Inhibit is received | When BB Cal Auto is active | 1 sec |
| 22 | Command Receipt Incomplete Status | Transistor | When fourth word (96th bit) is | When the first command word (1st | 1 sec |

| Item | Telemetry Description | Source | Logic "0" | Logic "1" | Sampling Interval less than: |
|---|---|---|---|---|---|
| | | | received | bit) is received | |
| 23 | Electronics ON/OFF Status | Transistor | When Electronics ON signal present | When Electronics OFF signal present | 1 sec |
| 24 | Frame Scan Status | Transistor | Only when at rest with no command active. | When in any scan condition (scan, calibrate, star sense) | 1 sec |
| 25 | Priority Frame Status | Transistor | When any other or no activity. | When a Priority Frame or Star Sense message is being acted upon. (At start of slew to star, etc.) | 1 sec |
| 26 | Scan Reset Status | Transistor | When next command message is received | When Scan Reset pulse is received | 1 sec |
| 27 | Space Look In Progress Status | Transistor | When starting next valid scan | At beginning of last spacelook. | 1 sec |
| 28 | Star Sense Mode Status | Transistor | All other times. | During all star frame activity, from start of motion to star location until end of active star data collection interval. | 1 sec |
| 29 | Command Transfer Suspended Status | Transistor | All other times. | When valid command message has been received but not transferred to assigned register. | 1 sec |
| 30 | Dwell Time Select #1 | Transistor | Single Step, 0.1 Sec OR 0.4 Sec | Single OR Double Step, 0.1 Sec OR 0.2 Sec | 1 sec |
| 31 | Dwell Time Select #2 | Transistor | Single Step, 0.1 Sec OR 0.2 Sec | Single OR Double Step, 0.1 Sec OR 0.4 Sec | 1 sec |

3.5.2.1.1 Relay and Switch Bi-Level Telemetry Signal Characteristics

Relay and Switch Bi-Level Telemetry shall be made available for spacecraft monitoring at all times. The Relay and Switch Bi-Level Telemetry provided by the instrument shall have the characteristics shown in Table 3.5.2-2.

**Table 3.5.2-2 Relay and Switch Bi-Level Telemetry Signal Characteristics**

| Item | Description | Logic State | Characteristics |
|---|---|---|---|
| 1 | Voltage Level | 1 | Open relay contact |
| 2 | Source Impedance | 1<br>0 | Greater than 1 Megaohm<br>500 ohms maximum. |
| 3 | Feedback Voltage (from Telemetry Unit) | 1 | +5.3 Vdc maximum, with a pull-up resistor of approximately 33 Kohms. |
| 4 | Voltage Level | 0 | -0.2 to +0.6 Vdc through closed relay contacts. |
| 5 | Current Feedback (from Telemetry Unit) | 0 | 1.0 mA maximum. |
| 6 | Sampling Interval | | See Table 3.5.2-1 Bi-Level Telemetry Output. |
| 7 | Contact Characteristics | | Gold contacts, closed impedance less than 100 ohms, end-of-life, at 50 microamperes test current. |
| 8 | Conducted Emissions | | Refer to paragraph 3.4.3.2 and Table 3.4.3-1. |
| 9 | Minimum of 2 TLM returns | | |

3.5.2.1.2 Transistor Bi-Level Telemetry Signal Characteristics

Transistor Bi-Level Telemetry provided by instrument electronics shall have the characteristics shown in Table 3.5.2-3.

**Table 3.5.2-3 Transistor Bi-Level Telemetry Signal Characteristics**

| Item | Description | Logic State | Characteristics |
|---|---|---|---|
| 1 | Voltage Level | 1<br>0 | Open transistor collector.<br>0 to +0.5 Vdc. |
| 2 | Sink Current | 0 | The source shall be able to sink up to 0.5 milliamperes. |
| 3 | Source Impedance | 1 | Greater than 1 Megaohm. |
| 4 | Sampling Interval | | See Table 3.5.2-1 Bi-Level Telemetry Output. |
| 5 | Feedback Voltage (From Telemetry Unit) | 1 | +5.3 Vdc maximum with a pull-up resistor of approximately 33 Kohm. |
| 6 | Conducted Emissions | | Refer to paragraph 3.4.3.2 and Table 3.4.3-1. |
| 7 | Rise and Fall Times | | TTL compatible, less than 5 microseconds. |
| 8 | Interface Circuit | | The drive circuit shall have the typical configuration shown in Figure 3.5.2-4. |

3.5.2.2 Analog Telemetry

The instrument shall monitor analog telemetry signals (temperatures, voltages, and currents) and provide Analog Telemetry outputs to the spacecraft. The output drive circuit shall be provided as shown in Figure 3.5.2-4.

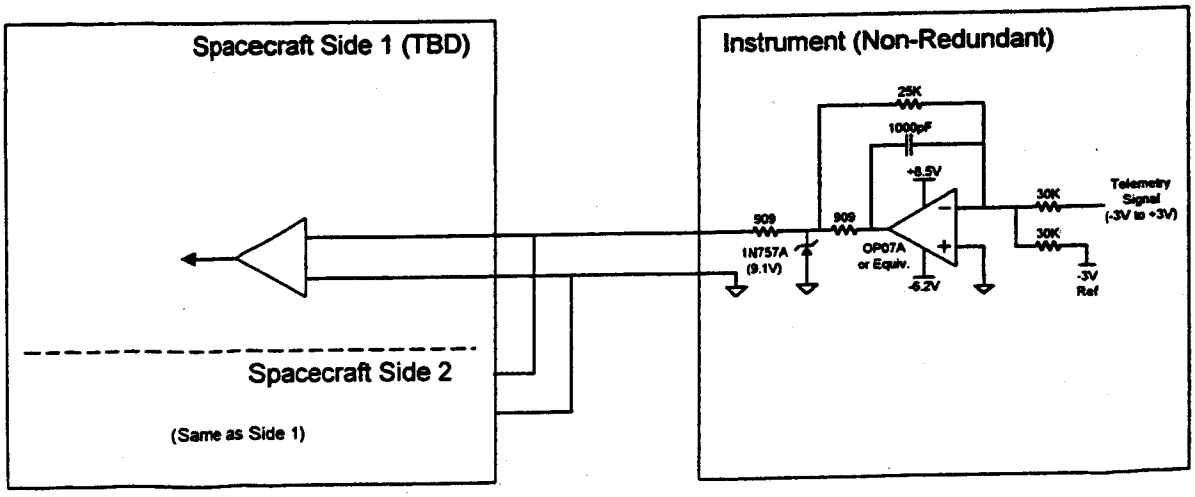


**Figure 3.5.2-4 Analog Telemetry Schematic**

Analog Telemetry outputs to the spacecraft shall be as defined in Table 3.5.2-4. These outputs in units of Volts will be converted by ground processing to engineering units (degree C., Kelvin, Amps, Volts) through the use of conversion equations and instrument unique telemetry coefficients provided by ITT. Listed for each telemetry function is the signal conditioning performed on the signal (buffered, switched, precision OR'd, & diode OR'd). Buffered functions provide the same output for both Side-1 and Side-2 operation. Switched, precision OR'd, and diode OR'd functions provide a different output depending on which instrument side is powered. The table also indicates the telemetry function's validity during the different operating modes.

**Table 3.5.2-4 Analog Telemetry**

| Item | Telemetry Description | Telemetry Signal Condition-ing | Instru-ment ON | Elec-tronics ON | Scan ON | Sampling Interval less than: |
|---|---|---|---|---|---|---|
| 1 | Electronics Temp #1 | Buffer | Valid | Valid | Valid | 60 sec |
| 2 | Electronics Temp #2 | Buffer | Valid | Valid | Valid | 60 sec |
| 3 | Power Supply Temp | Buffer | Valid | Valid | Valid | 60 sec |
| 4 | Sensor Assy Baseplate Temp #1 | Buffer | Valid | Valid | Valid | 60 sec |
| 5 | Blackbody Tgt Temp #5 (Side 1)<br>Blackbody Tgt Temp #1 (Side 2) | Switched | Valid | Valid | Valid | 60 sec |
| 6 | Blackbody Tgt Temp #6 (Side 1)<br>Blackbody Tgt Temp #2 (Side 2) | Switched | Valid | Valid | Valid | 60 sec |
| 7 | Blackbody Tgt Temp #7 (Side 1)<br>Blackbody Tgt Temp #3 (Side 2) | Switched | Valid | Valid | Valid | 60 sec |
| 8 | Blackbody Tgt Temp #8 (Side 1)<br>Blackbody Tgt Temp #4 (Side 2) | Switched | Valid | Valid | Valid | 60 sec |
| 9 | Telescope Primary Temp | Buffer | Valid | Valid | Valid | 10 sec |
| 10 | Telescope Secondary Temp #1 | Buffer | Valid | Valid | Valid | 1 sec |
| 11 | Telescope Secondary Temp #2 | Buffer | Valid | Valid | Valid | 1 sec |
| 12 | Telescope Secondary Temp #3 | Buffer | Valid | Valid | Valid | 1 sec |
| 13 | Scan Mirror Temp | Buffer | Valid | Valid | Valid | 10 sec |
| 14 | Visible Optics Temp | Buffer | Valid | Valid | Valid | 60 sec |
| 15 | Louver Radiator Temp | Buffer | Valid | Valid | Valid | 60 sec |
| 16 | Cooler Housing Temp | Buffer | Valid | Valid | Valid | 60 sec |
| 17 | Cooler Radiator Temp | Buffer | Valid | Valid | Valid | 60 sec |
| 18 | Cooler Patch Wide Range Temp | Buffer | Valid | Valid | Valid | 60 sec |
| 19 | Cooler Patch Narrow Range Temp | Buffer | Valid | Valid | Valid | 10 sec |
| 20 | Filter Wheel Motor Temp | Buffer | Valid | Valid | Valid | 60 sec |
| 21 | Filter Wheel Housing Temp | Buffer | Valid | Valid | Valid | 60 sec |
| 22 | Filter Wheel Radiator Temp | Buffer | Valid | Valid | Valid | 60 sec |
| 23 | Filter Wheel Motor Current #1<br>Filter Wheel Motor Current #2 | Precision OR'd | Larger Signal Valid | Larger Signal Valid | Larger Signal Valid | 1 sec |
| 24 | Filter Wheel Cntl Htr Volt (Side-1 or 2) | Precision OR'd | Invalid | Valid | Valid | 60 sec |
| 25 | Instrument Power Input Current | Buffer | Valid | Valid | Valid | 1 sec |

| Item | Telemetry Description | Telemetry Signal Condition-ing | Instru-ment ON | Elec-tronics ON | Scan ON | Sampling Interval less than: |
|---|---|---|---|---|---|---|
| 26 | E-W Servo Current (Side-1 or 2) | Precision OR'd | Invalid | Invalid | Valid | 1 sec |
| 27 | N-S Servo Current (Side-1 or 2) | Precision OR'd | Invalid | Invalid | Valid | 1 sec |
| 28 | Patch Control Heater Voltage | Buffer | Valid | Valid | Valid | 10 sec |
| 29 | Reference +10V #1 | Buffer | Valid | Valid | Valid | 60 sec |
| 30 | TLM +17V (Side-1 or 2) | Precision OR'd | Valid | Valid | Valid | 60 sec |
| 31 | TLM +11V (Side-1 or 2) | Diode OR'd | Valid | Valid | Valid | 60 sec |
| 32 | TLM -8V (Side-1 or 2) | Diode OR'd | Valid | Valid | Valid | 60 sec |
| 33 | Electronics +17V (Side-1 or 2) | Diode OR'd | Invalid | Valid | Valid | 60 sec |
| 34 | Electronics -17V (Side-1 or 2) | Diode OR'd | Invalid | Valid | Valid | 60 sec |
| 35 | Electronics +12V (Side-1 or 2) | Precision OR'd | Invalid | Valid | Valid | 60 sec |
| 36 | Electronics +8V1 (Side-1 or 2) | Diode OR'd | Invalid | Valid | Valid | 60 sec |
| 37 | Electronics +8V2 (Side-1 or 2) | Diode OR'd | Invalid | Valid | Valid | 60 sec |
| 38 | Electronics +8V3 (Side-1 or 2) | Precision OR'd | Invalid | Valid | Valid | 60 sec |
| 39 | Electronics -8V (Side-1 or 2) | Diode OR'd | Invalid | Valid | Valid | 60 sec |
| 40 | Servo +25V (Side-1 or 2) | Precision OR'd | Invalid | Invalid | Valid | 60 sec |
| 41 | Servo -25V (Side-1 or 2) | Precision OR'd | Invalid | Invalid | Valid | 60 sec |
| 42 | Servo +9V (Side-1 or 2) | Precision OR'd | Invalid | Invalid | Valid | 60 sec |
| 43 | Servo -9V (Side-1 or 2) | Precision OR'd | Invalid | Invalid | Valid | 60 sec |
| 44 | Servo +7V1 (Side-1 or 2) | Precision OR'd | Invalid | Invalid | Valid | 60 sec |
| 45 | Servo +7V2 (Side-1 or 2) | Precision OR'd | Invalid | Invalid | Valid | 60 sec |

3.5.2.2.1 Analog Telemetry Signal Characteristics

The instrument shall provide Analog Telemetry signals with the characteristics shown in Table 3.5.2-5.

**Table 3.5.2-5 Analog Telemetry Signals Characteristics**

| Item | Description | Characteristics |
|---|---|---|
| 1 | Signal Voltage Range | The instrument output signal level shall be within a range of 0.02 to +5.0 Vdc, referenced to the signal return. |
| 2 | Quantization | The spacecraft shall quantize the analog telemetry to 8-bits minimum. |
| 3 | Sampling Interval | See Table 3.5.2-4 Analog Telemetry. |
| 4 | Input Resistance | The spacecraft telemetry unit shall have an input resistance of 5 Megaohms minimum. |
| 5 | Source Impedance | The output impedance of the instrument shall not exceed 1,000 ohms resistive and 0.01 microfarad of shunt capacitance. |
| 6 | Common Mode Voltage | The instantaneous common mode voltage between the signal return line and the secondary power return shall not exceed the range of -1.0 to +4.5 Vdc. |
| 7 | Overvoltage | Because of possible malfunction of the source, the output line to the TLM Unit shall have limiting circuitry so as not to exceed the range of -1.0 to +11.0 Vdc. |
| 8 | Conducted Emissions | Refer to paragraph 3.4.3.2 and Table 3.4.3-1. |

3.5.2.3 Servo Error Telemetry (to Multi-use Data Link)

The instrument shall provide Servo Error Telemetry as shown in Figure 3.5.2-5.

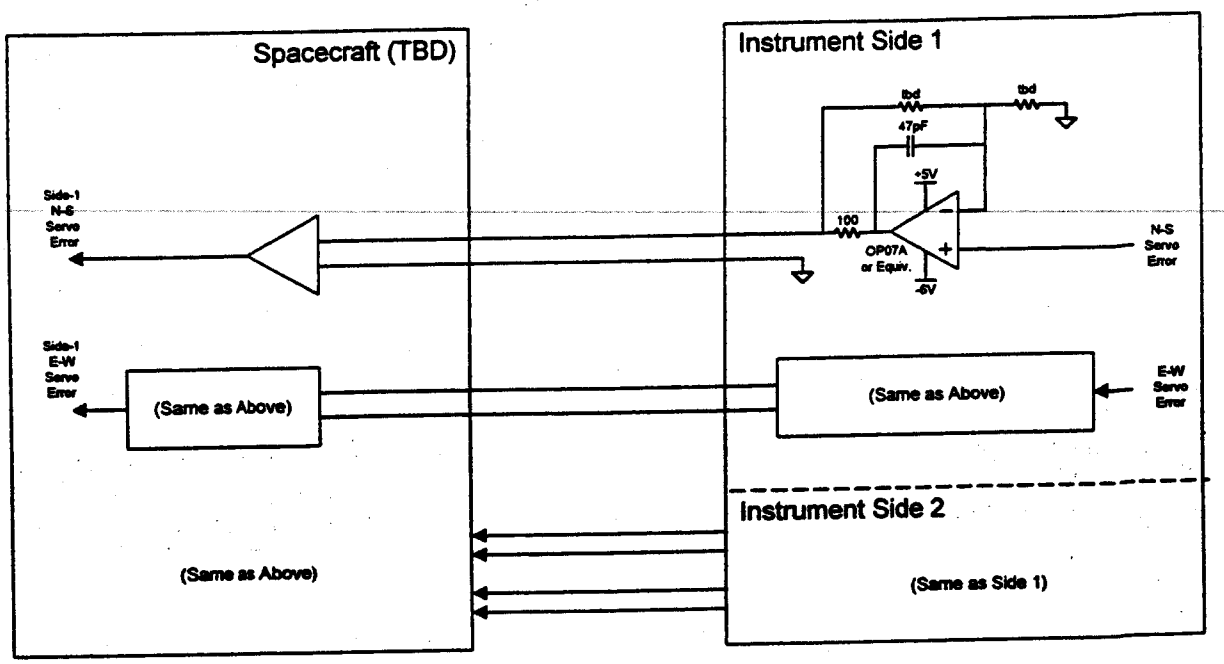


**Figure 3.5.2-5 Servo Error Telemetry Schematic**

The Servo Error Telemetry signals shall be sent to the spacecraft's Multi-use Data Link (MDL) unit and shall be defined as shown in Table 3.5.2-6.

**Table 3.5.2-6 Servo Error**

| Item | Telemetry Description | Telemetry Signal Conditioning | Side-1 or 2 Standby | Side-1 | Side-2 |
|---|---|---|---|---|---|
| 1 | E-W Servo Error (Side-1) | Buffer | Invalid | Valid | Invalid |
| 2 | N-S Servo Error (Side-1) | Buffer | Invalid | Valid | Invalid |
| 3 | E-W Servo Error (Side-2) | Buffer | Invalid | Invalid | Valid |
| 4 | N-S Servo Error (Side-2) | Buffer | Invalid | Invalid | Valid |

3.5.2.3.1 Servo Error Telemetry Signal Characteristics

The Servo Error Telemetry shall be provided by the instrument and shall have the characteristics shown in Table 3.5.2-7.

**Table 3.5.2-7 Servo Error Telemetry Characteristics**

| Item | Description | Characteristics |
|---|---|---|
| 1 | Signal Voltage Range | The instrument output signal level shall be within a range of -3.5 volts to +3.5 volts, referenced to the signal return. |
| 2 | Quantization | The spacecraft shall quantize the servo error signals to 10-bits minimum. |
| 3 | Sample Rate | The spacecraft shall sample each servo error signal at 400 Hz minimum. |
| 4 | Signal Bandwidth | 1.2 kHz |
| 5 | Input Resistance | The spacecraft MDL unit shall have an input resistance of 5 Megaohms minimum. |
| 6 | Source Impedance | The output impedance shall be less than 10 ohms. |
| 7 | Common Mode Voltage | The instantaneous common mode voltage between the signal return line and the secondary power return shall not exceed the range of -1.0 to +4.5 Vdc. |
| 8 | DC Scale Factor | The instrument output signal's DC Scale Factor shall be 11.7 +0.6 mV/microradian (optical). |

3.5.3 Wideband Data (Science Data)

The Wideband Data output shall be redundant. The Wideband Data output shall be a constant rate (40,000 bits / sec) transformer coupled serial output. The Wideband Data interface shall be as shown in Figure 3.5.3-1.

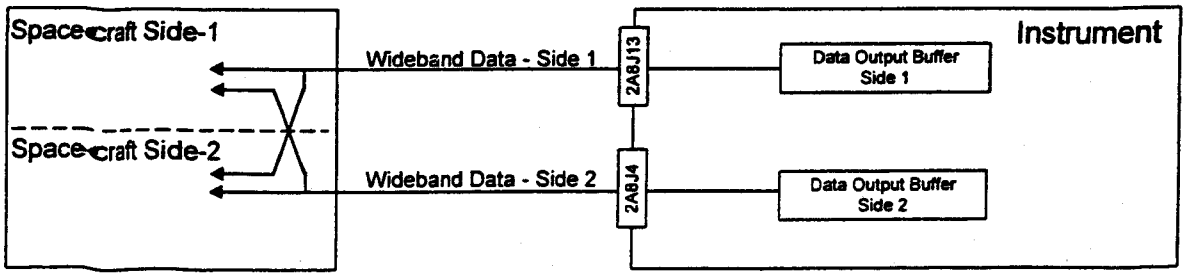


**Figure 3.5.3-1 Wideband Data Interface**

Figure 3.5.3-2 shows the data processing to be done prior to the data being output to the spacecraft. A Pseudo Noise (PN) Code shall be generated by the 13-bit shift register, exclusive OR feedback, and seed word shown in Figure

3.5.3-2. The seed word shall be inserted at the beginning of every data block. The Wideband Data shall be exclusive OR'd with the PN Code and then NRZ-S encoded prior to being sent to the output transformer.

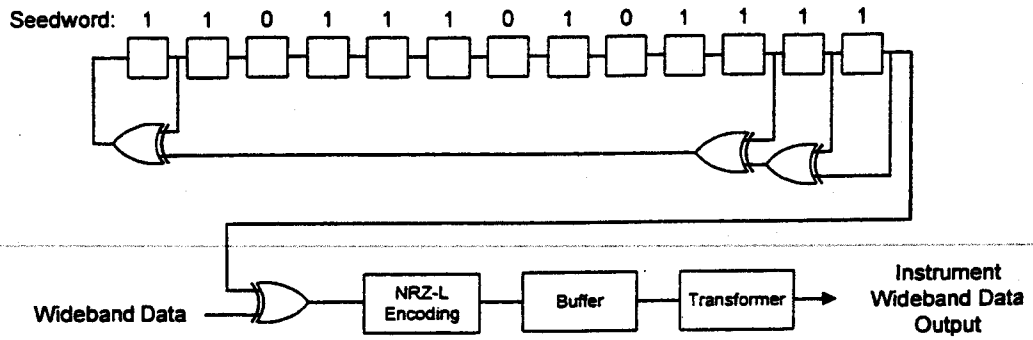


**Figure 3.5.3-2 Wideband Data Processing**

The Wideband Data circuitry shall be shown in Figure 3.5.3-3.

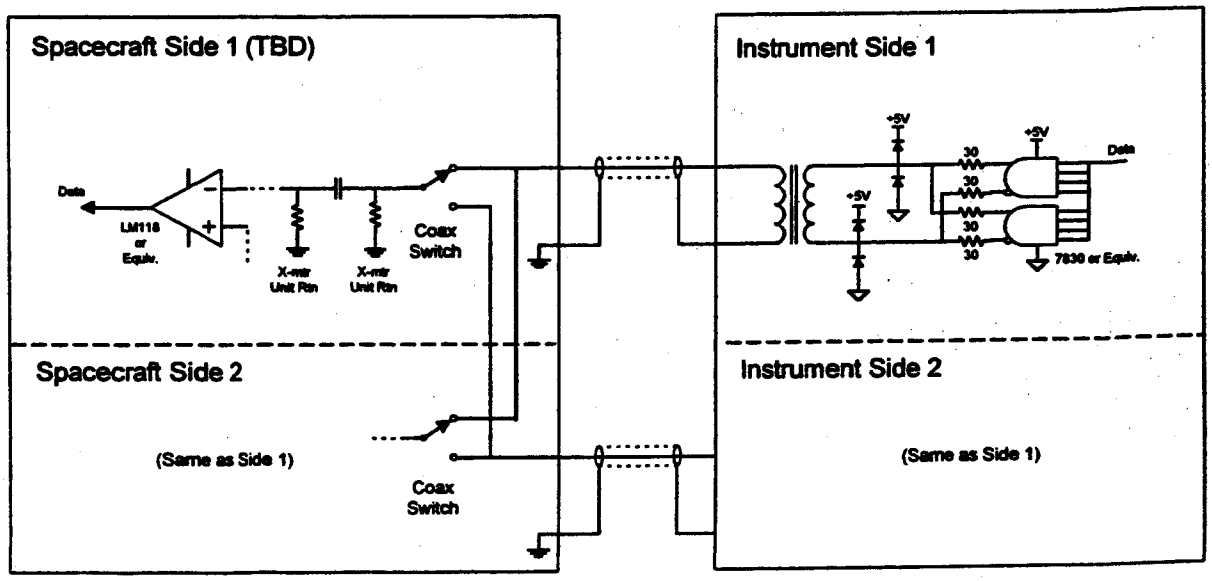


**Figure 3.5.3-3 Wideband Data Schematic**

3.5.3.1 Wideband Data Signal Characteristics

The serial data stream shall be present on one of two separate coaxial connectors (one for each redundant output data channel). The Wideband Data signals shall have the signal characteristics shown in Table 3.5.3-1.

**Table 3.5.3-1 Wideband Data Interface and Signal Characteristics**

| Item | Description | Characteristics |
|---|---|---|
| 1 | Data Rate | 40,000 bits/sec +/-60ppm at 18°C. |
| 2 | Short Term Stability | Shall be ≤ 5 part per $10^7$ over 1.2 seconds. |
| 3 | Long Term Stability | Shall be ≤ +/- 100 ppm over mission temperature range. |
| 4 | Load Resistance | 50 Ohms. |
| 5 | Output Voltage | 3.3 V to 4.7V peak to peak over temperature and life. |
| 6 | Voltage Droop | Shall be ≤ 2%. |
| 7 | Symbol Asymmetry | Shall be ≤ 1%. |
| 8 | Rise and Fall Times | Shall be < 10% of symbol period. |
| 9 | Conducted Emissions | Refer to paragraph 3.4.3.2 and Table 3.4.3-1. |

3.5.3.2 3.5.3 Wideband Data Format

This section is a definition of Wideband Data for information only and is not a requirement on the spacecraft or the instrument. The instrument's Wideband Data Output shall consist of a single sounding data block type. The data block shall contain 250 words. The first 249 words shall be a fixed length of 16-bits each and the last (blank) word shall be of variable length. Table 3.5.3-2 summarizes the data contained in the data output. The detailed Format is shown in Appendix A of this document.

**Table 3.5.3-2 Data Block Summary**

| Item | Data | Number of 16-bit Words |
|---|---|---|
| 1 | Synchronization Data (zeros plus PN coding) | 4 |
| 2 | Command Status | 3 |
| 3 | Present Scan Address | 4 |
| 4 | BB Cal Timer | 3 |
| 5 | Command Echo | 11 |
| 6 | Spacecraft Attitude Data | 11 |
| 7 | Status Telemetry | 2 |
| 8 | Housekeeping Telemetry | 79 |
| 9 | Star Sense Channel Data | 32 |
| 10 | Sounding Data (Visible and IR Channels) | 76 |
| 11 | Spare | 24 |
| 12 | Blank (Variable Length) | 1 |
| | | |
| | Total Words: | 250 |

### 3.5.3.3 Wideband Status Telemetry Content

This section is a definition of Wideband Data for information only and is not a requirement on the spacecraft or the instrument.

The Wideband Status Telemetry content shall be provided as shown in Table 3.5.3-3. The telemetry functions listed in Table 3.5.3-3 shall be Valid in all operational modes (Side-1 & Side-2) except for Standby when the Wideband Data output is unavailable.

**Table 3.5.3-3 Wideband Status Telemetry**

| Item | Telemetry Description | Common or Selected Side | Logic "0" | Logic "1" |
|---|---|---|---|---|
| 1 | Cooler Patch Overtemp Status | Common | Overtemperature | Undertemperature |
| 2 | Cooler Radiator Overtemp Status | Common | Overtemperature | Undertemperature |
| 3 | Cooler Housing Overtemp Status | Common | Overtemperature | Undertemperature |
| 4 | Electronics Side 1/2 Select | Common | Side-1 | Side-2 |
| 5 | Patch Control Heater ON/OFF Status | Common | ON | OFF |
| 6 | Patch Temp Setpoint Select #1 | Common | High Temp Setpoint | Low OR Medium Temp Setpoint |
| 7 | Patch Temp Setpoint Select #2 | Common | High OR Medium Temp Setpoint | Low Temp Setpoint |
| 8 | Detector Bias #1 ON/OFF Status | Common | ON | OFF |
| 9 | Detector Bias #2 ON/OFF Status | Common | ON | OFF |
| 10 | Detector Bias #3 ON/OFF Status | Common | ON | OFF |
| 11 | Detector Bias #4 ON/OFF Status | Common | ON | OFF |
| 12 | Thermal Control #1 ON/OFF Status | Common | ON | OFF |
| 13 | Thermal Control #2 ON/OFF Status | Common | ON | OFF |
| 14 | Thermal Control HI/LOW Select | Common | High Power | Low Power |
| 15 | Scan Motor ON/OFF Status | Selected Side | ON | OFF |
| 16 | Space Look E/W Select | Selected Side | East | West |
| 17 | IMC Range HI/LOW Select | Selected Side | High Range | Low Range |
| 18 | Cooler Outgas ON/OFF Status | Common | ON | OFF |
| 19 | Cooler Outgas Select #1 | Common | High Power | Low Power OR Anti-Ice ON |
| 20 | Cooler Outgas Select #2 | Common | Anti-Ice ON | High Power OR Low Power |
| 21 | Filter Wheel Motor #1 ON/OFF Status | Common | ON | OFF |
| 22 | Filter Wheel Motor #2 ON/OFF Status | Common | ON | OFF |
| 23 | Filter Wheel Cntl Htr ON/OFF Status | Common | ON | OFF |
| 24 | Filter Wheel Outgas ON/OFF Status | Common | ON | OFF |

3.5.3.4 Wideband Housekeeping Telemetry Content

This section is a definition of Wideband Data for information only and is not a requirement on the spacecraft or the instrument.

The Wideband Housekeeping Telemetry Content shall be provided as defined in Table 3.5.3-4. These outputs in units of Counts will be converted by ground processing to engineering units (degree C., Kelvin, Amps, Volts, microradians) through the use of conversion equations and instrument unique telemetry coefficients provided by ITT. The table shows when each telemetry data function is Valid or Invalid in reference to the different operating modes. The telemetry functions listed in this table shall be Valid in all operational modes (Side-1 & Side-2) except for Standby when the Wideband Data output shall not be available.

**Table 3.5.3-4 Wideband Housekeeping Telemetry**

| Item | Telemetry Description | Common or Selected Side | Electronics ON | Scan ON |
|---|---|---|---|---|
| 1 | E-W Servo Error | Selected Side | Invalid | Valid |
| 2 | N-S Servo Error | Selected Side | Invalid | Valid |
| 3 | E-W IMC Input | Selected Side | Invalid | Valid |
| 4 | N-S IMC Input | Selected Side | Invalid | Valid |
| 5 | E-Cal Input Voltage | Selected Side | Valid | Valid |
| 6 | Electronics Temp #1 | Common | Valid | Valid |
| 7 | Electronics Temp #2 | Common | Valid | Valid |
| 8 | Power Supply Temp | Common | Valid | Valid |
| 9 | Sensor Assy Baseplate Temp #1 | Common | Valid | Valid |
| 10 | Sensor Assy Baseplate Temp #2 | Common | Valid | Valid |
| 11 | Sensor Assy Baseplate Temp #3 | Common | Valid | Valid |
| 12 | Sensor Assy Baseplate Temp #4 | Common | Valid | Valid |
| 13 | Sensor Assy Baseplate Temp #5 | Common | Valid | Valid |
| 14 | Sensor Assy Baseplate Temp #6 | Common | Valid | Valid |
| 15 | Blackbody Tgt Temp #1 | Common | Valid | Valid |
| 16 | Blackbody Tgt Temp #2 | Common | Valid | Valid |
| 17 | Blackbody Tgt Temp #3 | Common | Valid | Valid |
| 18 | Blackbody Tgt Temp #4 | Common | Valid | Valid |
| 19 | Blackbody Tgt Temp #5 | Common | Valid | Valid |
| 20 | Blackbody Tgt Temp #6 | Common | Valid | Valid |
| 21 | Blackbody Tgt Temp #7 | Common | Valid | Valid |
| 22 | Blackbody Tgt Temp #8 | Common | Valid | Valid |
| 23 | Telescope Primary Temp | Common | Valid | Valid |
| 24 | Telescope Secondary Temp #1 | Common | Valid | Valid |
| 25 | Telescope Secondary Temp #2 | Common | Valid | Valid |
| 26 | Telescope Secondary Temp #3 | Common | Valid | Valid |

| Item | Telemetry Description | Common or Selected Side | Electronics ON | Scan ON |
|---|---|---|---|---|
| 27 | Primary Baffle Temp #1 | Common | Valid | Valid |
| 28 | Primary Baffle Temp #2 | Common | Valid | Valid |
| 29 | Scan Mirror Temp | Common | Valid | Valid |
| 30 | Visible Optics Temp | Common | Valid | Valid |
| 31 | Louver Radiator Temp | Common | Valid | Valid |
| 32 | Cooler Housing Temp | Common | Valid | Valid |
| 33 | Cooler Radiator Temp | Common | Valid | Valid |
| 34 | Cooler Patch Wide Range Temp | Common | Valid | Valid |
| ~~35~~ | ~~Cooler Patch Narrow Range Temp~~ | ~~Common~~ | ~~Valid~~ | ~~Valid~~ |
| 36 | Filter Wheel Motor Temp | Common | Valid | Valid |
| 37 | Filter Wheel Housing Temp | Common | Valid | Valid |
| 38 | Filter Wheel Radiator Temp | Common | Valid | Valid |
| 39 | Filter Wheel Motor Current #1 | Common | Valid when FW is ON | Valid when FW is ON |
| 40 | Filter Wheel Motor Current #2 | Common | Valid when FW is ON | Valid when FW is ON |
| 41 | Instrument Power Input Current | Common | Valid | Valid |
| 42 | Thermal Control Current #1 | Common | Valid | Valid |
| 43 | Thermal Control Current #2 | Common | Valid | Valid |
| 44 | Thermal Control Current #3 | Common | Valid | Valid |
| 45 | Thermal Control Current #4 | Common | Valid | Valid |
| 46 | Thermal Control Current #5 | Common | Valid | Valid |
| 47 | Thermal Control Current #6 | Common | Valid | Valid |
| 48 | E-W Servo Current | Selected Side | Invalid | Valid |
| 49 | N-S Servo Current | Selected Side | Invalid | Valid |
| 50 | Heater Power Input Voltage | Common | Valid | Valid |
| 51 | Patch Control Heater Voltage | Common | Valid | Valid |
| 52 | Signal Ground | Common | Valid | Valid |
| 53 | TLM OR'd +40V | Common | Valid | Valid |
| 54 | Reference Voltage +10V#1 | Common | Valid | Valid |
| 55 | Filter Wheel Control Htr Voltage | Selected Side | Valid when FW is ON | Valid when FW is ON |
| 56 | TLM +17V | Selected Side | Valid | Valid |
| 57 | TLM +11V | Selected Side | Valid | Valid |
| 58 | TLM -8V | Selected Side | Valid | Valid |
| 59 | Electronics +17V | Selected Side | Valid | Valid |
| 60 | Electronics -17V | Selected Side | Valid | Valid |
| 61 | Electronics +12V | Selected Side | Valid | Valid |
| 62 | Electronics +8V1 | Selected Side | Valid | Valid |
| 63 | Electronics +8V2 | Selected Side | Valid | Valid |
| 64 | Electronics +8V3 | Selected Side | Valid | Valid |
| 65 | Electronics -8V | Selected Side | Valid | Valid |
| 66 | Servo +25V | Selected Side | Invalid | Valid |
| 67 | Servo -25V | Selected Side | Invalid | Valid |

| Item | Telemetry Description | Common or Selected Side | Electronics ON | Scan ON |
|---|---|---|---|---|
| 68 | Servo +9V | Selected Side | Invalid | Valid |
| 69 | Servo -9V | Selected Side | Invalid | Valid |
| 70 | Servo +7V1 | Selected Side | Invalid | Valid |
| 71 | Servo +7V2 | Selected Side | Invalid | Valid |
| 72 | Filter Wheel +18V #1 | Common | Valid when FW is ON | Valid when FW is ON |
| 73 | Filter Wheel +18V #2 | Common | Valid when FW is ON | Valid when FW is ON |

3.5.3.5 Wideband Data Sample to Scan Coordinates Alignment Definition

This section is a definition of Wideband Data for information only and is not a requirement on the spacecraft or the instrument.

The visible and IR samples are co-registered with one another at 4 IFOV positions as shown by the scan pattern in Figure 3.5.3-4. IFOVs 1 and 3 are shifted in the East-West direction from IFOVs 2 and 4, resulting in an overscan at each end of the scan line. The ground processing will remove the overscan.

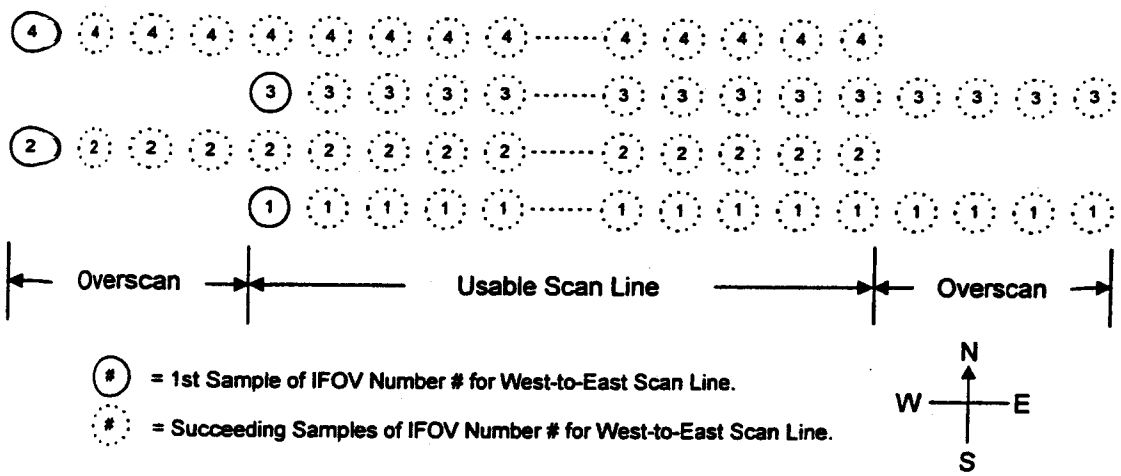


**Figure 3.5.3-4 Scan Pattern**

### 3.5.4 Image Navigation and Registration (INR) Interface

The INR system shall interface to the instrument as shown in Figure 3.5.4-1. The Instrument provides the capability to echo spacecraft attitude data from the INR system in the wideband data stream. The instrument shall move the scan mirror in response to the Image Motion Compensation (IMC) signals from the spacecraft. The instrument shall provide feedback to the spacecraft in the form of Mirror Position and Scan Status. INR1 and INR2 represent the primary and redundant spacecraft Image Navigation and Registration units, respectively. One signal return is provided from each INR unit to the instrument. All INR interfaces with the instrument share this single signal return as shown by the dashed line in Figure 3.5.4-2, Figure 3.5.4-4, Figure 3.5.4-5, and Figure 3.5.4-8.

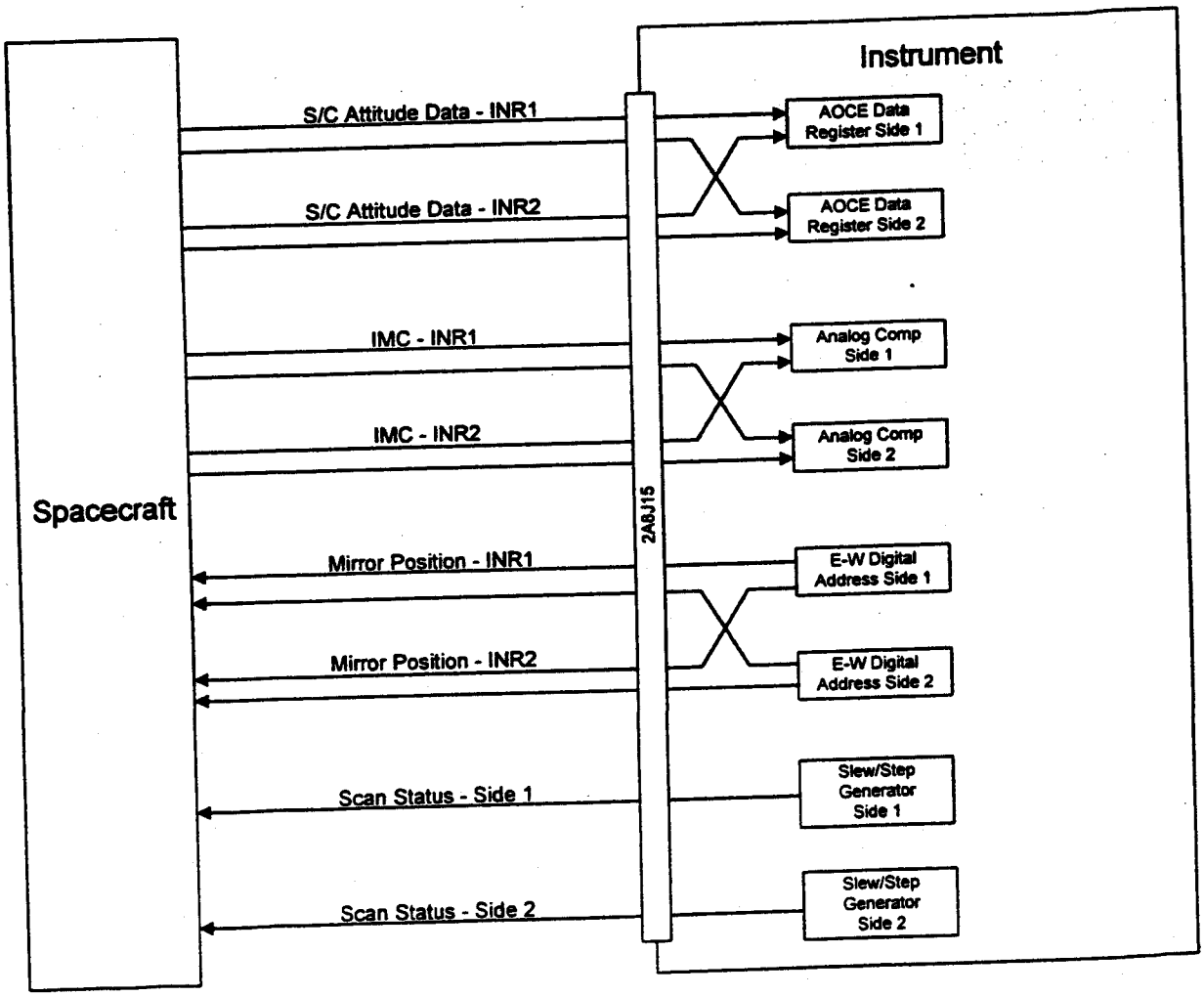


**Figure 3.5.4-1 Image Navigation and Registration (INR) Interface**

### 3.5.4.1 Spacecraft Attitude Data

Information of spacecraft attitude from the spacecraft shall be received by the instrument and shall be included in the wideband data stream. The INR circuitry shall be as shown in the schematic Figure 3.5.4-2.

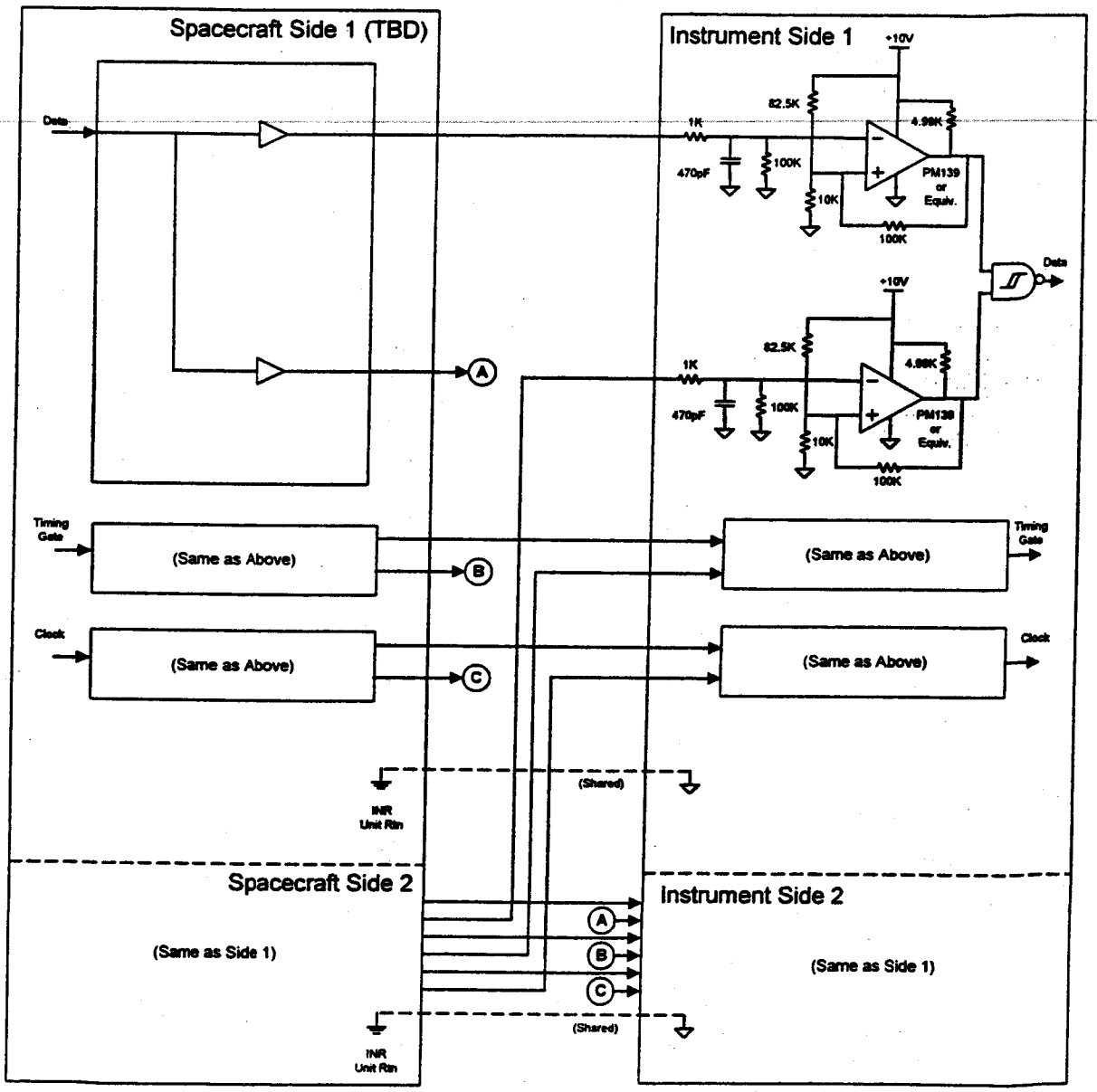


**Figure 3.5.4-2 Spacecraft Attitude Data Schematic**

The spacecraft shall provide to the instrument the Spacecraft Attitude "Data Request", "Data Strobe" and "Data" signals. The timing relationship between these signals shall be as shown in Figure 3.5.4-3.

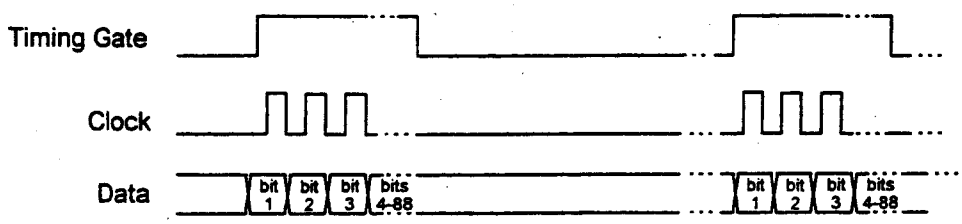


**Figure 3.5.4-3 Attitude Data Timing Diagram**

3.5.4.1.1 Spacecraft Attitude "Timing Gate" Signal Characteristics

The Timing Gate signal shall be active during readout of the serial address data. No update shall occur to the 88 bit data word during this period. The "Timing Gate" signal shall have the characteristics shown in Table 3.5.4-1.

**Table 3.5.4-1 Spacecraft Attitude "Timing Gate" Signal Characteristics**

| Item | Description | Logic Level | State | Characteristics |
|---|---|---|---|---|
| 1 | Waveform | | | Active Level (1), during which time the data must be collected. |
| 2 | Signal Level | 1<br>0 | Active<br>Inactive | +2.3 to +5.35 V<br>-0.2 to +0.6 V |
| 3 | Source Impedance | 1<br>0 | | 3.7 Kohms max<br>1.2 Kohms max |
| 4 | Timing Gate Period | | | 0.512 sec minimum |
| 5 | Rise/Fall Time | | | Less than 5 microseconds |

3.5.4.1.2 Spacecraft Attitude "Clock" Signal Characteristics

The "Clock" signal shall have the characteristics shown in Table 3.5.4-2.

**Table 3.5.4-2 Spacecraft Attitude "Clock" Signal Characteristics**

| Item | Description | Logic Level | State | Characteristics |
|---|---|---|---|---|
| 1 | No. of Pulses | | | 88 per command block |
| 2 | Signal Level | 1<br>0 | | +2.3 to +5.35 V<br>-0.2 to +0.6 V |
| 3 | Source Impedance | 1<br>0 | | 3.7 Kohm max.<br>1.2 Kohm max |
| 4 | Clock Period | | | 500 microseconds |
| 5 | Clock Pulse Width (High Level) | | | 62.5 microseconds |
| 6 | Delay from Timing Gate's rising edge to first Clock pulse's rising edge | | | 312.5 microsecond |
| 7 | Rise/Fall Time | | | Less than 5 microseconds |

3.5.4.1.3 Spacecraft Attitude "Data" Signal Characteristics

The "Data" signal shall have the characteristics shown in Table 3.5.4-3.

**Table 3.5.4-3 Spacecraft Attitude "Data" Signal Characteristics**

| Item | Description | Logic Level | State | Characteristics |
|---|---|---|---|---|
| 1 | Block Length | | | 88 bits of data |
| 2 | Signal Level | 1<br>0 | | +2.3 to +5.35 V<br>-0.2 to +0.6 V |
| 3 | Source Impedance | 1<br>0 | | 3.7 Kohm max<br>1.2 Kohm max |
| 4 | Bit Read Time | | | Instrument shall Read Data bit on Clock's falling edge. |
| 5 | Bit Update Time | | | Spacecraft shall Update Data bit on Clock's falling edge. |
| 6 | Rise/Fall Time | | | Less than 5 microseconds |

3.5.4.2 Image Motion Compensation (IMC)

Image Motion Compensation shall be provided by the spacecraft to adjust the North-South and East-West scan positions in order to offset spacecraft and instrument attitude deviations as required to meet the system-level INR specifications.

Two analog IMC signals (N-S & E-W) shall be provided to the instrument by each of two spacecraft IMC computers. The instrument shall cross-strap these inputs so that the IMC signals from either spacecraft computer can be used by the side 1 or by the side 2 instrument electronics. A separate bi-level command (IMC Source Select) shall be provided by the spacecraft to indicate which spacecraft IMC computer provides the active signal. Two Pulse Commands (IMC Range Select High, IMC Range Select Low) shall be provided by the spacecraft to select the range and scale factor of the Analog IMC Signal input. The instrument bi-level telemetry shall include the IMC Range Select Status. The instrument Wideband Data shall include the bi-level IMC Range Select Status and the Analog IMC Signals. The IMC Source Select bi-level status need not be measured in the instrument telemetry. The interface circuit's schematic shall be as shown in Figure 3.5.4-4.

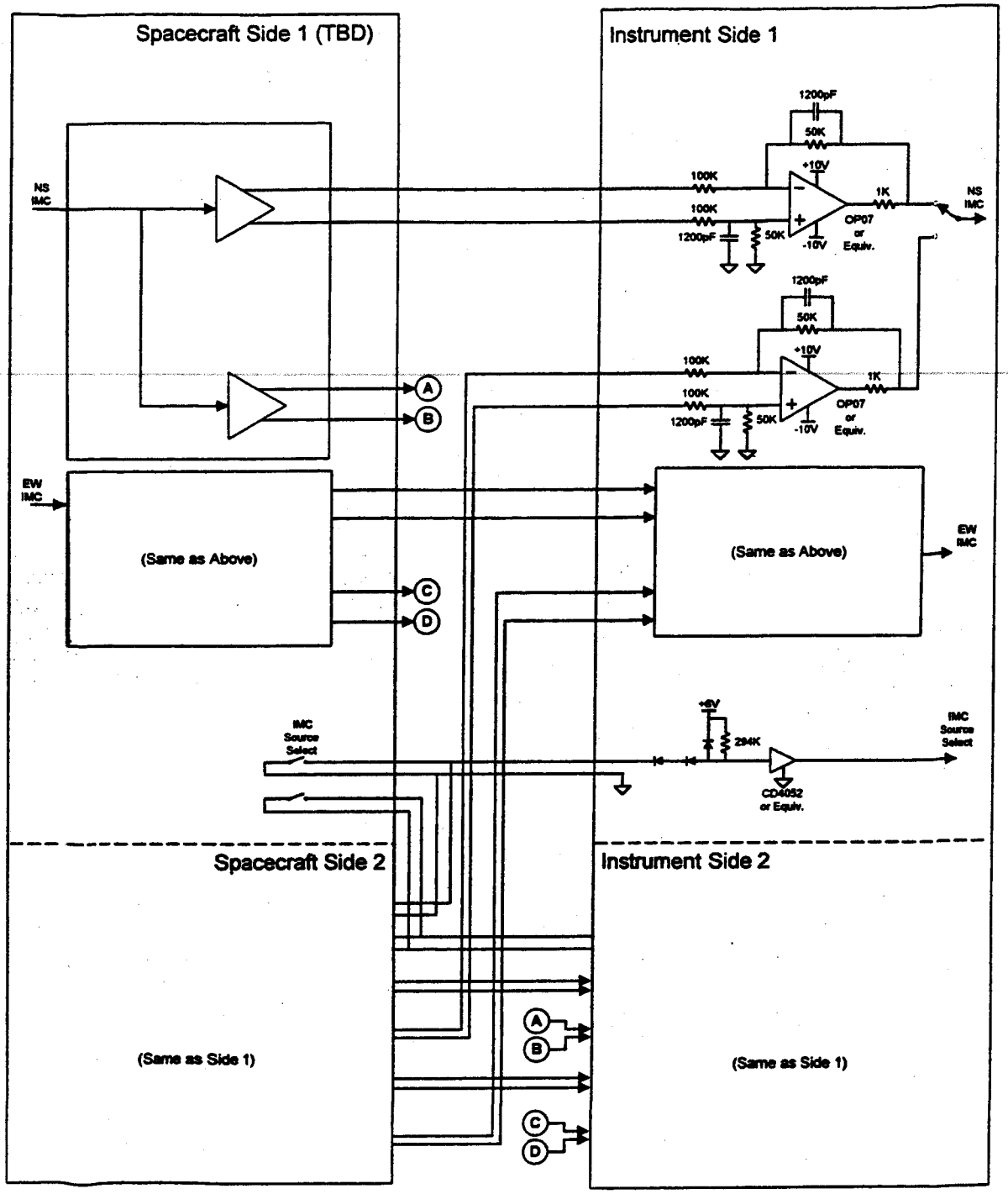


Figure 3.5.4-4 IMC Schematic

3.5.4.2.1 Analog IMC Signal Characteristics

The Analog IMC signals shall be generated by the spacecraft and shall be transmitted differentially to the instrument. The Analog IMC signal transitions shall be limited, per the requirements in Table 3.5.4-4, so as not to cause simultaneous N-S and E-W current draws on the Instrument Power Input which would exceed the peak power limits. The spacecraft shall include Analog IMC signal noise in the spacecraft INR error budget.

The Analog IMC signals from the spacecraft shall have the characteristics shown in Table 3.5.4-4.

**Table 3.5.4-4 Analog IMC Signal Characteristics**

| Item | Description | Characteristics |
|---|---|---|
| 1 | Differential Voltage Range | Analog IMC signals are bipolar and have a maximum range of ±10V. A positive voltage indicates East or North deflection of the scan mirror when the instrument is mounted with the radiative cooler facing north. |
| 2 | Source Quantization | 12-bit minimum D/A |
| 3 | Common Mode Voltage Range | The instantaneous common mode voltage between signal return and secondary power return shall not exceed ±5.0 Vdc. |
| 4 | DC Scale Factor | Analog signals into the instrument shall provide for two scales depending on range selected:<br>1) High Range - 1.25 mV/microradian (optical) for N-S and E-W.<br>2) Low Range - 2.5 mV/microradian (optical) for N-S and E-W. |
| 5 | Receiver Bandwidth | The receiver circuit in the instrument shall contain a single pole low-pass filter with a -3 dB bandwidth of 2500 Hz ±100 Hz. The filter will attenuate both differential and common mode noise. |
| 6 | \| Step Discontinuity \| | ≤ 8 microradian. |
| 7 | \| Slope \| | ≤ 15 milliradians/Sec |
| 8 | \| Slope Discontinuity \| | ≤ 15 milliradians/Sec |

3.5.4.2.2 Bi-Level IMC Source Select Signal Characteristics

The Bi-Level IMC Source Select shall have the characteristics shown in Table 3.5.4-5.

**Table 3.5.4-5 Bi-Level IMC Source Select Signal Characteristics**

| Item | Description | Logic Level | Characteristics |
|---|---|---|---|
| 1 | Voltage Level | 1 | Open relay contact indicating that the S/C Unit2 IMC signal is active. |
| | | 0 | Closed relay contact indicating that the S/C Unit1 IMC signal is active. |
| 2 | Source Impedance | 1 | Greater than 1 Megaohm |
| 3 | Feedback Voltage (from Spacecraft) | 1 | +5.3 Vdc maximum, with a pull-up resistor of approximately 33 kohms. |
| 4 | Voltage Level | 0 | -0.2 to +0.6 Vdc through closed relay contacts indicating that the S/C Unit1 IMC signal is active. |
| 5 | Source Impedance | 0 | Source impedance 500 ohms maximum. |
| 6 | Feedback Current (from Spacecraft) | 0 | 1.0 mA maximum. |
| 7 | Relay Characteristics | | Gold contacts, closed impedance less than 100 ohms, end-of-life, at 50 microamperes test current |

### 3.5.4.3 Mirror Position

The N-S and E-W Mirror Position (excluding IMC corrections) shall be provided by the instrument to the spacecraft as a separate serial data stream. The Mirror Position interface shall be configured as shown in Figure 3.5.4-5.

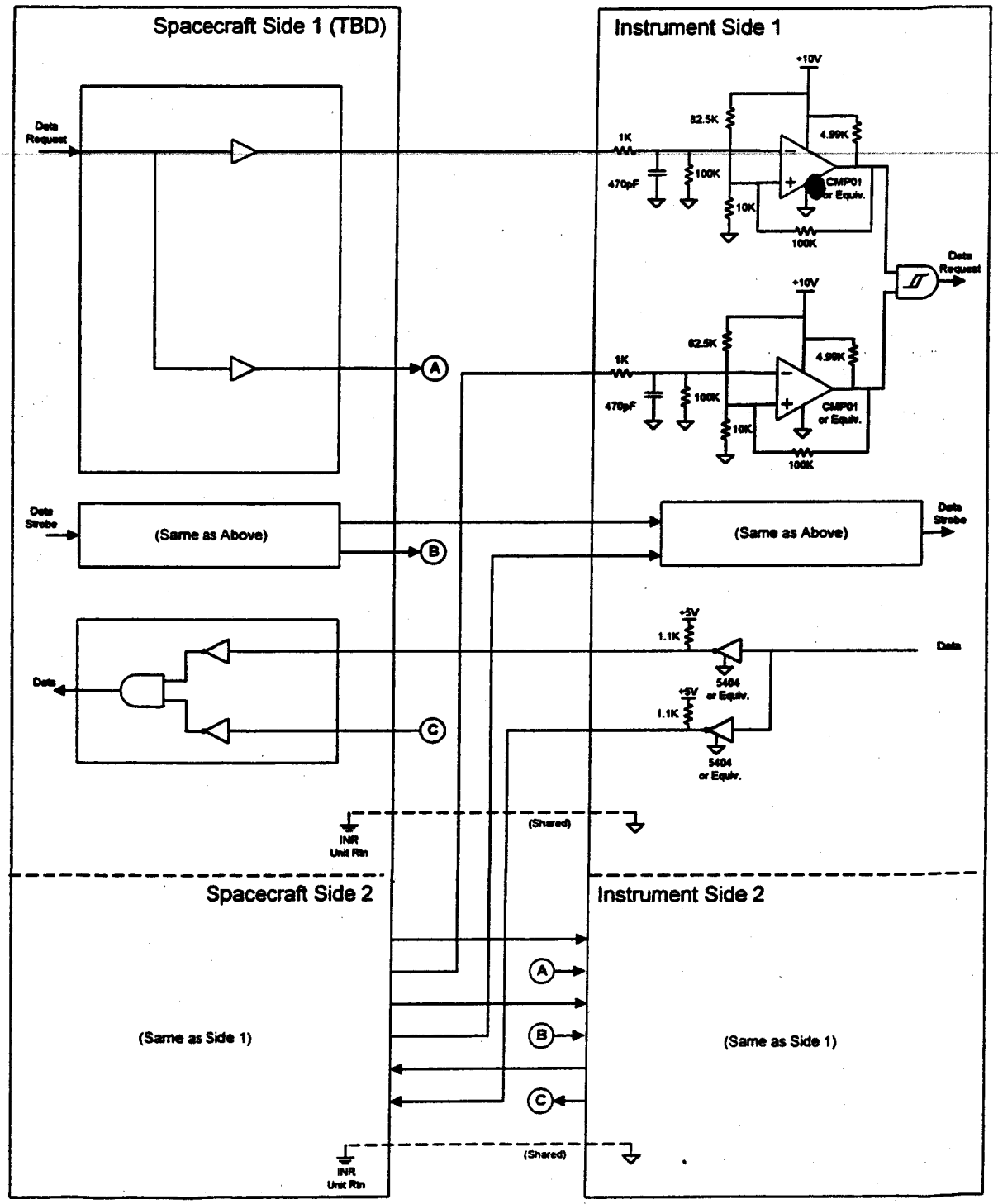


**Figure 3.5.4-5 Mirror Position Schematic**

The instrument shall provide Mirror Position "Data" to the spacecraft in response to the spacecraft's "Data Request" and "Data Strobe" signals. The timing relationship between these signals shall be as shown in Figure 3.5.4-6.

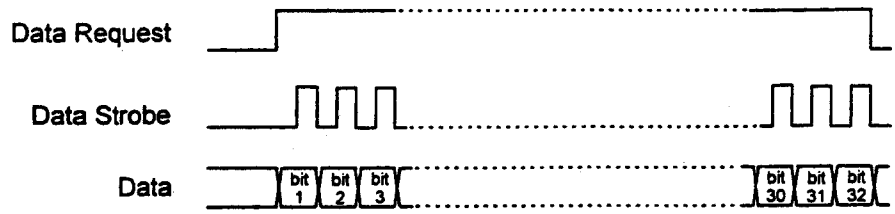


**Figure 3.5.4-6 Mirror Position Timing Diagram**

3.5.4.3.1 Mirror Position "Data Request" Signal Characteristics

The "Data Request" signal shall be active during readout of the serial data. No new update shall occur during this period. The "Data Request" signal shall have the characteristics shown in Table 3.5.4-6.

**Table 3.5.4-6 Mirror Position "Data Request" Signal Characteristics**

| Item | Description | Logic Level | State | Characteristics |
|---|---|---|---|---|
| 1 | Waveform | | | Active Level, during which time the data must be collected. |
| 2 | Signal Level | 1<br>0 | Active<br>Inactive | +4.35V to +5.35V<br>-0.2V to +0.6V |
| 3 | Source Impedance | 1<br>0 | | 3.7 Kohms max<br>1.2 Kohms max |
| 4 | Conducted Susceptibility | | | Refer to paragraph 3.4.3.4 and Table 3.4.3-2. |

3.5.4.3.2 Mirror Position "Data Strobe" Signal Characteristics

The "Data Strobe" Signal shall have the characteristics shown in Table 3.5.4-7.

**Table 3.5.4-7 Mirror Position "Data Strobe" Signal Characteristics**

| Item | Description | Logic Level | State | Characteristics |
|---|---|---|---|---|
| 1 | No. of Pulses | | | 32 per command block |
| 2 | Signal Level | 1 | Active | +4.5V to +5.5V |
| 3 | | 0 | Inactive | -0.2V +0.5V |
| | Source Impedance | 1 | | 3.7 Kohm max. |
| 4 | | 0 | | 1.2 Kohm max |
| | Pulse Repetition Frequency | | | 60 kHz - 128 kHz |
| 5 | Delay from rising edge of Data Request to rising edge of first Data Strobe pulse | | | 3.9 microseconds minimum |
| 6 | Rise/Fall Time | | | Less than 5 microseconds |
| 7 | Conducted Emissions | | | Refer to paragraph 3.4.3.2 and Table 3.4.3-1. |

3.5.4.3.3 Mirror Position "Data" Signal Characteristics

The "Data" Signal shall have the characteristics shown in Table 3.5.4-8.

**Table 3.5.4-8 Mirror Position "Data" Signal Characteristics**

| Item | Description | Logic Level | State | Characteristics |
|---|---|---|---|---|
| 1 | Block Length | | | 32 bits |
| 2 | Signal Level | 1<br>0 | | 4.35V to +5.35V<br>-0.2V to +0.6V |
| 3 | Source Impedance | 1<br>0 | | 3.7 Kohm max<br>1.2 Kohm max |
| | Rise/Fall Time | | | Less than 5 microseconds |
| 5 | Delay from rising edge of Data Request to the first valid Data bit being available | | | 1 microsecond maximum |
| 6 | Bit Read Time | | | Spacecraft shall Read Data bit on Data Strobe's rising edge. |
| 7 | Bit Update Time | | | Instrument shall Update Data bit on Data Strobe's falling edge. |
| 8 | Conducted Susceptibility | | | Refer to paragraph 3.4.3.4 and Table 3.4.3-2. |

3.5.4.3.4 Mirror Position Format

. The Mirror Position data shall consist of one 32-bit word with a bit pattern as shown in Figure 3.5.4-7.

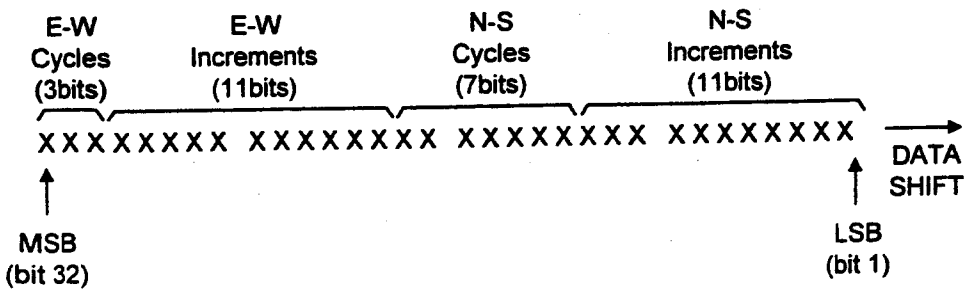


**Figure 3.5.4-7 Bit Pattern of Mirror Position**

For reference, Table 3.5.4-9 gives the relationship between Cycles, Increments and Scan angle.

**Table 3.5.4-9 Cycle & Increment Equivalent Angles**

| Item | Description | Scan Angle (Degrees - Mechanical) | Scan Angle (μRadian - Mechanical) |
|---|---|---|---|
| 1 | Each Cycle LSB | 2.8125 | ~49,087 |
| 2 | Each Increment LSB | ~0.001003 | 17.5 |

3.5.4.4 Scan Status

The instrument shall provide information on scan status to the spacecraft to aid in the generation of Image Motion Compensation signals. The scan status interface shall be as shown in Figure 3.5.4-8. The spacecraft side of the interface shall be designed such that a failure on an instrument side-1 signal cannot prevent the spacecraft from receiving the instrument side-2 signal, and vice versa.

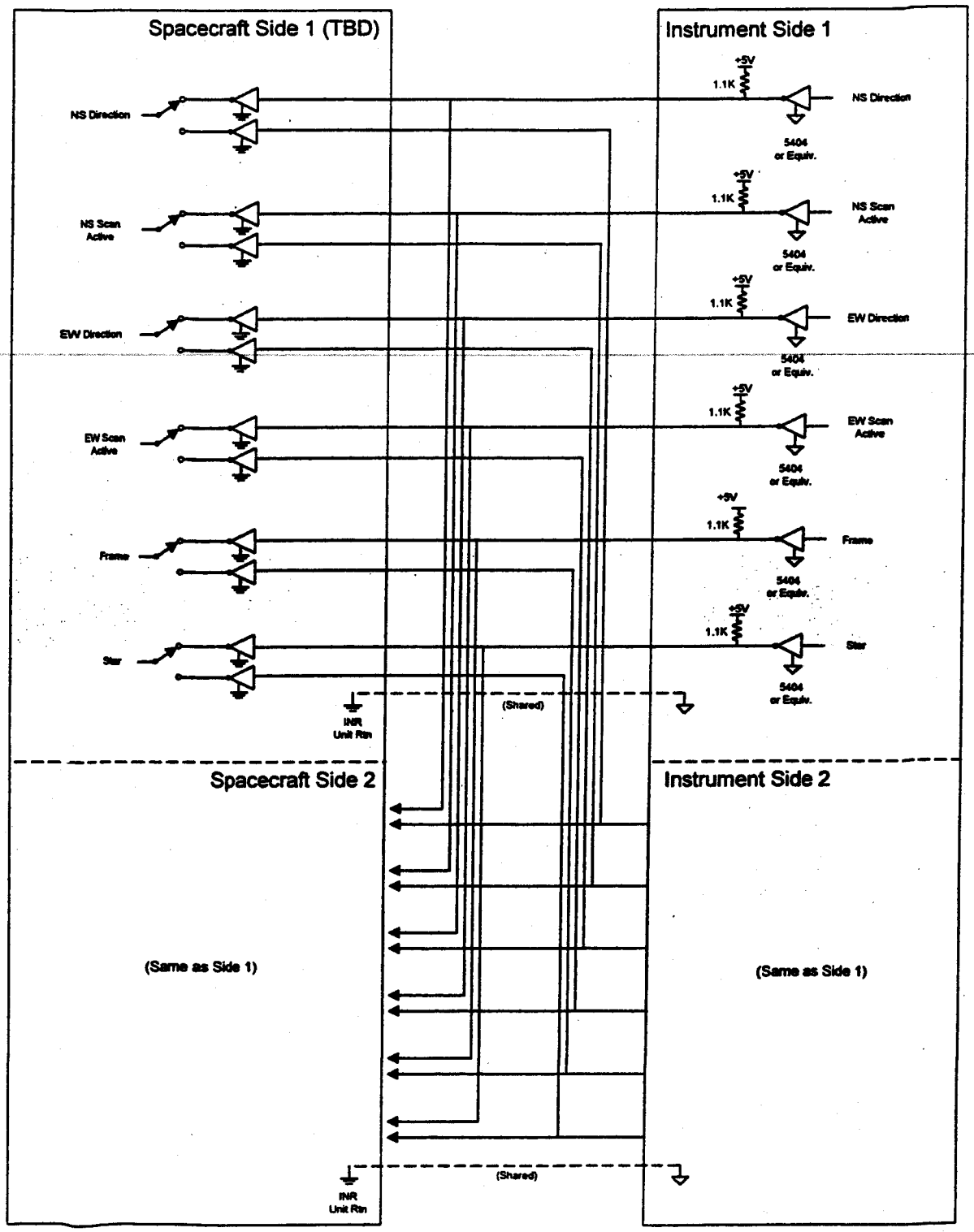


**Figure 3.5.4-8 Scan Status Interface**

The Scan Status signals shall meet the characteristics listed in Table 3.5.4-10.

**Table 3.5.4-10 Scan Status Signal Characteristics**

| Item | Description | Logic Level | State | Characteristics |
|---|---|---|---|---|
| 1 | Signal Level | 1<br>0 | | 2.4V to +5.25V<br>0.0V to +0.5V |
| 2 | Source Impedance | 1<br>0 | | 3.7 Kohm max (each signal)<br>1.2 Kohm max (each signal) |
| 3 | Input Impedance | | | 100 Kohm min (each signal) |
| 4 | Rise/Fall Time | | | Less than 5 microseconds |
| 5 | Delay from Actual Mirror Drive Signal | | | 1.0 millisecond max |
| 6 | Delay Variation | | | 0.5 millisecond max (peak to peak) |
| 7 | Signal Duration:<br>a. N-S Scan Direction<br>b. N-S Scan Active<br>c. E-W Scan Direction<br>d. E-W Scan Active | 1 | | 0.2 to 20 seconds |
| 8 | Signal Description:<br>N-S Scan Direction | 1<br>0 | | Indicates that the scan mirror, when the scan is active, is moving from south to north<br>Indicates that the scan mirror, when the scan is active, is moving from north to south. |
| 9 | Signal Description:<br>N-S Scan Active | 1<br>0 | | Indicates that N-S scan is active and the scan mirror velocity is 10 degree/second (mechanical).<br>Indicates that N-S scan is not active. |
| 10 | Signal Description:<br>E-W Scan Direction | 1<br>0 | | Indicates tha. he scan mirror, when the scan is active, is moving from west to east.<br>Indicates that the scan mirror, when the scan is active, is moving from east to west. |
| 11 | Signal Description:<br>E-W Scan Active | 1<br>0 | | Indicates that E-W scan is active and the scan mirror velocity is 10 degree/second (mechanical).<br>Indicates that E-W scan is not active. |
| 12 | Signal Description:<br>Frame/No Frame | 1<br>0 | | Indicates Frame (Active Scan).<br>Indicates No Frame. It Indicates that the scan is at a quiescent location (home or start of frame) and that no command message is active. |
| 13 | Signal Description:<br>Star/No Star | 1<br>0 | | Indicates that a scan has started moving to the star location (Star Sense Active).<br>Indicates that the scan has started moving back to the previous (Pre-Star Sense) frame location. |

### 3.5.5 Spacecraft Controlled Relays

The spacecraft shall provide and control the state of the following relays. These relays shall be located in the instrument's interconnect harness between instrument modules as shown in Figure 3.4.1-3. Figure 3.5.5-1 shows the Spacecraft Controlled Relay interface.

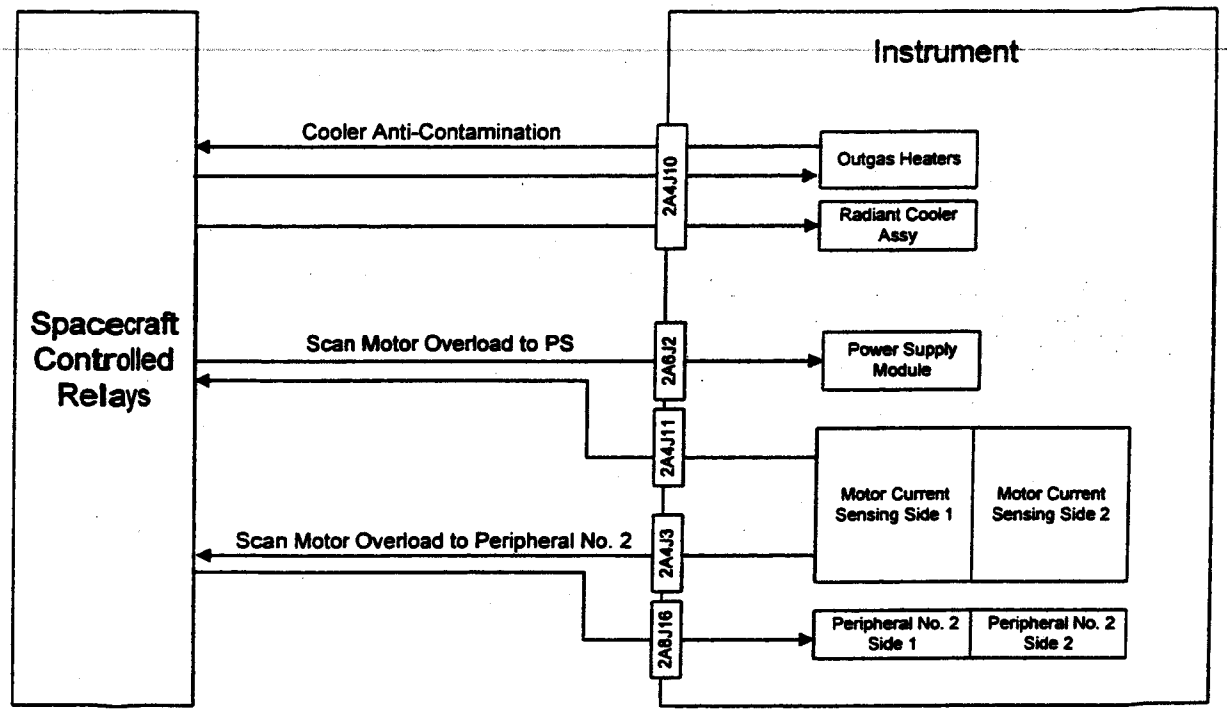


**Figure 3.5.5-1 Spacecraft Controlled Operations Interface**

### 3.5.5.1 Anti-Contamination Backup Heater

The spacecraft shall provide backup capability to the instrument's Radiant Cooler Anti-Contamination thermal control circuit. The instrument's circuit is thermostatically controlled but the spacecraft's backup heater shall be ON/OFF commandable. The interface circuitry shall be as shown in Figure 3.5.5-2.

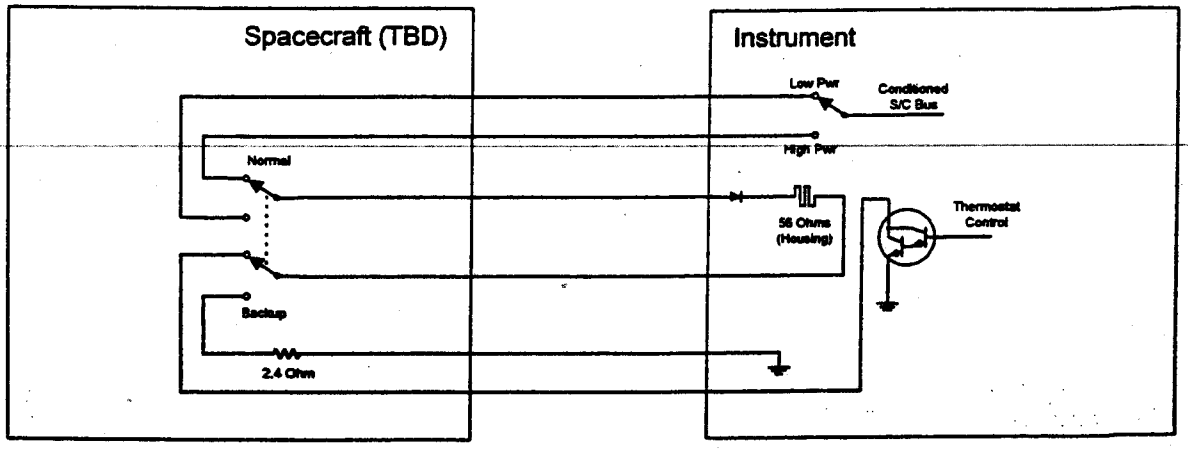


**Figure 3.5.5-2 Anti-Contamination Backup Heater**

### 3.5.5.2 Scan Motor Overload Disable

The spacecraft shall be able to disable the instrument's Scan Motor Overload function and prevent the scan from shutting down when it senses excessive current for an extended period of time. The spacecraft controlled relays shall interrupt two signals from the scan electronics as shown in the schematic of Figure 3.5.5-3.

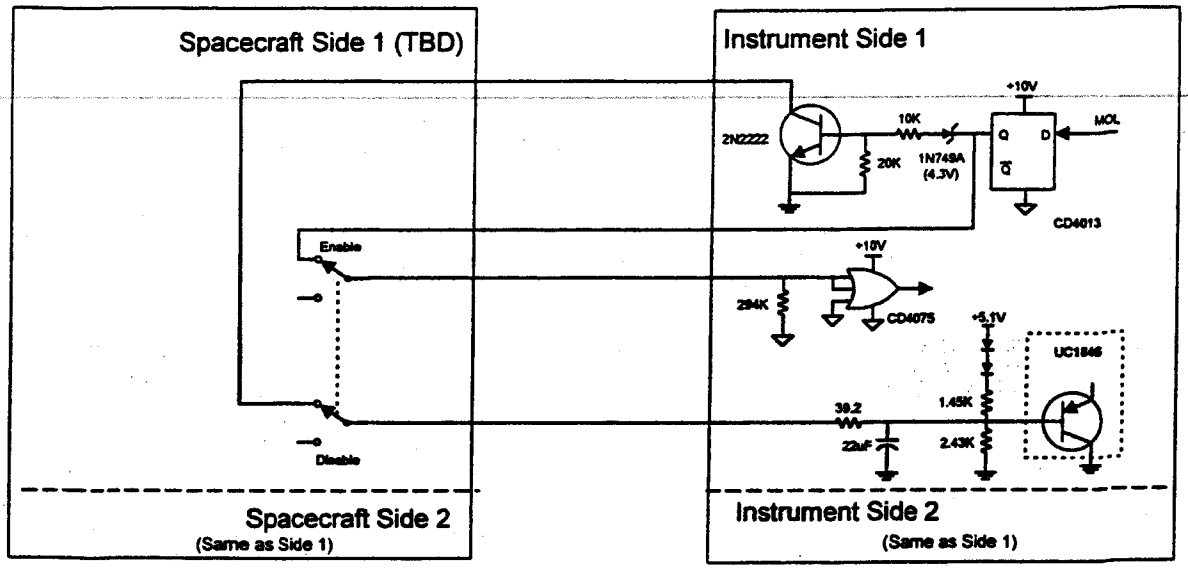


**Figure 3.5.5-3 Scan Motor Overload Disable**

## 3.6 Contamination Control

The spacecraft contractor shall comply with the following contamination requirements in order to prevent contamination from degrading the optical and thermal surfaces of the Sounder.

### 3.6.1 Ground Processing

#### 3.6.1.1 Protective Covers

ITT shall provide manually-removable non-flight covers to protect the instrument scan cavity and thermal control louvers from contamination and physical damage during pre-launch activities. ITT shall provide a flight cooler cover to protect the radiant cooler to protect the instrument cooler components from contamination and physical damage during pre-launch activities, as well as from exposure to contaminants and solar impingement during orbit raising. Protective covers shall only be removed in a Class 10,000 cleanroom (at 0.5μm and 5.0μm per Fed-Std 209) and exposure time shall be limited to the time necessary to perform testing, inspection, and cleaning of the instruments.

#### 3.6.1.2 Facility Requirements

The instruments shall be processed in a Class 100,000 cleanroom (at 0.5μm and 5.0μm per Fed-Std 209). Airborne particle counts shall be taken at least once per week during Class 100,000 operations. During operations that require exposure of contamination sensitive optical or thermal surfaces, the instruments shall be maintained in a Class 10,000 cleanroom (at 0.5μm and 5.0μm per Fed-Std 209). The functional goal shall be Class 1000 in actual practice. Airborne particle counts shall be taken at least once per hour during Class 10,000 operations. The instruments shall be maintained in relative humidity environment between 30 and 60%.

#### 3.6.1.3 Equipment Requirements

Spacecraft test and ground support equipment shall be designed to preclude contamination of the instrument. Potential contamination sources such as thermal/vacuum targets and insulation blankets shall be vacuum baked prior to use with the instrument.

3.6.1.4 Purge Requirements

The spacecraft contractor shall provide a gas purge to the instrument optical cavity during all operations at the spacecraft facility(s), launch site, launch pad, and during transportation and storage. The purge shall be gaseous nitrogen of Grade B, Type I per Mil-P-27401C with purity requirements of 99.99% nitrogen, 11.5 ppm moisture, 5 ppm hydrocarbons, and 15 particles of <5 μm per standard cubic foot. Filtered air purge with similar requirements is acceptable. The flow rate to the instrument shall be at least 20 SCFH with an allowable interrupt of up to 24 hours. All purge hardware (i.e. lines, regulators, valves, etc.) shall be certified at point of interface to the instrument. Any time a purge disconnect is performed, the purge line shall be protected from contamination.

The launch vehicle shall also provide the instrument a gas purge consistent with the requirements of Goddard document S-415-29 Launch Site Purge Plan for GOES.

3.6.1.5 Ground Storage Requirements

During storage and transportation periods, the instrument shall be bagged in ESD protective material. Witness samples representative of the instrument sensor module surface shall be examined and changed every six months during extended storage periods.

3.6.2 Spacecraft Contamination of Instrument

3.6.2.1 Spacecraft and Mission Design Requirements

Multilayer insulation and spacecraft vents shall be directed away from the instrument optical port and radiant cooler. All spacecraft components (such as insulation blankets, harnesses, and painted surfaces) with the potential to contaminate the instrument optical and thermal surfaces shall be vacuum baked prior to thermal vacuum testing with the instrument.

Protective and/or preventative measures shall be taken to preclude particulate contamination of the optical cavity and radiant cooler during launch and orbit raising.

The effects of direct or reflected ultraviolet radiation on the contamination of the optical and thermal surfaces of the instrument shall be considered in the design of on-orbit operations including storage and safe hold modes.

3.6.2.2 Particulate Contamination

The spacecraft shall contribute no more than 0.1 percent area particle coverage to the instrument radiant cooler vapor deposited aluminum specular shields, radiant cooler optical solar reflector surfaces, and the "virtual" surface of the instrument optical aperture . The spacecraft shall contribute no more than 0.25 percent area particle coverage on the filter wheel cooler surfaces. These requirements shall be interpreted as the total allowable end-of-life contribution from the spacecraft, launch vehicle, and spacecraft facility(s) to instrument contamination over the sum of all ground processing, launch, orbit raising, and mission activities.

3.6.2.3 Molecular Contamination

The spacecraft shall contribute no more than 1.0 mg/ft$^2$ (100 Å) nonvolatile residue to the instrument radiant cooler, filter wheel cooler, and the "virtual" surface of the instrument optical aperture. This requirement shall be interpreted as the total allowable end-of-life contribution from the spacecraft, launch vehicle, and spacecraft facility(s) to instrument contamination over the sum of all ground processing, launch, orbit raising, and mission activities. This requirement shall include contamination from all sources including spacecraft outgassing and plume impingement.

3.7 Shielding from Radiation Environment (TBR)

The instrument shall be designed to survive ionization and displacement damage produced by the expected ambient electron space radiation and solar flare protons during an extended mission life of 5 years (7 year design goal), regardless of the instrument's mounting location or orientation on the spacecraft.

The instrument shall be designed to prevent latchups, minimize the occurrence of single event upsets, and unintentional commands due to cosmic ray spectrum. No damage to the instrument shall result from any single event upset or unintentional command.

# 4. NOTES

## 4.1 Glossary

# 5. APPENDICES

## 5.1 NOPQ Sounder Digital Output Data Format

### 5.1.1 Wideband (Science) Data Format

The Wideband Data format shall be as shown in Table 5.1.1-1.

**Table 5.1.1-1 Wideband Data Format**

| Word | Bit(s) | Description | Content |
|---|---|---|---|
| 1 | | Sync Word #1 | All 0's ( F5DB hex After PN Code) |
| 2 | | Sync Word #2 | All 0's ( 8FE6 hex After PN Code) |
| 3 | | Sync Word #3 | All 0's ( 56E9 hex After PN Code) |
| 4 | | Sync Word #4 | All 0's ( F8B5 hex After PN Code) |
| 5 | | E-W Servo Current, Sample 1 | Analog Tlmy, A/D Word Format (See Table 5.1.2-1) |
| 6 | | Bi-level Telemetry Word #1 | |
| | 1-5 | Fill 0's | |
| | 6 | Electronics Side 1/2 Select | Bi-Level Tlmy (See section 3.5.2.1) |
| | 7 | Scan Motor ON/OFF Status | Bi-Level Tlmy (See section 3.5.2.1) |
| | 8 | Filter Wheel Motor #1 ON/OFF Status | Bi-Level Tlmy (See section 3.5.2.1) |
| | 9 | Patch Control Heater ON/OFF Status | Bi-Level Tlmy (See section 3.5.2.1) |
| | 10 | Patch Temp Setpoint Select #1 | Bi-Level Tlmy (See section 3.5.2.1) |
| | 11 | Filter Wheel Motor #2 ON/OFF Status | Bi-Level Tlmy (See section 3.5.2.1) |
| | 12 | IMC Range HI/LOW Select | Bi-Level Tlmy (See section 3.5.2.1) |
| | 13 | Thermal Control #1 ON/OFF Status | Bi-Level Tlmy (See section 3.5.2.1) |
| | 14 | Thermal Control #2 ON/OFF Status | Bi-Level Tlmy (See section 3.5.2.1) |
| | 15 | Thermal Control HI/LOW Select | Bi-Level Tlmy (See section 3.5.2.1) |
| | 16 | Odd Parity | |
| 7 | | Bi-level Tlmy Word #2 | |
| | 1-5 | Fill 0's | |
| | 6 | Cooler Housing Overtemp Status | Bi-Level Tlmy (See section 3.5.2.1) |
| | 7 | Cooler Radiator Overtemp Status | Bi-Level Tlmy (See section 3.5.2.1) |
| | 8 | Cooler Patch Overtemp Status | Bi-Level Tlmy (See section 3.5.2.1) |
| | 9 | Space Look E/W Select | Bi-Level Tlmy (See section 3.5.2.1) |
| | 10 | Filter Wheel Cntl Htr ON/OFF Status | Bi-Level Tlmy (See section 3.5.2.1) |
| | 11 | Filter Wheel Outgas ON/OFF Status | Bi-Level Tlmy (See section 3.5.2.1) |
| | 12 | Cooler Outgas ON/OFF Status | Bi-Level Tlmy (See section 3.5.2.1) |
| | 13 | Cooler Outgas Select #1 | Bi-Level Tlmy (See section 3.5.2.1) |
| | 14 | Patch Temp Setpoint Select #2 | Bi-Level Tlmy (See section 3.5.2.1) |
| | 15 | Cooler Outgas Select #2 | Bi-Level Tlmy (See section 3.5.2.1) |
| | 16 | Odd Parity | |
| 8 | | Instrument ID, FW Sync | |
| | 1-5 | Fill 0's | |

| Word | Bit(s) | Description | Content |
|---|---|---|---|
| | 6-10 | Instrument ID | CCA S/N - Side Unique |
| | 11 | Filter Wheel In-Sync Status | Logic 0 = Not In Sync, Logic 1 = In Sync |
| | 12 | Detector Bias #4 ON/OFF Status | Bi-Level Tlmy (See section 3.5.2.1) |
| | 13 | Detector Bias #3 ON/OFF Status | Bi-Level Tlmy (See section 3.5.2.1) |
| | 14 | Detector Bias #2 ON/OFF Status | Bi-Level Tlmy (See section 3.5.2.1) |
| | 15 | Detector Bias #1 ON/OFF Status | Bi-Level Tlmy (See section 3.5.2.1) |
| | 16 | Odd Parity | |
| 9 | | E-W Current Scan Position, High Byte | |
| | 1-8 | Fill 0's | |
| | 9-11 | E-W Cycles | Unsigned Binary, MSB (9), LSB (11)<br>(1 Cycle = 5.625 deg = 2805 Increments) |
| | 12-15 | E-W Increments (High Byte) | Unsigned Binary, MSB (12), LSB (15) |
| | 16 | Odd Parity | |
| 10 | | E-W Current Scan Position, Low Byte | |
| | 1-7 | Fill 0's | |
| | 8-15 | E-W Increments (Low Byte) | Unsigned Binary, (8), LSB (15) |
| | 16 | Odd Parity | |
| 11 | | N-S Current Scan Position, High Byte | |
| | 1-6 | Fill 0's | |
| | 7-13 | N-S Cycles | Unsigned Binary, MSB (7), LSB (13)<br>(1 Cycle = 2.8125 deg = 2805 Increments) |
| | 14-15 | N-S Increments (High Byte) | Unsigned Binary, MSB (14), LSB (15) |
| | 16 | Odd Parity | |
| 12 | | N-S Current Scan Position, Low Byte | |
| | 1-5 | Fill 0's | |
| | 6-15 | E-W Increments (Low Byte) | Unsigned Binary, MSB (6), LSB (15) |
| | 16 | Odd Parity | |
| 13 | | Space Look Timer | |
| | 1-3 | Fill 0's | |
| | 4-15 | Count of Every Filter Wheel Rotation | Count Since Previous Space Look (0.1 Sec/Count) |
| | 16 | Odd Parity | |
| 14 | | BB Cal Timer | |
| | 1-3 | Fill 0's | |
| | 4-15 | Count of Every 10 Filter Wheel Rotations | Count Since Previous Space Look (1 Sec/Count) |
| | 16 | Odd Parity | |
| 15 | | Scan Control Status Word #1 | See Table 5.1.3-1 |
| 16 | | Scan Control Status Word #2 | See Table 5.1.3-1 |
| 17 | | Scan Control Status Word #3 | See Table 5.1.3-1 |
| 18 | | Scan Control Status Word #4 | See Table 5.1.3-1 |
| 19 | | Scan Control Status Word #5 | See Table 5.1.3-1 |
| 20 | | Scan Control Status Word #6 | See Table 5.1.3-1 |
| 21 | | Scan Control Status Word #7 | See Table 5.1.3-1 |
| 22 | | Scan Control Status Word #8 | See Table 5.1.3-1 |
| 23 | | Scan Control Status Word #9 | See Table 5.1.3-1 |

| Word | Bit(s) | Description | Content |
|---|---|---|---|
| 24 | | Scan Control Status Word #10 | See Table 5.1.3-1 |
| 25 | | Scan Control Status Word #11 | See Table 5.1.3-1 |
| 26 | | E-W Servo Error, Sample 1 | Analog Tlmy, A/D Word Format (See Table 5.1.2-1) |
| 27 | | E-W Servo Error, Sample 2 | Analog Tlmy, A/D Word Format (See Table 5.1.2-1) |
| 28 | | E-W Servo Error, Sample 3 | Analog Tlmy, A/D Word Format (See Table 5.1.2-1) |
| 29 | | E-W Servo Error, Sample 4 | Analog Tlmy, A/D Word Format (See Table 5.1.2-1) |
| 30 | | Spare | |
| 31 | | Star Sense Det.1, Sample 1 | Video, A/D Word Format (See Table 5.1.2-1) |
| 32 | | Star Sense Det.2, Sample 1 | Video, A/D Word Format (See Table 5.1.2-1) |
| 33 | | Star Sense Det.3, Sample 1 | Video, A/D Word Format (See Table 5.1.2-1) |
| 34 | | Star Sense Det.4, Sample 1 | Video, A/D Word Format (See Table 5.1.2-1) |
| 35 | | Star Sense Det.5, Sample 1 | Video, A/D Word Format (See Table 5.1.2-1) |
| 36 | | Star Sense Det.6, Sample 1 | Video, A/D Word Format (See Table 5.1.2-1) |
| 37 | | Star Sense Det.7, Sample 1 | Video, A/D Word Format (See Table 5.1.2-1) |
| 38 | | Star Sense Det.8, Sample 1 | Video, A/D Word Format (See Table 5.1.2-1) |
| 39 | | Longwave Ch.1 Det.1 | Video, A/D Word Format (See Table 5.1.2-1) |
| 40 | | Longwave Ch.1 Det.2 | Video, A/D Word Format (See Table 5.1.2-1) |
| 41 | | Longwave Ch.1 Det.3 | Video, A/D Word Format (See Table 5.1.2-1) |
| 42 | | Longwave Ch.1 Det.4 | Video, A/D Word Format (See Table 5.1.2-1) |
| 43 | | Shortwave Ch.16 Det.1 | Video, A/D Word Format (See Table 5.1.2-1) |
| 44 | | Shortwave Ch.16 Det.2 | Video, A/D Word Format (See Table 5.1.2-1) |
| 45 | | Shortwave Ch.16 Det.3 | Video, A/D Word Format (See Table 5.1.2-1) |
| 46 | | Shortwave Ch.16 Det.4 | Video, A/D Word Format (See Table 5.1.2-1) |
| 47 | | N-S Servo Current | Analog Tlmy, A/D Word Format (See Table 5.1.2-1) |
| 48 | | Thermal Control Current #1 | Analog Tlmy, A/D Word Format (See Table 5.1.2-1) |
| 49 | | Thermal Control Current #2 | Analog Tlmy, A/D Word Format (See Table 5.1.2-1) |
| 50 | | Filter Wheel Motor Current #1 | Analog Tlmy, A/D Word Format (See Table 5.1.2-1) |
| 51 | | Filter Wheel Motor Current #2 | Analog Tlmy, A/D Word Format (See Table 5.1.2-1) |
| 52 | | Instrument Power Input Current | Analog Tlmy, A/D Word Format (See Table 5.1.2-1) |
| 53 | | E-W Servo Error, Sample 5 | Analog Tlmy, A/D Word Format (See Table 5.1.2-1) |
| 54 | | Filter Wheel Period Monitor | |
| | 1 | Fill 0's | |
| | 2-11 | Channel #1 Period Variation | Unsigned Binary, MSB (2), LSB (11) |
| | 12-15 | Filter Wheel Period Variation | BCD, MSB (12), LSB (15) |
| | 16 | Odd Parity | |
| 55 | | Electronics +17V | Analog Tlmy, A/D Word Format (See Table 5.1.2-1) |
| 56 | | Electronics +8V1 | Analog Tlmy, A/D Word Format (See Table 5.1.2-1) |
| 57 | | Electronics +8V2 | Analog Tlmy, A/D Word Format (See Table 5.1.2-1) |
| 58 | | Electronics -17V | Analog Tlmy, A/D Word Format (See Table 5.1.2-1) |
| 59 | | Electronics -8V | Analog Tlmy, A/D Word Format (See Table 5.1.2-1) |
| 60 | | Electronics +12V | Analog Tlmy, A/D Word Format (See Table 5.1.2-1) |
| 61 | | Electronics +8V3 | Analog Tlmy, A/D Word Format (See Table 5.1.2-1) |
| 62 | | Filter Wheel +18V1 | Analog Tlmy, A/D Word Format (See Table 5.1.2-1) |
| 63 | | Filter Wheel +18V2 | Analog Tlmy, A/D Word Format (See Table 5.1.2-1) |
| 64 | | Midwave Ch.12 Det.1 | Video, A/D Word Format (See Table 5.1.2-1) |

| Word | Bit(s) | Description | Content |
|---|---|---|---|
| 65 | | Midwave Ch.12 Det.2 | Video, A/D Word Format (See Table 5.1.2-1) |
| 66 | | Midwave Ch.12 Det.3 | Video, A/D Word Format (See Table 5.1.2-1) |
| 67 | | Midwave Ch.12 Det.4 | Video, A/D Word Format (See Table 5.1.2-1) |
| 68 | | Longwave Ch.2 Det.1 | Video, A/D Word Format (See Table 5.1.2-1) |
| 69 | | Longwave Ch.2 Det.2 | Video, A/D Word Format (See Table 5.1.2-1) |
| 70 | | Longwave Ch.2 Det.3 | Video, A/D Word Format (See Table 5.1.2-1) |
| 71 | | Longwave Ch.2 Det.4 | Video, A/D Word Format (See Table 5.1.2-1) |
| 72 | | E-W Servo Error, Sample 6 | Analog Tlmy, A/D Word Format (See Table 5.1.2-1) |
| 73 | | Servo +25V | Analog Tlmy, A/D Word Format (See Table 5.1.2-1) |
| 74 | | Servo +7V1 | Analog Tlmy, A/D Word Format (See Table 5.1.2-1) |
| 75 | | Servo +7V2 | Analog Tlmy, A/D Word Format (See Table 5.1.2-1) |
| 76 | | Servo +9V | Analog Tlmy, A/D Word Format (See Table 5.1.2-1) |
| 77 | | Servo -25V | Analog Tlmy, A/D Word Format (See Table 5.1.2-1) |
| 78 | | Servo -9V | Analog Tlmy, A/D Word Format (See Table 5.1.2-1) |
| 79 | | TLM +11V | Analog Tlmy, A/D Word Format (See Table 5.1.2-1) |
| 80 | | Spare | |
| 81 | | Shortwave Ch.12 Det.1 | Video, A/D Word Format (See Table 5.1.2-1) |
| 82 | | Shortwave Ch.12 Det.2 | Video, A/D Word Format (See Table 5.1.2-1) |
| 83 | | Shortwave Ch.12 Det.3 | Video, A/D Word Format (See Table 5.1.2-1) |
| 84 | | Shortwave Ch.12 Det.4 | Video, A/D Word Format (See Table 5.1.2-1) |
| 85 | | Spare | |
| 86 | | TLM +17V | Analog Tlmy, A/D Word Format (See Table 5.1.2-1) |
| 87 | | TLM OR'd +40V | Analog Tlmy, A/D Word Format (See Table 5.1.2-1) |
| 88 | | TLM -8V | Analog Tlmy, A/D Word Format (See Table 5.1.2-1) |
| 89 | | Spare | |
| 90 | | Longwave Ch.4 Det.1 | Video, A/D Word Format (See Table 5.1.2-1) |
| 91 | | Longwave Ch.4 Det.2 | Video, A/D Word Format (See Table 5.1.2-1) |
| 92 | | Longwave Ch.4 Det.3 | Video, A/D Word Format (See Table 5.1.2-1) |
| 93 | | Longwave Ch.4 Det.4 | Video, A/D Word Format (See Table 5.1.2-1) |
| 94 | | Star Sense Det.1, Sample 2 | Video, A/D Word Format (See Table 5.1.2-1) |
| 95 | | Star Sense Det.2, Sample 2 | Video, A/D Word Format (See Table 5.1.2-1) |
| 96 | | Star Sense Det.3, Sample 2 | Video, A/D Word Format (See Table 5.1.2-1) |
| 97 | | Star Sense Det.4, Sample 2 | Video, A/D Word Format (See Table 5.1.2-1) |
| 98 | | Star Sense Det.5, Sample 2 | Video, A/D Word Format (See Table 5.1.2-1) |
| 99 | | Star Sense Det.6, Sample 2 | Video, A/D Word Format (See Table 5.1.2-1) |
| 100 | | Star Sense Det.7, Sample 2 | Video, A/D Word Format (See Table 5.1.2-1) |
| 101 | | Star Sense Det.8, Sample 2 | Video, A/D Word Format (See Table 5.1.2-1) |
| 102 | | Midwave Ch.10 Det.1 | Video, A/D Word Format (See Table 5.1.2-1) |
| 103 | | Midwave Ch.10 Det.2 | Video, A/D Word Format (See Table 5.1.2-1) |
| 104 | | Midwave Ch.10 Det.3 | Video, A/D Word Format (See Table 5.1.2-1) |
| 105 | | Midwave Ch.10 Det.4 | Video, A/D Word Format (See Table 5.1.2-1) |
| 106 | | Spare | |
| 107 | | Signal Ground | Analog Tlmy, A/D Word Format (See Table 5.1.2-1) |
| 108 | | Heater Power Input Voltage | Analog Tlmy, A/D Word Format (See Table 5.1.2-1) |
| 109 | | Visible Optics Temp | Analog Tlmy, A/D Word Format (See Table 5.1.2-1) |

| Word | Bit(s) | Description | Content |
|---|---|---|---|
| 110 | | Blackbody Tgt Temp #1 | Analog Tlmy, A/D Word Format (See Table 5.1.2-1) |
| 111 | | Blackbody Tgt Temp #2 | Analog Tlmy, A/D Word Format (See Table 5.1.2-1) |
| 112 | | Blackbody Tgt Temp #3 | Analog Tlmy, A/D Word Format (See Table 5.1.2-1) |
| 113 | | Blackbody Tgt Temp #4 | Analog Tlmy, A/D Word Format (See Table 5.1.2-1) |
| 114 | | Blackbody Tgt Temp #5 | Analog Tlmy, A/D Word Format (See Table 5.1.2-1) |
| 115 | | Blackbody Tgt Temp #6 | Analog Tlmy, A/D Word Format (See Table 5.1.2-1) |
| 116 | | Spare | |
| 117 | | Shortwave Ch.14 Det.1 | Video, A/D Word Format (See Table 5.1.2-1) |
| 118 | | Shortwave Ch.14 Det.2 | Video, A/D Word Format (See Table 5.1.2-1) |
| 119 | | Shortwave Ch.14 Det.3 | Video, A/D Word Format (See Table 5.1.2-1) |
| 120 | | Shortwave Ch.14 Det.4 | Video, A/D Word Format (See Table 5.1.2-1) |
| 121 | | Longwave Ch.5 Det.1 | Video, A/D Word Format (See Table 5.1.2-1) |
| 122 | | Longwave Ch.5 Det.2 | Video, A/D Word Format (See Table 5.1.2-1) |
| 123 | | Longwave Ch.5 Det.3 | Video, A/D Word Format (See Table 5.1.2-1) |
| 124 | | Longwave Ch.5 Det.4 | Video, A/D Word Format (See Table 5.1.2-1) |
| 125 | | E-W Servo Error, Sample 7 | Analog Tlmy, A/D Word Format (See Table 5.1.2-1) |
| 126 | | Blackbody Tgt Temp #7 | Analog Tlmy, A/D Word Format (See Table 5.1.2-1) |
| 127 | | Blackbody Tgt Temp #8 | Analog Tlmy, A/D Word Format (See Table 5.1.2-1) |
| 128 | | Cooler Housing Temp | Analog Tlmy, A/D Word Format (See Table 5.1.2-1) |
| 129 | | Cooler Radiator Temp | Analog Tlmy, A/D Word Format (See Table 5.1.2-1) |
| 130 | | Electronics Temp #1 | Analog Tlmy, A/D Word Format (See Table 5.1.2-1) |
| 131 | | Electronics Temp #2 | Analog Tlmy, A/D Word Format (See Table 5.1.2-1) |
| 132 | | Filter Wheel Housing Temp | Analog Tlmy, A/D Word Format (See Table 5.1.2-1) |
| 133 | | Filter Wheel Motor Temp | Analog Tlmy, A/D Word Format (See Table 5.1.2-1) |
| 134 | | E-W Servo Current, Sample 2 | Analog Tlmy, A/D Word Format (See Table 5.1.2-1) |
| 135 | | Midwave Ch.9 Det.1 | Video, A/D Word Format (See Table 5.1.2-1) |
| 136 | | Midwave Ch.9 Det.2 | Video, A/D Word Format (See Table 5.1.2-1) |
| 137 | | Midwave Ch.9 Det.3 | Video, A/D Word Format (See Table 5.1.2-1) |
| 138 | | Midwave Ch.9 Det.4 | Video, A/D Word Format (See Table 5.1.2-1) |
| 139 | | Spare | |
| 140 | | Filter Wheel Radiator Temp | Analog Tlmy, A/D Word Format (See Table 5.1.2-1) |
| 141 | | Louver Radiator Temp | Analog Tlmy, A/D Word Format (See Table 5.1.2-1) |
| 142 | | Cooler Patch Narrow Range Temp | Analog Tlmy, A/D Word Format (See Table 5.1.2-1) |
| 143 | | Power Supply Temp | Analog Tlmy, A/D Word Format (See Table 5.1.2-1) |
| 144 | | Scan Mirror Temp | Analog Tlmy, A/D Word Format (See Table 5.1.2-1) |
| 145 | | Sensor Assy Baseplate Temp #1 | Analog Tlmy, A/D Word Format (See Table 5.1.2-1) |
| 146 | | Spare | |
| 147 | | Longwave Ch.6 Det.1 | Video, A/D Word Format (See Table 5.1.2-1) |
| 148 | | Longwave Ch.6 Det.2 | Video, A/D Word Format (See Table 5.1.2-1) |
| 149 | | Longwave Ch.6 Det.3 | Video, A/D Word Format (See Table 5.1.2-1) |
| 150 | | Longwave Ch.6 Det.4 | Video, A/D Word Format (See Table 5.1.2-1) |
| 151 | | Shortwave Ch.13 Det.1 | Video, A/D Word Format (See Table 5.1.2-1) |
| 152 | | Shortwave Ch.13 Det.2 | Video, A/D Word Format (See Table 5.1.2-1) |
| 153 | | Shortwave Ch.13 Det.3 | Video, A/D Word Format (See Table 5.1.2-1) |
| 154 | | Shortwave Ch.13 Det.4 | Video, A/D Word Format (See Table 5.1.2-1) |

| Word | Bit(s) | Description | Content |
|---|---|---|---|
| 155 | | Spare | |
| 156 | | Star Sense Det.1, Sample 3 | Video, A/D Word Format (See Table 5.1.2-1) |
| 157 | | Star Sense Det.2, Sample 3 | Video, A/D Word Format (See Table 5.1.2-1) |
| 158 | | Star Sense Det.3, Sample 3 | Video, A/D Word Format (See Table 5.1.2-1) |
| 159 | | Star Sense Det.4, Sample 3 | Video, A/D Word Format (See Table 5.1.2-1) |
| 160 | | Star Sense Det.5, Sample 3 | Video, A/D Word Format (See Table 5.1.2-1) |
| 161 | | Star Sense Det.6, Sample 3 | Video, A/D Word Format (See Table 5.1.2-1) |
| 162 | | Star Sense Det.7, Sample 3 | Video, A/D Word Format (See Table 5.1.2-1) |
| 163 | | Star Sense Det.8, Sample 3 | Video, A/D Word Format (See Table 5.1.2-1) |
| 164 | | Spare | |
| 165 | | Sensor Assy Baseplate Temp #2 | Analog Tlmy, A/D Word Format (See Table 5.1.2-1) |
| 166 | | Sensor Assy Baseplate Temp #3 | Analog Tlmy, A/D Word Format (See Table 5.1.2-1) |
| 167 | | Sensor Assy Baseplate Temp #4 | Analog Tlmy, A/D Word Format (See Table 5.1.2-1) |
| 168 | | Spare | |
| 169 | | Midwave Ch.8 Det.1 | Video, A/D Word Format (See Table 5.1.2-1) |
| 170 | | Midwave Ch.8 Det.2 | Video, A/D Word Format (See Table 5.1.2-1) |
| 171 | | Midwave Ch.8 Det.3 | Video, A/D Word Format (See Table 5.1.2-1) |
| 172 | | Midwave Ch.8 Det.4 | Video, A/D Word Format (See Table 5.1.2-1) |
| 173 | | Longwave Ch.7 Det.1 | Video, A/D Word Format (See Table 5.1.2-1) |
| 174 | | Longwave Ch.7 Det.2 | Video, A/D Word Format (See Table 5.1.2-1) |
| 175 | | Longwave Ch.7 Det.3 | Video, A/D Word Format (See Table 5.1.2-1) |
| 176 | | Longwave Ch.7 Det.4 | Video, A/D Word Format (See Table 5.1.2-1) |
| 177 | | Shortwave Ch.17 Det.1 | Video, A/D Word Format (See Table 5.1.2-1) |
| 178 | | Shortwave Ch.17 Det.2 | Video, A/D Word Format (See Table 5.1.2-1) |
| 179 | | Shortwave Ch.17 Det.3 | Video, A/D Word Format (See Table 5.1.2-1) |
| 180 | | Shortwave Ch.17 Det.4 | Video, A/D Word Format (See Table 5.1.2-1) |
| 181 | | E-W Servo Error, Sample 8 | Analog Tlmy, A/D Word Format (See Table 5.1.2-1) |
| 182 | | Sensor Assy Baseplate Temp #5 | Analog Tlmy, A/D Word Format (See Table 5.1.2-1) |
| 183 | | Sensor Assy Baseplate Temp #6 | Analog Tlmy, A/D Word Format (See Table 5.1.2-1) |
| 184 | | Telescope Primary Temp | Analog Tlmy, A/D Word Format (See Table 5.1.2-1) |
| 185 | | Telescope Secondary Temp #1 | Analog Tlmy, A/D Word Format (See Table 5.1.2-1) |
| 186 | | Cooler Patch Wide Range Temp | Analog Tlmy, A/D Word Format (See Table 5.1.2-1) |
| 187 | | E-W IMC Input | Analog Tlmy, A/D Word Format (See Table 5.1.2-1) |
| 188 | | Spare | (Not Available for Use) |
| 189 | | E-Cal Input Voltage #1 | Analog Tlmy, A/D Word Format (See Table 5.1.2-1) |
| 190 | | Filter Wheel Cntl Htr Voltage | Analog Tlmy, A/D Word Format (See Table 5.1.2-1) |
| 191 | | N-S IMC Input | Analog Tlmy, A/D Word Format (See Table 5.1.2-1) |
| 192 | | N-S Servo Error | Analog Tlmy, A/D Word Format (See Table 5.1.2-1) |
| 193 | | Patch Control Heater Voltage | Analog Tlmy, A/D Word Format (See Table 5.1.2-1) |
| 194 | | Reference Voltage +10V #1 | Analog Tlmy, A/D Word Format (See Table 5.1.2-1) |
| 195 | | Thermal Control Current #3 | Analog Tlmy, A/D Word Format (See Table 5.1.2-1) |
| 196 | | Thermal Control Current #4 | Analog Tlmy, A/D Word Format (See Table 5.1.2-1) |
| 197 | | Thermal Control Current #5 | Analog Tlmy, A/D Word Format (See Table 5.1.2-1) |
| 198 | | Thermal Control Current #6 | Analog Tlmy, A/D Word Format (See Table 5.1.2-1) |
| 199 | | Spare | |

| Word | Bit(s) | Description | Content |
|---|---|---|---|
| 200 | | Spare | |
| 201 | | Longwave Ch.3 Det.1 | Video, A/D Word Format (See Table 5.1.2-1) |
| 202 | | Longwave Ch.3 Det.2 | Video, A/D Word Format (See Table 5.1.2-1) |
| 203 | | Longwave Ch.3 Det.3 | Video, A/D Word Format (See Table 5.1.2-1) |
| 204 | | Longwave Ch.3 Det.4 | Video, A/D Word Format (See Table 5.1.2-1) |
| 205 | | Telescope Secondary Temp #2 | Analog Tlmy, A/D Word Format (See Table 5.1.2-1) |
| 206 | | Primary Baffle Temp #1 | Analog Tlmy, A/D Word Format (See Table 5.1.2-1) |
| 207 | | Primary Baffle Temp #2 | Analog Tlmy, A/D Word Format (See Table 5.1.2-1) |
| 208 | | Telescope Secondary Temp #3 | Analog Tlmy, A/D Word Format (See Table 5.1.2-1) |
| 209 | | Spare | |
| 210 | | Spare | |
| 211 | | Shortwave Ch.18 Det.1 | Video, A/D Word Format (See Table 5.1.2-1) |
| 212 | | Shortwave Ch.18 Det.2 | Video, A/D Word Format (See Table 5.1.2-1) |
| 213 | | Shortwave Ch.18 Det.3 | Video, A/D Word Format (See Table 5.1.2-1) |
| 214 | | Shortwave Ch.18 Det.4 | Video, A/D Word Format (See Table 5.1.2-1) |
| 215 | | Midwave Ch.11 Det.1 | Video, A/D Word Format (See Table 5.1.2-1) |
| 216 | | Midwave Ch.11 Det.2 | Video, A/D Word Format (See Table 5.1.2-1) |
| 217 | | Midwave Ch.11 Det.3 | Video, A/D Word Format (See Table 5.1.2-1) |
| 218 | | Midwave Ch.11 Det.4 | Video, A/D Word Format (See Table 5.1.2-1) |
| 219 | | Star Sense Det.1, Sample 4 | Video, A/D Word Format (See Table 5.1.2-1) |
| 220 | | Star Sense Det.2, Sample 4 | Video, A/D Word Format (See Table 5.1.2-1) |
| 221 | | Star Sense Det.3, Sample 4 | Video, A/D Word Format (See Table 5.1.2-1) |
| 222 | | Star Sense Det.4, Sample 4 | Video, A/D Word Format (See Table 5.1.2-1) |
| 223 | | Star Sense Det.5, Sample 4 | Video, A/D Word Format (See Table 5.1.2-1) |
| 224 | | Star Sense Det.6, Sample 4 | Video, A/D Word Format (See Table 5.1.2-1) |
| 225 | | Star Sense Det.7, Sample 4 | Video, A/D Word Format (See Table 5.1.2-1) |
| 226 | | Star Sense Det.8, Sample 4 | Video, A/D Word Format (See Table 5.1.2-1) |
| 227 | | Visible Channel Det.1 | Video, A/D Word Format (See Table 5.1.2-1) |
| 228 | | Visible Channel Det.2 | Video, A/D Word Format (See Table 5.1.2-1) |
| 229 | | Visible Channel Det.3 | Video, A/D Word Format (See Table 5.1.2-1) |
| 230 | | Visible Channel Det.4 | Video, A/D Word Format (See Table 5.1.2-1) |
| 231 | | Spare | |
| 232 | | Spacecraft Attitude Data Word #1 | S/C Input (Bits 1-8), Fill 0's (Bits 9-15), Parity (16) |
| 233 | | Spacecraft Attitude Data Word #2 | S/C Input (Bits 1-8), Fill 0's (Bits 9-15), Parity (16) |
| 234 | | Spacecraft Attitude Data Word #3 | S/C Input (Bits 1-8), Fill 0's (Bits 9-15), Parity (16) |
| 235 | | Spacecraft Attitude Data Word #4 | S/C Input (Bits 1-8), Fill 0's (Bits 9-15), Parity (16) |
| 236 | | Spacecraft Attitude Data Word #5 | S/C Input (Bits 1-8), Fill 0's (Bits 9-15), Parity (16) |
| 237 | | Spacecraft Attitude Data Word #6 | S/C Input (Bits 1-8), Fill 0's (Bits 9-15), Parity (16) |
| 238 | | Spacecraft Attitude Data Word #7 | S/C Input (Bits 1-8), Fill 0's (Bits 9-15), Parity (16) |
| 239 | | Spacecraft Attitude Data Word #8 | S/C Input (Bits 1-8), Fill 0's (Bits 9-15), Parity (16) |
| 240 | | Spacecraft Attitude Data Word #9 | S/C Input (Bits 1-8), Fill 0's (Bits 9-15), Parity (16) |
| 241 | | Spacecraft Attitude Data Word #10 | S/C Input (Bits 1-8), Fill 0's (Bits 9-15), Parity (16) |
| 242 | | Spacecraft Attitude Data Word #11 | S/C Input (Bits 1-8), Fill 0's (Bits 9-15), Parity (16) |
| 243 | | Spare | |
| 244 | | Spare | |

| Word | Bit(s) | Description | Content |
|---|---|---|---|
| 245 | | Spare | |
| 246 | | Spare | |
| 247 | | Spare | |
| 248 | | Spare | |
| 249 | | Spare | |
| 250 | | Blank | Variable Length, No Parity |

### 5.1.2 A/D Word Format

Analog signals, after being converted to digital, shall have an A/D Word format as shown in Table 5.1.2-1.

**Table 5.1.2-1 A/D Word Format**

| Bit(s) | Description | Content |
|---|---|---|
| 1-2 | Fill 0's | |
| 3 | Sign Bit | Logic 0 = Positive, Logic 1 = Negative Voltage |
| 4-15 | Amplitude | Straight Binary, MSB (4), LSB (15) |
| 16 | Odd Parity | |

### 5.1.3 Scan Control Status Word Definitions

The Scan Control Status Words shall be compatible with the definitions shown in Table 5.1.3-1.

**Table 5.1.3-1 Scan Control Status Word Definitions**

| Word | Bit(s) | Designator | Description | Content |
|---|---|---|---|---|
| | | | | |
| 21 | 12-15 | ECLn | ECAL Level Identification (Level 0 = No Signal) | MSB (12), LSB (15) |
| 20 | 12-15 | RCn | Repeat Count (No. of Frames Yet to be Scanned) | Excludes Present Frame<br>MSB (12), LSB (15) |
| 19 | 10-15 | DCn | Dwell Count (No. of Dwells in Progress) | Includes Present Dwell Period<br>MSB (10), LSB (15) |
| 15 | 10 | Cal Enable | Calibrate Enable | Logic 0 = All other time<br>Logic 1 = Cal Enabled at this Block |
| 15 | 11 | Cal Disable | Calibrate Disable | Logic 0 = All other time<br>Logic 1 = Cal Disabled at this Block |
| 22 | 11 | Scan Rset | Scan Reset | Logic 0 = All other time<br>Logic 1 = Scan Reset Received |
| 23 | 15 | Actv Scan | Active Scan | Logic 0 = At rest |

| Word | Bit(s) | Designator | Description | Content |
|---|---|---|---|---|
| | | | | Logic 1 = Any operation in progress |
| 23 | 14 | Resv | Reserved | |
| 23 | 13 | PRI Scan | Priority Scan | Logic 0 = All other time<br>Logic 1 = Priority Scan or associated Cal in progress |
| 23 | 10 | MOL | Scan Motor Overload | Logic 0 = All other time<br>Logic 1 = Overload fault condition<br>To recover, send Scan OFF, Scan Reset, Scan ON |
| 22 | 14<br>15 | EWGT | E-W Scan Direction and Status #1 | Logic 0 = At End of Scan Line OR Stepping West<br>Logic 1 = Stepping East OR Invalid |
| 22 | 15 | EWLT | E-W Scan Direction and Status #2 | Logic 0 = At End of Scan Line OR Stepping East<br>Logic 1 = Stepping West OR Invalid |
| 22 | 12 | NSGT | N-S Scan Direction and Status #1 | Logic 0 = At End of Scan Line OR Stepping South<br>Logic 1 = Stepping North OR Invalid |
| 22 | 13 | NSLT | N-S Scan Direction and Status #2 | Logic 0 = At End of Scan Line OR Stepping North<br>Logic 1 = Stepping South OR Invalid |
| 23 | 12 | EW | East-West Axis Slew | Logic 0 = All other time<br>Logic 1 = E-W Slew Active |
| 23 | 11 | NS | North-South Axis Slew | Logic 0 = All other time<br>Logic 1 = N-S Slew Active |
| 23 | 10 | NS Step | North-South Axis Step | Logic 0 = All other time<br>Logic 1 = N-S Step Active |
| 15 | 12-15 | CERn | Command Execute (Frame Start) Request | Logic 0 = All other time<br>Logic 1 = Execute Received this Block<br>Bits 15,14,13,12 = Levels 0,1,2,Star Sense |
| 18 | 11 | CMD CLK | Command Receipt Incomplete | Logic 0 = Fourth word received<br>Logic 1 = Data Ready pulse received (first of four) |
| 18 | 10 | CMD VALD | Command Valid | Logic 0 = Temporary register empty<br>Logic 1 = Complete command received in temporary register |
| 16 | 12-15 | CEAn | Command Execute Acknowledge | Logic 0 = Command complete<br>Logic 1 = Execute (Frame Start) received<br>Bits 15,14,13,12 = Levels 0,1,2,Star |
| 17 | 12-15 | CSn | Command Status | Logic 0 = Working register level empty or invalid, Logic 1 = Complete command in working register<br>Bits 15,14,13,12 = Levels 0,1,2,Star |
| 24 | 15 | L0 | Level 0 Active (Normal Sounding) | Logic 0 = Inactive<br>Logic 1 = Active Normal Sounding |
| 24 | 14 | L1 | Level I Active (Priority 2 Sounding) | Logic 0 = Inactive<br>Logic 1 = Active Priority 2 Sounding |

| Word | Bit(s) | Designator | Description | Content |
|---|---|---|---|---|
| 24 | 13 | L2 | Level 2 Active (Priority 1 Sounding) | Logic 0 = Inactive<br>Logic 1 = Active Priority 1 Sounding |
| 24 | 12 | L3 | Level 3 Active (Star Sense) | Logic 0 = Inactive<br>Logic 1 = Star Sense Active |
| 25 | 15 | SP | Space Look Active | Logic 0 = Inactive<br>Logic 1 = Space Look in progress |
| 25 | 14 | ECAL | ECAL Active | Logic 0 = Inactive<br>Logic 1 = ECAL In progress |
| 25 | 13 | BB | BB Cal Active | Logic 0 = Inactive<br>Logic 1 = BB Cal in progress |
| 25 | 12 | VDB | Valid Data Bit | Logic 0 = Inactive<br>Logic 1 = Valid Data in data block |
| 15<br>16 | 1-8<br>2-8 | X-START | E-W Axis Start Address | Cycle: MSB (15-bit6), LSB (15-bit8)<br>Increment: MSB (16-bit2), LSB (15-bit5) |
| 17<br>18 | 1-8<br>2-8 | X-STOP | E-W Axis Stop Address | Cycle: MSB (17-bit6), LSB (17-bit8)<br>Increment: MSB (18-bit2), LSB (18-bit5) |
| 20<br>21<br>22 | 1-8<br>1-8<br>6-8 | Y-START | N-S Axis Start Address | Cycle: MSB (20-bit2), LSB (20-bit8)<br>Increment: MSB (22-bit6), LSB (20-bit1) |
| 23<br>24<br>25 | 1-8<br>1-8<br>6-8 | Y-STOP | N-S Axis Stop Address | Cycle: MSB (23-bit2), LSB (23-bit8)<br>Increment: MSB (25-bit6), LSB (23-bit1) |
| 19 | 1 | SS | Star Sequence | Logic 0 = Not Star Sequence Command<br>Logic 1 = Star Sequence Command |
| 19 | 2 | CS | Calibration Suppress | Logic 0 = Calibration Enabled<br>Logic 1 = Calibration Inhibited |
| 19 | 3-4 | MODE | Step/Dwell Mode Indicator | M1 M0 Status<br>3 4<br>0 0 Single Step, 1 dwell<br>0 1 Single Step, 2 dwell<br>1 0 Single Step, 4 dwell<br>1 1 Double Step,1 dwell |
| 19 | 5-8 | Repeat | Requested Frame Repeat | MSB (19-bit5), LSB (19-bit8)<br>Does not change during repeat frames |
| 25 | 3-4 | CLIn | Command Level Identification* | LSB (25-bit4), MSB (25-bit3)<br>3 4 Level Frame<br>0 0 0 Normal<br>0 1 1 Priority 2<br>1 0 2 Priority I<br>1 1 3 Star |

* Command Level Cycles through all four levels in successive wideband data blocks.

5.1.4 Scan Control Status Word Layout

The Scan Control Status Words shall be compatible with the layout shown in Table 5.1.4-1.

**Table 5.1.4-1 Scan Control Status Word Layout**

| Bit: WORD | 1 | 2 | 3 | 4 | 5 | 6 | 7 | 8 | 9 | 10 | 11 | 12 | 13 | 14 | 15 | 16 |
|---|---|---|---|---|---|---|---|---|---|---|---|---|---|---|---|---|
| 15 | 4 | 3 | 2 | 1 | 0 | 14 | 13 | 12 | F0 | CAL EN | CAL DIS | Cer 3 | Cer 2 | Cer1 | Cer0 | P |
| 16 | SA | 11 | 10 | 9 | 8 | 7 | 6 | 5 | F0 | F0 | F0 | Cea 3 | Cea 2 | Cea 1 | Cea0 | P |
| 17 | 4 | 3 | 2 | 1 | 0 | 14 | 13 | 12 | F0 | F0 | F0 | CS 3 | CS 2 | CS1 | CS0 | P |
| 18 | F0 | 11 | 10 | 9 | 8 | 7 | 6 | 5 | F0 | CM D Vali d | CMD Clkg | Cla 3 | Cla 2 | Cla1 | Cla0 | P |
| 19 | SS | C3 | M1 | M0 | R3 | R2 | R1 | R0 | F0 | DC5 | DC4 | DC 3 | DC 2 | DC1 | DC0 | P |
| 20 | O | 18 | 17 | 16 | 15 | 14 | 13 | 12 | F0 | F0 | F0 | RC 3 | RC 2 | RC1 | RC0 | P |
| 21 | 8 | 7 | 6 | 5 | 4 | 3 | 2 | 1 | F0 | F0 | F0 | Ecl 3 | Ecl 2 | Ecl1 | Ecl0 | P |
| 22 | F0 | F0 | F0 | F0 | F0 | 11 | 10 | 9 | F0 | MOL | Scan RSet | NS GT | NS LT | EW GT | EWL T | P |
| 23 | O | 18 | 17 | 16 | 15 | 14 | 13 | 12 | F0 | NS Step | NS Slew | EW Slew | Pri or Sca n | Resv | Actv Scan | P |
| 24 | 8 | 7 | 6 | 5 | 4 | 3 | 2 | 1 | F0 | F0 | F0 | L3 | L2 | L1 | L0 | P |
| 25 | F0 | | CL 11 | CL 10 | F0 | 11 | 10 | 9 | F0 | F0 | F0 | VDB | BB | Ecal | SP | P |

## 5.2 Equipment Furnished

### 5.2.1 Agencies Responsible for Furnishing Specified Equipment

Equipment of various classifications shall be furnished by appropriate suppliers and agencies and includes both flight and non-flight equipment. Table 5.2.1-1 itemizes the equipment by category and name with the appropriate agency.

**Table 5.2.1-1 Equipment Furnished by Specified Agencies**

| Equipment Classification | Equipment Item Furnished | Agency Furnishing Item |
|---|---|---|
| **Mechanical/Thermal** | | |
| Non Flight | Sensor Module Tooling Plate | GFE |
| | Electronics Module Tooling Plate | ITT |
| | Power Supply Module Tooling Plate | ITT |
| | Instrument Protective Covers | ITT |
| | Lifting Fixtures | ITT |
| | | |
| Flight | Sensor Module Thermal Blankets | ITT |
| | Cooler Cover | ITT |
| **Electrical** | | |
| Non Flight | Connector Protective Covers | ITT |
| | | |
| Flight | Module Interconnect Cables | S/C Integrator |
| **Test** | | |
| | Test Execution System (TES) | ITT |
| | Wide Field Collimator | GSFC |
| | Calibration Targets | ITT |
| | Test Harness - TES to S/C GSE | S/C Integrator |
| | Narrow FOV Collimators | ITT |
| | Integrating Sphere | ITT |
| | Space Target(s) | ITT |
| | | |
| | | |

## 5.3 Environmental Design Requirements

### 5.3.1 General

Unless otherwise noted, the equipment shall be designed to meet the performance requirements specified herein prior to exposure, during exposure (where applicable), and after exposure to the environments specified herein. Environments experienced during equipment fabrication, transportation, and storage shall be controlled so as to be significantly less severe than the environments specified in Table 5.3.2-1, with the tolerances given in Table 5.3.2-2 and the following paragraphs. The spacecraft contractor shall not subject the instrument to environments that exceed the values shown in Table 5.3.2-1.

### 5.3.2 Mechanical Environments

The NOPQ Sounder Instrument shall be designed for exposure to the following environments.

#### 5.3.2.1 Relative Humidity

The NOPQ Sounder shall be designed for an environment that is between 30 - 60% relative humidity. This is the design requirement for the selection of materials and shall not be demonstrated or tested in any way.

#### 5.3.2.2 Barometric Pressure

The NOPQ Sounder shall be designed for an environment that is between $1 \times 10^{-10}$ Torr and 815 mm/Hg. The maximum barometric pressure increase shall be 14 mm/Hg/sec, and the maximum barometric pressure decrease shall be 56 .9 mm/Hg/sec. for the maximum decrease in barometric pressure, there shall be a 2X design margin as shown by analysis of a 1.12X margin demonstrated by test. The minimum pressure and the maximum barometric pressure increase requirements shall be used for detailed design and the selection of materials but shall not be demonstrated or tested in any way.

#### 5.3.2.3 Temperature

The NOPQ Sounder shall be designed and tested for the requirements given in Section 3.3.1.

#### 5.3.2.4 Structural Loads

Maximum flight loads for the Sounder Sensor Module, Electronics Module, and Power Supply Module shall not exceed the nominal values defined in Table 5.3.2-3 through Table 5.3.2-5 and Figure 5.3.2-1 through Figure 5.3.2-8. Except where noted, Instrument Acceptance levels are 25% higher than the levels shown in these tables, and instrument Qualification levels are 25% higher than the instrument Acceptance levels. An instrument that has been exposed to only instrument acceptance levels shall not be exposed to spacecraft qualification levels.

In addition, the maximum allowable lateral (in the mounting plane: x- and y-axes) and axial (perpendicular to the mounting plane: z-axis) forces and bending moments at any one of the Sensor Module mounting feet shall not exceed:

a. $F_{+x,-x} = 150$ lbs

b. $F_{+y,-y} = 524$ lbs

c. $F_{+z,-z} = 1987$ lbs

d. $M_x = 1239$ in-lbs

e. $M_y = 1518$ in-lbs

where the coordinate system is as defined in Figure 3.1.1-1. The combined load condition for a given foot shall not exceed the following equations:

$$\cancel{\left|\frac{\text{Axial}}{1230}\right| + \left|\frac{\text{Shear}}{450}\right| + \left|\frac{\text{Moment}}{769}\right| < 1}$$

$$\sqrt{(F_x)^2 + (F_y)^2} < 450$$

$$\left|\frac{F_x}{1150}\right| + \left|\frac{F_z}{1987}\right| + \left|\frac{M_y}{1518}\right| < 1$$

$$\left|\frac{F_y}{524}\right| + \left|\frac{F_z}{1987}\right| + \left|\frac{M_x}{1239}\right| < 1$$

Table 5.3.2-6 shall be used for detailed design but shall not be demonstrated or tested in any way.

The Sounder shall not be subjected to a spin rate exceeding 3.8 radians/second (36 RPM) or 3g's maximum acceleration as a result of the spin rate during launch operations.

**Table 5.3.2-1 Environment Requirements Summary**

| Item | Description | MIN | MAX | OP(I) |
|---|---|---|---|---|
| 1. | Relative Humidity (7) | 30%* | 60% | O/N |
| 2. | Barometric Pressure (7) | | | |
| | Steady State<br>Increasing<br>Decreasing | 1 x 10-10 torr | 815 mm/Hg<br>14 mm Hg/sec<br>~~56.9 mm Hg/sec (9)~~ | O/N |
| 3. | Temperature, °C | (10) | (10) (8) | |
| 4. | Vibration | | | |
| 4a. | Random | Table 5.3.2-3 | | O/N |
| 4b. | Sine | Table 5.3.2-4 | | O/N |
| 5. | Shock | Table 5.3.2-5 | | (11) |
| 6. | Acoustic Noise (7) | Table 5.3.2-6 | | O/N |
| 7. | Transportation (5)(7) | Air<br>Rail | Ship<br>Highway (Truck) | N |

| NOTES | |
|---|---|
| (1) | Operating Mode |
| | 0 = Operating (power applied)<br>N = Non Operating<br>O/N = Operating and/or Non Operating |
| (2) | Deleted |
| (3) | over mission lifetime. |
| (4) | Deleted. |
| (5) | When packaged per Statement of Work. |
| (6) | Deleted |
| (7) | Design Requirement Only. |
| (8) | IR Detectors not to exceed 65 °C at any time. |
| (9) | Design analysis must show a margin factor of X 2, otherwise testing is required to a factor of X 1.12 |
| (10) | Refer to Table 3.3.1-1. |
| (11) | Filter Wheel motor only running. |
| | |
| | * 0% with special ESD precautions |
| | ** PSM = Power Supply Module |

**Table 5.3.2-2 Tolerance on Test Conditions**

| | |
|---|---|
| Temperature | ± 2 °C |
| Atmospheric Pressure | ± 5 % greater than $1.3 \times 10^4$ Pa<br>( greater than 100 mm Hg )<br>± 10 % $1.3 \times 10^4$ to $1.3 \times 10^2$ Pa<br>( 100 mm Hg to 1 mm Hg )<br>± 25 % $1.3 \times 10^2$ to $1.3 \times 10^{-1}$ Pa<br>( 1 mm Hg to 1 micron )<br>± 80 % less than $1.3 \times 10^{-1}$ Pa<br>( less than 1 micron ) |
| Relative Humidity | ± 5 % |
| Random Vibration | |
| RMS Level | ± 10 % |
| Power Spectral Density | ± 3 dB 20 to 2000 Hz |
| Sine Vibration | |
| Amplitude | ± 10 % |
| Frequency | ± 2 % |
| Shock - Response Spectrum | ± 3 dB |
| Electromagnetic Compatibility | |
| Voltage Magnitude | ± 5 % of peak value |
| Current Magnitude | ± 5 % of peak value |
| RF Amplitudes | ± 2 dB |
| Frequency | ± 2 % |
| Distance | ± 5 % of specified distance or<br>± 5 cm, whichever is greater |

**Table 5.3.2-3 Allowable Sounder Random Vibration Inputs from the Spacecraft (Acceptance)**

| Test Axis | Frequency (Hz) | Sensor Module Random Vibe Levels ($g^2$/Hz) |
|---|---|---|
| XYZ | 20 | 0.00096 |
| | 20 - 80 | +6 dB/oct |
| | 80 - 1000 | 0.0128 |
| | 1000 - 2000 | -3 dB/oct |
| | 2000 | 0.0064 |
| | overall | 4.6 Grms |

| Test Axis | Frequency (Hz) | Electronics Module Random Vibe Levels ($g^2$/Hz) |
|---|---|---|
| XYZ | 20 | 0.0064 |
| | 20 - 150 | +3 dB/oct |
| | 150 - 250 | 0.0512 |
| | 250 - 2000 | -3 dB/oct |
| | 2000 | 0.0064 |
| | overall | 6.0 Grms |

| Test Axis | Frequency (Hz) | Power Supply Module Random Vibe Levels ($g^2$/Hz) | |
|---|---|---|---|
| | | X & Z | Y |
| XYZ | 20 | 0.0051 | 0.012 |
| | 20 - 50 | +6 dB/oct | +6 dB/oct |
| | 50 - 600 | 0.032 | 0.064 |
| | 600 - 2000 | -4.5 dB/oct | -4.5 dB/oct |
| | 2000 | 0.0051 | 0.012 |
| | overall | X & Z = 6.0 Grms, Y = 8.4 Grms | |

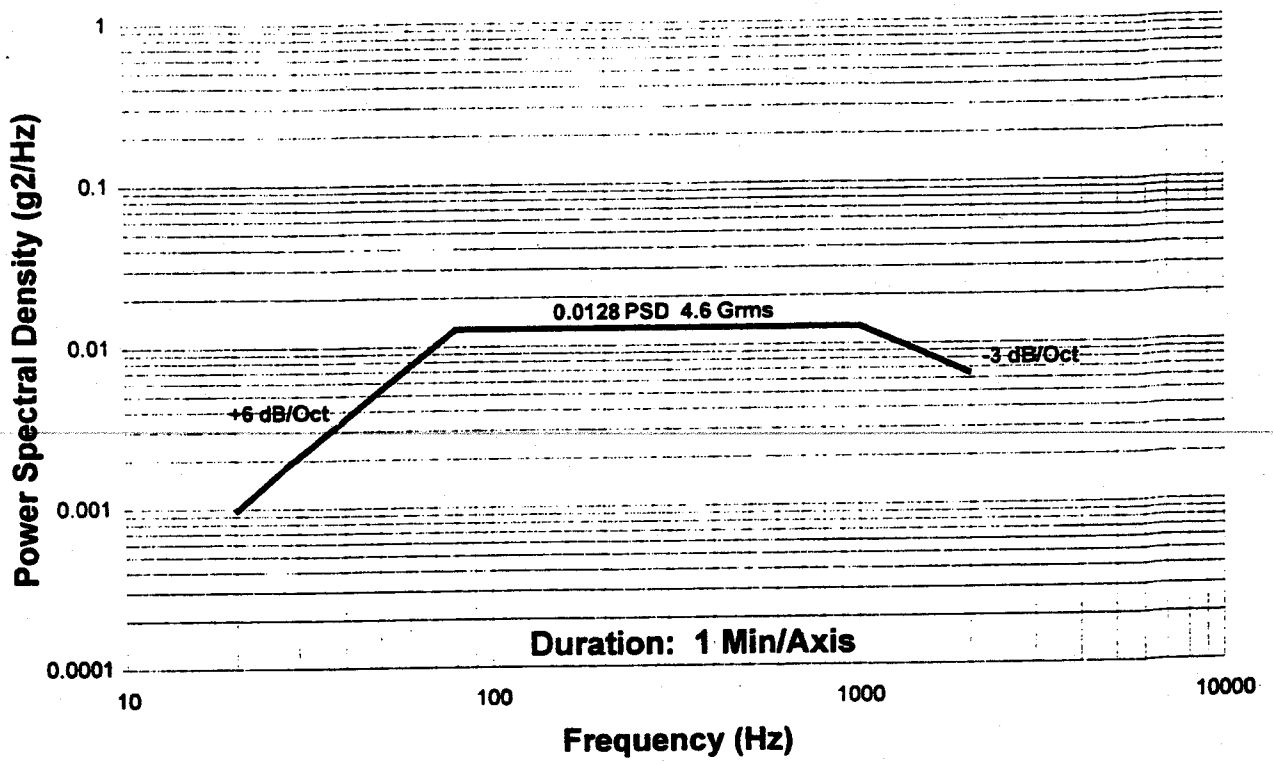


**Figure 5.3.2-1 Allowable Sensor Module Random Vibration Level Inputs from the Spacecraft**

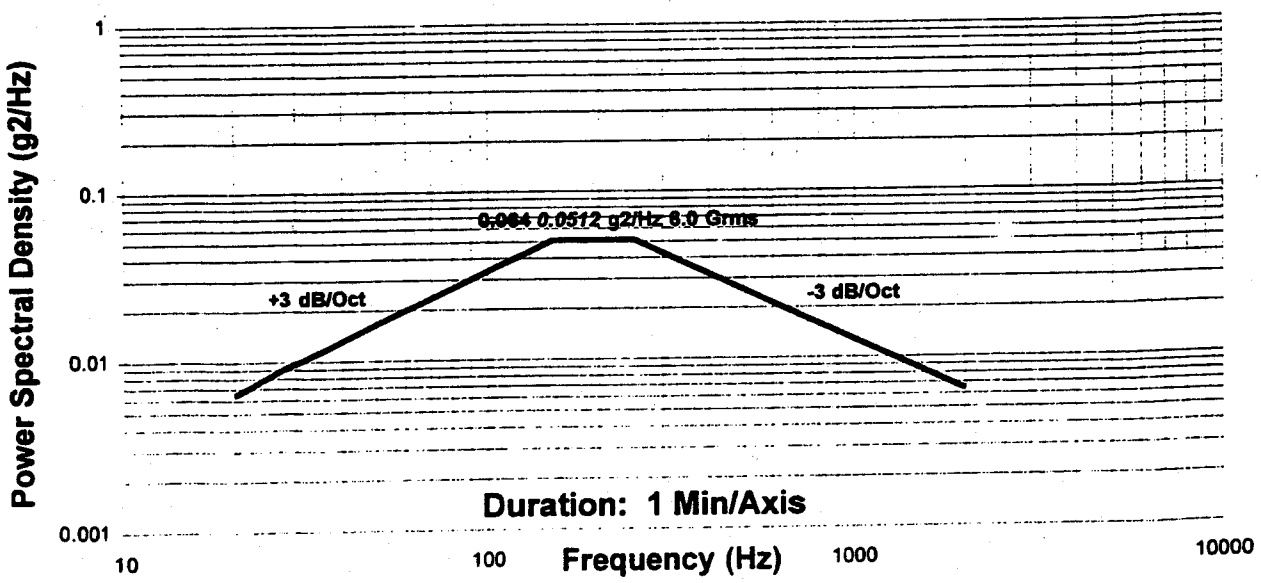


**Figure 5.3.2-2 Allowable Electronics Module Random Vibration Level Inputs from the Spacecraft**

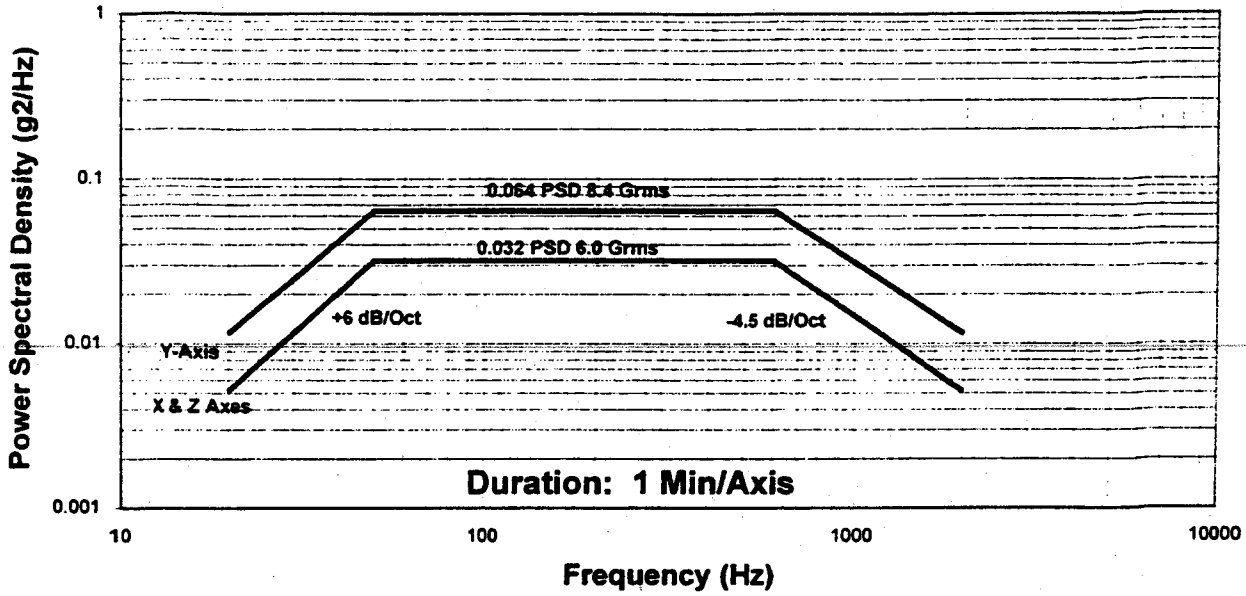


**Figure 5.3.2-3 Allowable Power Supply Module Random Vibration Level Inputs from the Spacecraft**

**Table 5.3.2-4 Allowable Sounder Sine Vibration Inputs from the Spacecraft (Acceptance)**

| Test Axis | Frequency (Hz) | Sensor Module Sine Vibe Levels |
|---|---|---|
| X | 5 - 15.5<br>15.5 - 25<br>25 - 40 | 0.4 in D. A. (1)<br>6.1 g (1)<br>2.3 g |
| Y | 5 - 15.5<br>15.5 - 20<br>20 - 25<br>25 - 40 | 0.4 in D. A. (1)<br>6.1 g (1)<br>4.5 g<br>2.2 g |
| Z | 5 - 15.5<br>15.5 - 20<br>20 - 25<br>25 - 40 | 0.4 in D. A. (1)<br>6.1 g (1)<br>3.8 g<br>1.7 g |
| **Test Axis** | **Frequency (Hz)** | **Electronics Module and Power Supply Module Sine Vibe Levels** |
| XYZ | 5 - 25<br>25 - 50<br>50 - 100 | 0.4 in D. A.(1)<br>9.6 g<br>3.2 g |

D. A. = Double Amplitude
(1) 0% margin from instrument Acceptance Level to spacecraft qual

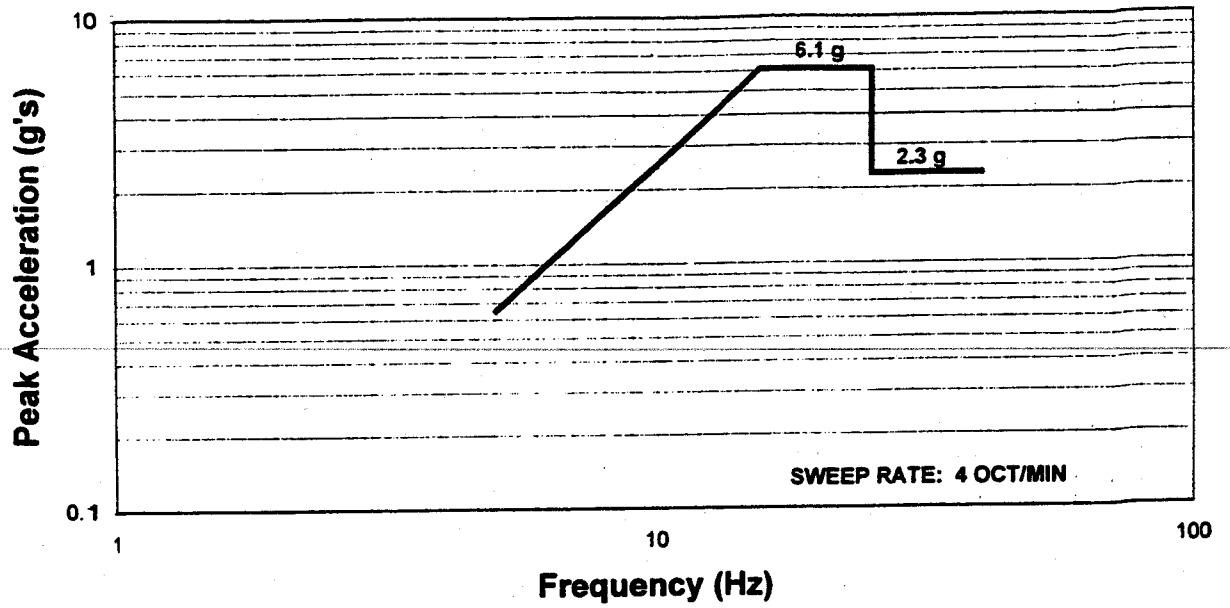


**Figure 5.3.2-4 Allowable Sensor Module Sine Vibration Inputs from the Spacecraft (X-axis)**

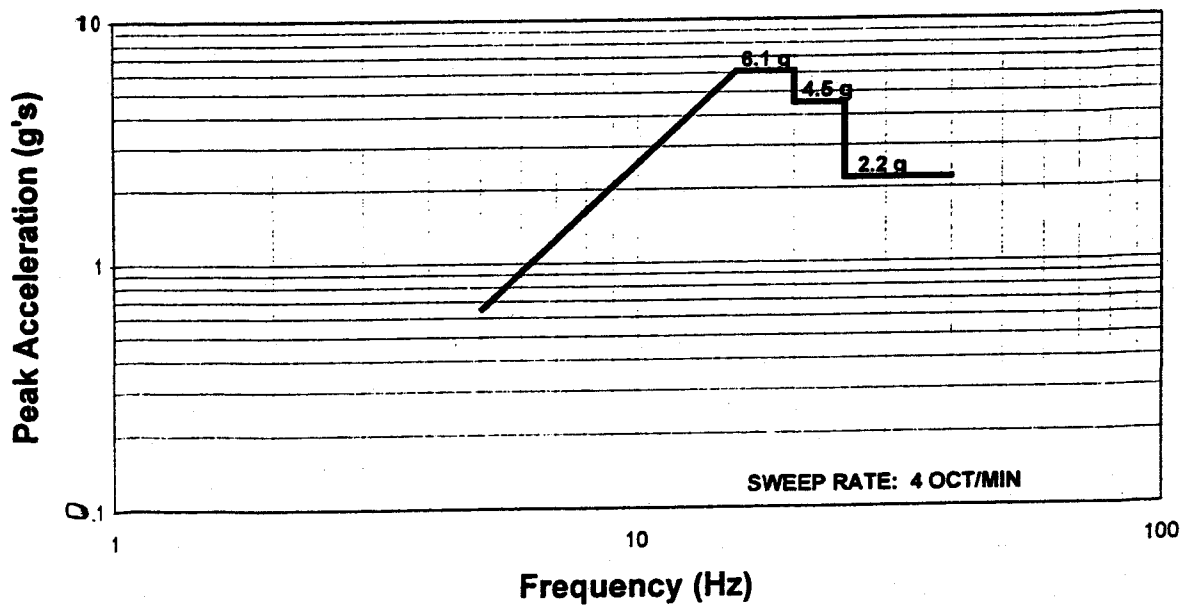


**Figure 5.3.2-5 Allowable Sensor Module Sine Vibration Inputs from the Spacecraft (Y-axis)**

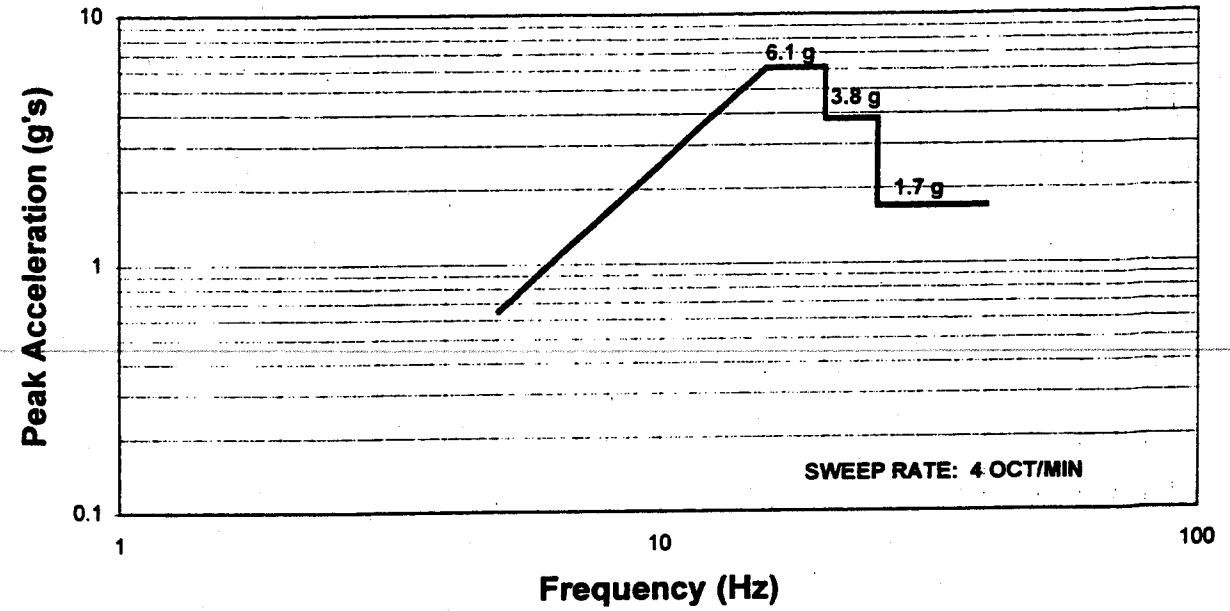


**Figure 5.3.2-6 Allowable Sensor Module Sine Vibration Inputs from the Spacecraft (Z-axis)**

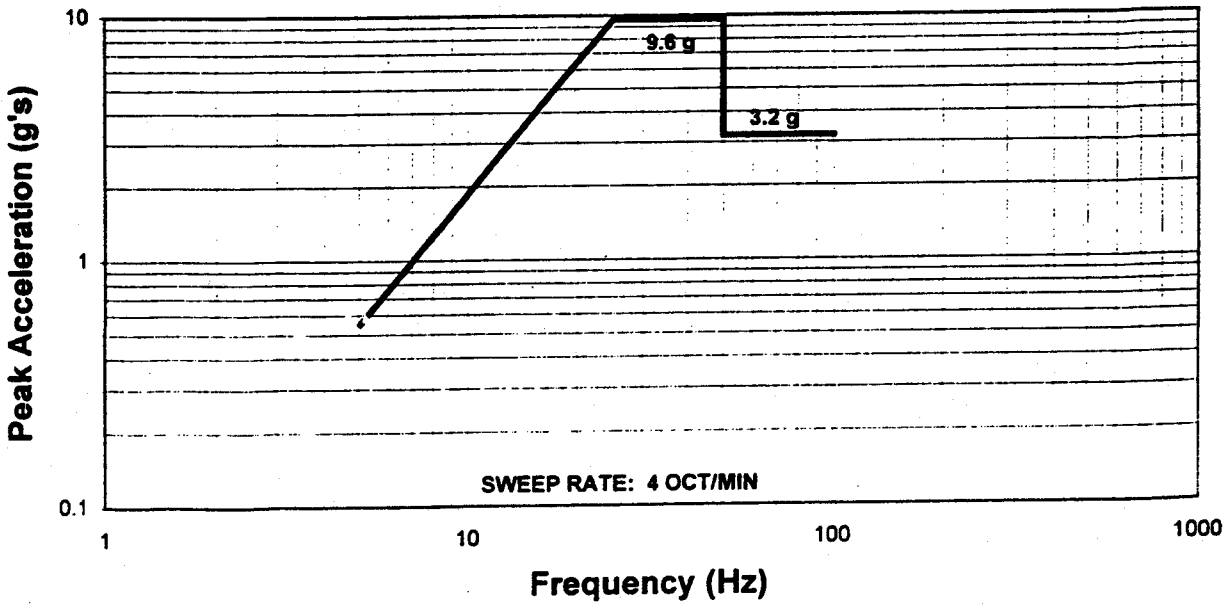


**Figure 5.3.2-7 Allowable Electronics and Power Supply Module Sine Vibration Inputs from the Spacecraft (all axes)**

**Table 5.3.2-5 Allowable Sounder Shock Response Inputs from the Spacecraft (Qualification and Acceptance)**

| Test Axis | Frequency (Hz) | Sensor, Electronics and Power Supply Modules Shock Response Levels (g) |
|---|---|---|
| XYZ | 200 | 23 |
| | 400 - 1600 | 90 |
| | 2000 - 4000 | 120 |

Q = 10

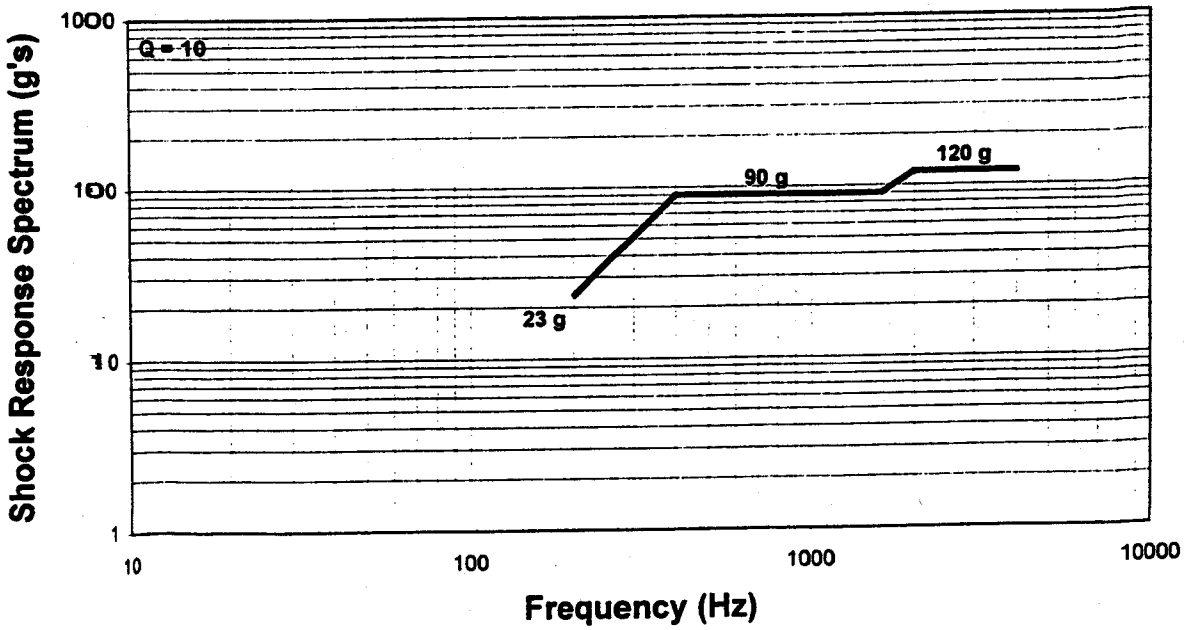


**Figure 5.3.2-8 Allowable Sensor, Electronics and Power Supply Module Shock Response Spectrum from the Spacecraft**

**Table 5.3.2-6 Acoustic Environment**

| 1/3 Octave Band Center Freq (Hz) | Acoustic Sound Pressure Level (dB) (0 dB = 20 micropascal) | | |
|---|---|---|---|
| | Acceptance | Qualification | Tolerance |
| 25 | 112.4 | 115.4 | +6/-5 |
| 31.5 | 116.3 | 119.3 | +6/-5 |
| 40 | 120.8 | 123.8 | +6/-4 |
| 50 | 122.1 | 125.1 | +5/-4 |
| 63 | 123.4 | 126.4 | +5/-4 |
| 80 | 124.7 | 127.7 | ±4 |
| 100 | 126.1 | 129.1 | ±3 |
| 125 | 127.4 | 130.4 | ±3 |
| 160 | 127.5 | 130.5 | ±3 |
| 200 | 127.7 | 130.7 | ±3 |
| 250 | 127.8 | 130.8 | ±3 |
| 315 | 128.0 | 131.0 | ±3 |
| 400 | 128.2 | 131.2 | ±3 |
| 500 | 128.2 | 131.2 | ±3 |
| 630 | 128.0 | 131.0 | ±3 |
| 800 | 123.8 | 126.8 | ±3 |
| 1000 | 120.2 | 123.2 | ±3 |
| 1250 | 119.0 | 122.0 | ±4 |
| 1600 | 119.0 | 122.0 | ±4 |
| 2000 | 119.0 | 122.0 | ±4 |
| 2500 | 117.4 | 120.4 | ±4 |
| 3150 | 115.9 | 118.9 | +5/-4 |
| 4000 | 114.3 | 117.3 | +6/-4 |
| 5000 | 112.7 | 115.7 | +6/-4 |
| 6300 | 111.1 | 114.1 | +8/-4 |
| 8000 | 109.6 | 112.6 | +8/-4 |
| 10000 | 108.0 | 111.0 | +8/-4 |
| Overall | 138.3 | 141.3 | ±1 |
| Test Duration | One Minute | | -0/+6 sec |

## 5.4 Instrument Wire List / Pin Assignments

| Module | J# | Pin# | Signal Name | Signal Description | Wire Size (AWG) | Wire Type | Signal Type | ICD Para. Reference |
|---|---|---|---|---|---|---|---|---|
| 2A4 | J1 | 1 | KEY | Key | | | Internal | |
| 2A4 | J1 | 2 | BSPLT.1.THERM | Sensor Assy Baseplate Thermistor #1 | 24 | Single | Internal | |
| 2A4 | J1 | 3 | BSPLT.2.THERM | Sensor Assy Baseplate Thermistor #2 | 24 | Single | Internal | |
| 2A4 | J1 | 4 | BSPLT.3.THERM | Sensor Assy Baseplate Thermistor #3 | 24 | Single | Internal | |
| 2A4 | J1 | 5 | BSPLT.4.THERM | Sensor Assy Baseplate Thermistor #4 | 24 | Single | Internal | |
| 2A4 | J1 | 6 | BSPLT.5.THERM | Sensor Assy Baseplate Thermistor #5 | 24 | Single | Internal | |
| 2A4 | J1 | 7 | BSPLT.6.THERM | Sensor Assy Baseplate Thermistor #6 | 24 | Single | Internal | |
| 2A4 | J1 | 8 | B.B.#1.THERM | Blackbody Target Thermistor #1 | 24 | Single | Internal | |
| 2A4 | J1 | 9 | B.B.#2.THERM | Blackbody Target Thermistor #2 | 24 | Single | Internal | |
| 2A4 | J1 | 10 | B.B.#3.THERM | Blackbody Target Thermistor #3 | 24 | Single | Internal | |
| 2A4 | J1 | 11 | B.B.#4.THERM | Blackbody Target Thermistor #4 | 24 | Single | Internal | |
| 2A4 | J1 | 12 | B.B.#5.THERM | Blackbody Target Thermistor #5 | 24 | Single | Internal | |
| 2A4 | J1 | 13 | B.B.#6.THERM | Blackbody Target Thermistor #6 | 24 | Single | Internal | |
| 2A4 | J1 | 14 | B.B.#7.THERM | Blackbody Target Thermistor #7 | 24 | Single | Internal | |
| 2A4 | J1 | 15 | B.B.#8.THERM | Blackbody Target Thermistor #8 | 24 | Single | Internal | |
| 2A4 | J1 | 16 | KEY | Key | | | Internal | |
| 2A4 | J1 | 17 | TEL.PRI.THERM | Telescope Primary Thermistor | 24 | Single | Internal | |
| 2A4 | J1 | 18 | TEL.SEC.THERM | Telescope Secondary Thermistor #1 | 24 | Single | Internal | |
| 2A4 | J1 | 19 | TEL.SEC.THERM2 | Telescope Secondary Thermistor #2 | 24 | Single | Internal | |
| 2A4 | J1 | 20 | BAF.PRI.PRT1 | Primary Baffle Thermistor #1 | 24 | Single | Internal | |
| 2A4 | J1 | 21 | BAF.PRI.PRT2 | Primary Baffle Thermistor #2 | 24 | Single | Internal | |
| 2A4 | J1 | 22 | SCAN.MIR.THERM | Scan Mirror Thermistor | 24 | Single | Internal | |
| 2A4 | J1 | 23 | AFT.OPT.THERM | AFT Optics Thermistor | 24 | Single | Internal | |
| 2A4 | J1 | 24 | LVR.RAD.THERM | Louver Radiator Thermistor | 24 | Single | Internal | |
| 2A4 | J1 | 25 | CLR.HSG.PRT | Cooler Housing Thermistor | 24 | Single | Internal | |
| 2A4 | J1 | 26 | CLR.RAD.PRT | Cooler Radiator Thermistor | 24 | Single | Internal | |
| 2A4 | J1 | 27 | WR.PATCH.PRT | Wide Range Patch Thermistor | 24 | Single | Internal | |
| 2A4 | J1 | 28 | DIV.HRBUS.VOLT | Heater Bus +43V Telemetry | 26 | Single | Internal | |
| 2A4 | J1 | 29 | BSP1.ON.SC.BAR | Thermal Control No 1 ON/OFF Status | 26 | Single | Internal | |
| 2A4 | J1 | 30 | BSP2.ON.SC.BAR | Thermal Control No 2 ON/OFF Status | 26 | Single | Internal | |
| 2A4 | J1 | 31 | +SENSE.A | Thermal Control Current #1 | 26 | Single | Internal | |
| 2A4 | J1 | 32 | +SENSE.B | Thermal Control Current #2 | 26 | Single | Internal | |
| 2A4 | J1 | 33 | +SENSE.C | Thermal Control Current #3 | 26 | Single | Internal | |
| 2A4 | J1 | 34 | +SENSE.D | Thermal Control Current #4 | 26 | Single | Internal | |
| 2A4 | J1 | 35 | +SENSE.E | Thermal Control Current #5 | 26 | Single | Internal | |
| 2A4 | J1 | 36 | +SENSE.F | Thermal Control Current #6 | 26 | Single | Internal | |
| 2A4 | J1 | 37 | -SENSE | Thermal Control Current Return | 26 | Single | Internal | |
| 2A4 | J1 | 38 | BSP1.LO.SC | Thermal Control HIGH/LOW Select Status | 26 | Single | Internal | |
| 2A4 | J1 | 39 | RCOG.LO.SC | Cooler Outgas HIGH/LOW Select Status | 26 | Single | Internal | |
| 2A4 | J1 | 40 | RCOG.ON.SC.BAR | Cooler Outgas ON/OFF Status | 26 | Single | Internal | |
| 2A4 | J1 | 41 | PTCH.HTR.RN.EB | Patch Control Heater Return | 26 | Single | Internal | |
| 2A4 | J1 | 42 | GROUND | Electronics Module Ground | 24 | Single | Internal | |
| 2A4 | J1 | 43 | FW.MOTOR.THERM | Filter Wheel Motor Thermistor | 24 | Single | Internal | |
| 2A4 | J1 | 44 | FW.RAD.PRT | Filter Wheel Radiator Thermistor | 24 | Single | Internal | |
| 2A4 | J1 | 45 | FW.HSG.PRT | Filter Wheel Housing Thermistor | 24 | Single | Internal | |
| 2A4 | J1 | 46 | FWCNT.SC.BAR | Filter Wheel Control ON/OFF Status | 26 | Single | Internal | |
| 2A4 | J1 | 47 | COMPOSIT.A | Composite A | 26 | Single | Internal | |
| 2A4 | J1 | 48 | COMPOSIT.B | Composite B | 26 | Single | Internal | |
| 2A4 | J1 | 49 | FW.MOTOR1.C | Filter Wheel Motor Current #1 | 26 | Single | Internal | |
| 2A4 | J1 | 50 | FW.MOTOR2.C | Filter Wheel Motor Current #2 | 26 | Single | Internal | |

| Module | J# | Pin# | Signal Name | Signal Description | Wire Size (AWG) | Wire Type | Signal Type | ICD Para. Reference |
|---|---|---|---|---|---|---|---|---|
| 2A4 | J2 | 1 | LWPA.ECAL1.A | Longwave Preamp Electronic Cal 1 Side 1 | 26 | Single | Internal | |
| 2A4 | J2 | 2 | +10V.REF.#1 | +10V Reference #1 | 26 | Single | Internal | |
| 2A4 | J2 | 3 | LW.WEB1.#1 | Longwave Web 1 #1 | 26 | Single | Internal | |
| 2A4 | J2 | 4 | | Unused | | | Internal | |
| 2A4 | J2 | 5 | +10V.REF.#2 | +10V Reference #2 | 26 | Single | Internal | |
| 2A4 | J2 | 6 | LW.WEB2.#2 | Longwave Web 2 #2 | 26 | Single | Internal | |
| 2A4 | J2 | 7 | | Unused | | | Internal | |
| 2A4 | J2 | 8 | +10V.REF.#3 | +10V Reference #3 | 26 | Single | Internal | |
| 2A4 | J2 | 9 | LW.WEB1.#3 | Longwave Web 1 #3 | 26 | Single | Internal | |
| 2A4 | J2 | 10 | | Unused | | | Internal | |
| 2A4 | J2 | 11 | +10V.REF.#4 | +10V Reference #4 | 26 | Single | Internal | |
| 2A4 | J2 | 12 | LW.WEB2.#4 | Longwave Web 2 #4 | 26 | Single | Internal | |
| 2A4 | J2 | 13 | GROUND | Electronics Module Ground | 24 | Single | Internal | |
| 2A4 | J2 | 14 | LWPA.ECAL2.A | Longwave Preamp Electronic Cal 2 Side 1 | 26 | Single | Internal | |
| 2A4 | J2 | 15 | MWPA.ECAL1.B | Midwave Preamp Electronic Cal 1 Side 2 | 26 | Single | Internal | |
| 2A4 | J2 | 16 | MWPA.ECAL2.B | Midwave Preamp Electronic Cal 2 Side 2 | 26 | Single | Internal | |
| 2A4 | J2 | 17 | LWPA.ECAL1.B | Longwave Preamp Electronic Cal 1 Side 2 | 26 | Single | Internal | |
| 2A4 | J2 | 18 | KEY | Key | | | Internal | |
| 2A4 | J2 | 19 | +10VAB.#1 | +10VAB #1 | 26 | Single | Internal | |
| 2A4 | J2 | 20 | | Unused | | | Internal | |
| 2A4 | J2 | 21 | SW.WEB1.#1 | Shortwave Web 1 #1 | 26 | Single | Internal | |
| 2A4 | J2 | 22 | +10VAB.#2 | +10VAB #2 | 26 | Single | Internal | |
| 2A4 | J2 | 23 | | Unused | | | Internal | |
| 2A4 | J2 | 24 | SW.WEB2.#2 | Shortwave Web 2 #2 | 26 | Single | Internal | |
| 2A4 | J2 | 25 | +10VAB.#3 | +10VAB #3 | 26 | Single | Internal | |
| 2A4 | J2 | 26 | | Unused | | | Internal | |
| 2A4 | J2 | 27 | SW.WEB1.#3 | Shortwave Web 1 #3 | 26 | Single | Internal | |
| 2A4 | J2 | 28 | +10VAB.#4 | +10VAB #4 | 26 | Single | Internal | |
| 2A4 | J2 | 29 | | Unused | | | Internal | |
| 2A4 | J2 | 30 | SW.WEB2.#4 | Shortwave Web 2 #4 | 26 | Single | Internal | |
| 2A4 | J2 | 31 | LWPA.ECAL2.B | Longwave Preamp Electronic Cal 2 Side 2 | 26 | Single | Internal | |
| 2A4 | J2 | 32 | SWPA.ECAL1.A | Shortwave Preamp Electronic Cal 1 Side 1 | 26 | Single | Internal | |
| 2A4 | J2 | 33 | KEY | Key | | | Internal | |
| 2A4 | J2 | 34 | SWPA.ECAL2.A | Shortwave Preamp Electronic Cal 2 Side 1 | 26 | Single | Internal | |
| 2A4 | J2 | 35 | +15VAB.BIAS.#1 | +15VAB Bias #1 | 26 | Single | Internal | |
| 2A4 | J2 | 36 | MW.WEB1.#1 | Midwave Web 1 #1 | 26 | Single | Internal | |
| 2A4 | J2 | 37 | | Unused | | | Internal | |
| 2A4 | J2 | 38 | +15VAB.BIAS.#2 | +15VAB Bias #2 | 26 | Single | Internal | |
| 2A4 | J2 | 39 | MW.WEB2.#2 | Midwave Web 2 #2 | 26 | Single | Internal | |
| 2A4 | J2 | 40 | | Unused | | | Internal | |
| 2A4 | J2 | 41 | +15VAB.BIAS.#3 | +15VAB Bias #3 | 26 | Single | Internal | |
| 2A4 | J2 | 42 | MW.WEB1.#3 | Midwave Web 1 #3 | 26 | Single | Internal | |
| 2A4 | J2 | 43 | | Unused | | | Internal | |
| 2A4 | J2 | 44 | +15VAB.BIAS.#4 | +15VAB Bias #4 | 26 | Single | Internal | |
| 2A4 | J2 | 45 | MW.WEB2.#4 | Midwave Web 2 #4 | 26 | Single | Internal | |
| 2A4 | J2 | 46 | GROUND | Electronics Module Ground | 24 | Single | Internal | |
| 2A4 | J2 | 47 | MWPA.ECAL1.A | Midwave Preamp Electronic Cal 1 Side 1 | 26 | Single | Internal | |
| 2A4 | J2 | 48 | SWPA.ECAL1.B | Shortwave Preamp Electronic Cal 1 Side 2 | 26 | Single | Internal | |
| 2A4 | J2 | 49 | MWPA.ECAL2.A | Midwave Preamp Electronic Cal 2 Side 1 | 26 | Single | Internal | |
| 2A4 | J2 | 50 | SWPA.ECAL2.B | Shortwave Preamp Electronic Cal 2 Side 2 | 26 | Single | Internal | |

| Module | J# | Pin# | Signal Name | Signal Description | Wire Size (AWG) | Wire Type | Signal Type | ICD Para. Reference |
|---|---|---|---|---|---|---|---|---|
| 2A4 | J3 | 1 | NS.MITLM.A | N-S Motor Current Telemetry Side 1 | 26 | TS(1,18) | Internal | |
| 2A4 | J3 | 2 | KEY | Key | | | Internal | |
| 2A4 | J3 | 3 | EW.X1.PO.B | E-W X1 Preamp Output Side 2 | 26 | TS(3,4,20) | Internal | |
| 2A4 | J3 | 4 | EW.X1.PO.RTN.B | E-W X1 Preamp Output Return Side 2 | 26 | TS(3,4,20) | Internal | |
| 2A4 | J3 | 5 | EW.X1.PO.A | E-W X1 Preamp Output Side 1 | 26 | TS(5,6,22) | Internal | |
| 2A4 | J3 | 6 | EW.X1.PO.RTN.A | E-W X1 Preamp Output Return Side 1 | 26 | TS(5,6,22) | Internal | |
| 2A4 | J3 | 7 | EW.MITLM.A | E-W Motor Current Telemetry Side 1 | 26 | TS(7,8) | Internal | |
| 2A4 | J3 | 8 | EW.MITLM.RTN.A | E-W Motor Current Telemetry Return Side 1 | 26 | TS(7,8) | Internal | |
| 2A4 | J3 | 9 | EW.MITLM.B | E-W Motor Current Telemetry Side 2 | 26 | TS(9,10) | Internal | |
| 2A4 | J3 | 10 | EW.MITLM.RTN.B | E-W Motor Current Telemetry Return Side 2 | 26 | TS(9,10) | Internal | |
| 2A4 | J3 | 11 | MOL.A | Motor Overload Side 1 | 26 | Single | S/C, Motor Overload | 3.5.5.2 |
| 2A4 | J3 | 12 | EW.X128.P.RN.B | E-W X128 Preamp Output Return Side 2 | 26 | TS(12,13,29) | Internal | |
| 2A4 | J3 | 13 | EW.X128.PO.B | E-W X128 Preamp Output Side 2 | 26 | TS(12,13,29) | Internal | |
| 2A4 | J3 | 14 | EW.X128.P.RN.A | E-W X128 Preamp Output Return Side 1 | 26 | TS(14,15,31) | Internal | |
| 2A4 | J3 | 15 | EW.X128.PO.A | E-W X128 Preamp Output Side 1 | 26 | TS(14,15,31) | Internal | |
| 2A4 | J3 | 16 | | Unused | | | Internal | |
| 2A4 | J3 | 17 | NS.MITLM.B | N-S Motor Current Telemetry Side 2 | 26 | TS(17,33) | Internal | |
| 2A4 | J3 | 18 | NS.MITLM.RTN.A | N-S Motor Current Telemetry Return Side 1 | 26 | TS(1,18) | Internal | |
| 2A4 | J3 | 19 | | Unused | | | Internal | |
| 2A4 | J3 | 20 | EW.X1.PO.SLD.B | E-W X1 Preamp Output Shield Side 2 | 26 | TS(3,4,20) | Internal | |
| 2A4 | J3 | 21 | NS.X1.PO.SLD.B | N-S X1 Preamp Output Shield Side 2 | 26 | TS(21,37,38) | Internal | |
| 2A4 | J3 | 22 | EW.X1.PO.SLD.A | E-W X1 Preamp Output Shield Side 1 | 26 | TS(5,6,22) | Internal | |
| 2A4 | J3 | 23 | NS.X1.PO.SLD.A | N-S X1 Preamp Output Shield Side 1 | 26 | TS(23,39,40) | Internal | |
| 2A4 | J3 | 24 | | Unused | | | Internal | |
| 2A4 | J3 | 25 | SCAN.V.ON.A | Scan Voltage ON Side 1 | 26 | Single | Internal | |
| 2A4 | J3 | 26 | | Unused | | | Internal | |
| 2A4 | J3 | 27 | MOL.B | Motor Overload Side 2 | 26 | Single | S/C, Motor Overload | 3.5.5.2 |
| 2A4 | J3 | 28 | NS.X128.P.SD.B | N-S X128 Preamp Output Shield Side 2 | 26 | TS(28,44,45) | Internal | |
| 2A4 | J3 | 29 | EW.X128.P.SD.B | E-W X128 Preamp Output Shield Side 2 | 26 | TS(12,13,29) | Internal | |
| 2A4 | J3 | 30 | NS.X128.P.SD.A | N-S X128 Preamp Output Shield Side 1 | 26 | TS(30,46,47) | Internal | |
| 2A4 | J3 | 31 | EW.X128.P.SD.A | E-W X128 Preamp Output Shield Side 1 | 26 | TS(14,15,31) | Internal | |
| 2A4 | J3 | 32 | | Unused | | | Internal | |
| 2A4 | J3 | 33 | NS.MITLM.RTN.B | N-S Motor Current Telemetry Return Side 2 | 26 | TS(17,33) | Internal | |
| 2A4 | J3 | 34 | | Unused | | | Internal | |
| 2A4 | J3 | 35 | *TEL.SEC.TMP3* | *Telescope Secondary Temp No.3* | *26* | *Single* | Internal | |
| 2A4 | J3 | 36 | | Unused | | | Internal | |
| 2A4 | J3 | 37 | NS.X1.PO.B | N-S X1 Preamp Output Side 2 | 26 | TS(21,37,38) | Internal | |
| 2A4 | J3 | 38 | NS.X1.PO.RTN.B | N-S X1 Preamp Output Return Side 2 | 26 | TS(21,37,38) | Internal | |
| 2A4 | J3 | 39 | NS.X1.PO.A | N-S X1 Preamp Output Side 1 | 26 | TS(23,39,40) | Internal | |
| 2A4 | J3 | 40 | NS.X1.PO.RTN.A | N-S X1 Preamp Output Return Side 1 | 26 | TS(23,39,40) | Internal | |
| 2A4 | J3 | 41 | SCAN.V.ON.B | Scan Voltage ON Side 2 | 26 | Single | Internal | |
| 2A4 | J3 | 42 | SCAN.A.NOT.UP | Scan Not Up Side 2 | 26 | Single | Internal | |
| 2A4 | J3 | 43 | SCAN.B.NOT.UP | Scan Not Up Side 1 | 26 | Single | Internal | |
| 2A4 | J3 | 44 | NS.X128.PO.B | N-S X128 Preamp Output Side 2 | 26 | TS(28,44,45) | Internal | |
| 2A4 | J3 | 45 | NS.X128.P.RN.B | N-S X128 Preamp Output Return Side 2 | 26 | TS(28,44,45) | Internal | |
| 2A4 | J3 | 46 | NS.X128.PO.A | N-S X128 Preamp Output Side 1 | 26 | TS(30,46,47) | Internal | |
| 2A4 | J3 | 47 | NS.X128.P.RN.A | N-S X128 Preamp Output Return Side 1 | 26 | TS(30,46,47) | Internal | |
| 2A4 | J3 | 48 | | Unused | | | Internal | |
| 2A4 | J3 | 49 | | Unused | | | Internal | |
| 2A4 | J3 | 50 | KEY | Key | | | Internal | |

| Module | J# | Pin# | Signal Name | Signal Description | Wire Size (AWG) | Wire Type | Signal Type | ICD Para. Reference |
|---|---|---|---|---|---|---|---|---|
| 2A4 | J4 | 1 | +18V.FW1 | Filter Wheel +18V #1 | 26 | TS(1,3) | Internal | |
| 2A4 | J4 | 2 | KEY | Key | | | Internal | |
| 2A4 | J4 | 3 | +18V.FW2 | Filter Wheel +18V #2 | 26 | TS(1,3) | Internal | |
| 2A4 | J4 | 4 | FW.PWR.GND | Filter Wheel Power Ground | 26 | TS(4,5) | Internal | |
| 2A4 | J4 | 5 | FW.PWR.GND | Filter Wheel Power Ground | 26 | TS(4,5) | Internal | |
| 2A4 | J4 | 6 | -3V.REF.TEMP1 | -3V Thermistor Ref #1 | 24 | Single | Internal | |
| 2A4 | J4 | 7 | -3V.REF.TEMP1 | -3V Thermistor Ref #1 | 24 | Single | Internal | |
| 2A4 | J4 | 8 | -3V.REF.TEMP2 | -3V Thermistor Ref #2 | 24 | Single | Internal | |
| 2A4 | J4 | 9 | -3V.REF.TEMP2 | -3V Thermistor Ref #2 | 24 | Single | Internal | |
| 2A4 | J4 | 10 | -3V.REF.TEMP3 | -3V Thermistor Ref #3 | 24 | Single | Internal | |
| 2A4 | J4 | 11 | -3V.REF.TEMP3 | -3V Thermistor Ref #3 | 24 | Single | Internal | |
| 2A4 | J4 | 12 | BCL(SIDE1) | Filter Wheel Scan Clock Instrument Side 1 | 26 | Single | Internal | |
| 2A4 | J4 | 13 | BCL(SIDE2) | Filter Wheel Scan Clock Instrument Side 2 | 26 | Single | Internal | |
| 2A4 | J4 | 14 | +10VA | +10V Instrument Side 1 | 26 | Single | Internal | |
| 2A4 | J4 | 15 | +10VB | +10V Instrument Side 2 | 26 | Single | Internal | |
| 2A4 | J4 | 16 | AZC.A* | Auto Zero Clamp Side 1 Active LOW | 26 | Single | Internal | |
| 2A4 | J4 | 17 | AZC.B* | Auto Zero Clamp Side 2 Active LOW | 26 | Single | Internal | |
| 2A4 | J4 | 18 | +6.2VA | +6.2V Instrument Side 1 | 26 | Single | Internal | |
| 2A4 | J4 | 19 | +6.2VB | +6.2V Instrument Side 2 | 26 | Single | Internal | |
| 2A4 | J4 | 20 | +6.2VAB.#1 | +6.2VAB #1 | 24 | Single | S/C, Visible & Star +6.2V | 3.5.5.3 |
| 2A4 | J4 | 21 | +6.2VAB.#2 | +6.2VAB #2 | 24 | Single | S/C, Visible & Star +6.2V | 3.5.5.3 |
| 2A4 | J4 | 22 | +6.2VAB.#3 | +6.2VAB #3 | 24 | Single | S/C, Visible & Star +6.2V | 3.5.5.3 |
| 2A4 | J4 | 23 | +6.2VAB.#4 | +6.2VAB #4 | 24 | Single | S/C, Visible & Star +6.2V | 3.5.5.3 |
| 2A4 | J4 | 24 | -6.2VAB.#1 | -6.2VAB #1 | 24 | Single | Internal | |
| 2A4 | J4 | 25 | -6.2VAB.#2 | -6.2VAB #2 | 24 | Single | Internal | |
| 2A4 | J4 | 26 | -6.2VAB.#3 | -6.2VAB #3 | 24 | Single | Internal | |
| 2A4 | J4 | 27 | -6.2VAB.#4 | -6.2VAB #4 | 24 | Single | Internal | |
| 2A4 | J4 | 28 | ELEC.CAL.#1 | Electronic Calibration #1 | 26 | Single | Internal | |
| 2A4 | J4 | 29 | ELEC.CAL.#2 | Electronic Calibration #2 | 26 | Single | Internal | |
| 2A4 | J4 | 30 | ELEC.CAL.#3 | Electronic Calibration #3 | 26 | Single | Internal | |
| 2A4 | J4 | 31 | ELEC.CAL.#4 | Electronic Calibration #4 | 26 | Single | Internal | |
| 2A4 | J4 | 32 | | Unused | | | Internal | |
| 2A4 | J4 | 33 | KEY | Key | | | Internal | |
| 2A4 | J4 | 34 | | Unused | | | Internal | |
| 2A4 | J4 | 35 | | Unused | | | Internal | |
| 2A4 | J4 | 36 | +6.2VTLM#1.CL | +6.2V Telemetry Current Limited #1 | 26 | Single | Internal | |
| 2A4 | J4 | 37 | +6.2VTLM#2.CL | +6.2V Telemetry Current Limited #2 | 26 | Single | Internal | |
| 2A4 | J4 | 38 | -6.2VTLM#1.CL | -6.2V Telemetry Current Limited #1 | 26 | Single | Internal | |
| 2A4 | J4 | 39 | -6.2VTLM#2.CL | -6.2V Telemetry Current Limited #2 | 26 | Single | Internal | |
| 2A4 | J4 | 40 | +15VTLM.A | +15V Telemetry Instrument Side 1 | 24 | Single | Internal | |
| 2A4 | J4 | 41 | +15VTLM.B | +15V Telemetry Instrument Side 2 | 24 | Single | Internal | |
| 2A4 | J4 | 42 | | Unused | | | Internal | |
| 2A4 | J4 | 43 | | Unused | | | Internal | |
| 2A4 | J4 | 44 | | Unused | | | Internal | |
| 2A4 | J4 | 45 | | Unused | | | Internal | |
| 2A4 | J4 | 46 | | Unused | | | Internal | |
| 2A4 | J4 | 47 | GROUND | Electronics Module Ground | 24 | Single | Internal | |
| 2A4 | J4 | 48 | GROUND | Electronics Module Ground | 24 | Single | Internal | |
| 2A4 | J4 | 49 | GROUND | Electronics Module Ground | 24 | Single | Internal | |
| 2A4 | J4 | 50 | GROUND | Electronics Module Ground | 24 | Single | Internal | |

| Module | J# | Pin# | Signal Name | Signal Description | Wire Size (AWG) | Wire Type | Signal Type | ICD Para. Reference |
|---|---|---|---|---|---|---|---|---|
| 2A4 | J5 | 1 | EW.X128C.IN.A | E-W X128 Cosine Side 1 | 26 | TS(1,18) | Internal | |
| 2A4 | J5 | 2 | EW.X1COS.IN.A | E-W X1 Cosine Side 1 | 26 | TS(2,19) | Internal | |
| 2A4 | J5 | 3 | EW.X128C.IN.B | E-W X128 Cosine Side 2 | 26 | TS(3,20) | Internal | |
| 2A4 | J5 | 4 | NS.X1COS.IN.A | N-S X1 Cosine Side 1 | 26 | TS(4,21) | Internal | |
| 2A4 | J5 | 5 | NS.X1COS.IN.B | N-S X1 Cosine Side 2 | 26 | TS(5,22) | Internal | |
| 2A4 | J5 | 6 | NS.X128C.IN.B | N-S X128 Cosine Side 2 | 26 | TS(6,23) | Internal | |
| 2A4 | J5 | 7 | RESERVED | Reserved | | | Internal | |
| 2A4 | J5 | 8 | +25V.MOT.A | +25V Scan Side 1 | 22 | T(8,9,10) | Internal | |
| 2A4 | J5 | 9 | 25V.MOT.RTN.A | 25V Scan Return Side 1 | 22 | T(8,9,10) | Internal | |
| 2A4 | J5 | 10 | -25V.MOT.A | -25V Scan Side 1 | 22 | T(8,9,10) | Internal | |
| 2A4 | J5 | 11 | +25V.MOT.B | +25V Scan Side 2 | 22 | T(11,12,13) | Internal | |
| 2A4 | J5 | 12 | 25V.MOT.RTN.B | 25V Scan Return Side 2 | 22 | T(11,12,13) | Internal | |
| 2A4 | J5 | 13 | -25V.MOT.B | -25V Scan Side 2 | 22 | T(11,12,13) | Internal | |
| 2A4 | J5 | 14 | CLR.PTCH.UT | Cooler Patch Under Temp | 26 | Single | Internal | |
| 2A4 | J5 | 15 | CLR.HSG.UT | Cooler Housing Under Temp | 26 | Single | Internal | |
| 2A4 | J5 | 16 | CLR.RAD.UT | Cooler Radiator Under Temp | 26 | Single | Internal | |
| 2A4 | J5 | 17 | PATCH.HTR | Patch Control Heater | 26 | Single | Internal | |
| 2A4 | J5 | 18 | EW.X128C.RTN.A | E-W X128 Cosine Return Side 1 | 26 | TS(1,18) | Internal | |
| 2A4 | J5 | 19 | EW.X1COS.RTN.A | E-W X1 Cosine Return Side 1 | 26 | TS(2,19) | Internal | |
| 2A4 | J5 | 20 | EW.X128C.RTN.B | E-W X128 Cosine Return Side 2 | 26 | TS(3,20) | Internal | |
| 2A4 | J5 | 21 | NS.X1COS.RTN.A | N-S X1 Cosine Return Side 1 | 26 | TS(4,21) | Internal | |
| 2A4 | J5 | 22 | NS.X1COS.RTN.B | N-S X1 Cosine Return Side 2 | 26 | TS(5,22) | Internal | |
| 2A4 | J5 | 23 | NS.X128C.RTN.B | N-S X128 Cosine Return Side 2 | 26 | TS(6,23) | Internal | |
| 2A4 | J5 | 24 | RESERVED | Reserved | | | Internal | |
| 2A4 | J5 | 25 | RETRO.DELAY.A | Retrotorque Delay Side 1 | 26 | Single | Internal | |
| 2A4 | J5 | 26 | RETRO.DELAY.B | Retrotorque Delay Side 2 | 26 | Single | Internal | |
| 2A4 | J5 | 27 | AGBEW.A | AGB EAST-WEST Side 1 | 26 | Single | Internal | |
| 2A4 | J5 | 28 | AGBEW.B | AGB EAST-WEST Side 2 | 26 | Single | Internal | |
| 2A4 | J5 | 29 | | Unused | | | Internal | |
| 2A4 | J5 | 30 | | Unused | | | Internal | |
| 2A4 | J5 | 31 | GROUND | Electronics Module Ground | 24 | Single | Internal | |
| 2A4 | J5 | 32 | | Unused | | | Internal | |
| 2A4 | J5 | 33 | KEY | Key | | | Internal | |
| 2A4 | J5 | 34 | KEY | Key | | | Internal | |
| 2A4 | J5 | 35 | EW.X1COS.IN.B | E-W X1 Cosine Side 2 | 26 | TS(35,36) | Internal | |
| 2A4 | J5 | 36 | EW.X1COS.RTN.B | E-W X1 Cosine Return Side 2 | 26 | TS(35,36) | Internal | |
| 2A4 | J5 | 37 | NS.X128C.IN.A | N-S X128 Cosine Side 1 | 26 | TS(37,38) | Internal | |
| 2A4 | J5 | 38 | NS.X128C.RTN.A | N-S X128 Cosine Return Side 1 | 26 | TS(37,38) | Internal | |
| 2A4 | J5 | 39 | RESERVED | Reserved | | | Internal | |
| 2A4 | J5 | 40 | RESERVED | Reserved | | | Internal | |
| 2A4 | J5 | 41 | X.ADD.CLK.A | X Address Clock Side 1 | 26 | Single | Internal | |
| 2A4 | J5 | 42 | X.ADD.CLK.B | X Address Clock Side 2 | 26 | Single | Internal | |
| 2A4 | J5 | 43 | EW.MITEST.A | E-W Motor Current Test Side 1 | 26 | T(43,44) | Internal | |
| 2A4 | J5 | 44 | EW.MITEST.RN.A | E-W Motor Current Test Return Side 1 | 26 | T(43,44) | Internal | |
| 2A4 | J5 | 45 | EW.MITEST.B | E-W Motor Current Test Side 2 | 26 | T(45,46) | Internal | |
| 2A4 | J5 | 46 | EW.MITEST.RN.B | E-W Motor Current Test Return Side 2 | 26 | T(45,46) | Internal | |
| 2A4 | J5 | 47 | NS.MITEST.A | N-S Motor Current Test Side 1 | 26 | T(47,48) | Internal | |
| 2A4 | J5 | 48 | NS.MITEST.RN.A | N-S Motor Current Test Return Side 1 | 26 | T(47,48) | Internal | |
| 2A4 | J5 | 49 | NS.MITEST.B | N-S Motor Current Test Side 2 | 26 | T(49,50) | Internal | |
| 2A4 | J5 | 50 | NS.MITEST.RN.B | N-S Motor Current Test Return Side 2 | 26 | T(49,50) | Internal | |

| Module | J# | Pin# | Signal Name | Signal Description | Wire Size (AWG) | Wire Type | Signal Type | ICD Para. Reference |
|---|---|---|---|---|---|---|---|---|
| 2A4 | J6 | 1 | RESERVED | Reserved | | | Internal | |
| 2A4 | J6 | 2 | KEY | Key | | | Internal | |
| 2A4 | J6 | 3 | LW1 VIDEO + | Longwave Video + Channel 1 | 26 | TS(3,4) | Internal | |
| 2A4 | J6 | 4 | LW1.VIDEO.- | Longwave Video - Channel 1 | 26 | TS(3,4) | Internal | |
| 2A4 | J6 | 5 | LW4.VIDEO.+ | Longwave Video + Channel 4 | 26 | TS(5,6) | Internal | |
| 2A4 | J6 | 6 | LW4.VIDEO.- | Longwave Video - Channel 4 | 26 | TS(5,6) | Internal | |
| 2A4 | J6 | 7 | MW3.VIDEO.+ | Midwave Video + Channel 3 | 26 | TS(7,8) | Internal | |
| 2A4 | J6 | 8 | MW3.VIDEO.- | Midwave Video - Channel 3 | 26 | TS(7,8) | Internal | |
| 2A4 | J6 | 9 | SW2.VIDEO.+ | Shortwave Video + Channel 2 | 26 | TS(9,10) | Internal | |
| 2A4 | J6 | 10 | SW2.VIDEO.- | Shortwave Video - Channel 2 | 26 | TS(9,10) | Internal | |
| 2A4 | J6 | 11 | SHIELD3 | Shield 3 | 26 | SSC(11,12)(11,13) | Internal | |
| 2A4 | J6 | 12 | STAR3.VIDEO | Star Sense Video Channel 3 | 26 | SSC(11,12) | Internal | |
| 2A4 | J6 | 13 | STAR6.VIDEO | Star Sense Video Channel 6 | 26 | SSC(11,13) | Internal | |
| 2A4 | J6 | 14 | VIS1.VIDEO | Visible Video Channel 1 | 26 | SSC(14,16) | Internal | |
| 2A4 | J6 | 15 | VIS4.VIDEO | Visible Video Channel 4 | 26 | SSC(15,16) | Internal | |
| 2A4 | J6 | 16 | SHIELD4 | Shield 4 | 26 | SSC(14,16)(15,16) | Internal | |
| 2A4 | J6 | 17 | FW.HTR.A.V | Filter Wheel Control Heater Voltage #1 | 26 | Single | Internal | |
| 2A4 | J6 | 18 | RESERVED | Reserved | | | Internal | |
| 2A4 | J6 | 19 | LW2.VIDEO.- | Longwave Video - Channel 2 | 26 | TS(19,20) | Internal | |
| 2A4 | J6 | 20 | LW2.VIDEO.+ | Longwave Video + Channel 2 | 26 | TS(19,20) | Internal | |
| 2A4 | J6 | 21 | MW1.VIDEO.- | Midwave Video - Channel 1 | 26 | TS(21,22) | Internal | |
| 2A4 | J6 | 22 | MW1.VIDEO.+ | Midwave Video + Channel 1 | 26 | TS(21,22) | Internal | |
| 2A4 | J6 | 23 | MW4.VIDEO.- | Midwave Video - Channel 4 | 26 | TS(23,24) | Internal | |
| 2A4 | J6 | 24 | MW4.VIDEO.+ | Midwave Video + Channel 4 | 26 | TS(23,24) | Internal | |
| 2A4 | J6 | 25 | SW3.VIDEO.- | Shortwave Video - Channel 3 | 26 | TS(25,26) | Internal | |
| 2A4 | J6 | 26 | SW3.VIDEO.+ | Shortwave Video + Channel 3 | 26 | TS(25,26) | Internal | |
| 2A4 | J6 | 27 | SHIELD1 | Shield 1 | 26 | SSC(27,28)(27,29) | Internal | |
| 2A4 | J6 | 28 | STAR1.VIDEO | Star Sense Video Channel 1 | 26 | SSC(27,28) | Internal | |
| 2A4 | J6 | 29 | STAR4.VIDEO | Star Sense Video Channel 4 | 26 | SSC(27,29) | Internal | |
| 2A4 | J6 | 30 | STAR7.VIDEO | Star Sense Video Channel 7 | 26 | SSC(30,32) | Internal | |
| 2A4 | J6 | 31 | VIS2.VIDEO | Visible Video Channel 2 | 26 | SSC(31,32) | Internal | |
| 2A4 | J6 | 32 | SHIELD6 | Shield 6 | 26 | SSC(30,32)(31,32) | Internal | |
| 2A4 | J6 | 33 | FW.HTR.B.V | Filter Wheel Control Heater Voltage #2 | 26 | Single | Internal | |
| 2A4 | J6 | 34 | RESERVED | Reserved | | | Internal | |
| 2A4 | J6 | 35 | LW3.VIDEO.+ | Longwave Video + Channel 3 | 26 | TS(35,36) | Internal | |
| 2A4 | J6 | 36 | LW3.VIDEO.- | Longwave Video - Channel 3 | 26 | TS(35,36) | Internal | |
| 2A4 | J6 | 37 | MW2.VIDEO.+ | Midwave Video + Channel 2 | 26 | TS(37,38) | Internal | |
| 2A4 | J6 | 38 | MW2.VIDEO.- | Midwave Video - Channel 2 | 26 | TS(37,38) | Internal | |
| 2A4 | J6 | 39 | SW1.VIDEO.+ | Shortwave Video + Channel 1 | 26 | TS(39,40) | Internal | |
| 2A4 | J6 | 40 | SW1.VIDEO.- | Shortwave Video - Channel 1 | 26 | TS(39,40) | Internal | |
| 2A4 | J6 | 41 | SW4.VIDEO.+ | Shortwave Video + Channel 4 | 26 | TS(41,42) | Internal | |
| 2A4 | J6 | 42 | SW4.VIDEO.- | Shortwave Video - Channel 4 | 26 | TS(41,42) | Internal | |
| 2A4 | J6 | 43 | SHIELD2 | Shield 2 | 26 | SSC(43,44)(43,45) | Internal | |
| 2A4 | J6 | 44 | STAR2.VIDEO | Star Sense Video Channel 2 | 26 | SSC(43,44) | Internal | |
| 2A4 | J6 | 45 | STAR5.VIDEO | Star Sense Video Channel 5 | 26 | SSC(43,45) | Internal | |
| 2A4 | J6 | 46 | STAR8.VIDEO | Star Sense Video Channel 8 | 26 | SSC(46,48) | Internal | |
| 2A4 | J6 | 47 | VIS3.VIDEO | Visible Video Channel 3 | 26 | SSC(47,48) | Internal | |
| 2A4 | J6 | 48 | SHIELD5 | Shield 5 | 26 | SSC(46,48)(47,48) | Internal | |
| 2A4 | J6 | 49 | KEY | Key | | | Internal | |
| 2A4 | J6 | 50 | FWOG1.SC.BAR | Filter Wheel Outgas ON/OFF Status | 26 | Single | Internal | |

| Module | J# | Pin# | Signal Name | Signal Description | Wire Size (AWG) | Wire Type | Signal Type | ICD Para. Reference |
|---|---|---|---|---|---|---|---|---|
| 2A4 | J7 | 1 | EW.X128S.IN.A | E-W X128 Sine Side 1 | 26 | TS(1,18) | Internal | |
| 2A4 | J7 | 2 | EW.X1SIN.IN.A | E-W X1 Sine Side 1 | 26 | TS(2,19) | Internal | |
| 2A4 | J7 | 3 | EW.X128S.IN.B | E-W X128 Sine Side 2 | 26 | TS(3,20) | Internal | |
| 2A4 | J7 | 4 | NS.X1SIN.IN.A | N-S X1 Sine Side 1 | 26 | TS(4,21) | Internal | |
| 2A4 | J7 | 5 | NS.X1SIN.IN.B | N-S X1 Sine Side 2 | 26 | TS(5,22) | Internal | |
| 2A4 | J7 | 6 | NS.X128S.IN.B | N-S X128 Sine Side 2 | 26 | TS(6,23) | Internal | |
| 2A4 | J7 | 7 | RESERVED | Reserved | | | Internal | |
| 2A4 | J7 | 8 | -9V.SCAN.A | -9V Scan Side 1 | 24 | T(8,9,10) | Internal | |
| 2A4 | J7 | 9 | 9V.SCAN.RTN.A | 9V Scan Return Side 1 | 24 | T(8,9,10) | Internal | |
| 2A4 | J7 | 10 | +9V.SCAN.A | +9V Scan Side 1 | 24 | T(8,9,10) | Internal | |
| 2A4 | J7 | 11 | GROUND | Electronics Module Ground | 24 | Single | Internal | |
| 2A4 | J7 | 12 | NSQ.SCNDR.B | N-S Quad Scan Drive Side 2 | 26 | TS(12,13) | Internal | |
| 2A4 | J7 | 13 | NSQ.SCNDR.RN.B | N-S Quad Scan Drive Return Side 2 | 26 | TS(12,13) | Internal | |
| 2A4 | J7 | 14 | GROUND | Electronics Module Ground | 24 | Single | Internal | |
| 2A4 | J7 | 15 | EW.SCNDR.RN.A | E-W Scan Drive Return Side 1 | 26 | TS(15,16) | Internal | |
| 2A4 | J7 | 16 | EW.SCNDR.A | E-W Scan Drive Side 1 | 26 | TS(15,16) | Internal | |
| 2A4 | J7 | 17 | KEY | Key | | | Internal | |
| 2A4 | J7 | 18 | EW.X128S.RTN.A | E-W X128 Sine Return Side 1 | 26 | TS(1,18) | Internal | |
| 2A4 | J7 | 19 | EW.X1SIN.RTN.A | E-W X1 Sine Return Side 1 | 26 | TS(2,19) | Internal | |
| 2A4 | J7 | 20 | EW.X128S.RTN.B | E-W X128 Sine Return Side 2 | 26 | TS(3,20) | Internal | |
| 2A4 | J7 | 21 | NS.X1SIN.RTN.A | N-S X1 Sine Return Side 1 | 26 | TS(4,21) | Internal | |
| 2A4 | J7 | 22 | NS.X1SIN.RTN.B | N-S X1 Sine Return Side 2 | 26 | TS(5,22) | Internal | |
| 2A4 | J7 | 23 | NS.X128S.RTN.B | N-S X128 Sine Return Side 2 | 26 | TS(6,23) | Internal | |
| 2A4 | J7 | 24 | RESERVED | Reserved | | | Internal | |
| 2A4 | J7 | 25 | -9V.SCAN.B | -9V Scan Side 2 | 24 | T(25,26,27) | Internal | |
| 2A4 | J7 | 26 | 9V.SCAN.RTN.B | 9V Scan Return Side 2 | 24 | T(25,26,27) | Internal | |
| 2A4 | J7 | 27 | +9V.SCAN.B | +9V Scan Side 2 | 24 | T(25,26,27) | Internal | |
| 2A4 | J7 | 28 | GROUND | Electronics Module Ground | 24 | Single | Internal | |
| 2A4 | J7 | 29 | NST.SCNDR.A | N-S True Scan Drive Side 1 | 26 | TS(29,30) | Internal | |
| 2A4 | J7 | 30 | NST.SCNDR.RN.A | N-S True Scan Drive Return Side 1 | 26 | TS(29,30) | Internal | |
| 2A4 | J7 | 31 | GROUND | Electronics Module Ground | 24 | Single | Internal | |
| 2A4 | J7 | 32 | EW.SCNDR.RN.B | E-W Scan Drive Return Side 2 | 26 | TS(32,33) | Internal | |
| 2A4 | J7 | 33 | EW.SCNDR.B | E-W Scan Drive Side 2 | 26 | TS(32,33) | Internal | |
| 2A4 | J7 | 34 | KEY | Key | | | Internal | |
| 2A4 | J7 | 35 | EW.X1SIN.IN.B | E-W X1 Sine Side 2 | 26 | TS(35,36) | Internal | |
| 2A4 | J7 | 36 | EW.X1SIN.RTN.B | E-W X1 Sine Return Side 2 | 26 | TS(35,36) | Internal | |
| 2A4 | J7 | 37 | NS.X128S.IN.A | N-S X128 Sine Side 1 | 26 | TS(37,38) | Internal | |
| 2A4 | J7 | 38 | NS.X128S.RTN.A | N-S X128 Sine Return Side 1 | 26 | TS(37,38) | Internal | |
| 2A4 | J7 | 39 | RESERVED | Reserved | | | Internal | |
| 2A4 | J7 | 40 | RESERVED | Reserved | | | Internal | |
| 2A4 | J7 | 41 | +10V.SCAN.A | +10V Scan Side 1 | 26 | T(41,44) | Internal | |
| 2A4 | J7 | 42 | +10V.SCAN.B | +10V Scan Side 2 | 26 | T(42,45) | Internal | |
| 2A4 | J7 | 43 | GROUND | Electronics Module Ground | 24 | Single | Internal | |
| 2A4 | J7 | 44 | 10V.SCAN.RTN.A | 10V Scan Return Side 1 | 26 | T(41,44) | Internal | |
| 2A4 | J7 | 45 | 10V.SCAN.RTN.B | 10V Scan Return Side 2 | 26 | T(42,45) | Internal | |
| 2A4 | J7 | 46 | NST.SCNDR.B | N-S True Scan Drive Side 2 | 26 | TS(46,47) | Internal | |
| 2A4 | J7 | 47 | NST.SCNDR.RN.B | N-S True Scan Drive Return Side 2 | 26 | TS(46,47) | Internal | |
| 2A4 | J7 | 48 | GROUND | Electronics Module Ground | 24 | Single | Internal | |
| 2A4 | J7 | 49 | NSQ.SCNDR.RN.A | N-S Quad Scan Drive Return Side 1 | 26 | TS(49,50) | Internal | |
| 2A4 | J7 | 50 | NSQ.SCNDR.A | N-S Quad Scan Drive Side 1 | 26 | TS(49,50) | Internal | |

| Module | J# | Pin# | Signal Name | Signal Description | Wire Size (AWG) | Wire Type | Signal Type | ICD Para. Reference |
|---|---|---|---|---|---|---|---|---|
| 2A4 | J8 | 1 | LV.HTR.OB10.A | Louver Heater Outboard 10 Watt Side 1 | 24 | Single | S/C, Louver Test (Heater) | 3.4.1.4 |
| 2A4 | J8 | 2 | LV.HTR.IB20.A | Louver Heater Inboard 20 Watt Side 1 | 24 | Single | S/C, Louver Test (Heater) | 3.4.1.4 |
| 2A4 | J8 | 3 | LV.HTR.IB10.B | Louver Heater Inboard 10 Watt Side 2 | 24 | Single | S/C, Louver Test (Heater) | 3.4.1.4 |
| 2A4 | J8 | 4 | KEY | Key | | | S/C | |
| 2A4 | J8 | 5 | FWCNT.CU1.OFF | Filter Housing Thermal Control Cmd Unit 1 | 26 | Single | S/C | |
| 2A4 | J8 | 6 | LV.HTR.OBRTN.A | Louver Heater Outboard Return Side 1 | 24 | Single | S/C, Louver Test (Heater) | 3.4.1.4 |
| 2A4 | J8 | 7 | LV.HTR.IBRTN.A | Louver Heater Inboard Return Side 1 | 24 | Single | S/C, Louver Test (Heater) | 3.4.1.4 |
| 2A4 | J8 | 8 | LV.HTR.OBRTN.B | Louver Heater Outboard Return Side 2 | 24 | Single | S/C, Louver Test (Heater) | 3.4.1.4 |
| 2A4 | J8 | 9 | LV.HTR.IBRTN.B | Louver Heater Inboard Return Side 2 | 24 | Single | S/C, Louver Test (Heater) | 3.4.1.4 |
| 2A4 | J8 | 10 | CMD.RELAY.RTN | Cmd Unit 1 Return | 24 | Single | S/C, Pulse Command | 3.5.1.2 |
| 2A4 | J8 | 11 | CMD.RELAY.RTN | Cmd Unit 2 Return | 24 | Single | S/C, Pulse Command | 3.5.1.2 |
| 2A4 | J8 | 12 | RCOG.CU1.HIGH | Cooler Outgas Heat HIGH Select Cmd Unit 1 | 26 | Single | S/C, Pulse Command | 3.5.1.2 |
| 2A4 | J8 | 13 | RCOG.CU1.ON.LO | Cooler Outgas Heat ON/LOW Cmd Unit 1 | 26 | Single | S/C, Pulse Command | 3.5.1.2 |
| 2A4 | J8 | 14 | RCOG.CU1.OFF | Cooler Outgas Heat OFF Cmd Unit 1 | 26 | Single | S/C, Pulse Command | 3.5.1.2 |
| 2A4 | J8 | 15 | RCOG.CU2.HIGH | Cooler Outgas Heat HIGH Select Cmd Unit 2 | 26 | Single | S/C, Pulse Command | 3.5.1.2 |
| 2A4 | J8 | 16 | RCOG.CU2.ON.LO | Cooler Outgas Heat ON/LOW Cmd Unit 2 | 26 | Single | S/C, Pulse Command | 3.5.1.2 |
| 2A4 | J8 | 17 | RCOG.CU2.OFF | Cooler Outgas Heat OFF Cmd Unit 2 | 26 | Single | S/C, Pulse Command | 3.5.1.2 |
| 2A4 | J8 | 18 | LV.HTR.OB20.A | Louver Heater Outboard 20 Watt Side 1 | 24 | Single | S/C, Louver Test (Heater) | 3.4.1.4 |
| 2A4 | J8 | 19 | LV.HTR.OB10.B | Louver Heater Outboard 10 Watt Side 2 | 24 | Single | S/C, Louver Test (Heater) | 3.4.1.4 |
| 2A4 | J8 | 20 | RESERVED | Reserved | | | S/C | |
| 2A4 | J8 | 21 | FWCNT.CU2.OFF | Filter Housing Therm Control OFF Cmd Unit 2 | 26 | Single | S/C, Pulse Command | 3.5.1.2 |
| 2A4 | J8 | 22 | BSP1.CU1.ON.LO | Thermal Control No 1 ON LOW Cmd Unit1 | 26 | Single | S/C, Pulse Command | 3.5.1.2 |
| 2A4 | J8 | 23 | BSP1.CU2.ON.LO | Thermal Control No 1 ON LOW Cmd Unit2 | 26 | Single | S/C, Pulse Command | 3.5.1.2 |
| 2A4 | J8 | 24 | BSP2.CU1.ON.LO | Thermal Control No 2 ON LOW Cmd Unit1 | 26 | Single | S/C, Pulse Command | 3.5.1.2 |
| 2A4 | J8 | 25 | BSP2.CU2.ON.LO | Thermal Control No 2 ON LOW Cmd Unit2 | 26 | Single | S/C, Pulse Command | 3.5.1.2 |
| 2A4 | J8 | 26 | BSP.CU1.HIGH | Thermal Control Heaters HIGH Cmd Unit 1 | 26 | Single | S/C, Pulse Command | 3.5.1.2 |
| 2A4 | J8 | 27 | BSP.CU2.HIGH | Thermal Control Heaters HIGH Cmd Unit 2 | 26 | Single | S/C, Pulse Command | 3.5.1.2 |
| 2A4 | J8 | 28 | BSP.CU1.OFF | Thermal Control Heaters OFF Cmd Unit 1 | 26 | Single | S/C, Pulse Command | 3.5.1.2 |
| 2A4 | J8 | 29 | BSP.CU2.OFF | Thermal Control Heaters OFF Cmd Unit 2 | 26 | Single | S/C, Pulse Command | 3.5.1.2 |
| 2A4 | J8 | 30 | FWCNT.CU1.ON | Filter Housing Thermal Control ON Cmd Unit 1 | 26 | Single | S/C, Pulse Command | 3.5.1.2 |
| 2A4 | J8 | 31 | FWCNT.CU2.ON | Filter Housing Thermal Control ON Cmd Unit 2 | 26 | Single | S/C, Pulse Command | 3.5.1.2 |
| 2A4 | J8 | 32 | FWOG.CU1.OFF | Filter Cooler Outgas OFF Cmd Unit 1 | 26 | Single | S/C, Pulse Command | 3.5.1.2 |
| 2A4 | J8 | 33 | FWOG.CU2.OFF | Filter Cooler Outgas OFF Cmd Unit 2 | 26 | Single | S/C, Pulse Command | 3.5.1.2 |
| 2A4 | J8 | 34 | LV.HTR.IB20.B | Louver Heater Inboard 20 Watt Side 2 | 24 | Single | S/C, Louver Test (Heater) | 3.4.1.4 |
| 2A4 | J8 | 35 | LV.HTR.IB10.A | Louver Heater Inboard 10 Watt Side 1 | 24 | Single | S/C, Louver Test (Heater) | 3.4.1.4 |
| 2A4 | J8 | 36 | LV.HTR.OB20.B | Louver Heater Outboard 20 Watt Side 2 | 24 | Single | S/C, Louver Test (Heater) | 3.4.1.4 |
| 2A4 | J8 | 37 | KEY | Key | | | S/C | |
| 2A4 | J8 | 38 | FWOG.CU1.ON | Filter Cooler Outgas ON Cmd Unit 1 | 26 | Single | S/C, Pulse Command | 3.5.1.2 |
| 2A4 | J8 | 39 | FWOG.CU2.ON | Filter Cooler Outgas ON Cmd Unit 2 | 26 | Single | S/C, Pulse Command | 3.5.1.2 |
| 2A4 | J8 | 40 | FWCNT.SC | Filter Wheel Control ON/OFF Status | 26 | Single | S/C, Relay Bi-Level Telemetry | 3.5.2.1 |
| 2A4 | J8 | 41 | FWOG1.SC | Filter Wheel Outgas ON/OFF Status | 26 | Single | S/C, Relay Bi-Level Telemetry | 3.5.2.1 |
| 2A4 | J8 | 42 | BSP1.ON.SC | Thermal Control No 1 ON/OFF Status | 26 | Single | S/C, Relay Bi-Level Telemetry | 3.5.2.1 |
| 2A4 | J8 | 43 | BSP2.ON.SC | Thermal Control No 2 ON/OFF Status | 26 | Single | S/C, Relay Bi-Level Telemetry | 3.5.2.1 |
| 2A4 | J8 | 44 | BSP2.LO.SC.BAR | Thermal Control HIGH/LOW Select Status | 26 | Single | S/C, Relay Bi-Level Telemetry | 3.5.2.1 |
| 2A4 | J8 | 45 | RCOG.ON.SC | Cooler Outgas ON/OFF Status | 26 | Single | S/C, Relay Bi-Level Telemetry | 3.5.2.1 |
| 2A4 | J8 | 46 | RCOG.LO.SC.BAR | Cooler Outgas HIGH/LOW Select Status | 26 | Single | S/C, Relay Bi-Level Telemetry | 3.5.2.1 |
| 2A4 | J8 | 47 | | Unused | | | S/C | |
| 2A4 | J8 | 48 | | Unused | | | S/C | |
| 2A4 | J8 | 49 | TLM.RTN | Bi-Level Telemetry Return | 24 | Single | S/C, Relay Bi-Level Telemetry | 3.5.2.1 |
| 2A4 | J8 | 50 | TLM.RTN | Bi-Level Telemetry Return | 24 | Single | S/C, Relay Bi-Level Telemetry | 3.5.2.1 |

| Module | J# | Pin# | Signal Name | Signal Description | Wire Size (AWG) | Wire Type | Signal Type | ICD Para. Reference |
|---|---|---|---|---|---|---|---|---|
| 2A4 | J10 | 1 | | Unused | | | Internal | |
| 2A4 | J10 | 2 | HSG.HTR2.RTN | Housing Heater 2 Return | 26 | Single | Internal | 3.4.1.4 |
| 2A4 | J10 | 3 | HSG.HTR1.RTN | Housing Heater 1 Return | 26 | Single | Internal | 3.4.1.4 |
| 2A4 | J10 | 4 | HSG.HTR1.RTN | Housing Heater 1 Return | 26 | Single | Internal | 3.4.1.4 |
| 2A4 | J10 | 5 | HSG.HTR2.RTN | Housing Heater 2 Return | 26 | Single | Internal | 3.4.1.4 |
| 2A4 | J10 | 6 | RAD.HTRS.RTN | Radiator Heaters Return | 26 | Single | S/C, Anti-Contamination | 3.5.5.1 |
| 2A4 | J10 | 7 | RAD.HTRS.RTN | Radiator Heaters Return | 26 | Single | S/C, Anti-Contamination | 3.5.5.1 |
| 2A4 | J10 | 8 | PATCH.HTRS.RTN | Patch Heaters Return | 26 | Single | Internal | 3.4.1.4 |
| 2A4 | J10 | 9 | PATCH.HTRS.RTN | Patch Heaters Return | 26 | Single | Internal | 3.4.1.4 |
| 2A4 | J10 | 10 | RCOG.HTR.HIGH | Cooler Outgas Heater HIGH Voltage (+43 V) | 26 | Single | S/C, Anti-Contamination | 3.5.5.1 |
| 2A4 | J10 | 11 | VAC.HSG.GND | Vacuum Housing Chassis Ground | 24 | Single | Internal | 3.4.1.4 |
| 2A4 | J10 | 12 | PATCH.GND | Patch Chassis Ground | 24 | Single | Internal | 3.4.1.4 |
| 2A4 | J10 | 13 | GROUND | Electronics Module Ground | 24 | Single | Internal | 3.4.1.4 |
| 2A4 | J10 | 14 | | Unused | | | Internal | |
| 2A4 | J10 | 15 | | Unused | | | Internal | |
| 2A4 | J10 | 16 | | Unused | | | Internal | |
| 2A4 | J10 | 17 | | Unused | | | Internal | |
| 2A4 | J10 | 18 | | Unused | | | Internal | |
| 2A4 | J10 | 19 | HSG.HTR2.RTN | Housing Heater 2 Return | 26 | Single | Internal | 3.4.1.4 |
| 2A4 | J10 | 20 | HSG.HTR1.RTN | Housing Heater 1 Return | 26 | Single | Internal | 3.4.1.4 |
| 2A4 | J10 | 21 | HSG.HTR1.RTN | Housing Heater 1 Return | 26 | Single | Internal | 3.4.1.4 |
| 2A4 | J10 | 22 | HSG.HTR2.RTN | Housing Heater 2 Return | 26 | Single | Internal | 3.4.1.4 |
| 2A4 | J10 | 23 | RAD.HTRS.RTN | Radiator Heaters Return | 26 | Single | S/C, Anti-Contamination | 3.5.5.1 |
| 2A4 | J10 | 24 | RAD.HTRS.RTN | Radiator Heaters Return | 26 | Single | S/C, Anti-Contamination | 3.5.5.1 |
| 2A4 | J10 | 25 | PATCH.HTRS.RTN | Patch Heaters Return | 26 | Single | Internal | 3.4.1.4 |
| 2A4 | J10 | 26 | PATCH.HTRS.RTN | Patch Heaters Return | 26 | Single | Internal | 3.4.1.4 |
| 2A4 | J10 | 27 | RCOG.HTR.HIGH | Cooler Outgas HIGH Voltage (+43 V) | 26 | Single | S/C, Anti-Contamination | 3.5.5.1 |
| 2A4 | J10 | 28 | RAD.GND | Radiator Chassis Ground | 24 | Single | Internal | 3.4.1.4 |
| 2A4 | J10 | 29 | PATCH.GND | Patch Chassis Ground | 24 | Single | Internal | 3.4.1.4 |
| 2A4 | J10 | 30 | | Unused | | | Internal | |
| 2A4 | J10 | 31 | | Unused | | | Internal | |
| 2A4 | J10 | 32 | | Unused | | | Internal | |
| 2A4 | J10 | 33 | | Unused | | | Internal | |
| 2A4 | J10 | 34 | | Unused | | | Internal | |
| 2A4 | J10 | 35 | HSG.HTR2.RTN | Housing Heater 2 Return | 26 | Single | Internal | 3.4.1.4 |
| 2A4 | J10 | 36 | | Unused | | | Internal | |
| 2A4 | J10 | 37 | HSG.HTR1.RTN | Housing Heater 1 Return | 26 | Single | Internal | 3.4.1.4 |
| 2A4 | J10 | 38 | | Unused | | | Internal | |
| 2A4 | J10 | 39 | | Unused | | | Internal | |
| 2A4 | J10 | 40 | | Unused | | | Internal | |
| 2A4 | J10 | 41 | | Unused | | | Internal | |
| 2A4 | J10 | 42 | | Unused | | | Internal | |
| 2A4 | J10 | 43 | VAC.HSG.GND | Vacuum Housing Chassis Ground | 24 | Single | Internal | 3.4.1.4 |
| 2A4 | J10 | 44 | RAD.GND | Radiator Chassis Ground | 24 | Single | Internal | 3.4.1.4 |
| 2A4 | J10 | 45 | GROUND | Electronics Ground Module | 24 | Single | Internal | 3.4.1.4 |
| 2A4 | J10 | 46 | | Unused | | | Internal | |
| 2A4 | J10 | 47 | | Unused | | | Internal | |
| 2A4 | J10 | 48 | | Unused | | | Internal | |
| 2A4 | J10 | 49 | | Unused | | | Internal | |
| 2A4 | J10 | 50 | | Unused | | | Internal | |

| Module | J# | Pin# | Signal Name | Signal Description | Wire Size (AWG) | Wire Type | Signal Type | ICD Para. Reference |
|---|---|---|---|---|---|---|---|---|
| 2A4 | J11 | 1 | BSP1.FUSE.BUS | Fused Bus Power for BP Htrs No.1 (VBPHA1) | 22 | Single | Internal | |
| 2A4 | J11 | 2 | BSP2.FUSE.BUS | Fused Bus Power for BP Htrs No.2 (VBPHB1) | 22 | Single | Internal | |
| 2A4 | J11 | 3 | RCOG.FUSED.BUS | Bus Power for Cooler Outgas Heater (VDRO1) | 20 | Single | Internal | |
| 2A4 | J11 | 4 | FWOG1.FUSE.BUS | Bus Power for Filter Wheel Outgas (VDFO1) | 20 | Single | Internal | |
| 2A4 | J11 | 5 | SCAN.FUSE.BUS | Fused Power for Select Relay Buffer (VBF.SR) | 24 | Single | Internal | |
| 2A4 | J11 | 6 | *PWR.GND* | *Instrument Power Common (COM4)* | *20* | *Single* | Internal | |
| 2A4 | J11 | 7 | CU1.S2.SEL | Cmd Unit 1 Select Side 2 (C1.SELEB) | 26 | Single | Internal | |
| 2A4 | J11 | 8 | CU2.S2.SEL | Cmd Unit 2 Select Side 2 (C2.SELEB) | 26 | Single | Internal | |
| 2A4 | J11 | 9 | SCAN.PWR.ON.A | Scan Power ON Side 1 (T.SON) | 26 | Single | Internal | |
| 2A4 | J11 | 10 | MOL.PS.A | Scan Side 1 Shutdown (Motor Overload)(SON.A) | 26 | T(10,11) | Internal, &S/C Motor Overload Disable | 3.5.5.2 |
| 2A4 | J11 | 11 | MOL.PS.RTN | Scan Shutdown Return (COM3) | 26 | T(10,11)(11,23) | Internal | |
| 2A4 | J11 | 12 | PWR.GND | Power Supply Return To Sensor Module (COM1) | 20 | Single | Internal, &S/C Anti-Contamination | 3.5.5.1 |
| 2A4 | J11 | 13 | -8V.NI.TLM.B | -8V for Baseplate Heaters Side 2(VA8MB) | 22 | Single | Internal | |
| 2A4 | J11 | 14 | BSP1.FUSE.BUS | Fused Bus Power for BP Htrs No.1 (VBPHA2) | 22 | Single | Internal | |
| 2A4 | J11 | 15 | BSP2.FUSE.BUS | Fused Bus Power for BP Htrs No.2 (VBPHB2) | 22 | Single | Internal | |
| 2A4 | J11 | 16 | RCOG.FUSED.BUS | Bus Power for Cooler Outgas Heater (VDRO2) | 20 | Single | Internal | |
| 2A4 | J11 | 17 | FWOG2.FUSE.BUS | Bus Power for Filter Wheel Outgas (VDFO2) | 22 | Single | Internal | |
| 2A4 | J11 | 18 | RESERVED | Reserved | | | Internal | |
| 2A4 | J11 | 19 | CU1.S1.SEL | Cmd Unit 1 Select Side 1 (C1.SELA) | 26 | Single | Internal | |
| 2A4 | J11 | 20 | CU2.S1.SEL | Cmd Unit 2 Select Side 1 (C2.SELA) | 26 | Single | Internal | |
| 2A4 | J11 | 21 | SCAN.PWR.ON.B | Scan Power ON Side 2 (T.SON) | 26 | Single | Internal | |
| 2A4 | J11 | 22 | S1S2.SEL.RTN | Side Select Enable (SEL.EN) | 26 | Single | Internal | |
| 2A4 | J11 | 23 | MOL.PS.B | Scan Side 2 Shutdown (Motor Overload)(SON.B) | 26 | T(11,23) | Internal, &S/C Motor Overload Disable | 3.5.5.2 |
| 2A4 | J11 | 24 | PWR.GND | Power Supply Return To Sensor Module (COM2) | 20 | Single | Internal, &S/C Anti-Contamination | 3.5.5.1 |
| 2A4 | J11 | 25 | -8V.NI.TLM.A | -8V for Baseplate Heaters Side 1 (VA8MA) | 26 | Single | Internal | |
| 1A4 | J12 | 1 | TBD | EED2 Fire | TBD | TBD | S/C, EED Command | 3.5.1.4 |
| 1A4 | J12 | 2 | TBD | EED2 Fire Return | TBD | TBD | S/C, EED Command | 3.5.1.4 |
| 1A4 | J13 | 1 | TBD | EED1 Fire | TBD | TBD | S/C, EED Command | 3.5.1.4 |
| 1A4 | J13 | 2 | TBD | EED1 Fire Return | TBD | TBD | S/C, EED Command | 3.5.1.4 |
| 1A4 | J14 | 1 | TBD | Imager Cooler Cover Deploy Status | TBD | TBD | S/C, Switch Bi-Level Telemetry | 3.5.2.1 |
| 1A4 | J14 | 2 | | Unused | | | S/C | |
| 1A4 | J14 | 3 | TBD | TLM Return | TBD | TBD | S/C, Switch Bi-Level Telemetry | 3.5.2.1 |
| 1A4 | J14 | 4 | | Unused | | | S/C | |
| 1A4 | J14 | 5 | TBD | Imager Cooler Cover Capture Status | TBD | TBD | S/C, Switch Bi-Level Telemetry | 3.5.2.1 |
| 1A4 | J14 | 6 | | Unused | | | S/C | |
| 1A4 | J14 | 7 | TBD | TLM Return | TBD | TBD | S/C, Switch Bi-Level Telemetry | 3.5.2.1 |
| 1A4 | J14 | 8 | | Unused | | | S/C | |
| 1A4 | J14 | 9 | | Unused | | | S/C | |

| Module | J# | Pin# | Signal Name | Signal Description | Wire Size (AWG) | Wire Type | Signal Type | ICD Para. Reference |
|---|---|---|---|---|---|---|---|---|
| 2A6 | J1 | 1 | VB1 | Raw Bus Power | 22 | Single | S/C, Power | 3.4.2 |
| 2A6 | J1 | 2 | VB3 | Raw Bus Power | 22 | Single | S/C, Power | 3.4.2 |
| 2A6 | J1 | 3 | RESERVED | Reserved | | | S/C | |
| 2A6 | J1 | 4 | SC_COM1 | Bus Common From Spacecraft | 22 | Single | S/C, Power | 3.4.2 |
| 2A6 | J1 | 5 | SC_COM3 | Bus Common From Spacecraft | 22 | Single | S/C, Power | 3.4.2 |
| 2A6 | J1 | 6 | | Unused | | | S/C | |
| 2A6 | J1 | 7 | RESERVED | Reserved | | | S/C | |
| 2A6 | J1 | 8 | VS | Raw Shuttle Power | 24 | Single | S/C, Power | 3.4.2 |
| 2A6 | J1 | 9 | VB2 | Raw Bus Power | 22 | Single | S/C, Power | 3.4.2 |
| 2A6 | J1 | 10 | VB4 | Raw Bus Power | 22 | Single | S/C, Power | 3.4.2 |
| 2A6 | J1 | 11 | RESERVED | Reserved | | | S/C | |
| 2A6 | J1 | 12 | SC_COM2 | Bus Common From Spacecraft | 22 | Single | S/C, Power | 3.4.2 |
| 2A6 | J1 | 13 | SC_COM4 | Bus Common From Spacecraft | 26 | Single | S/C, Power | 3.4.2 |
| 2A6 | J1 | 14 | RESERVED | Reserved | | | S/C | |
| 2A6 | J1 | 15 | VS | Raw Shuttle Power | 24 | Single | S/C, Power | 3.4.2 |
| 2A6 | J2 | 1 | BSP1.FUSE.BUS | Fused Bus Power for BP Htrs No.1 (VBPHA1) | 22 | Single | Internal | |
| 2A6 | J2 | 2 | BSP2.FUSE.BUS | Fused Bus Power for BP Htrs No.2 (VBPHB1) | 22 | Single | Internal | |
| 2A6 | J2 | 3 | RCOG.FUSED.BUS | Bus Power for Cooler Outgas Heater (VDRO1) | 20 | Single | Internal | |
| 2A6 | J2 | 4 | FWOG1.FUSE.BUS | Bus Power for Filter Wheel Outgas (VDFO1) | 20 | Single | Internal | |
| 2A6 | J2 | 5 | SCAN.FUSE.BUS | Fused Power for Select Relay Buffer (VBF.SR) | 24 | Single | Internal | |
| 2A6 | J2 | 6 | *PWR.GND* | *Instrument Power Common (COM4)* | *20* | *Single* | Internal | |
| 2A6 | J2 | 7 | CU1.S2.SEL | Cmd Unit 1 Select Side 2 (C1.SELB) | 26 | Single | Internal | |
| 2A6 | J2 | 8 | CU2.S2.SEL | Cmd Unit 2 Select Side 2 (C2.SELB) | 26 | Single | Internal | |
| 2A6 | J2 | 9 | SCAN.PWR.ON.A | Scan Power ON Side 1 (T.SON) | 26 | Single | Internal | |
| 2A6 | J2 | 10 | MOL.PS.A | Scan Side 1 Shutdown (Motor Overload)(SON.A) | 26 | T(10,11) | Internal, &S/C Motor Overload Disable | 3.5.5.2 |
| 2A6 | J2 | 11 | MOL.PS.RTN | Scan Shutdown Return (COM3) | 26 | T(10,11)(11,23) | Internal | |
| 2A6 | J2 | 12 | PWR.GND | Power Supply Return To Sensor Module (COM1) | 20 | Single | Internal, &S/C Anti-Contamination | 3.5.5.1 |
| 2A6 | J2 | 13 | -8V.NI.TLM.B | -8V for Baseplate Heaters Side 2 (VA8MB) | 22 | Single | Internal | |
| 2A6 | J2 | 14 | BSP1.FUSE.BUS | Fused Bus Power for BP Htrs No.1 (VBPHA2) | 22 | Single | Internal | |
| 2A6 | J2 | 15 | BSP2.FUSE.BUS | Fused Bus Power for BP Htrs No.2 (VBPHB2) | 22 | Single | Internal | |
| 2A6 | J2 | 16 | RCOG.FUSED.BUS | Bus Power for Cooler Outgas Heater (VDRO2) | 20 | Single | Internal | |
| 2A6 | J2 | 17 | FWOG2.FUSE.BUS | Bus Power for Filter Wheel Outgas (VDFO2) | 22 | Single | Internal | |
| 2A6 | J2 | 18 | RESERVED | Reserved | | | Internal | |
| 2A6 | J2 | 19 | CU1.S1.SEL | Cmd Unit 1 Select Side 1 (C1.SELA) | 26 | Single | Internal | |
| 2A6 | J2 | 20 | CU2.S1.SEL | Cmd Unit 2 Select Side 1 (C2.SELA) | 26 | Single | Internal | |
| 2A6 | J2 | 21 | SCAN.PWR.ON.B | Scan Power ON Side 2 (T.SON) | 26 | Single | Internal | |
| 2A6 | J2 | 22 | S1S2.SEL.RTN | Side Select Enable (SEL.EN) | 26 | Single | Internal | |
| 2A6 | J2 | 23 | MOL.PS.B | Scan Side 2 Shutdown (Motor Overload)(SONB) | 26 | T(11,23) | Internal, &S/C Motor Overload Disable | 3.5.5.2 |
| 2A6 | J2 | 24 | PWR.GND | Power Supply Return To Sensor Module (COM2) | 20 | Single | Internal, &S/C Anti-Contamination | 3.5.5.1 |
| 2A6 | J2 | 25 | -8V.NI.TLM.A | -8V for Baseplate Heaters Side 1 (VA8MA) | 26 | Single | Internal | |

| Module | J# | Pin# | Signal Name | Signal Description | Wire Size (AWG) | Wire Type | Signal Type | ICD Para. Reference |
|---|---|---|---|---|---|---|---|---|
| 2A6 | J3 | 1 | KEY | Key | | | Internal | |
| 2A6 | J3 | 2 | 9V.SCAN.RTN.A | 9V Scan Return Side 1 | 20 | TS(2,5,8) | Internal | |
| 2A6 | J3 | 3 | +11V.TLM.A | +11V Telemetry Supply Side 1 (VT11PA) | 24 | Single | Internal | |
| 2A6 | J3 | 4 | +18V.FW1 | +18V Filter Wheel Supply Side 1(VF18PA) | 24 | Single | Internal | |
| 2A6 | J3 | 5 | +9V.SCAN.A | +9V Scan Supply Side 1 (V9PA) | 20 | TS(2,5,8) | Internal | |
| 2A6 | J3 | 6 | +7V2.SRV.A | +7V2 Scan Supply Side 1 (V7PYA) | 20 | Single | Internal | |
| 2A6 | J3 | 7 | -8V.TLM.A | -8V Telemetry Supply Side 1 (VT8MA) | 24 | Single | Internal | |
| 2A6 | J3 | 8 | -9V.SCAN.A | -9V Scan Supply Side 1 (V9MA) | 20 | TS(2,5,8) | Internal | |
| 2A6 | J3 | 9 | RESERVED | Reserved | | | Internal | |
| 2A6 | J3 | 10 | +40V.TLM.A | +40V Telem Supply Patch Htr Side 1 (VT40PA) | 26 | Single | Internal | |
| 2A6 | J3 | 11 | RESERVED | Reserved | | | Internal | |
| 2A6 | J3 | 12 | | Unused | | | Internal | |
| 2A6 | J3 | 13 | | Unused | | | Internal | |
| 2A6 | J3 | 14 | T.WAF | Instr Telem Filter Wheel Side 1 OFF (T.WAF) | 26 | Single | Internal | |
| 2A6 | J3 | 15 | | Unused | | | Internal | |
| 2A6 | J3 | 16 | PS.SYNC(1) | 200 KHZ Power Supply Sync Side 1 (Sync1) | 26 | TS(16,33) | Internal | |
| 2A6 | J3 | 17 | | Unused | | | Internal | |
| 2A6 | J3 | 18 | | Unused | | | Internal | |
| 2A6 | J3 | 19 | +7V1.SRV.A | +7V1 Scan Supply Side 1 (V7PXA) | 20 | Single | Internal | |
| 2A6 | J3 | 20 | +17V.TLM.A | +17V Telemetry Supply Side 1 (VT17PA) | 24 | Single | Internal | |
| 2A6 | J3 | 21 | +17V.ELEC.A | +17V Electronics Supply Side 1(V17PA) | 20 | Single | Internal | |
| 2A6 | J3 | 22 | +8V2.ELEC.A | +8V2 Electronics Supply Side 1 (V8PYA) | 20 | Single | Internal | |
| 2A6 | J3 | 23 | FW.PWR.GND | Filter Wheel Return Side 1 (P.RTN) | 24 | Single | Internal | |
| 2A6 | J3 | 24 | -17V.ELEC.A | -17V Electronics Supply Side 1 (V17MA) | 20 | Single | Internal | |
| 2A6 | J3 | 25 | -8V.ELEC.A | -8V Electronics Supply Side 1 (V8MA) | 20 | Single | Internal | |
| 2A6 | J3 | 26 | RESERVED | Reserved | | | Internal | |
| 2A6 | J3 | 27 | RESERVED | Reserved | | | Internal | |
| 2A6 | J3 | 28 | | Unused | | | Internal | |
| 2A6 | J3 | 29 | | Unused | | | Internal | |
| 2A6 | J3 | 30 | T.SELA | Instrument Telemetry-Select Side 1 (Not Used) | n/a | n/a | Internal | |
| 2A6 | J3 | 31 | PS.THERM | Power Supply Thermistor (PS.THM) | 26 | Single | Internal | |
| 2A6 | J3 | 32 | | Unused | | | Internal | |
| 2A6 | J3 | 33 | PS.SYNC.RTN(1) | Power Supply Sync Return Side 1 (SyncR1) | 26 | TS(16,33) | Internal | |
| 2A6 | J3 | 34 | GROUND | Electronics Power Return (P.RTN) | 20 | Single | Internal | |
| 2A6 | J3 | 35 | +8V1.ELEC.A | +8V1 Electronics Supply Side 1 (V8PXA) | 20 | Single | Internal | |
| 2A6 | J3 | 36 | +25V.MOT.A | +25V Scan Motor Side 1 (V25PA) | 20 | TS(36,39,40) | Internal | |
| 2A6 | J3 | 37 | +12V.ELEC.A | +12V Electronics Supply Side 1 (V12PA) | 20 | Single | Internal | |
| 2A6 | J3 | 38 | +8V.ELEC.A | +8V3 Electronics Supply Side 1 (V8PZA) | 20 | Single | Internal | |
| 2A6 | J3 | 39 | 25V.MOT.RTN.A | 25V Scan Return Side 1 | 22 | TS(36,39,40) | Internal | |
| 2A6 | J3 | 40 | -25V.MOT.A | -25V Scan Motor Side 1 (V25MA) | 22 | TS(36,39,40) | Internal | |
| 2A6 | J3 | 41 | T.RTNA | Electronics Power Return (P.RTN) | 20 | Single | Internal | |
| 2A6 | J3 | 42 | | Unused | | | Internal | |
| 2A6 | J3 | 43 | | Unused | | | Internal | |
| 2A6 | J3 | 44 | | Unused | | | Internal | |
| 2A6 | J3 | 45 | | Unused | | | Internal | |
| 2A6 | J3 | 46 | T.RTN | Telemetry Return From Sense Sensors (T.RTN) | 20 | Single | Internal | |
| 2A6 | J3 | 47 | -3V.REF.TEMP1 | -3V Thermistor Ref No. 1 (THM.RTN) | 26 | Single | Internal | |
| 2A6 | J3 | 48 | | Unused | | | Internal | |
| 2A6 | J3 | 49 | | Unused | | | Internal | |
| 2A6 | J3 | 50 | KEY | Key | | | Internal | |

| Module | J# | Pin# | Signal Name | Signal Description | Wire Size (AWG) | Wire Type | Signal Type | ICD Para. Reference |
|---|---|---|---|---|---|---|---|---|
| 2A6 | J4 | 1 | | Unused | | | Internal | |
| 2A6 | J4 | 2 | 9V.SCAN.RTN.B | 9V Scan Return Side 2 | 20 | TS(2,5,8) | Internal | |
| 2A6 | J4 | 3 | +11V.TLM.B | +11V Telemetry Supply Side 2 (VT11PB) | 24 | Single | Internal | |
| 2A6 | J4 | 4 | +18V.FW2 | +18V Filter Wheel Supply Side 2 (VF18PB) | 24 | Single | Internal | |
| 2A6 | J4 | 5 | +9V.SCAN.B | +9V Scan Supply Side 2 (V9PB) | 20 | TS(2,5,8) | Internal | |
| 2A6 | J4 | 6 | +7V2.SRV.B | +7V2 Scan Supply Side 2 (V7PYB) | 20 | Single | Internal | |
| 2A6 | J4 | 7 | -8V.TLM.B | -8V Telemetry Supply Side 2 (VT8MB) | 24 | Single | Internal | |
| 2A6 | J4 | 8 | -9V.SCAN.B | -9V Scan Supply Side 2 (V9MB) | 20 | TS(2,5,8) | Internal | |
| 2A6 | J4 | 9 | RESERVED | Reserved | | | Internal | |
| 2A6 | J4 | 10 | +40V.TLM.B | +40V Telemetry Supply Side 2 (VT40PB) | 26 | Single | Internal | |
| 2A6 | J4 | 11 | RESERVED | Reserved | | | Internal | |
| 2A6 | J4 | 12 | | Unused | | | Internal | |
| 2A6 | J4 | 13 | | Unused | | | Internal | |
| 2A6 | J4 | 14 | T.WBF | Instr Telem Filter Wheel Side 2 OFF(T.WBF) | 26 | Single | Internal | |
| 2A6 | J4 | 15 | | Unused | | | Internal | |
| 2A6 | J4 | 16 | PS.SYNC(2) | 200 KHZ Power Supply Sync Side 2 (Sync2) | 26 | TS(16,33) | Internal | |
| 2A6 | J4 | 17 | KEY | Key | | | Internal | |
| 2A6 | J4 | 18 | KEY | Key | | | Internal | |
| 2A6 | J4 | 19 | +7V1.SRV.B | +7V1 Scan Supply Side 2 (V7PXB) | 20 | Single | Internal | |
| 2A6 | J4 | 20 | +17V.TLM.B | +17V Telemetry Supply Side 2 (VT17PB) | 24 | Single | Internal | |
| 2A6 | J4 | 21 | +17V.ELEC.B | +17V Electronics Supply Side 2 (V17PB) | 20 | Single | Internal | |
| 2A6 | J4 | 22 | +8V2.ELEC.B | +8V2 Electronics Supply Side 2 (V8PYB) | 20 | Single | Internal | |
| 2A6 | J4 | 23 | FW.PWR.GND | Filter Wheel Power Return Side 2 (P.RTN) | 24 | Single | Internal | |
| 2A6 | J4 | 24 | -17V.ELEC.B | -17V Electronics Supply Side 2 (V17MB) | 20 | Single | Internal | |
| 2A6 | J4 | 25 | -8V.ELEC.B | -8V Electronics Supply Side 2 (V8MB) | 20 | Single | Internal | |
| 2A6 | J4 | 26 | RESERVED | Reserved | | | Internal | |
| 2A6 | J4 | 27 | RESERVED | Reserved | | | Internal | |
| 2A6 | J4 | 28 | | Unused | | | Internal | |
| 2A6 | J4 | 29 | | Unused | | | Internal | |
| 2A6 | J4 | 30 | T.SON | Instrument Telemetry-Scan ON (Not Used) | n/a | n/a | Internal | |
| 2A6 | J4 | 31 | POS.I.SENSE | Positive Instrument Current Sense (PIS) | 26 | Single | Internal | |
| 2A6 | J4 | 32 | | Unused | | | Internal | |
| 2A6 | J4 | 33 | PS.SYNC.RTN(2) | Power Supply Sync Return Side 2 (SyncR2) | 26 | TS(16,33) | Internal | |
| 2A6 | J4 | 34 | GROUND | Electronics Power Return (P.RTN) | 20 | Single | Internal | |
| 2A6 | J4 | 35 | +8V1.ELEC.B | +8V1 Electronics Supply Side 2 (V8PXB) | 20 | Single | Internal | |
| 2A6 | J4 | 36 | +25V.MOT.B | +25V Scan Motor Side 2 (V25PB) | 22 | TS(36,39,40) | Internal | |
| 2A6 | J4 | 37 | +12V.ELEC.B | +12V Electronics Supply Side 2 (V12PB) | 20 | Single | Internal | |
| 2A6 | J4 | 38 | +8V.ELEC.B | +8V3 Electronics Supply Side 2 (V8PZB) | 20 | Single | Internal | |
| 2A6 | J4 | 39 | 25V.MOT.RTN.B | 25V Scan Return Side 2 | 22 | TS(36,39,40) | Internal | |
| 2A6 | J4 | 40 | -25V.MOT.B | -25V Scan Motor Side 2 (V25MB) | 22 | TS(36,39,40) | Internal | |
| 2A6 | J4 | 41 | T.RTNB | Electronics Power Return (P.RTN) | 20 | Single | Internal | |
| 2A6 | J4 | 42 | | Unused | | | Internal | |
| 2A6 | J4 | 43 | | Unused | | | Internal | |
| 2A6 | J4 | 44 | | Unused | | | Internal | |
| 2A6 | J4 | 45 | | Unused | | | Internal | |
| 2A6 | J4 | 46 | T.RTN | Telemetry Return From Sense Sensors (T.RTN) | 20 | Single | Internal | |
| 2A6 | J4 | 47 | NEG.I.SENSE | Negative Instrument Current Sense (NIS) | 26 | Single | Internal | |
| 2A6 | J4 | 48 | | Unused | | | Internal | |
| 2A6 | J4 | 49 | | Unused | | | Internal | |
| 2A6 | J4 | 50 | | Unused | | | Internal | |

| Module | J# | Pin# | Signal Name | Signal Description | Wire Size (AWG) | Wire Type | Signal Type | ICD Para. Reference |
|---|---|---|---|---|---|---|---|---|
| 2A6 | J5 | 1 | C1.ION | Instrument ON Cmd Unit 1 | 26 | Single | S/C, Pulse Command | 3.5.1.2 |
| 2A6 | J5 | 2 | C1.SELA | Electronics Side 1 Select Cmd Unit 1 | 26 | Single | S/C, Pulse Command | 3.5.1.2 |
| 2A6 | J5 | 3 | C1.SON | Scan Motor ON Cmd Unit 1 | 26 | Single | S/C, Pulse Command | 3.5.1.2 |
| 2A6 | J5 | 4 | C1.WON | Filter Wheel Side 1 ON Cmd Unit 1 | 26 | Single | S/C, Pulse Command | 3.5.1.2 |
| 2A6 | J5 | 5 | C1.WOF | Filter Wheel Side 1 OFF Cmd Unit 1 | 26 | Single | S/C, Pulse Command | 3.5.1.2 |
| 2A6 | J5 | 6 | C2.ION | Instrument ON Cmd Unit 2 | 26 | Single | S/C, Pulse Command | 3.5.1.2 |
| 2A6 | J5 | 7 | C2.SELA | Electronics Side 1 Select Cmd Unit 2 | 26 | Single | S/C, Pulse Command | 3.5.1.2 |
| 2A6 | J5 | 8 | C2.SON | Scan Motor ON Cmd Unit 2 | 26 | Single | S/C, Pulse Command | 3.5.1.2 |
| 2A6 | J5 | 9 | C2.WON | Filter Wheel Side 1 ON Cmd Unit 2 | 26 | Single | S/C, Pulse Command | 3.5.1.2 |
| 2A6 | J5 | 10 | C2.WOF | Filter Wheel Side 1 OFF Cmd Unit 2 | 26 | Single | S/C, Pulse Command | 3.5.1.2 |
| 2A6 | J5 | 11 | | Unused | | | S/C | |
| 2A6 | J5 | 12 | SC_COM | Bus Voltage Common (Spacecraft) | 26 | Single | S/C, Bi-Level Command | 3.5.1.1 |
| 2A6 | J5 | 13 | | Unused | | | S/C | |
| 2A6 | J5 | 14 | ST.ION | Telemetry Instrument ON | 26 | Single | S/C, Relay Bi-Level Telemetry | 3.5.2.1 |
| 2A6 | J5 | 15 | ST.SON | Telemetry Scan ON | 26 | Single | S/C, Relay Bi-Level Telemetry | 3.5.2.1 |
| 2A6 | J5 | 16 | ST.WBN | Telemetry Filter Wheel Side 2 ON | 26 | Single | S/C, Relay Bi-Level Telemetry | 3.5.2.1 |
| 2A6 | J5 | 17 | | Unused | | | S/C | |
| 2A6 | J5 | 18 | RESERVED | Reserved | | | S/C | |
| 2A6 | J5 | 19 | C2.EON | Electronics ON Cmd Unit 2 | 24 | Single | S/C, Bi-Level Command | 3.5.1.1 |
| 2A6 | J5 | 20 | C1.IOF | Instrument OFF Cmd Unit 1 | 26 | Single | S/C, Pulse Command | 3.5.1.2 |
| 2A6 | J5 | 21 | C1.SELB | Electronics Side 2 Select Cmd Unit 1 | 26 | Single | S/C, Pulse Command | 3.5.1.2 |
| 2A6 | J5 | 22 | C1.SOF | Scan Motor OFF Cmd Unit 1 | 26 | Single | S/C, Pulse Command | 3.5.1.2 |
| 2A6 | J5 | 23 | C1.WBN | Filter Wheel Side 2 ON Cmd Unit 1 | 26 | Single | S/C, Relay Bi-Level Telemetry | 3.5.2.1 |
| 2A6 | J5 | 24 | C1.RTN | Cmd Unit 1 Return | 26 | Single | S/C, Pulse Command | 3.5.1.2 |
| 2A6 | J5 | 25 | C2.IOF | Instrument OFF Cmd Unit 2 | 26 | Single | S/C, Pulse Command | 3.5.1.2 |
| 2A6 | J5 | 26 | C2.SELB | Electronics Side 2 Select Cmd Unit 2 | 26 | Single | S/C, Pulse Command | 3.5.1.2 |
| 2A6 | J5 | 27 | C2.SOF | Scan Motor OFF Cmd Unit 2 | 26 | Single | S/C, Pulse Command | 3.5.1.2 |
| 2A6 | J5 | 28 | C2.WBN | Filter Wheel Side 2 ON Cmd Unit 2 | 26 | Single | S/C, Relay Bi-Level Telemetry | 3.5.2.1 |
| 2A6 | J5 | 29 | C2.RTN | Cmd Unit 2 Return | 26 | Single | S/C, Pulse Command | 3.5.1.2 |
| 2A6 | J5 | 30 | | Unused | | | S/C | |
| 2A6 | J5 | 31 | SC_COM | Bus Voltage Common (Spacecraft) | 26 | Single | S/C, Bi-Level Command | 3.5.1.1 |
| 2A6 | J5 | 32 | | Unused | | | S/C | |
| 2A6 | J5 | 33 | ST.SELA | Telemetry Select Side 1 | 26 | Single | S/C, Relay Bi-Level Telemetry | 3.5.2.1 |
| 2A6 | J5 | 34 | ST.WAN | Telemetry Filter Wheel Side 1 ON | 26 | Single | S/C, Relay Bi-Level Telemetry | 3.5.2.1 |
| 2A6 | J5 | 35 | ST.RTN | Telemetry Return From Sense Sensors | 26 | Single | S/C, Relay Bi-Level Telemetry | 3.5.2.1 |
| 2A6 | J5 | 36 | RESERVED | Reserved | | | S/C | |
| 2A6 | J5 | 37 | C1.EON | Electronics ON Cmd Unit 1 | 24 | Single | S/C, Bi-Level Command | 3.5.1.1 |

| Module | J# | Pin# | Signal Na ne | Signal Description | Wire Size (AWG) | Wire Type | Signal Type | ICD Para. Reference |
|---|---|---|---|---|---|---|---|---|
| 2A6 | J6 | 1 | VF1 | F1 Test | 22 | Single | Internal, Fuse Test | 3.4.1.4 |
| 2A6 | J6 | 2 | VBPHA2 | Bus Power for Baseplate Heater Side 1 | 20 | Single | Internal, Fuse Test | 3.4.1.4 |
| 2A6 | J6 | 3 | VBPHB1 | Bus Power for Baseplate Heater Side 2 | 20 | Single | Internal, Fuse Test | 3.4.1.4 |
| 2A6 | J6 | 4 | VF6 | F6 Test | 24 | Single | Internal | |
| 2A6 | J6 | 5 | VF8 | F8 Test | 22 | Single | Internal, Fuse Test | 3.4.1.4 |
| 2A6 | J6 | 6 | VF10 | F10 Test | 22 | Single | Internal, Fuse Test | 3.4.1.4 |
| 2A6 | J6 | 7 | VF12 | F12 Test | 22 | Single | Internal, Fuse Test | 3.4.1.4 |
| 2A6 | J6 | 8 | VF14 | F14 Test | 24 | Single | Internal, Fuse Test | 3.4.1.4 |
| 2A6 | J6 | 9 | VF16 | F16 Test | 24 | Single | Internal, Fuse Test | 3.4.1.4 |
| 2A6 | J6 | 10 | VF18 | F18 Test | 24 | Single | Internal, Fuse Test | 3.4.1.4 |
| 2A6 | J6 | 11 | VF20 | F20 Test | 24 | Single | Internal, Fuse Test | 3.4.1.4 |
| 2A6 | J6 | 12 | VF22 | F22 Test | 24 | Single | Internal, Fuse Test | 3.4.1.4 |
| 2A6 | J6 | 13 | | Unused | | | Internal | |
| 2A6 | J6 | 14 | | Unused | | | Internal | |
| 2A6 | J6 | 15 | | Unused | | | Internal | |
| 2A6 | J6 | 16 | | Unused | | | Internal | |
| 2A6 | J6 | 17 | | Unused | | | Internal | |
| 2A6 | J6 | 18 | VF2 | F2 Test | 22 | Single | Internal, Fuse Test | 3.4.1.4 |
| 2A6 | J6 | 19 | VF3 | F3 Test | 22 | Single | Internal, Fuse Test | 3.4.1.4 |
| 2A6 | J6 | 20 | VBPHB2 | Bus Power for Baseplate Heater Side 2 | 20 | Single | Internal, Fuse Test | 3.4.1.4 |
| 2A6 | J6 | 21 | VSF | Fused Shuttle Power | 24 | Single | Internal | 3.4.1.4 |
| 2A6 | J6 | 22 | VCPC2 | Fuseti Power for Convertors Side 2 | 24 | Single | Internal, Fuse Test | 3.4.1.4 |
| 2A6 | J6 | 23 | VCPC1 | Fused Power for Convertors Side 1 | 20 | Single | Internal, Fuse Test | 3.4.1.4 |
| 2A6 | J6 | 24 | VCRO | Fused Power Cooler Outgas | 20 | Single | Internal, Fuse Test | 3.4.1.4 |
| 2A6 | J6 | 25 | VCFO1 | Fused Power for Filter Wheel Outgas Side 1 | 24 | Single | Internal, Fuse Test | 3.4.1.4 |
| 2A6 | J6 | 26 | VCFO2 | Fused Power for Filter Wheel Outgas Side 2 | 24 | Single | Internal, Fuse Test | 3.4.1.4 |
| 2A6 | J6 | 27 | VCFWA | Fused Power for Filter Wheel Supply Side 1 | 24 | Single | Internal, Fuse Test | 3.4.1.4 |
| 2A6 | J6 | 28 | VCFWB | Fused Power for Filter Wheel Supply Side 2 | 24 | Single | Internal, Fuse Test | 3.4.1.4 |
| 2A6 | J6 | 29 | VBF.SR | Fused Power for Select Relay Buffer | 24 | Single | Internal, Fuse Test | 3.4.1.4 |
| 2A6 | J6 | 30 | | Unused | | | Internal | |
| 2A6 | J6 | 31 | | Unused | | | Internal | |
| 2A6 | J6 | 32 | | Unused | | | Internal | |
| 2A6 | J6 | 33 | | Unused | | | Internal | |
| 2A6 | J6 | 34 | VBPHA1 | Bus Power for Baseplate Heater Side 1 | 20 | Single | Internal, Fuse Test | 3.4.1.4 |
| 2A6 | J6 | 35 | VF4 | F4 Test | 22 | Single | Internal, Fuse Test | 3.4.1.4 |
| 2A6 | J6 | 36 | VF5 | F5 Test | 24 | Single | Internal, Fuse Test | 3.4.1.4 |
| 2A6 | J6 | 37 | VF7 | F7 Test | 22 | Single | Internal, Fuse Test | 3.4.1.4 |
| 2A6 | J6 | 38 | VF9 | F9 Test | 22 | Single | Internal, Fuse Test | 3.4.1.4 |
| 2A6 | J6 | 39 | VF11 | F11 Test | 22 | Single | Internal, Fuse Test | 3.4.1.4 |
| 2A6 | J6 | 40 | VF13 | F13 Test | 24 | Single | Internal, Fuse Test | 3.4.1.4 |
| 2A6 | J6 | 41 | VF15 | F15 Test | 24 | Single | Internal, Fuse Test | 3.4.1.4 |
| 2A6 | J6 | 42 | VF17 | F17 Test | 24 | Single | Internal, Fuse Test | 3.4.1.4 |
| 2A6 | J6 | 43 | VF19 | F19 Test | 24 | Single | Internal, Fuse Test | 3.4.1.4 |
| 2A6 | J6 | 44 | VF21 | F21 Test | 24 | Single | Internal, Fuse Test | 3.4.1.4 |
| 2A6 | J6 | 45 | | Unused | | | Internal | |
| 2A6 | J6 | 46 | | Unused | | | Internal | |
| 2A6 | J6 | 47 | | Unused | | | Internal | |
| 2A6 | J6 | 48 | | Unused | | | Internal | |
| 2A6 | J6 | 49 | | Unused | | | Internal | |
| 2A6 | J6 | 50 | | Unused | | | Internal | |

| Module | J# | Pin# | Signal Name | Signal Description | Wire Size (AWG) | Wire Type | Signal Type | ICD Para. Reference |
|---|---|---|---|---|---|---|---|---|
| 2A8 | J1 | 1 | EW.X128S.IN.A | E-W X128 Sine Side 1 | 26 | TS(1,18) | Internal | |
| 2A8 | J1 | 2 | EW.X1SIN.IN.A | E-W X1 Sine Side 1 | 26 | TS(2,19) | Internal | |
| 2A8 | J1 | 3 | EW.X128S.IN.B | E-W X128 Sine Side 2 | 26 | TS(3,20) | Internal | |
| 2A8 | J1 | 4 | NS.X1SIN.IN.A | N-S X1 Sine Side 1 | 26 | TS(4,21) | Internal | |
| 2A8 | J1 | 5 | NS.X1SIN.IN.B | N-S X1 Sine Side 2 | 26 | TS(5,22) | Internal | |
| 2A8 | J1 | 6 | NS.X128S.IN.B | N-S X128 Sine Side 2 | 26 | TS(6,23) | Internal | |
| 2A8 | J1 | 7 | RESERVED | Reserved | | | Internal | |
| 2A8 | J1 | 8 | | Unused | | | Internal | |
| 2A8 | J1 | 9 | 9V.SCAN.RTN.A | 9V Scan Return Side 1 | 24 | Single | Internal | |
| 2A8 | J1 | 10 | | Unused | | | Internal | |
| 2A8 | J1 | 11 | GROUND | Electronics Module Ground | 24 | Single | Internal | |
| 2A8 | J1 | 12 | NSQ.SCNDR.B | N-S Quad Scan Drive Side 2 | 26 | TS(12,13) | Internal | |
| 2A8 | J1 | 13 | NSQ.SCNDR.RN.B | N-S Quad Scan Drive Return Side 2 | 26 | TS(12,13) | Internal | |
| 2A8 | J1 | 14 | GROUND | Electronics Module Ground | 24 | Single | Internal | |
| 2A8 | J1 | 15 | EW.SCNDR.RN.A | E-W Scan Drive Return Side 1 | 26 | TS(15,16) | Internal | |
| 2A8 | J1 | 16 | EW.SCNDR.A | E-W Scan Drive Side 1 | 26 | TS(15,16) | Internal | |
| 2A8 | J1 | 17 | KEY | Key | | | Internal | |
| 2A8 | J1 | 18 | EW.X128S.RTN.A | E-W X128 Sine Return Side 1 | 26 | TS(1,18) | Internal | |
| 2A8 | J1 | 19 | EW.X1SIN.RTN.A | E-W X1 Sine Return Side 1 | 26 | TS(2,19) | Internal | |
| 2A8 | J1 | 20 | EW.X128S.RTN.B | E-W X128 Sine Return Side 2 | 26 | TS(3,20) | Internal | |
| 2A8 | J1 | 21 | NS.X1SIN.RTN.A | N-S X1 Sine Return Side 1 | 26 | TS(4,21) | Internal | |
| 2A8 | J1 | 22 | NS.X1SIN.RTN.B | N-S X1 Sine Return Side 2 | 26 | TS(5,22) | Internal | |
| 2A8 | J1 | 23 | NS.X128S.RTN.B | N-S X128 Sine Return Side 2 | 26 | TS(6,23) | Internal | |
| 2A8 | J1 | 24 | RESERVED | Reserved | | | Internal | |
| 2A8 | J1 | 25 | | Unused | | | Internal | |
| 2A8 | J1 | 26 | 9V.SCAN.RTN.B | 9V Scan Return Side 2 | 24 | Single | Internal | |
| 2A8 | J1 | 27 | | Unused | | | Internal | |
| 2A8 | J1 | 28 | GROUND | Electronics Module Ground | 24 | Single | Internal | |
| 2A8 | J1 | 29 | NST.SCNDR.A | N-S True Scan Drive Side 1 | 26 | TS(29,30) | Internal | |
| 2A8 | J1 | 30 | NST.SCNDR.RN.A | N-S True Scan Drive Return Side 1 | 26 | TS(29,30) | Internal | |
| 2A8 | J1 | 31 | GROUND | Electronics Module Ground | 24 | Single | Internal | |
| 2A8 | J1 | 32 | EW.SCNDR.RN.B | E-W Scan Drive Return Side 2 | 26 | TS(32,33) | Internal | |
| 2A8 | J1 | 33 | EW.SCNDR.B | E-W Scan Drive Side 2 | 26 | TS(32,33) | Internal | |
| 2A8 | J1 | 34 | KEY | Key | | | Internal | |
| 2A8 | J1 | 35 | EW.X1SIN.IN.B | E-W X1 Sine Side 2 | 26 | TS(35,36) | Internal | |
| 2A8 | J1 | 36 | EW.X1SIN.RTN.B | E-W X1 Sine Return Side 2 | 26 | TS(35,36) | Internal | |
| 2A8 | J1 | 37 | NS.X128S.IN.A | N-S X128 Sine Side 1 | 26 | TS(37,38) | Internal | |
| 2A8 | J1 | 38 | NS.X128S.RTN.A | N-S X128 Sine Return Side 1 | 26 | TS(37,38) | Internal | |
| 2A8 | J1 | 39 | RESERVED | Reserved | | | Internal | |
| 2A8 | J1 | 40 | RESERVED | Reserved | | | Internal | |
| 2A8 | J1 | 41 | +10V.SCAN.A | +10V Scan Side 1 | 26 | T(41,44) | Internal | |
| 2A8 | J1 | 42 | +10V.SCAN.B | +10V Scan Side 2 | 26 | T(42,45) | Internal | |
| 2A8 | J1 | 43 | GROUND | Electronics Module Ground | 24 | Single | Internal | |
| 2A8 | J1 | 44 | 10V.SCAN.RTN.A | 10V Scan Return Side 1 | 26 | T(41,44) | Internal | |
| 2A8 | J1 | 45 | 10V.SCAN.RTN.B | 10V Scan Return Side 2 | 26 | T(42,45) | Internal | |
| 2A8 | J1 | 46 | NST.SCNDR.B | N-S True Scan Drive Side 2 | 26 | TS(46,47) | Internal | |
| 2A8 | J1 | 47 | NST.SCNDR.RN.B | N-S True Scan Drive Return Side 2 | 26 | TS(46,47) | Internal | |
| 2A8 | J1 | 48 | GROUND | Electronics Module Ground | 24 | Single | Internal | |
| 2A8 | J1 | 49 | NSQ.SCNDR.RN.A | N-S Quad Scan Drive Return Side 1 | 26 | TS(49,50) | Internal | |
| 2A8 | J1 | 50 | NSQ.SCNDR.A | N-S Quad Scan Drive Side 1 | 26 | TS(49,50) | Internal | |

| Module | J# | Pin# | Signal Name | Signal Description | Wire Size (AWG) | Wire Type | Signal Type | ICD Para. Reference |
|---|---|---|---|---|---|---|---|---|
| 2A8 | J2 | 1 | EW.X128C.IN.A | E-W X128 Cosine Side 1 | 26 | TS(1,18) | Internal | |
| 2A8 | J2 | 2 | EW.X1COS.IN.A | E-W X1 Cosine Side 1 | 26 | TS(2,19) | Internal | |
| 2A8 | J2 | 3 | EW.X128C.IN.B | E-W X128 Cosine Side 2 | 26 | TS(3,20) | Internal | |
| 2A8 | J2 | 4 | NS.X1COS.IN.A | N-S X1 Cosine Side 1 | 26 | TS(4,21) | Internal | |
| 2A8 | J2 | 5 | NS.X1COS.IN.B | N-S X1 Cosine Side 2 | 26 | TS(5,22) | Internal | |
| 2A8 | J2 | 6 | NS.X128C.IN.B | N-S X128 Cosine Side 2 | 26 | TS(6,23) | Internal | |
| 2A8 | J2 | 7 | RESERVED | Reserved | | | Internal | |
| 2A8 | J2 | 8 | | Unused | | | Internal | |
| 2A8 | J2 | 9 | | Unused | | | Internal | |
| 2A8 | J2 | 10 | | Unused | | | Internal | |
| 2A8 | J2 | 11 | | Unused | | | Internal | |
| 2A8 | J2 | 12 | | Unused | | | Internal | |
| 2A8 | J2 | 13 | | Unused | | | Internal | |
| 2A8 | J2 | 14 | CLR.PTCH.UT | Cooler Patch Under Temp | 26 | Single | Internal | |
| 2A8 | J2 | 15 | CLR.HSG.UT | Cooler Housing Under Temp | 26 | Single | Internal | |
| 2A8 | J2 | 16 | CLR.RAD.UT | Cooler Radiator Under Temp | 26 | Single | Internal | |
| 2A8 | J2 | 17 | PATCH.HTR | Patch Control Heater | 26 | Single | Internal | |
| 2A8 | J2 | 18 | EW.X128C.RTN.A | E-W X128 Cosine Return Side 1 | 26 | TS(1,18) | Internal | |
| 2A8 | J2 | 19 | EW.X1COS.RTN.A | E-W X1 Cosine Return Side 1 | 26 | TS(2,19) | Internal | |
| 2A8 | J2 | 20 | EW.X128C.RTN.B | E-W X128 Cosine Return Side 2 | 26 | TS(3,20) | Internal | |
| 2A8 | J2 | 21 | NS.X1COS.RTN.A | N-S X1 Cosine Return Side 1 | 26 | TS(4,21) | Internal | |
| 2A8 | J2 | 22 | NS.X1COS.RTN.B | N-S X1 Cosine Return Side 2 | 26 | TS(5,22) | Internal | |
| 2A8 | J2 | 23 | NS.X128C.RTN.B | N-S X128 Cosine Return Side 2 | 26 | TS(6,23) | Internal | |
| 2A8 | J2 | 24 | RESERVED | Reserved | | | Internal | |
| 2A8 | J2 | 25 | RETRO.DELAY.A | Retrotorque Delay Side 1 | 26 | Single | Internal | |
| 2A8 | J2 | 26 | RETRO.DELAY.B | Retrotorque Delay Side 2 | 26 | Single | Internal | |
| 2A8 | J2 | 27 | AGBEW.A | AGB EAST-WEST Side 1 | 26 | Single | Internal | |
| 2A8 | J2 | 28 | AGBEW.B | AGB EAST-WEST Side 2 | 26 | Single | Internal | |
| 2A8 | J2 | 29 | | Unused | | | Internal | |
| 2A8 | J2 | 30 | | Unused | | | Internal | |
| 2A8 | J2 | 31 | GROUND | Electronics Module Ground | 24 | Single | Internal | |
| 2A8 | J2 | 32 | TEMP.SEL | Temperature Select | 26 | Single | Internal | |
| 2A8 | J2 | 33 | KEY | Key | | | Internal | |
| 2A8 | J2 | 34 | KEY | Key | | | Internal | |
| 2A8 | J2 | 35 | EW.X1COS.IN.B | E-W X1 Cosine Side 2 | 26 | TS(35,36) | Internal | |
| 2A8 | J2 | 36 | EW.X1COS.RTN.B | E-W X1 Cosine Return Side 2 | 26 | TS(35,36) | Internal | |
| 2A8 | J2 | 37 | NS.X128C.IN.A | N-S X128 Cosine Side 1 | 26 | TS(37,38) | Internal | |
| 2A8 | J2 | 38 | NS.X128C.RTN.A | N-S X128 Cosine Return Side 1 | 26 | TS(37,38) | Internal | |
| 2A8 | J2 | 39 | RESERVED | Reserved | | | Internal | |
| 2A8 | J2 | 40 | RESERVED | Reserved | | | Internal | |
| 2A8 | J2 | 41 | X.ADD.CLK.A | X Address Clock Side 1 | 26 | Single | Internal | |
| 2A8 | J2 | 42 | X.ADD.CLK.B | X Address Clock Side 2 | 26 | Single | Internal | |
| 2A8 | J2 | 43 | EW.MITEST.A | E-W Motor Current Test Side 1 | 26 | T(43,44) | Internal | |
| 2A8 | J2 | 44 | EW.MITEST.RN.A | E-W Motor Current Test Return Side 1 | 26 | T(43,44) | Internal | |
| 2A8 | J2 | 45 | EW.MITEST.B | E-W Motor Current Test Side 2 | 26 | T(45,46) | Internal | |
| 2A8 | J2 | 46 | EW.MITEST.RN.B | E-W Motor Current Test Return Side 2 | 26 | T(45,46) | Internal | |
| 2A8 | J2 | 47 | NS.MITEST.A | N-S Motor Current Test Side 1 | 26 | T(47,48) | Internal | |
| 2A8 | J2 | 48 | NS.MITEST.RN.A | N-S Motor Current Test Return Side 1 | 26 | T(47,48) | Internal | |
| 2A8 | J2 | 49 | NS.MITEST.B | N-S Motor Current Test Side 2 | 26 | T(49,50) | Internal | |
| 2A8 | J2 | 50 | NS.MITEST.RN.B | N-S Motor Current Test Return Side 2 | 26 | T(49,50) | Internal | |

| Module | J# | Pin# | Signal Name | Signal Description | Wire Size (AWG) | Wire Type | Signal Type | ICD Para. Reference |
|---|---|---|---|---|---|---|---|---|
| 2A8 | J3 | 1 | | Unused | | | Internal | |
| 2A8 | J3 | 2 | DAT.RDY.CU2.A | Proportional Command Data Ready Side 1 | 26 | Single | S/C, Proportional Command | 3.5.1.3 |
| 2A8 | J3 | 3 | DAT.RDY.CU2.B | Proportional Command Data Ready Side 2 | 26 | Single | S/C, Proportional Command | 3.5.1.3 |
| 2A8 | J3 | 4 | SC.CLOCK.CU2.A | Proportional Command Strobe Side 1 | 26 | Single | S/C, Proportional Command | 3.5.1.3 |
| 2A8 | J3 | 5 | SC.CLOCK.CU2.B | Proportional Command Strobe Side 2 | 26 | Single | S/C, Proportional Command | 3.5.1.3 |
| 2A8 | J3 | 6 | SC.DATA.CU2.A | Proportional Command Data Side 1 | 26 | Single | S/C, Proportional Command | 3.5.1.3 |
| 2A8 | J3 | 7 | SC.DATA.CU2.B | Proportional Command Data Side 2 | 26 | Single | S/C, Proportional Command | 3.5.1.3 |
| 2A8 | J3 | 8 | GROUND | Proportional Command Return | 24 | Single | S/C, Proportional Command | 3.5.1.3 |
| 2A8 | J3 | 9 | IR.CAL.EN.CU2 | Auto B.B. Calibrate Enable | 26 | Single | S/C, Pulse Command | 3.5.1.2 |
| 2A8 | J3 | 10 | IR.CAL.DIS.CU2 | Auto B.B. Calibrate Inhibit | 26 | Single | S/C, Pulse Command | 3.5.1.2 |
| 2A8 | J3 | 11 | CU2.PTCH.ON.LO | Patch Temp Control ON LOW | 26 | Single | S/C, Pulse Command | 3.5.1.2 |
| 2A8 | J3 | 12 | CU2.PTCH.HIGH | Patch Temp HIGH Select | 26 | Single | S/C, Pulse Command | 3.5.1.2 |
| 2A8 | J3 | 13 | CU2.PTCH.OFF | Patch Temp Control OFF | 26 | Single | S/C, Pulse Command | 3.5.1.2 |
| 2A8 | J3 | 14 | SPC.LOOK.E.CU2 | Space Look EAST | 26 | Single | S/C, Pulse Command | 3.5.1.2 |
| 2A8 | J3 | 15 | SPC.LOOK.W.CU2 | Space Look WEST | 26 | Single | S/C, Pulse Command | 3.5.1.2 |
| 2A8 | J3 | 16 | SCAN.RESET.CU2 | Scan Reset | 26 | Single | S/C, Pulse Command | 3.5.1.2 |
| 2A8 | J3 | 17 | NORM.FR.ST.CU2 | Normal Frame Start | 26 | Single | S/C, Pulse Command | 3.5.1.2 |
| 2A8 | J3 | 18 | PTY1.FR.ST.CU2 | Priority 1 Frame Start | 26 | Single | S/C, Pulse Command | 3.5.1.2 |
| 2A8 | J3 | 19 | PTY2.FR.ST.CU2 | Priority 2 Frame Start | 26 | Single | S/C, Pulse Command | 3.5.1.2 |
| 2A8 | J3 | 20 | STAR.FR.ST.CU2 | Star Frame Start | 26 | Single | S/C, Pulse Command | 3.5.1.2 |
| 2A8 | J3 | 21 | BIAS.CU2.ON | Detector Bias ON | 26 | Single | S/C, Pulse Command | 3.5.1.2 |
| 2A8 | J3 | 22 | BIAS.CU2.OFF | Detector Bias OFF | 26 | Single | S/C, Pulse Command | 3.5.1.2 |
| 2A8 | J3 | 23 | IMC2.RNGSEL.HI | IMC Range Select HIGH | 26 | Single | S/C, Pulse Command | 3.5.1.2 |
| 2A8 | J3 | 24 | IMC2.RNGSEL.LO | IMC Range Select LOW | 26 | Single | S/C, Pulse Command | 3.5.1.2 |
| 2A8 | J3 | 25 | | Unused | | | S/C, Pulse Command | 3.5.1.2 |
| 2A8 | J3 | 26 | CMD.RELAY.RTN | Cmd Unit 2 Return | 24 | Single | S/C, Pulse Command | 3.5.1.2 |
| 2A8 | J3 | 27 | CMD.RELAY.RTN | Cmd Unit 2 Return | 24 | Single | S/C, Pulse Command | 3.5.1.2 |
| 2A8 | J3 | 28 | CHASSIS GROUND | Chassis Ground | 26 | Single | S/C, | 3.5.3 |
| 2A8 | J3 | 29 | WB.SDATA.SLD.B | Wideband Coax Shield Side 2 | 26 | Single | S/C, | 3.5.3 |
| 2A8 | J3 | 30 | | Unused | | | S/C, Pulse Command | 3.5.1.2 |
| 2A8 | J3 | 31 | | Unused | | | S/C | |
| 2A8 | J3 | 32 | | Unused | | | S/C | |
| 2A8 | J3 | 33 | | Unused | | | S/C | |
| 2A8 | J3 | 34 | KEY | Key | | | S/C | |
| 2A8 | J3 | 35 | | Unused | | | S/C | |
| 2A8 | J3 | 36 | | Unused | | | S/C | |
| 2A8 | J3 | 37 | | Unused | | | S/C | |
| 2A8 | J3 | 38 | | Unused | | | S/C | |
| 2A8 | J3 | 39 | | Unused | | | S/C | |
| 2A8 | J3 | 40 | | Unused | | | S/C | |
| 2A8 | J3 | 41 | | Unused | | | S/C | |
| 2A8 | J3 | 42 | | Unused | | | S/C | |
| 2A8 | J3 | 43 | | Unused | | | S/C | |
| 2A8 | J3 | 44 | | Unused | | | S/C | |
| 2A8 | J3 | 45 | | Unused | | | S/C | |
| 2A8 | J3 | 46 | | Unused | | | S/C | |
| 2A8 | J3 | 47 | | Unused | | | S/C | |
| 2A8 | J3 | 48 | | Unused | | | S/C | |
| 2A8 | J3 | 49 | | Unused | | | S/C | |
| 2A8 | J3 | 50 | KEY | Key | | | S/C | |

| Module | J# | Pin# | Signal Name | Signal Description | Wire Size (AWG) | Wire Type | Signal Type | ICD Para. Reference |
|---|---|---|---|---|---|---|---|---|
| 2A8 | J4 | 1 | WB.SDATA.B | Wideband Serial Data Side 2 | RG58AU | Coax(Center) | S/C, Wideband Data | 3.5.3 |
| 2A8 | J4 | 2 | WB.SDATA.SLD.B | Wideband Serial Data Return Side 2 | RG58AU | Coax(Shield) | S/C, Wideband Data | 3.5.3 |

| Module | J# | Pin# | Signal Name | Signal Description | Wire Size (AWG) | Wire Type | Signal Type | ICD Para. Reference |
|---|---|---|---|---|---|---|---|---|
| 2A8 | J5 | 1 | | Unused | | | Internal | |
| 2A8 | J5 | 2 | 9V.SCAN.RTN.B | 9V Scan Return Side 2 (Not Used) | 20 | Single | Internal | |
| 2A8 | J5 | 3 | +11V.TLM.B | +11V Telemetry Supply Side 2 (VT11PB) | 24 | Single | Internal | |
| 2A8 | J5 | 4 | +18V.FW2 | +18V Filter Wheel Supply Side 2(VF18PB) | 24 | Single | Internal | |
| 2A8 | J5 | 5 | +9V.SCAN.B | +9V Scan Supply Side 2 (V9PB) | 20 | Single | Internal | |
| 2A8 | J5 | 6 | +7V2.SRV.B | +7V2 Scan Supply Side 2 (V7PYB) | 20 | Single | Internal | |
| 2A8 | J5 | 7 | -8V.TLM.B | -8V Telemetry Supply Side 2 (VT8MB) | 24 | Single | Internal | |
| 2A8 | J5 | 8 | -9V.SCAN.B | -9V Scan Supply Side 2 (V9MB) | 20 | Single | Internal | |
| 2A8 | J5 | 9 | RESERVED | Reserved | | | Internal | |
| 2A8 | J5 | 10 | +40V.TLM.B | +40V Telemetry Supply Side 2 (VT40PB) | 26 | Single | Internal | |
| 2A8 | J5 | 11 | RESERVED | Reserved | | | Internal | |
| 2A8 | J5 | 12 | | Unused | | | Internal | |
| 2A8 | J5 | 13 | | Unused | | | Internal | |
| 2A8 | J5 | 14 | T.WBF | Instr Telem Filter Wheel Side 2 OFF (T.WBF) | 26 | Single | Internal | |
| 2A8 | J5 | 15 | | Unused | | | Internal | |
| 2A8 | J5 | 16 | PS.SYNC(2) | 200 KHZ Power Supply Sync Side 2 (Sync2) | 26 | TS(16,33) | Internal | |
| 2A8 | J5 | 17 | KEY | Key | | | Internal | |
| 2A8 | J5 | 18 | KEY | Key | | | Internal | |
| 2A8 | J5 | 19 | +7V1.SRV.B | +7V1 Scan Supply Side 2 (V7PXB) | 20 | Single | Internal | |
| 2A8 | J5 | 20 | +17V.TLM.B | +17V Telemetry Supply Side 2 (VT17PB) | 24 | Single | Internal | |
| 2A8 | J5 | 21 | +17V.ELEC.B | +17V Electronics Supply Side 2 (V17PB) | 20 | Single | Internal | |
| 2A8 | J5 | 22 | +8V2.ELEC.B | +8V2 Electronics Supply Side 2 (V8PYB) | 20 | Single | Internal | |
| 2A8 | J5 | 23 | FW.PWR.GND | Filter Wheel Power Return Side 2 (P.RTN) | 24 | Single | Internal | |
| 2A8 | J5 | 24 | -17V.ELEC.B | -17V Electronics Supply Side 2 (V17MB) | 20 | Single | Internal | |
| 2A8 | J5 | 25 | -8V.ELEC.B | -8V Electronics Supply Side 2 (V8MB) | 20 | Single | Internal | |
| 2A8 | J5 | 26 | RESERVED | Reserved | | | Internal | |
| 2A8 | J5 | 27 | RESERVED | Reserved | | | Internal | |
| 2A8 | J5 | 28 | | Unused | | | Internal | |
| 2A8 | J5 | 29 | | Unused | | | Internal | |
| 2A8 | J5 | 30 | | Unused | | | Internal | |
| 2A8 | J5 | 31 | POS.I.SENSE | Positive Instrument Current Sense (PIS) | 26 | Single | Internal | |
| 2A8 | J5 | 32 | | Unused | | | Internal | |
| 2A8 | J5 | 33 | PS.SYNC.RTN(2) | Power Supply Sync Return Side 2 (SyncR2) | 26 | TS(16,33) | Internal | |
| 2A8 | J5 | 34 | GROUND | Electronics Power Return (P.RTN) | 20 | Single | Internal | |
| 2A8 | J5 | 35 | +8V1.ELEC.B | +8V1 Electronics Supply Side 2 (V8PXB) | 20 | Single | Internal | |
| 2A8 | J5 | 36 | +25V.MOT.B | +25V Scan Motor Side 2 (V25PB) | 24 | T(36,40) | Internal | |
| 2A8 | J5 | 37 | +12V.ELEC.B | +12V Electronics Supply Side 2 (V12PB) | 20 | Single | Internal | |
| 2A8 | J5 | 38 | +8V.ELEC.B | +8V3 Electronics Supply Side 2 (V8PZB) | 20 | Single | Internal | |
| 2A8 | J5 | 39 | | Unused | | | Internal | |
| 2A8 | J5 | 40 | -25V.MOT.B | -25V Scan Motor Side 2 (V25MB) | 24 | T(36,40) | Internal | |
| 2A8 | J5 | 41 | T.RTNB | Electronics Power Return (P.RTN) | 20 | Single | Internal | |
| 2A8 | J5 | 42 | | Unused | | | Internal | |
| 2A8 | J5 | 43 | | Unused | | | Internal | |
| 2A8 | J5 | 44 | | Unused | | | Internal | |
| 2A8 | J5 | 45 | | Unused | | | Internal | |
| 2A8 | J5 | 46 | T.RTN | Telemetry Return From Sense Sensors (T.RTN) | 20 | Single | Internal | |
| 2A8 | J5 | 47 | NEG.I.SENSE | Negative Instrument Current Sense (NIS) | 26 | Single | Internal | |
| 2A8 | J5 | 48 | | Unused | | | Internal | |
| 2A8 | J5 | 49 | | Unused | | | Internal | |
| 2A8 | J5 | 50 | | Unused | | | Internal | |

| Module | J# | Pin# | Signal Name | Signal Description | Wire Size (AWG) | Wire Type | Signal Type | ICD Para. Reference |
|---|---|---|---|---|---|---|---|---|
| 2A8 | J6 | 1 | LWPA.ECAL1.A | Longwave Preamp Electronic Cal 1 Side 1 | 26 | Single | Internal | |
| 2A8 | J6 | 2 | +10V.REF.#1 | +10V Reference #1 | 26 | Single | Internal | |
| 2A8 | J6 | 3 | LW.WEB1.#1 | Longwave Web 1 #1 | 26 | Single | Internal | |
| 2A8 | J6 | 4 | | Unused | | | Internal | |
| 2A8 | J6 | 5 | +10V.REF.#2 | +10V Reference #2 | 26 | Single | Internal | |
| 2A8 | J6 | 6 | LW.WEB2.#2 | Longwave Web 2 #2 | 26 | Single | Internal | |
| 2A8 | J6 | 7 | | Unused | | | Internal | |
| 2A8 | J6 | 8 | +10V.REF.#3 | +10V Reference #3 | 26 | Single | Internal | |
| 2A8 | J6 | 9 | LW.WEB1.#3 | Longwave Web 1 #3 | 26 | Single | Internal | |
| 2A8 | J6 | 10 | | Unused | | | Internal | |
| 2A8 | J6 | 11 | +10V.REF.#4 | +10V Reference #4 | 26 | Single | Internal | |
| 2A8 | J6 | 12 | LW.WEB2.#4 | Longwave Web 2 #4 | 26 | Single | Internal | |
| 2A8 | J6 | 13 | GROUND | Electronics Module Ground | 24 | Single | Internal | |
| 2A8 | J6 | 14 | LWPA.ECAL2.A | Longwave Preamp Electronic Cal 2 Side 1 | 26 | Single | Internal | |
| 2A8 | J6 | 15 | MWPA.ECAL1.B | Midwave Preamp Electronic Cal 1 Side 2 | 26 | Single | Internal | |
| 2A8 | J6 | 16 | MWPA.ECAL2.B | Midwave Preamp Electronic Cal 2 Side 2 | 26 | Single | Internal | |
| 2A8 | J6 | 17 | LWPA.ECAL1.B | Longwave Preamp Electronic Cal 1 Side 2 | 26 | Single | Internal | |
| 2A8 | J6 | 18 | KEY | Key | | | Internal | |
| 2A8 | J6 | 19 | +10VAB.#1 | +10VAB #1 | 26 | Single | Internal | |
| 2A8 | J6 | 20 | | Unused | | | Internal | |
| 2A8 | J6 | 21 | SW.WEB1.#1 | Shortwave Web 1 #1 | 26 | Single | Internal | |
| 2A8 | J6 | 22 | +10VAB.#2 | +10VAB #2 | 26 | Single | Internal | |
| 2A8 | J6 | 23 | | Unused | | | Internal | |
| 2A8 | J6 | 24 | SW.WEB2.#2 | Shortwave Web 2 #2 | 26 | Single | Internal | |
| 2A8 | J6 | 25 | +10VAB.#3 | +10VAB #3 | 26 | Single | Internal | |
| 2A8 | J6 | 26 | | Unused | | | Internal | |
| 2A8 | J6 | 27 | SW.WEB1.#3 | Shortwave Web 1 #3 | 26 | Single | Internal | |
| 2A8 | J6 | 28 | +10VAB.#4 | +10VAB #4 | 26 | Single | Internal | |
| 2A8 | J6 | 29 | | Unused | | | Internal | |
| 2A8 | J6 | 30 | SW.WEB2.#4 | Shortwave Web 2 #4 | 26 | Single | Internal | |
| 2A8 | J6 | 31 | LWPA.ECAL2.B | Longwave Preamp Electronic Cal 2 Side 2 | 26 | Single | Internal | |
| 2A8 | J6 | 32 | SWPA.ECAL1.A | Shortwave Preamp Electronic Cal 1 Side 1 | 26 | Single | Internal | |
| 2A8 | J6 | 33 | KEY | Key | | | Internal | |
| 2A8 | J6 | 34 | SWPA.ECAL2.A | Shortwave Preamp Electronic Cal 2 Side 1 | 26 | Single | Internal | |
| 2A8 | J6 | 35 | +15VAB.BIAS.#1 | +15VAB Bias #1 | 26 | Single | Internal | |
| 2A8 | J6 | 36 | MW.WEB1.#1 | Midwave Web 1 #1 | 26 | Single | Internal | |
| 2A8 | J6 | 37 | | Unused | | | Internal | |
| 2A8 | J6 | 38 | +15VAB.BIAS.#2 | +15VAB Bias #2 | 26 | Single | Internal | |
| 2A8 | J6 | 39 | MW.WEB2.#2 | Midwave Web 2 #2 | 26 | Single | Internal | |
| 2A8 | J6 | 40 | | Unused | | | Internal | |
| 2A8 | J6 | 41 | +15VAB.BIAS.#3 | +15VAB Bias #3 | 26 | Single | Internal | |
| 2A8 | J6 | 42 | MW.WEB1.#3 | Midwave Web 1 #3 | 26 | Single | Internal | |
| 2A8 | J6 | 43 | | Unused | | | Internal | |
| 2A8 | J6 | 44 | +15VAB.BIAS.#4 | +15VAB Bias #4 | 26 | Single | Internal | |
| 2A8 | J6 | 45 | MW.WEB2.#4 | Midwave Web 2 #4 | 26 | Single | Internal | |
| 2A8 | J6 | 46 | GROUND | Electronics Module Ground | 24 | Single | Internal | |
| 2A8 | J6 | 47 | MWPA.ECAL1.A | Midwave Preamp Electronic Cal 1 Side 1 | 26 | Single | Internal | |
| 2A8 | J6 | 48 | SWPA.ECAL1.B | Shortwave Preamp Electronic Cal 1 Side 2 | 26 | Single | Internal | |
| 2A8 | J6 | 49 | MWPA.ECAL2.A | Midwave Preamp Electronic Cal 2 Side 1 | 26 | Single | Internal | |
| 2A8 | J6 | 50 | SWPA.ECAL2.B | Shortwave Preamp Electronic Cal 2 Side 2 | 26 | Single | Internal | |

| Module | J# | Pin# | Signal Name | Signal Description | Wire Size (AWG) | Wire Type | Signal Type | ICD Para. Reference |
|---|---|---|---|---|---|---|---|---|
| 2A8 | J7 | 1 | KEY | Key | | | Internal | |
| 2A8 | J7 | 2 | BSPLT.1.THERM | Sensor Assy Baseplate Thermistor #1 | 24 | Single | Internal | |
| 2A8 | J7 | 3 | BSPLT.2.THERM | Sensor Assy Baseplate Thermistor #2 | 24 | Single | Internal | |
| 2A8 | J7 | 4 | BSPLT.3.THERM | Sensor Assy Baseplate Thermistor #3 | 24 | Single | Internal | |
| 2A8 | J7 | 5 | BSPLT.4.THERM | Sensor Assy Baseplate Thermistor #4 | 24 | Single | Internal | |
| 2A8 | J7 | 6 | BSPLT.5.THERM | Sensor Assy Baseplate Thermistor #5 | 24 | Single | Internal | |
| 2A8 | J7 | 7 | BSPLT.6.THERM | Sensor Assy Baseplate Thermistor #6 | 24 | Single | Internal | |
| 2A8 | J7 | 8 | B.B.#1.THERM | Blackbody Target Thermistor #1 | 24 | Single | Internal | |
| 2A8 | J7 | 9 | B.B.#2.THERM | Blackbody Target Thermistor #2 | 24 | Single | Internal | |
| 2A8 | J7 | 10 | B.B.#3.THERM | Blackbody Target Thermistor #3 | 24 | Single | Internal | |
| 2A8 | J7 | 11 | B.B.#4.THERM | Blackbody Target Thermistor #4 | 24 | Single | Internal | |
| 2A8 | J7 | 12 | B.B.#5.THERM | Blackbody Target Thermistor #5 | 24 | Single | Internal | |
| 2A8 | J7 | 13 | B.B.#6.THERM | Blackbody Target Thermistor #6 | 24 | Single | Internal | |
| 2A8 | J7 | 14 | B.B.#7.THERM | Blackbody Target Thermistor #7 | 24 | Single | Internal | |
| 2A8 | J7 | 15 | B.B.#8.THERM | Blackbody Target Thermistor #8 | 24 | Single | Internal | |
| 2A8 | J7 | 16 | KEY | Key | | | Internal | |
| 2A8 | J7 | 17 | TEL.PRI.THERM | Telescope Primary Thermistor | 24 | Single | Internal | |
| 2A8 | J7 | 18 | TEL.SEC.THERM | Telescope Secondary Thermistor #1 | 24 | Single | Internal | |
| 2A8 | J7 | 19 | TEL.SEC.THERM2 | Telescope Secondary Thermistor #2 | 24 | Single | Internal | |
| 2A8 | J7 | 20 | BAF.PRI.PRT1 | Primary Baffle Thermistor #1 | 24 | Single | Internal | |
| 2A8 | J7 | 21 | BAF.PRI.PRT2 | Primary Baffle Thermistor #2 | 24 | Single | Internal | |
| 2A8 | J7 | 22 | SCAN.MIR.THERM | Scan Mirror Thermistor | 24 | Single | Internal | |
| 2A8 | J7 | 23 | AFT.OPT.THERM | AFT Optics Thermistor | 24 | Single | Internal | |
| 2A8 | J7 | 24 | LVR.RAD.THERM | Louver Radiator Thermistor | 24 | Single | Internal | |
| 2A8 | J7 | 25 | CLR.HSG.PRT | Cooler Housing Thermistor | 24 | Single | Internal | |
| 2A8 | J7 | 26 | CLR.RAD.PRT | Cooler Radiator Thermistor | 24 | Single | Internal | |
| 2A8 | J7 | 27 | WR.PATCH.PRT | Wide Range Patch Thermistor | 24 | Single | Internal | |
| 2A8 | J7 | 28 | DIV.HRBUS.VOLT | Heater Bus +43V Telemetry | 26 | Single | Internal | |
| 2A8 | J7 | 29 | BSP1.ON.SC.BAR | Thermal Control No 1 ON/OFF Status | 26 | Single | Internal | |
| 2A8 | J7 | 30 | BSP2.ON.SC.BAR | Thermal Control No 2 ON/OFF Status | 26 | Single | Internal | |
| 2A8 | J7 | 31 | +SENSE.A | Thermal Control Current #1 | 26 | Single | Internal | |
| 2A8 | J7 | 32 | +SENSE.B | Thermal Control Current #2 | 26 | Single | Internal | |
| 2A8 | J7 | 33 | +SENSE.C | Thermal Control Current #3 | 26 | Single | Internal | |
| 2A8 | J7 | 34 | +SENSE.D | Thermal Control Current #4 | 26 | Single | Internal | |
| 2A8 | J7 | 35 | +SENSE.E | Thermal Control Current #5 | 26 | Single | Internal | |
| 2A8 | J7 | 36 | +SENSE.F | Thermal Control Current #6 | 26 | Single | Internal | |
| 2A8 | J7 | 37 | -SENSE | Thermal Control Current Return | 26 | Single | Internal | |
| 2A8 | J7 | 38 | BSP1.LO.SC | Thermal Control HIGH/LOW Select Status | 26 | Single | Internal | |
| 2A8 | J7 | 39 | RCOG.LO.SC | Cooler Outgas HIGH/LOW Select Status | 26 | Single | Internal | |
| 2A8 | J7 | 40 | RCOG.ON.SC.BAR | Cooler Outgas ON/OFF Status | 26 | Single | Internal | |
| 2A8 | J7 | 41 | PTCH.HTR.RN.EB | Patch Control Heater Return | 26 | Single | Internal | |
| 2A8 | J7 | 42 | GROUND | Electronics Module Ground | 24 | Single | Internal | |
| 2A8 | J7 | 43 | FW.MOTOR.THERM | Filter Wheel Motor Thermistor | 24 | Single | Internal | |
| 2A8 | J7 | 44 | FW.RAD.PRT | Filter Wheel Radiator Thermistor | 24 | Single | Internal | |
| 2A8 | J7 | 45 | FW.HSG.PRT | Filter Wheel Housing Thermistor | 24 | Single | Internal | |
| 2A8 | J7 | 46 | FWCNT.SC.BAR | Filter Wheel Control ON/OFF Status | 26 | Single | Internal | |
| 2A8 | J7 | 47 | COMPOSIT.A | Composite A | 26 | Single | Internal | |
| 2A8 | J7 | 48 | COMPOSIT.B | Composite B | 26 | Single | Internal | |
| 2A8 | J7 | 49 | FW.MOTOR1.C | Filter Wheel Motor Current #1 | 26 | Single | Internal | |
| 2A8 | J7 | 50 | FW.MOTOR2.C | Filter Wheel Motor Current #2 | 26 | Single | Internal | |

| Module | J# | Pin# | Signal Name | Signal Description | Wire Size (AWG) | Wire Type | Signal Type | ICD Para. Reference |
|---|---|---|---|---|---|---|---|---|
| 2A8 | J8 | 1 | KEY | Key | | | S/C | |
| 2A8 | J8 | 2 | -25VSRV.VOLT | -25V Servo | 26 | Single | S/C, Analog Telemetry | 3.5.2.2 |
| 2A8 | J8 | 3 | +8VSRV.VOLT | +9V Servo | 26 | Single | S/C, Analog Telemetry | 3.5.2.2 |
| 2A8 | J8 | 4 | -8VSRV.VOLT | -9V Servo | 26 | Single | S/C, Analog Telemetry | 3.5.2.2 |
| 2A8 | J8 | 5 | +7V1SRV.VOLT | +7V1 Servo | 26 | Single | S/C, Analog Telemetry | 3.5.2.2 |
| 2A8 | J8 | 6 | +7V2SRV.VOLT | +7V2 Servo | 26 | Single | S/C, Analog Telemetry | 3.5.2.2 |
| 2A8 | J8 | 7 | +17VTLM.VOLT | +17V Telemetry | 26 | Single | S/C, Analog Telemetry | 3.5.2.2 |
| 2A8 | J8 | 8 | +11VTLM.VOLT | +11V Telemetry | 26 | Single | S/C, Analog Telemetry | 3.5.2.2 |
| 2A8 | J8 | 9 | -8VTLM.VOLT | -8V Telemetry | 26 | Single | S/C, Analog Telemetry | 3.5.2.2 |
| 2A8 | J8 | 10 | +10V.REF.VOLT | Reference Voltage +10V #1 | 26 | T(10,11) | S/C | |
| 2A8 | J8 | 11 | GROUND | Reference Voltage +10V #1 Return | 26 | T(10,11) | S/C | |
| 2A8 | J8 | 12 | EW.ADMERR.A | E-W Scan Servo Error to ADM Side 1 | 26 | T(12,13) | S/C, Servo Error Telemetry | 3.5.2.3 |
| 2A8 | J8 | 13 | EW.ADMERR.RN.A | E-W Scan Servo Error to ADM Return Side 1 | 26 | T(12,13) | S/C, Servo Error Telemetry | 3.5.2.3 |
| 2A8 | J8 | 14 | EW.ADMERR.B | E-W Scan Servo Error to ADM Side 2 | 26 | T(14,15) | S/C, Servo Error Telemetry | 3.5.2.3 |
| 2A8 | J8 | 15 | EW.ADMERR.RN.B | E-W Scan Servo Error to ADM Return Side 2 | 26 | T(14,15) | S/C, Servo Error Telemetry | 3.5.2.3 |
| 2A8 | J8 | 16 | | Unused | | | S/C | |
| 2A8 | J8 | 17 | KEY | Key | | | S/C | |
| 2A8 | J8 | 18 | NS.ADMERR.A | N-S Scan Servo Error to ADM Side 1 | 26 | T(18,19) | S/C, Servo Error Telemetry | 3.5.2.3 |
| 2A8 | J8 | 19 | NS.ADMERR.RN.A | N-S Scan Servo Error to ADM Return Side 1 | 26 | T(18,19) | S/C, Servo Error Telemetry | 3.5.2.3 |
| 2A8 | J8 | 20 | NS.ADMERR.B | N-S Scan Servo Error to ADM Side 2 | 26 | T(20,21) | S/C, Servo Error Telemetry | 3.5.2.3 |
| 2A8 | J8 | 21 | NS.ADMERR.RN.B | N-S Scan Servo Error to ADM Return Side 2 | 26 | T(20,21) | S/C, Servo Error Telemetry | 3.5.2.3 |
| 2A8 | J8 | 22 | FW.MOTOR.CUR | Filter Wheel Motor Current | 26 | Single | S/C, Analog Telemetry | 3.5.2.2 |
| 2A8 | J8 | 23 | FW.HTR.VOLT | Filter Wheel Control Heater Voltage | 26 | Single | S/C, Analog Telemetry | 3.5.2.2 |
| 2A8 | J8 | 24 | TLM.BB | Blackbody Calibrate In Progress Status | 26 | Single | S/C, Transistor Bi-Level Telemetry | 3.5.2.1 |
| 2A8 | J8 | 25 | TLM.CAL.STAT | Blackbody Calibrate Status | 26 | Single | S/C, Transistor Bi-Level Telemetry | 3.5.2.1 |
| 2A8 | J8 | 26 | TLM.CMD.CLKING | Command Receipt Incomplete Status | 26 | Single | S/C, Transistor Bi-Level Telemetry | 3.5.2.1 |
| 2A8 | J8 | 27 | TLM.ELECT.ON | Sounder Electronics Status | 26 | Single | S/C, Transistor Bi-Level Telemetry | 3.5.2.1 |
| 2A8 | J8 | 28 | TLM.ACTV.SCAN | Frame Scan Status | 26 | Single | S/C, Transistor Bi-Level Telemetry | 3.5.2.1 |
| 2A8 | J8 | 29 | TLM.PRI.SCAN | Priority Frame Status | 26 | Single | S/C, Transistor Bi-Level Telemetry | 3.5.2.1 |
| 2A8 | J8 | 30 | TLM.SCAN.RST | Scan Reset Status | 26 | Single | S/C, Transistor Bi-Level Telemetry | 3.5.2.1 |
| 2A8 | J8 | 31 | TLM.SP | Space Look In Progress Status | 26 | Single | S/C, Transistor Bi-Level Telemetry | 3.5.2.1 |
| 2A8 | J8 | 32 | TLM.SS.STAT | Star Sense Status | 26 | Single | S/C, Transistor Bi-Level Telemetry | 3.5.2.1 |
| 2A8 | J8 | 33 | TLM.MODE.0 | Dwell Time Select Status Bit 1 | 26 | Single | S/C, Transistor Bi-Level Telemetry | 3.5.2.1 |
| 2A8 | J8 | 34 | TLM.MODE.1 | Dwell Time Select Status Bit 2 | 26 | Single | S/C, Transistor Bi-Level Telemetry | 3.5.2.1 |
| 2A8 | J8 | 35 | TLM.CMD.VALID | Command Transfer Suspended | 26 | Single | S/C, Transistor Bi-Level Telemetry | 3.5.2.1 |
| 2A8 | J8 | 36 | BIAS.ON.SC | Bias Power Status | 26 | Single | S/C, Relay Bi-Level Telemetry | 3.5.2.1 |
| 2A8 | J8 | 37 | PTCH.CON.TMP.S | Patch Control Temp Select | 26 | Single | S/C, Relay Bi-Level Telemetry | 3.5.2.1 |
| 2A8 | J8 | 38 | PTCH.CON.STAT | Patch Control Status | 26 | Single | S/C, Relay Bi-Level Telemetry | 3.5.2.1 |
| 2A8 | J8 | 39 | TLM.SPACE.EAST | Space Look | 26 | Single | S/C, Relay Bi-Level Telemetry | 3.5.2.1 |
| 2A8 | J8 | 40 | NS.SC.8MR.A | IMC Range Select Status | 26 | Single | S/C, Relay Bi-Level Telemetry | 3.5.2.1 |
| 2A8 | J8 | 41 | | Unused | | | S/C, Relay Bi-Level Telemetry | 3.5.2.1 |
| 2A8 | J8 | 42 | TLM.RTN | Bi-Level Telemetry Return #1 | 26 | Single | S/C, Relay Bi-Level Telemetry | 3.5.2.1 |
| 2A8 | J8 | 43 | TLM.RTN | Bi-Level Telemetry Return #2 | 26 | Single | S/C, Relay Bi-Level Telemetry | 3.5.2.1 |
| 2A8 | J8 | 44 | TLM.RTN | Bi-Level Telemetry Return #3 | 26 | Single | S/C, Relay Bi-Level Telemetry | 3.5.2.1 |
| 2A8 | J8 | 45 | GROUND | Analog Telemetry Return #1 | 24 | Single | S/C, Analog Telemetry | 3.5.2.2 |
| 2A8 | J8 | 46 | GROUND | Analog Telemetry Return #2 | 24 | Single | S/C, Analog Telemetry | 3.5.2.2 |
| 2A8 | J8 | 47 | GROUND | Analog Telemetry Return #3 | 24 | Single | S/C, Analog Telemetry | 3.5.2.2 |
| 2A8 | J8 | 48 | GROUND | Analog Telemetry Return #4 | 24 | Single | S/C, Analog Telemetry | 3.5.2.2 |
| 2A8 | J8 | 49 | GROUND | Analog Telemetry Return #5 | 24 | Single | S/C, Analog Telemetry | 3.5.2.2 |
| 2A8 | J8 | 50 | GROUND | Analog Telemetry Return #6 | 24 | Single | S/C, Analog Telemetry | 3.5.2.2 |

| Module | J# | Pin# | Signal Name | Signal Description | Wire Size (AWG) | Wire Type | Signal Type | ICD Para. Reference |
|---|---|---|---|---|---|---|---|---|
| 2A8 | J9 | 1 | KEY | Key | | | S/C | |
| 2A8 | J9 | 2 | ELEC.1.TEMP | Electronics Temp #1 | 26 | Single | S/C, Analog Telemetry | 3.5.2.2 |
| 2A8 | J9 | 3 | ELEC.2.TEMP | Electronics Temp #2 | 26 | Single | S/C, Analog Telemetry | 3.5.2.2 |
| 2A8 | J9 | 4 | BSPLT.1.TEMP | Sensor Assy Baseplate Temp #1 | 26 | T(4,5) | S/C, Analog Telemetry | 3.5.2.2 |
| 2A8 | J9 | 5 | GROUND | Sensor Assy Baseplate Temp #1 Return | 26 | T(4,5) | S/C, Analog Telemetry | 3.5.2.2 |
| 2A8 | J9 | 6 | B.B.#1&5.TEMP | Blackbody Target Temp 1 or 5 | 26 | T(6,7) | S/C, Analog Telemetry | 3.5.2.2 |
| 2A8 | J9 | 7 | GROUND | Blackbody Target Temp 1 or 5 Return | 26 | T(6,7) | S/C, Analog Telemetry | 3.5.2.2 |
| 2A8 | J9 | 8 | B.B.#2&6.TEMP | Blackbody Target Temp 2 or 6 | 26 | T(8,9) | S/C, Analog Telemetry | 3.5.2.2 |
| 2A8 | J9 | 9 | GROUND | Blackbody Target Temp 2 or 6 Return | 26 | T(8,9) | S/C, Analog Telemetry | 3.5.2.2 |
| 2A8 | J9 | 10 | B.B.#3&7.TEMP | Blackbody Target Temp 3 or 7 | 26 | T(10,11) | S/C, Analog Telemetry | 3.5.2.2 |
| 2A8 | J9 | 11 | GROUND | Blackbody Target Temp 3 or 7 Return | 26 | T(10,11) | S/C, Analog Telemetry | 3.5.2.2 |
| 2A8 | J9 | 12 | B.B.#4&8.TEMP | Blackbody Target Temp 4 or 8 | 26 | T(12,13) | S/C, Analog Telemetry | 3.5.2.2 |
| 2A8 | J9 | 13 | GROUND | Blackbody Target Temp 4 or 8 Return | 26 | T(12,13) | S/C, Analog Telemetry | 3.5.2.2 |
| 2A8 | J9 | 14 | TEL.PRI.TEMP | Telescope Primary Temp | 26 | T(14,15) | S/C, Analog Telemetry | 3.5.2.2 |
| 2A8 | J9 | 15 | GROUND | Telescope Primary Temp Return | 26 | T(14,15) | S/C, Analog Telemetry | 3.5.2.2 |
| 2A8 | J9 | 16 | TEL.SEC.1.TEMP | Telescope Secondary Temp #1 | 26 | T(16,17) | S/C, Analog Telemetry | 3.5.2.2 |
| 2A8 | J9 | 17 | GROUND | Telescope Secondary Temp #1 Return | 26 | T(16,17) | S/C, Analog Telemetry | 3.5.2.2 |
| 2A8 | J9 | 18 | TEL.SEC.2.TEMP | Telescope Secondary Temp #2 | 26 | T(18,19) | S/C, Analog Telemetry | 3.5.2.2 |
| 2A8 | J9 | 19 | GROUND | Telescope Secondary Temp #2 Return | 26 | T(18,19) | S/C, Analog Telemetry | 3.5.2.2 |
| 2A8 | J9 | 20 | TEL.SEC.3.TEMP | Telescope Secondary Temp #3 | 26 | T(20,21) | S/C, Analog Telemetry | 3.5.2.2 |
| 2A8 | J9 | 21 | GROUND | Telescope Secondary Temp #3 Return | 26 | T(20,21) | S/C, Analog Telemetry | 3.5.2.2 |
| 2A8 | J9 | 22 | SCAN.MIR.TEMP | Scan Mirror Temp | 26 | T(22,23) | S/C, Analog Telemetry | 3.5.2.2 |
| 2A8 | J9 | 23 | GROUND | Scan Mirror Temp Return | 26 | T(22,23) | S/C, Analog Telemetry | 3.5.2.2 |
| 2A8 | J9 | 24 | AFT.OPT.TEMP | AFT Optics Temp | 26 | T(24,25) | S/C, Analog Telemetry | 3.5.2.2 |
| 2A8 | J9 | 25 | GROUND | AFT Optics Temp Return | 26 | T(24,25) | S/C, Analog Telemetry | 3.5.2.2 |
| 2A8 | J9 | 26 | LVR.RAD.TEMP | Louver Radiator Temp | 26 | T(26,27) | S/C, Analog Telemetry | 3.5.2.2 |
| 2A8 | J9 | 27 | GROUND | Louver Radiator Temp Return | 26 | T(26,27) | S/C, Analog Telemetry | 3.5.2.2 |
| 2A8 | J9 | 28 | CLR.HSG.TEMP | Cooler Housing Temp | 26 | Single | S/C, Analog Telemetry | 3.5.2.2 |
| 2A8 | J9 | 29 | CLR.RAD.TEMP | Cooler Radiator Temp | 26 | Single | S/C, Analog Telemetry | 3.5.2.2 |
| 2A8 | J9 | 30 | NR.PATCH.TEMP | Narrow Range IR Detector Temp | 26 | T(30,31) | S/C, Analog Telemetry | 3.5.2.2 |
| 2A8 | J9 | 31 | GROUND | Narrow Range IR Detector Temp Return | 26 | T(30,31) | S/C, Analog Telemetry | 3.5.2.2 |
| 2A8 | J9 | 32 | KEY | Key | | | S/C | |
| 2A8 | J9 | 33 | WR.PATCH.TEMP | Wide Range IR Detector Temp | 26 | Single | S/C, Analog Telemetry | 3.5.2.2 |
| 2A8 | J9 | 34 | FW.HSG.TEMP | Filter Wheel Housing Temp | 26 | Single | S/C, Analog Telemetry | 3.5.2.2 |
| 2A8 | J9 | 35 | FW.MOTOR.TEMP | Filter Wheel Motor Temp | 26 | Single | S/C, Analog Telemetry | 3.5.2.2 |
| 2A8 | J9 | 36 | FW.RAD.TEMP | Filter Wheel Radiator Temp | 26 | Single | S/C, Analog Telemetry | 3.5.2.2 |
| 2A8 | J9 | 37 | PWR.SPLY.TEMP | Power Supply Temp | 26 | Single | S/C, Analog Telemetry | 3.5.2.2 |
| 2A8 | J9 | 38 | PATCH.CNT.VOLT | Patch Control Voltage | 26 | T(38,39) | S/C, Analog Telemetry | 3.5.2.2 |
| 2A8 | J9 | 39 | GROUND | Patch Control Voltage Return | 26 | T(38,39) | S/C, Analog Telemetry | 3.5.2.2 |
| 2A8 | J9 | 40 | EW.SERVO.CUR | E-W Scan Servo Current | 26 | Single | S/C, Analog Telemetry | 3.5.2.2 |
| 2A8 | J9 | 41 | NS.SERVO.CUR | N-S Scan Servo Current | 26 | Single | S/C, Analog Telemetry | 3.5.2.2 |
| 2A8 | J9 | 42 | INSTR.CRNT | Sounder Instrument Current | 26 | Single | S/C, Analog Telemetry | 3.5.2.2 |
| 2A8 | J9 | 43 | +17VELEC.VOLT | +17V Electronics | 26 | Single | S/C, Analog Telemetry | 3.5.2.2 |
| 2A8 | J9 | 44 | -17VELEC.VOLT | -17V Electronics | 26 | Single | S/C, Analog Telemetry | 3.5.2.2 |
| 2A8 | J9 | 45 | +8V1ELEC.VOLT | +8V1 Electronics | 26 | Single | S/C, Analog Telemetry | 3.5.2.2 |
| 2A8 | J9 | 46 | +8V2ELEC.VOLT | +8V2 Electronics | 26 | Single | S/C, Analog Telemetry | 3.5.2.2 |
| 2A8 | J9 | 47 | +8VELEC.VOLT | +8V3 Electronics | 26 | Single | S/C, Analog Telemetry | 3.5.2.2 |
| 2A8 | J9 | 48 | -8VELEC.VOLT | -8V Electronics | 26 | Single | S/C, Analog Telemetry | 3.5.2.2 |
| 2A8 | J9 | 49 | +12VELEC.VOLT | -12V Electronics | 26 | Single | S/C, Analog Telemetry | 3.5.2.2 |
| 2A8 | J9 | 50 | +25VSRV.VOLT | +25V Servo | 26 | Single | S/C, Analog Telemetry | 3.5.2.2 |

| Module | J# | Pin# | Signal Name | Signal Description | Wire Size (AWG) | Wire Type | Signal Type | ICD Para. Reference |
|---|---|---|---|---|---|---|---|---|
| 2A8 | J10 | 1 | RESERVED | Reserved | | | Internal | |
| 2A8 | J10 | 2 | KEY | Key | | | Internal | |
| 2A8 | J10 | 3 | LW1.VIDEO.+ | Longwave Video + Channel 1 | 26 | TS(3,4) | Internal | |
| 2A8 | J10 | 4 | LW1.VIDEO.- | Longwave Video - Channel 1 | 26 | TS(3,4) | Internal | |
| 2A8 | J10 | 5 | LW4.VIDEO.+ | Longwave Video + Channel 4 | 26 | TS(5,6) | Internal | |
| 2A8 | J10 | 6 | LW4.VIDEO.- | Longwave Video - Channel 4 | 26 | TS(5,6) | Internal | |
| 2A8 | J10 | 7 | MW3.VIDEO.+ | Midwave Video + Channel 3 | 26 | TS(7,8) | Internal | |
| 2A8 | J10 | 8 | MW3.VIDEO.- | Midwave Video - Channel 3 | 26 | TS(7,8) | Internal | |
| 2A8 | J10 | 9 | SW2.VIDEO.+ | Shortwave Video + Channel 2 | 26 | TS(9,10) | Internal | |
| 2A8 | J10 | 10 | SW2.VIDEO.- | Shortwave Video - Channel 2 | 26 | TS(9,10) | Internal | |
| 2A8 | J10 | 11 | SHIELD3 | Shield 3 | 26 | SSC(11,12)(11,13) | Internal | |
| 2A8 | J10 | 12 | STAR3.VIDEO | Star Sense Video Channel 3 | 26 | SSC(11,12) | Internal | |
| 2A8 | J10 | 13 | STAR6.VIDEO | Star Sense Video Channel 6 | 26 | SSC(11,13) | Internal | |
| 2A8 | J10 | 14 | VIS1.VIDEO | Visible Video Channel 1 | 26 | SSC(14,16) | Internal | |
| 2A8 | J10 | 15 | VIS4.VIDEO | Visible Video Channel 4 | 26 | SSC(15,16) | Internal | |
| 2A8 | J10 | 16 | SHIELD4 | Shield 4 | 26 | SSC(14,16)(15,16) | Internal | |
| 2A8 | J10 | 17 | FW.HTR.A.V | Filter Wheel Control Heater Voltage #1 | 26 | Single | Internal | |
| 2A8 | J10 | 18 | RESERVED | Reserved | | | Internal | |
| 2A8 | J10 | 19 | LW2.VIDEO.- | Longwave Video - Channel 2 | 26 | TS(19,20) | Internal | |
| 2A8 | J10 | 20 | LW2.VIDEO.+ | Longwave Video + Channel 2 | 26 | TS(19,20) | Internal | |
| 2A8 | J10 | 21 | MW1.VIDEO.- | Midwave Video - Channel 1 | 26 | TS(21,22) | Internal | |
| 2A8 | J10 | 22 | MW1.VIDEO.+ | Midwave Video + Channel 1 | 26 | TS(21,22) | Internal | |
| 2A8 | J10 | 23 | MW4.VIDEO.- | Midwave Video - Channel 4 | 26 | TS(23,24) | Internal | |
| 2A8 | J10 | 24 | MW4.VIDEO.+ | Midwave Video + Channel 4 | 26 | TS(23,24) | Internal | |
| 2A8 | J10 | 25 | SW3.VIDEO.- | Shortwave Video - Channel 3 | 26 | TS(25,26) | Internal | |
| 2A8 | J10 | 26 | SW3.VIDEO.+ | Shortwave Video + Channel 3 | 26 | TS(25,26) | Internal | |
| 2A8 | J10 | 27 | SHIELD1 | Shield 1 | 26 | SSC(27,28)(27,29) | Internal | |
| 2A8 | J10 | 28 | STAR1.VIDEO | Star Sense Video Channel 1 | 26 | SSC(27,28) | Internal | |
| 2A8 | J10 | 29 | STAR4.VIDEO | Star Sense Video Channel 4 | 26 | SSC(27,29) | Internal | |
| 2A8 | J10 | 30 | STAR7.VIDEO | Star Sense Video Channel 7 | 26 | SSC(30,32) | Internal | |
| 2A8 | J10 | 31 | VIS2.VIDEO | Visible Video Channel 2 | 26 | SSC(31,32) | Internal | |
| 2A8 | J10 | 32 | SHIELD6 | Shield 6 | 26 | SSC(30,32)(31,32) | Internal | |
| 2A8 | J10 | 33 | FW.HTR.B.V | Filter Wheel Control Heater Voltage #2 | 26 | Single | Internal | |
| 2A8 | J10 | 34 | RESERVED | Reserved | | | Internal | |
| 2A8 | J10 | 35 | LW3.VIDEO.+ | Longwave Video + Channel 3 | 26 | TS(35,36) | Internal | |
| 2A8 | J10 | 36 | LW3.VIDEO.- | Longwave Video - Channel 3 | 26 | TS(35,36) | Internal | |
| 2A8 | J10 | 37 | MW2.VIDEO.+ | Midwave Video + Channel 2 | 26 | TS(37,38) | Internal | |
| 2A8 | J10 | 38 | MW2.VIDEO.- | Midwave Video - Channel 2 | 26 | TS(37,38) | Internal | |
| 2A8 | J10 | 39 | SW1.VIDEO.+ | Shortwave Video + Channel 1 | 26 | TS(39,40) | Internal | |
| 2A8 | J10 | 40 | SW1.VIDEO.- | Shortwave Video - Channel 1 | 26 | TS(39,40) | Internal | |
| 2A8 | J10 | 41 | SW4.VIDEO.+ | Shortwave Video + Channel 4 | 26 | TS(41,42) | Internal | |
| 2A8 | J10 | 42 | SW4.VIDEO.- | Shortwave Video - Channel 4 | 26 | TS(41,42) | Internal | |
| 2A8 | J10 | 43 | SHIELD2 | Shield 2 | 26 | SSC(43,44)(43,45) | Internal | |
| 2A8 | J10 | 44 | STAR2.VIDEO | Star Sense Video Channel 2 | 26 | SSC(43,44) | Internal | |
| 2A8 | J10 | 45 | STAR5.VIDEO | Star Sense Video Channel 5 | 26 | SSC(43,45) | Internal | |
| 2A8 | J10 | 46 | STAR8.VIDEO | Star Sense Video Channel 8 | 26 | SSC(46,48) | Internal | |
| 2A8 | J10 | 47 | VIS3.VIDEO | Visible Video Channel 3 | 26 | SSC(47,48) | Internal | |
| 2A8 | J10 | 48 | SHIELD5 | Shield 5 | 26 | SSC(46,48)(47,48) | Internal | |
| 2A8 | J10 | 49 | KEY | Key | | | Internal | |
| 2A8 | J10 | 50 | FWOG1.SC.BAR | Filter Wheel Outgas ON/OFF Status | 26 | Single | Internal | |

| Module | J# | Pin# | Signal Name | Signal Description | Wire Size (AWG) | Wire Type | Signal Type | ICD Para. Reference |
|---|---|---|---|---|---|---|---|---|
| 2A8 | J11 | 1 | | Unused | | | Internal | |
| 2A8 | J11 | 2 | KEY | Key | | | Internal | |
| 2A8 | J11 | 3 | | Unused | | | Internal | |
| 2A8 | J11 | 4 | | Unused | | | Internal | |
| 2A8 | J11 | 5 | | Unused | | | Internal | |
| 2A8 | J11 | 6 | -3V.REF.TEMP1 | -3V Thermistor Ref #1 | 24 | Single | Internal | |
| 2A8 | J11 | 7 | -3V.REF.TEMP1 | -3V Thermistor Ref #1 | 24 | Single | Internal | |
| 2A8 | J11 | 8 | -3V.REF.TEMP2 | -3V Thermistor Ref #2 | 24 | Single | Internal | |
| 2A8 | J11 | 9 | -3V.REF.TEMP2 | -3V Thermistor Ref #2 | 24 | Single | Internal | |
| 2A8 | J11 | 10 | -3V.REF.TEMP3 | -3V Thermistor Ref #3 | 24 | Single | Internal | |
| 2A8 | J11 | 11 | -3V.REF.TEMP3 | -3V Thermistor Ref #3 | 24 | Single | Internal | |
| 2A8 | J11 | 12 | BCL(SIDE1) | Filter Wheel Clock Instrument Side 1 | 26 | Single | Internal | |
| 2A8 | J11 | 13 | BCL(SIDE2) | Filter Wheel Clock Instrument Side 2 | 26 | Single | Internal | |
| 2A8 | J11 | 14 | +10VA | +10V Instrument Side 1 | 26 | Single | Internal | |
| 2A8 | J11 | 15 | +10VB | +10V Instrument Side 2 | 26 | Single | Internal | |
| 2A8 | J11 | 16 | AZC.A* | Auto Zero Clamp Side 1 Active LOW | 26 | Single | Internal | |
| 2A8 | J11 | 17 | AZC.B* | Auto Zero Clamp Side 2 Active LOW | 26 | Single | Internal | |
| 2A8 | J11 | 18 | +6.2VA | +6.2V Instrument Side 1 | 26 | Single | Internal | |
| 2A8 | J11 | 19 | +6.2VB | +6.2V Instrument Side 2 | 26 | Single | Internal | |
| 2A8 | J11 | 20 | +6.2VAB.#1 | +6.2VAB #1 | 26 | Single | S/C, Visible & Star +6.2V | 3.5.5.3 |
| 2A8 | J11 | 21 | +6.2VAB.#2 | +6.2VAB #2 | 26 | Single | S/C, Visible & Star +6.2V | 3.5.5.3 |
| 2A8 | J11 | 22 | +6.2VAB.#3 | +6.2VAB #3 | 26 | Single | S/C, Visible & Star +6.2V | 3.5.5.3 |
| 2A8 | J11 | 23 | +6.2VAB.#4 | +6.2VAB #4 | 26 | Single | S/C, Visible & Star +6.2V | 3.5.5.3 |
| 2A8 | J11 | 24 | -6.2VAB.#1 | -6.2VAB #1 | 26 | Single | Internal | |
| 2A8 | J11 | 25 | -6.2VAB.#2 | -6.2VAB #2 | 26 | Single | Internal | |
| 2A8 | J11 | 26 | -6.2VAB.#3 | -6.2VAB #3 | 26 | Single | Internal | |
| 2A8 | J11 | 27 | -6.2VAB.#4 | -6.2VAB #4 | 26 | Single | Internal | |
| 2A8 | J11 | 28 | ELEC.CAL.#1 | Electronic Calibration #1 | 26 | Single | Internal | |
| 2A8 | J11 | 29 | ELEC.CAL.#2 | Electronic Calibration #2 | 26 | Single | Internal | |
| 2A8 | J11 | 30 | ELEC.CAL.#3 | Electronic Calibration #3 | 26 | Single | Internal | |
| 2A8 | J11 | 31 | ELEC.CAL.#4 | Electronic Calibration #4 | 26 | Single | Internal | |
| 2A8 | J11 | 32 | | Unused | | | Internal | |
| 2A8 | J11 | 33 | KEY | Key | | | Internal | |
| 2A8 | J11 | 34 | | Unused | | | Internal | |
| 2A8 | J11 | 35 | | Unused | | | Internal | |
| 2A8 | J11 | 36 | +6.2VTLM#1.CL | +6.2V Telemetry Current Limited #1 | 26 | Single | Internal | |
| 2A8 | J11 | 37 | +6.2VTLM#2.CL | +6.2V Telemetry Current Limited #2 | 26 | Single | Internal | |
| 2A8 | J11 | 38 | -6.2VTLM#1.CL | -6.2V Telemetry Current Limited #1 | 26 | Single | Internal | |
| 2A8 | J11 | 39 | -6.2VTLM#2.CL | -6.2V Telemetry Current Limited #2 | 26 | Single | Internal | |
| 2A8 | J11 | 40 | +15VTLM.A | +15V Telemetry Instrument Side 1 | 24 | Single | Internal | |
| 2A8 | J11 | 41 | +15VTLM.B | +15V Telemetry Instrument Side 2 | 24 | Single | Internal | |
| 2A8 | J11 | 42 | | Unused | | | Internal | |
| 2A8 | J11 | 43 | | Unused | | | Internal | |
| 2A8 | J11 | 44 | | Unused | | | Internal | |
| 2A8 | J11 | 45 | | Unused | | | Internal | |
| 2A8 | J11 | 46 | | Unused | | | Internal | |
| 2A8 | J11 | 47 | GROUND | Electronics Module Ground | 24 | Single | Internal | |
| 2A8 | J11 | 48 | GROUND | Electronics Module Ground | 24 | Single | Internal | |
| 2A8 | J11 | 49 | GROUND | Electronics Module Ground | 24 | Single | Internal | |
| 2A8 | J11 | 50 | GROUND | Electronics Module Ground | 24 | Single | Internal | |

| Module | J# | Pin# | Signal Name | Signal Description | Wire Size (AWG) | Wire Type | Signal Type | ICD Para. Reference |
|---|---|---|---|---|---|---|---|---|
| 2A8 | J12 | 1 | KEY | Key | | | Internal | |
| 2A8 | J12 | 2 | 9V.SCAN.RTN.A | 9V Scan Return Side 1 (Not Used) | 20 | Single | Internal | |
| 2A8 | J12 | 3 | +11V.TLM.A | +11V Telemetry Supply Side 1 (VT11PA) | 24 | Single | Internal | |
| 2A8 | J12 | 4 | +18V.FW1 | +18V Filter Wheel Supply Side 1(VF18PA) | 24 | Single | Internal | |
| 2A8 | J12 | 5 | +9V.SCAN.A | +9V Scan Supply Side 1 (V9PA) | 20 | Single | Internal | |
| 2A8 | J12 | 6 | +7V2.SRV.A | +7V2 Scan Supply Side 1 (V7PYA) | 20 | Single | Internal | |
| 2A8 | J12 | 7 | -8V.TLM.A | -8V Telemetry Supply Side 1 (VT8MA) | 24 | Single | Internal | |
| 2A8 | J12 | 8 | -9V.SCAN.A | -9V Scan Supply Side 1 (V9MA) | 20 | Single | Internal | |
| 2A8 | J12 | 9 | RESERVED | Reserved | | | Internal | |
| 2A8 | J12 | 10 | +40V.TLM.A | +40V Telem Supply Patch Htr Side 1 (VT40PA) | 26 | Single | Internal | |
| 2A8 | J12 | 11 | RESERVED | Reserved | | | Internal | |
| 2A8 | J12 | 12 | | Unused | | | Internal | |
| 2A8 | J12 | 13 | | Unused | | | Internal | |
| 2A8 | J12 | 14 | T.WAF | Instr Telem Filter Wheel Side 1 OFF (T.WAF) | 26 | Single | Internal | |
| 2A8 | J12 | 15 | | Unused | | | Internal | |
| 2A8 | J12 | 16 | PS.SYNC(1) | 200 KHZ Power Supply Sync Side 1 (Sync1) | 26 | TS(16,33) | Internal | |
| 2A8 | J12 | 17 | | Unused | | | Internal | |
| 2A8 | J12 | 18 | | Unused | | | Internal | |
| 2A8 | J12 | 19 | +7V1.SRV.A | +7V1 Scan Supply Side 1 (V7PXA) | 20 | Single | Internal | |
| 2A8 | J12 | 20 | +17V.TLM.A | +17V Telemetry Supply Side 1 (VT17PA) | 24 | Single | Internal | |
| 2A8 | J12 | 21 | +17V.ELEC.A | +17V Electronics Supply Side 1 (V17PA) | 20 | Single | Internal | |
| 2A8 | J12 | 22 | +8V2.ELEC.A | +8V2 Electronics Supply Side 1 (V8PYA) | 20 | Single | Internal | |
| 2A8 | J12 | 23 | FW.PWR.GND | Filter Wheel Return Side 1 (P.RTN) | 24 | Single | Internal | |
| 2A8 | J12 | 24 | -17V.ELEC.A | -17V Electronics Supply Side 1 (V17MA) | 20 | Single | Internal | |
| 2A8 | J12 | 25 | -8V.ELEC.A | -8V Electronics Supply Side 1 (V8MA) | 20 | Single | Internal | |
| 2A8 | J12 | 26 | RESERVED | Reserved | | | Internal | |
| 2A8 | J12 | 27 | RESERVED | Reserved | | | Internal | |
| 2A8 | J12 | 28 | | Unused | | | Internal | |
| 2A8 | J12 | 29 | | Unused | | | Internal | |
| 2A8 | J12 | 30 | | Unused | | | Internal | |
| 2A8 | J12 | 31 | PS.THERM | Power Supply Thermistor (PS.THM) | 24 | Single | Internal | |
| 2A8 | J12 | 32 | | Unused | | | Internal | |
| 2A8 | J12 | 33 | PS.SYNC.RTN(1) | Power Supply Sync Return Side 1 (SyncR1) | 26 | TS(16,33) | Internal | |
| 2A8 | J12 | 34 | GROUND | Electronics Power Return (P.RTN) | 20 | Single | Internal | |
| 2A8 | J12 | 35 | +8V1.ELEC.A | +8V1 Electronics Supply Side 1 (V8PXA) | 20 | Single | Internal | |
| 2A8 | J12 | 36 | +25V.MOT.A | +25V Scan Motor Side 1 (V25PA) | 24 | TS(36,40) | Internal | |
| 2A8 | J12 | 37 | +12V.ELEC.A | +12V Electronics Supply Side 1 (V12PA) | 20 | Single | Internal | |
| 2A8 | J12 | 38 | +8V.ELEC.A | +8V3 Electronics Supply Side 1 (V8PZA) | 20 | Single | Internal | |
| 2A8 | J12 | 39 | | Unused | | | Internal | |
| 2A8 | J12 | 40 | -25V.MOT.A | -25V Scan Motor Side 1 (V25MA) | 24 | TS(36,40) | Internal | |
| 2A8 | J12 | 41 | T.RTNA | Electronics Power Return (P.RTN) | 20 | Single | Internal | |
| 2A8 | J12 | 42 | | Unused | | | Internal | |
| 2A8 | J12 | 43 | | Unused | | | Internal | |
| 2A8 | J12 | 44 | | Unused | | | Internal | |
| 2A8 | J12 | 45 | | Unused | | | Internal | |
| 2A8 | J12 | 46 | T.RTN | Telemetry Return From Sense Sensors (T.RTN) | 20 | Single | Internal | |
| 2A8 | J12 | 47 | -3V.REF.TEMP1 | -3V Thermistor Ref. No.1 (THM.RTN) | 26 | Single | Internal | |
| 2A8 | J12 | 48 | | Unused | | | Internal | |
| 2A8 | J12 | 49 | | Unused | | | Internal | |
| 2A8 | J12 | 50 | KEY | Key | | | Internal | |

| Module | J# | Pin# | Signal Name | Signal Description | Wire Size (AWG) | Wire Type | Signal Type | ICD Para. Reference |
|---|---|---|---|---|---|---|---|---|
| 2A8 | J13 | 1 | WB.SDATA.A | Wideband Serial Data Side 1 | RG58AU | Coax(Center) | S/C, Wideband Data | 3.5.3 |
| 2A8 | J13 | 2 | WB.SDATA.SLD.A | Wideband Serial Data Return Side 1 | RG58AU | Coax(Shield) | S/C, Wideband Data | 3.5.3 |

| Module | J# | Pin# | Signal Name | Signal Description | Wire Size (AWG) | Wire Type | Signal Type | ICD Para. Reference |
|---|---|---|---|---|---|---|---|---|
| 2A8 | J14 | 1 | KEY | Key | | | S/C | |
| 2A8 | J14 | 2 | DAT.RDY.CU1.A | Proportional Command Data Ready Side 1 | 26 | Single | S/C, Proportional Command | 3.5.1.3 |
| 2A8 | J14 | 3 | DAT.RDY.CU1.B | Proportional Command Data Ready Side 2 | 26 | Single | S/C, Proportional Command | 3.5.1.3 |
| 2A8 | J14 | 4 | SC.CLOCK.CU1.A | Proportional Command Strobe Side 1 | 26 | Single | S/C, Proportional Command | 3.5.1.3 |
| 2A8 | J14 | 5 | SC.CLOCK.CU1.B | Proportional Command Strobe Side 2 | 26 | Single | S/C, Proportional Command | 3.5.1.3 |
| 2A8 | J14 | 6 | SC.DATA.CU1.A | Proportional Command Data Side 1 | 26 | Single | S/C, Proportional Command | 3.5.1.3 |
| 2A8 | J14 | 7 | SC.DATA.CU1.B | Proportional Command Data Side 2 | 26 | Single | S/C, Proportional Command | 3.5.1.3 |
| 2A8 | J14 | 8 | GROUND | Proportional Command Return | 24 | Single | S/C, Proportional Command | 3.5.1.3 |
| 2A8 | J14 | 9 | IR.CAL.EN.CU1 | Auto B.B. Calibrate Enable | 26 | Single | S/C, Pulse Command | 3.5.1.2 |
| 2A8 | J14 | 10 | IR.CAL.DIS.CU1 | Auto B.B. Calibrate Inhibit | 26 | Single | S/C, Pulse Command | 3.5.1.2 |
| 2A8 | J14 | 11 | CU1.PTCH.ON.LO | Patch Temp Control ON LOW | 26 | Single | S/C, Pulse Command | 3.5.1.2 |
| 2A8 | J14 | 12 | CU1.PTCH.HIGH | Patch Temp HIGH Select | 26 | Single | S/C, Pulse Command | 3.5.1.2 |
| 2A8 | J14 | 13 | CU1.PTCH.OFF | Patch Temp Control OFF | 26 | Single | S/C, Pulse Command | 3.5.1.2 |
| 2A8 | J14 | 14 | SPC.LOOK.E.CU1 | Space Look EAST | 26 | Single | S/C, Pulse Command | 3.5.1.2 |
| 2A8 | J14 | 15 | SPC.LOOK.W.CU1 | Space Look WEST | 26 | Single | S/C, Pulse Command | 3.5.1.2 |
| 2A8 | J14 | 16 | SCAN.RESET.CU1 | Scan Reset | 26 | Single | S/C, Pulse Command | 3.5.1.2 |
| 2A8 | J14 | 17 | NORM.FR.ST.CU1 | Normal Frame Start | 26 | Single | S/C, Pulse Command | 3.5.1.2 |
| 2A8 | J14 | 18 | PTY1.FR.ST.CU1 | Priority 1 Frame Start | 26 | Single | S/C, Pulse Command | 3.5.1.2 |
| 2A8 | J14 | 19 | PTY2.FR.ST.CU1 | Priority 2 Frame Start | 26 | Single | S/C, Pulse Command | 3.5.1.2 |
| 2A8 | J14 | 20 | STAR.FR.ST.CU1 | Star Frame Start | 26 | Single | S/C, Pulse Command | 3.5.1.2 |
| 2A8 | J14 | 21 | BIAS.CU1.ON | Detector Bias ON | 26 | Single | S/C, Pulse Command | 3.5.1.2 |
| 2A8 | J14 | 22 | BIAS.CU1.OFF | Detector Bias OFF | 26 | Single | S/C, Pulse Command | 3.5.1.2 |
| 2A8 | J14 | 23 | IMC1.RNGSEL.HI | IMC Range Select HIGH | 26 | Single | S/C, Pulse Command | 3.5.1.2 |
| 2A8 | J14 | 24 | IMC1.RNGSEL.LO | IMC Range Select LOW | 26 | Single | S/C, Pulse Command | 3.5.1.2 |
| 2A8 | J14 | 25 | | Unused | | | S/C | |
| 2A8 | J14 | 26 | CMD.RELAY.RTN | Cmd Unit 1 Return | 24 | Single | S/C, Pulse Command | 3.5.1.2 |
| 2A8 | J14 | 27 | CMD.RELAY.RTN | Cmd Unit 1 Return | 24 | Single | S/C, Pulse Command | 3.5.1.2 |
| 2A8 | J14 | 28 | CHASSIS GROUND | Chassis Ground | 26 | Single | S/C, | 3.5.3 |
| 2A8 | J14 | 29 | WB.SDATA.SLD.A | Wideband Coax Shield Side 1 | 26 | Single | S/C, | 3.5.3 |
| 2A8 | J14 | 30 | | Unused | | | S/C, Pulse Command | 3.5.1.2 |
| 2A8 | J14 | 31 | | Unused | | | S/C | |
| 2A8 | J14 | 32 | | Unused | | | S/C | |
| 2A8 | J14 | 33 | | Unused | | | S/C | |
| 2A8 | J14 | 34 | | Unused | | | S/C | |
| 2A8 | J14 | 35 | | Unused | | | S/C | |
| 2A8 | J14 | 36 | | Unused | | | S/C | |
| 2A8 | J14 | 37 | | Unused | | | S/C | |
| 2A8 | J14 | 38 | | Unused | | | S/C | |
| 2A8 | J14 | 39 | | Unused | | | S/C | |
| 2A8 | J14 | 40 | | Unused | | | S/C | |
| 2A8 | J14 | 41 | | Unused | | | S/C | |
| 2A8 | J14 | 42 | | Unused | | | S/C | |
| 2A8 | J14 | 43 | | Unused | | | S/C | |
| 2A8 | J14 | 44 | | Unused | | | S/C | |
| 2A8 | J14 | 45 | | Unused | | | S/C | |
| 2A8 | J14 | 46 | | Unused | | | S/C | |
| 2A8 | J14 | 47 | | Unused | | | S/C | |
| 2A8 | J14 | 48 | | Unused | | | S/C | |
| 2A8 | J14 | 49 | KEY | Key | | | S/C | |
| 2A8 | J14 | 50 | | Unused | | | S/C | |

| Module | J# | Pin# | Signal Name | Signal Description | Wire Size (AWG) | Wire Type | Signal Type | ICD Para. Reference |
|---|---|---|---|---|---|---|---|---|
| 2A8 | J15 | 1 | KEY | Key | | | S/C | |
| 2A8 | J15 | 2 | AOCE.SEL.A | IMC Side Select Instrument Side 1 | 26 | Single | S/C, Image Motion Compensation | 3.5.4.2 |
| 2A8 | J15 | 3 | AOCE.SEL.B | IMC Side Select Instrument Side 2 | 26 | Single | S/C, Image Motion Compensation | 3.5.4.2 |
| 2A8 | J15 | 4 | GROUND | IMC Side Select Return Inst Side 1 | 26 | Single | S/C, Image Motion Compensation | 3.5.4.2 |
| 2A8 | J15 | 5 | GROUND | IMC Side Select Return Inst Side 2 | 26 | Single | S/C, Image Motion Compensation | 3.5.4.2 |
| 2A8 | J15 | 6 | EW.IMC1 | E-W Scan Compensation INR Side 1 | 26 | TS(6,7) | S/C, Image Motion Compensation | 3.5.4.2 |
| 2A8 | J15 | 7 | EW.IMC1.RTN | E-W Scan Compensation Return INR Side 1 | 26 | TS(6,7) | S/C, Image Motion Compensation | 3.5.4.2 |
| 2A8 | J15 | 8 | EW.IMC2 | E-W Scan Compensation INR Side 2 | 26 | TS(8,9) | S/C, Image Motion Compensation | 3.5.4.2 |
| 2A8 | J15 | 9 | EW.IMC2.RTN | E-W Scan Compensation Return INR Side 2 | 26 | TS(8,9) | S/C, Image Motion Compensation | 3.5.4.2 |
| 2A8 | J15 | 10 | NS.IMC1 | N-S Scan Compensation INR Side 1 | 26 | TS(10,11) | S/C, Image Motion Compensation | 3.5.4.2 |
| 2A8 | J15 | 11 | NS.IMC1.RTN | N-S Scan Compensation Return INR Side 1 | 26 | TS(10,11) | S/C, Image Motion Compensation | 3.5.4.2 |
| 2A8 | J15 | 12 | NS.IMC2 | N-S Scan Compensation INR Side 2 | 26 | TS(12,13) | S/C, Image Motion Compensation | 3.5.4.2 |
| 2A8 | J15 | 13 | NS.IMC2.RTN | N-S Scan Compensation Return INR Side 2 | 26 | TS(12,13) | S/C, Image Motion Compensation | 3.5.4.2 |
| 2A8 | J15 | 14 | AOCE.EW.DIR.A | E-W Direction Instrument Side 1 | 26 | Single | S/C, Scan Status | 3.5.4.4 |
| 2A8 | J15 | 15 | AOCE.EW.DIR.B | E-W Direction Instrument Side 2 | 26 | Single | S/C, Scan Status | 3.5.4.4 |
| 2A8 | J15 | 16 | AOCE.EW.SLEW.A | E-W Scan/No Scan Instrument Side 1 | 26 | Single | S/C, Scan Status | 3.5.4.4 |
| 2A8 | J15 | 17 | AOCE.EW.SLEW.B | E-W Scan/No Scan Instrument Side 2 | 26 | Single | S/C, Scan Status | 3.5.4.4 |
| 2A8 | J15 | 18 | AOCE.NS.DIR.A | N-S Direction Instrument Side 1 | 26 | Single | S/C, Scan Status | 3.5.4.4 |
| 2A8 | J15 | 19 | AOCE.NS.DIR.B | N-S Direction Instrument Side 2 | 26 | Single | S/C, Scan Status | 3.5.4.4 |
| 2A8 | J15 | 20 | AOCE.NS.SLEW.A | N-S Scan/No Scan Instrument Side 1 | 26 | Single | S/C, Scan Status | 3.5.4.4 |
| 2A8 | J15 | 21 | AOCE.NS.SLEW.B | N-S Scan/No Scan Instrument Side 2 | 26 | Single | S/C, Scan Status | 3.5.4.4 |
| 2A8 | J15 | 22 | MIR.POS.RQ1.A | Mirror Position Request Flag INR 1 Inst 1 | 26 | Single | S/C, Mirror Position | 3.5.4.3 |
| 2A8 | J15 | 23 | MIR.POS.RQ1.B | Mirror Position Request Flag INR 1 Inst 2 | 26 | Single | S/C, Mirror Position | 3.5.4.3 |
| 2A8 | J15 | 24 | MIR.POS.RQ2.A | Mirror Position Request Flag INR 2 Inst 1 | 26 | Single | S/C, Mirror Position | 3.5.4.3 |
| 2A8 | J15 | 25 | MIR.POS.RQ2.B | Mirror Position Request Flag INR 2 Inst 2 | 26 | Single | S/C, Mirror Position | 3.5.4.3 |
| 2A8 | J15 | 26 | MIR.POS.ST1.A | Mirror Position Request Strobe INR 1 Inst 1 | 26 | Single | S/C, Mirror Position | 3.5.4.3 |
| 2A8 | J15 | 27 | MIR.POS.ST1.B | Mirror Position Request Strobe INR 1 Inst 2 | 26 | Single | S/C, Mirror Position | 3.5.4.3 |
| 2A8 | J15 | 28 | MIR.POS.ST2.A | Mirror Position Request Strobe INR 2 Inst 1 | 26 | Single | S/C, Mirror Position | 3.5.4.3 |
| 2A8 | J15 | 29 | MIR.POS.ST2.B | Mirror Position Request Strobe INR 2 Inst 2 | 26 | Single | S/C, Mirror Position | 3.5.4.3 |
| 2A8 | J15 | 30 | MIR.POS.DATA.A | Mirror Position Data INR Side 1 | 26 | Single | S/C, Mirror Position | 3.5.4.3 |
| 2A8 | J15 | 31 | MIR.POS.DATA.B | Mirror Position Data INR Side 2 | 26 | Single | S/C, Mirror Position | 3.5.4.3 |
| 2A8 | J15 | 32 | AOCE.FRAME.A | Frame/No Frame INR Side 1 | 26 | Single | S/C, Scan Status | 3.5.4.4 |
| 2A8 | J15 | 33 | KEY | Key | | | S/C | |
| 2A8 | J15 | 34 | AOCE.FRAME.B | Frame/No Frame INR Side 2 | 26 | Single | S/C, Scan Status | 3.5.4.4 |
| 2A8 | J15 | 35 | AOCE.STAR.A | Star/No Star INR Side 1 | 26 | Single | S/C, Scan Status | 3.5.4.4 |
| 2A8 | J15 | 36 | AOCE.STAR.B | Star/No Star INR Side 2 | 26 | Single | S/C, Scan Status | 3.5.4.4 |
| 2A8 | J15 | 37 | DATA1.A | Spacecraft Attitude Data INR 1 Inst 1 | 26 | Single | S/C, Attitude Data | 3.5.4.1 |
| 2A8 | J15 | 38 | DATA1.B | Spacecraft Attitude Data INR 1 Inst 2 | 26 | Single | S/C, Attitude Data | 3.5.4.1 |
| 2A8 | J15 | 39 | DATA2.A | Spacecraft Attitude Data INR 2 Inst 1 | 26 | Single | S/C, Attitude Data | 3.5.4.1 |
| 2A8 | J15 | 40 | DATA2.B | Spacecraft Attitude Data INR 2 Inst 2 | 26 | Single | S/C, Attitude Data | 3.5.4.1 |
| 2A8 | J15 | 41 | CL1.A | Spacecraft Attitude Clock INR 1 Inst 1 | 26 | Single | S/C, Attitude Data | 3.5.4.1 |
| 2A8 | J15 | 42 | CL1.B | Spacecraft Attitude Clock INR 1 Inst 2 | 26 | Single | S/C, Attitude Data | 3.5.4.1 |
| 2A8 | J15 | 43 | CL2.A | Spacecraft Attitude Clock INR 2 Inst 1 | 26 | Single | S/C, Attitude Data | 3.5.4.1 |
| 2A8 | J15 | 44 | CL2.B | Spacecraft Attitude Clock INR 2 Inst 2 | 26 | Single | S/C, Attitude Data | 3.5.4.1 |
| 2A8 | J15 | 45 | TIMING.GATE1.A | Spacecraft Attitude Timing Gate INR 1 Inst1 | 26 | Single | S/C, Attitude Data | 3.5.4.1 |
| 2A8 | J15 | 46 | TIMING.GATE1.B | Spacecraft Attitude Timing Gate INR 1 Inst2 | 26 | Single | S/C, Attitude Data | 3.5.4.1 |
| 2A8 | J15 | 47 | TIMING.GATE2.A | Spacecraft Attitude Timing Gate INR 2 Inst1 | 26 | Single | S/C, Attitude Data | 3.5.4.1 |
| 2A8 | J15 | 48 | TIMING.GATE2.B | Spacecraft Attitude Timing Gate INR 2 Inst2 | 26 | Single | S/C, Attitude Data | 3.5.4.1 |
| 2A8 | J15 | 49 | GROUND | INR Side 1 Return | 26 | Single | S/C, Attitude Data | 3.5.4.1 |
| 2A8 | J15 | 50 | GROUND | INR Side 2 Return | 24 | Single | S/C, Attitude Data | 3.5.4.1 |

| Module | J# | Pin# | Signal Name | Signal Description | Wire Size (AWG) | Wire Type | Signal Type | ICD Para. Reference |
|---|---|---|---|---|---|---|---|---|
| 2A8 | J16 | 1 | NS.MITLM.A | N-S Motor Current Telemetry Side 1 | 26 | TS(1,18) | Internal | |
| 2A8 | J16 | 2 | KEY | Key | | | Internal | |
| 2A8 | J16 | 3 | EW.X1.PO.B | E-W X1 Preamp Output Side 2 | 26 | TS(3,4,20) | Internal | |
| 2A8 | J16 | 4 | EW.X1.PO.RTN.B | E-W X1 Preamp Output Return Side 2 | 26 | TS(3,4,20) | Internal | |
| 2A8 | J16 | 5 | EW.X1.PO.A | E-W X1 Preamp Output Side 1 | 26 | TS(5,6,22) | Internal | |
| 2A8 | J16 | 6 | EW.X1.PO.RTN.A | E-W X1 Preamp Output Return Side 1 | 26 | TS(5,6,22) | Internal | |
| 2A8 | J16 | 7 | EW.MITLM.A | E-W Motor Current Telemetry Side 1 | 26 | TS(7,8) | Internal | |
| 2A8 | J16 | 8 | EW.MITLM.RTN.A | E-W Motor Current Telemetry Return Side 1 | 26 | TS(7,8) | Internal | |
| 2A8 | J16 | 9 | EW.MITLM.B | E-W Motor Current Telemetry Side 2 | 26 | TS(9,10) | Internal | |
| 2A8 | J16 | 10 | EW.MITLM.RTN.B | E-W Motor Current Telemetry Return Side 2 | 26 | TS(9,10) | Internal | |
| 2A8 | J16 | 11 | MOL.A | Motor Overload Side 1 | 26 | Single | S/C, Motor Overload | 3.5.5.2 |
| 2A8 | J16 | 12 | EW.X128.P.RN.B | E-W X128 Preamp Output Return Side 2 | 26 | TS(12,13,29) | Internal | |
| 2A8 | J16 | 13 | EW.X128.PO.B | E-W X128 Preamp Output Side 2 | 26 | TS(12,13,29) | Internal | |
| 2A8 | J16 | 14 | EW.X128.P.RN.A | E-W X128 Preamp Output Return Side 1 | 26 | TS(14,15,31) | Internal | |
| 2A8 | J16 | 15 | EW.X128.PO.A | E-W X128 Preamp Output Side 1 | 26 | TS(14,15,31) | Internal | |
| 2A8 | J16 | 16 | | Unused | | | Internal | |
| 2A8 | J16 | 17 | NS.MITLM.B | N-S Motor Current Telemetry Side 2 | 26 | TS(17,33) | Internal | |
| 2A8 | J16 | 18 | NS.MITLM.RTN.A | N-S Motor Current Telemetry Return Side 1 | 26 | TS(1,18) | Internal | |
| 2A8 | J16 | 19 | | Unused | | | Internal | |
| 2A8 | J16 | 20 | EW.X1.PO.SLD.B | E-W X1 Preamp Output Shield Side 2 | 26 | TS(3,4,20) | Internal | |
| 2A8 | J16 | 21 | NS.X1.PO.SLD.B | N-S X1 Preamp Output Shield Side 2 | 26 | TS(21,37,38) | Internal | |
| 2A8 | J16 | 22 | EW.X1.PO.SLD.A | E-W X1 Preamp Output Shield Side 1 | 26 | TS(5,6,22) | Internal | |
| 2A8 | J16 | 23 | NS.X1.PO.SLD.A | N-S X1 Preamp Output Shield Side 1 | 26 | TS(23,39,40) | Internal | |
| 2A8 | J16 | 24 | | Unused | | | Internal | |
| 2A8 | J16 | 25 | SCAN.V.ON.A | Scan Voltage ON Side 1 | 26 | Single | Internal | |
| 2A8 | J16 | 26 | | Unused | | | Internal | |
| 2A8 | J16 | 27 | MOL.B | Motor Overload Side 2 | 26 | Single | S/C, Motor Overload | 3.5.5.2 |
| 2A8 | J16 | 28 | NS.X128.P.SD.B | N-S X128 Preamp Output Shield Side 2 | 26 | TS(28,44,45) | Internal | |
| 2A8 | J16 | 29 | EW.X128.P.SD.B | E-W X128 Preamp Output Shield Side 2 | 26 | TS(12,13,29) | Internal | |
| 2A8 | J16 | 30 | NS.X128.P.SD.A | N-S X128 Preamp Output Shield Side 1 | 26 | TS(30,46,47) | Internal | |
| 2A8 | J16 | 31 | EW.X128.P.SD.A | E-W X128 Preamp Output Shield Side 1 | 26 | TS(14,15,31) | Internal | |
| 2A8 | J16 | 32 | | Unused | | | Internal | |
| 2A8 | J16 | 33 | NS.MITLM.RTN.B | N-S Motor Current Telemetry Return Side 2 | 26 | TS(17,33) | Internal | |
| 2A8 | J16 | 34 | | Unused | | | Internal | |
| 2A8 | J16 | 35 | *TEL.SEC.TMP3* | *Telescope Secondary Temp No.3* | *26* | *Single* | Internal | |
| 2A8 | J16 | 36 | | Unused | | | Internal | |
| 2A8 | J16 | 37 | NS.X1.PO.B | N-S X1 Preamp Output Side 2 | 26 | TS(21,37,38) | Internal | |
| 2A8 | J16 | 38 | NS.X1.PO.RTN.B | N-S X1 Preamp Output Return Side 2 | 26 | TS(21,37,38) | Internal | |
| 2A8 | J16 | 39 | NS.X1.PO.A | N-S X1 Preamp Output Side 1 | 26 | TS(23,39,40) | Internal | |
| 2A8 | J16 | 40 | NS.X1.PO.RTN.A | N-S X1 Preamp Output Return Side 1 | 26 | TS(23,39,40) | Internal | |
| 2A8 | J16 | 41 | SCAN.V.ON.B | Scan Voltage ON Side 2 | 26 | Single | Internal | |
| 2A8 | J16 | 42 | SCAN.A.NOT.UP | Scan Not Up Side 1 | 26 | Single | Internal | |
| 2A8 | J16 | 43 | SCAN.B.NOT.UP | Scan Not Up Side 2 | 26 | Single | Internal | |
| 2A8 | J16 | 44 | NS.X128.PO.B | N-S X128 Preamp Output Side 2 | 26 | TS(28,44,45) | Internal | |
| 2A8 | J16 | 45 | NS.X128.P.RN.B | N-S X128 Preamp Output Return Side 2 | 26 | TS(28,44,45) | Internal | |
| 2A8 | J16 | 46 | NS.X128.PO.A | N-S X128 Preamp Output Side 1 | 26 | TS(30,46,47) | Internal | |
| 2A8 | J16 | 47 | NS.X128.P.RN.A | N-S X128 Preamp Output Return Side 1 | 26 | TS(30,46,47) | Internal | |
| 2A8 | J16 | 48 | | Unused | | | Internal | |
| 2A8 | J16 | 49 | | Unused | | | Internal | |
| 2A8 | J16 | 50 | KEY | Key | | | Internal | |

| Module | J# | Pin# | Signal Name | Signal Description | Wire Size (AWG) | Wire Type | Signal Type | ICD Para. Reference |
|---|---|---|---|---|---|---|---|---|
| 2A8 | J17 | 1 | EW.IMC.S.TP.A | E-W IMC Select Test Side 1 | 26 | Single | Internal, Servo (Scan Comp) | 3.4.1.4 |
| 2A8 | J17 | 2 | KEY | Key | | | Internal | |
| 2A8 | J17 | 3 | EW.IMC.S.TP.B | E-W IMC Select Test Side 2 | 26 | Single | Internal, Servo (Scan Comp) | 3.4.1.4 |
| 2A8 | J17 | 4 | EW.FPCOMP.TP.A | E-W Fixed Pattern Compensation Test Side 1 | 26 | Single | Internal, Servo (Scan Comp) | 3.4.1.4 |
| 2A8 | J17 | 5 | EW.FPCOMP.TP.B | E-W Fixed Pattern Compensation Test Side 2 | 26 | Single | Internal, Servo (Scan Comp) | 3.4.1.4 |
| 2A8 | J17 | 6 | ORTHOG.TP.A | Orthoganality Test Side 1 | 26 | Single | Internal, Servo (Scan Comp) | 3.4.1.4 |
| 2A8 | J17 | 7 | ORTHOG.TP.B | Orthoganality Test Side 2 | 26 | Single | Internal, Servo (Scan Comp) | 3.4.1.4 |
| 2A8 | J17 | 8 | EW.DACO.TP.A | E-W DAC Output Test Side 1 | 26 | Single | Internal, Servo (Scan Comp) | 3.4.1.4 |
| 2A8 | J17 | 9 | EW.DACO.TP.B | E-W DAC Output Test Side 2 | 26 | Single | Internal, Servo (Scan Comp) | 3.4.1.4 |
| 2A8 | J17 | 10 | NS.IMC.S.TP.A | N-S IMC Select Test Side 1 | 26 | Single | Internal, Servo (Scan Comp) | 3.4.1.4 |
| 2A8 | J17 | 11 | NS.IMC.S.TP.B | N-S IMC Select Test Side 2 | 26 | Single | Internal, Servo (Scan Comp) | 3.4.1.4 |
| 2A8 | J17 | 12 | NS.FPCOMP.TP.A | N-S Fixed Pattern Compensation Test Side 1 | 26 | Single | Internal, Servo (Scan Comp) | 3.4.1.4 |
| 2A8 | J17 | 13 | NS.FPCOMP.TP.B | N-S Fixed Pattern Compensation Test Side 2 | 26 | Single | Internal, Servo (Scan Comp) | 3.4.1.4 |
| 2A8 | J17 | 14 | NS.DACO.TP.A | N-S DAC Output Test Side 1 | 26 | Single | Internal, Servo (Scan Comp) | 3.4.1.4 |
| 2A8 | J17 | 15 | NS.DACO.TP.B | N-S DAC Output Test Side 2 | 26 | Single | Internal, Servo (Scan Comp) | 3.4.1.4 |
| 2A8 | J17 | 16 | EW.CACL.TP.A | E-W Compensated Address Clock Test Side 1 | 26 | Single | Internal, Servo Clocks | 3.4.1.4 |
| 2A8 | J17 | 17 | EW.CACL.TP.B | E-W Compensated Address Clock Test Side 2 | 26 | Single | Internal, Servo Clocks | 3.4.1.4 |
| 2A8 | J17 | 18 | NS.CACL.TP.A | N-S Compensated Address Clock Test Side 1 | 26 | Single | Internal, Servo Clocks | 3.4.1.4 |
| 2A8 | J17 | 19 | NS.CACL.TP.B | N-S Compensated Address Clock Test Side 2 | 26 | Single | Internal, Servo Clocks | 3.4.1.4 |
| 2A8 | J17 | 20 | NS.CLK.TEST.A | N-S Clock Test Side 1 | 26 | Single | Internal, Servo Clocks | 3.4.1.4 |
| 2A8 | J17 | 21 | NS.CLK.TEST.B | N-S Clock Test Side 2 | 26 | Single | Internal, Servo Clocks | 3.4.1.4 |
| 2A8 | J17 | 22 | EW.CLK.TEST.A | E-W Clock Test Side 1 | 26 | Single | Internal, Servo Clocks | 3.4.1.4 |
| 2A8 | J17 | 23 | EW.CLK.TEST.B | E-W Clock Test Side 2 | 26 | Single | Internal, Servo Clocks | 3.4.1.4 |
| 2A8 | J17 | 24 | EW.TEST.IN.A | E-W Test Side 1 | 26 | TS(24,25) | Internal, Servo (For Bode Plots) | 3.4.1.4 |
| 2A8 | J17 | 25 | EW.TEST.RTN.A | E-W Test Return Side 1 | 26 | TS(24,25) | Internal, Servo (For Bode Plots) | 3.4.1.4 |
| 2A8 | J17 | 26 | EW.TEST.IN.B | E-W Test Side 2 | 26 | TS(26,27) | Internal, Servo (For Bode Plots) | 3.4.1.4 |
| 2A8 | J17 | 27 | EW.TEST.RTN.B | E-W Test Return Side 2 | 26 | TS(26,27) | Internal, Servo (For Bode Plots) | 3.4.1.4 |
| 2A8 | J17 | 28 | EW.TEST1.A | E-W Test 1 Side 1 | 26 | TS(28,29) | Internal, Servo (For Bode Plots) | 3.4.1.4 |
| 2A8 | J17 | 29 | EW.TEST1.RTN.A | E-W Test 1 Return Side 1 | 26 | TS(28,29) | Internal, Servo (For Bode Plots) | 3.4.1.4 |
| 2A8 | J17 | 30 | EW.TEST1.B | E-W Test 1 Side 2 | 26 | TS(30,31) | Internal, Servo (For Bode Plots) | 3.4.1.4 |
| 2A8 | J17 | 31 | EW.TEST1.RTN.B | E-W Test 1 Return Side 2 | 26 | TS(30,31) | Internal, Servo (For Bode Plots) | 3.4.1.4 |
| 2A8 | J17 | 32 | KEY | Key | | | Internal | |
| 2A8 | J17 | 33 | GROUND | Electronics Module Ground | 24 | Single | Internal, Servo | 3.4.1.4 |
| 2A8 | J17 | 34 | EW.TEST2.A | E-W Test 2 Side 1 | 26 | TS(34,35) | Internal, Servo (For Bode Plots) | 3.4.1.4 |
| 2A8 | J17 | 35 | EW.TEST2.RTN.A | E-W Test 2 Return Side 1 | 26 | TS(34,35) | Internal, Servo (For Bode Plots) | 3.4.1.4 |
| 2A8 | J17 | 36 | EW.TEST2.B | E-W Test 2 Side 2 | 26 | TS(36,37) | Internal, Servo (For Bode Plots) | 3.4.1.4 |
| 2A8 | J17 | 37 | EW.TEST2.RTN.B | E-W Test 2 Return Side 2 | 26 | TS(36,37) | Internal, Servo (For Bode Plots) | 3.4.1.4 |
| 2A8 | J17 | 38 | NS.TEST.IN.A | N-S Test Side 1 | 26 | TS(38,39) | Internal, Servo (For Bode Plots) | 3.4.1.4 |
| 2A8 | J17 | 39 | NS.TEST.RTN.A | N-S Test Return Side 1 | 26 | TS(38,39) | Internal, Servo (For Bode Plots) | 3.4.1.4 |
| 2A8 | J17 | 40 | NS.TEST.IN.B | N-S Test Side 2 | 26 | TS(40,41) | Internal, Servo (For Bode Plots) | 3.4.1.4 |
| 2A8 | J17 | 41 | NS.TEST.RTN.B | N-S Test Return Side 2 | 26 | TS(40,41) | Internal, Servo (For Bode Plots) | 3.4.1.4 |
| 2A8 | J17 | 42 | NS.TEST1.A | N-S Test 1 Side 1 | 26 | TS(42,43) | Internal, Servo (For Bode Plots) | 3.4.1.4 |
| 2A8 | J17 | 43 | NS.TEST1.RTN.A | N-S Test 1 Return Side 1 | 26 | TS(42,43) | Internal, Servo (For Bode Plots) | 3.4.1.4 |
| 2A8 | J17 | 44 | NS.TEST1.B | N-S Test 1 Side 2 | 26 | TS(44,45) | Internal, Servo (For Bode Plots) | 3.4.1.4 |
| 2A8 | J17 | 45 | NS.TEST1.RTN.B | N-S Test 1 Return Side 2 | 26 | TS(44,45) | Internal, Servo (For Bode Plots) | 3.4.1.4 |
| 2A8 | J17 | 46 | NS.TEST2.A | N-S Test 2 Side 1 | 26 | TS(46,47) | Internal, Servo (For Bode Plots) | 3.4.1.4 |
| 2A8 | J17 | 47 | NS.TEST2.RTN.A | N-S Test 2 Return Side 1 | 26 | TS(46,47) | Internal, Servo (For Bode Plots) | 3.4.1.4 |
| 2A8 | J17 | 48 | NS.TEST2.B | N-S Test 2 Side 2 | 26 | TS(48,49) | Internal, Servo (For Bode Plots) | 3.4.1.4 |
| 2A8 | J17 | 49 | NS.TEST2.RTN.B | N-S Test 2 Return Side 2 | 26 | TS(48,49) | Internal, Servo (For Bode Plots) | 3.4.1.4 |
| 2A8 | J17 | 50 | GROUND | Electronics Module Ground | 24 | Single | Internal, Servo | 3.4.1.4 |

| Module | J# | Pin# | Signal Name | Signal Description | Wire Size (AWG) | Wire Type | Signal Type | ICD Para. Reference |
|---|---|---|---|---|---|---|---|---|
| 2A8 | J18 | 1 | LW1.TP2 | Longwave 1 Test 2 | 26 | SSC | Internal, Video (LW) | 3.4.1.4 |
| 2A8 | J18 | 2 | KEY | Key | | | Internal | |
| 2A8 | J18 | 3 | LW1.TP13 | Longwave 1 Test 13 | 26 | SSC | Internal, Video (LW) | 3.4.1.4 |
| 2A8 | J18 | 4 | LW2.TP2 | Longwave 2 Test 2 | 26 | SSC | Internal, Video (LW) | 3.4.1.4 |
| 2A8 | J18 | 5 | LW2.TP13 | Longwave 2 Test 13 | 26 | SSC | Internal, Video (LW) | 3.4.1.4 |
| 2A8 | J18 | 6 | LW3.TP2 | Longwave 3 Test 2 | 26 | SSC | Internal, Video (LW) | 3.4.1.4 |
| 2A8 | J18 | 7 | LW3.TP13 | Longwave 3 Test 13 | 26 | SSC | Internal, Video (LW) | 3.4.1.4 |
| 2A8 | J18 | 8 | LW4.TP2 | Longwave 4 Test 2 | 26 | SSC | Internal, Video (LW) | 3.4.1.4 |
| 2A8 | J18 | 9 | LW4.TP13 | Longwave 4 Test 13 | 26 | SSC | Internal, Video (LW) | 3.4.1.4 |
| 2A8 | J18 | 10 | MW1.TP2 | Midwave 1 Test 2 | 26 | SSC | Internal, Video (MW) | 3.4.1.4 |
| 2A8 | J18 | 11 | MW1.TP13 | Midwave 1 Test 13 | 26 | SSC | Internal, Video (MW) | 3.4.1.4 |
| 2A8 | J18 | 12 | MW2.TP2 | Midwave 2 Test 2 | 26 | SSC | Internal, Video (MW) | 3.4.1.4 |
| 2A8 | J18 | 13 | MW2.TP13 | Midwave 2 Test 13 | 26 | SSC | Internal, Video (MW) | 3.4.1.4 |
| 2A8 | J18 | 14 | MW3.TP2 | Midwave 3 Test 2 | 26 | SSC | Internal, Video (MW) | 3.4.1.4 |
| 2A8 | J18 | 15 | MW3.TP13 | Midwave 3 Test 13 | 26 | SSC | Internal, Video (MW) | 3.4.1.4 |
| 2A8 | J18 | 16 | MW4.TP2 | Midwave 4 Test 2 | 26 | SSC | Internal, Video (MW) | 3.4.1.4 |
| 2A8 | J18 | 17 | KEY | Key | | | Internal | |
| 2A8 | J18 | 18 | MW4.TP13 | Midwave 4 Test 13 | 26 | SSC | Internal, Video (MW) | 3.4.1.4 |
| 2A8 | J18 | 19 | SW1.TP2 | Shortwave 1 Test 2 | 26 | SSC | Internal, Video (SW) | 3.4.1.4 |
| 2A8 | J18 | 20 | SW1.TP13 | Shortwave 1 Test 13 | 26 | SSC | Internal, Video (SW) | 3.4.1.4 |
| 2A8 | J18 | 21 | SW2.TP2 | Shortwave 2 Test 2 | 26 | SSC | Internal, Video (SW) | 3.4.1.4 |
| 2A8 | J18 | 22 | SW2.TP13 | Shortwave 2 Test 13 | 26 | SSC | Internal, Video (SW) | 3.4.1.4 |
| 2A8 | J18 | 23 | SW3.TP2 | Shortwave 3 Test 2 | 26 | SSC | Internal, Video (SW) | 3.4.1.4 |
| 2A8 | J18 | 24 | SW3.TP13 | Shortwave 3 Test 13 | 26 | SSC | Internal, Video (SW) | 3.4.1.4 |
| 2A8 | J18 | 25 | SW4.TP2 | Shortwave 4 Test 2 | 26 | SSC | Internal, Video (SW) | 3.4.1.4 |
| 2A8 | J18 | 26 | SW4.TP13 | Shortwave 4 Test 13 | 26 | SSC | Internal, Video (SW) | 3.4.1.4 |
| 2A8 | J18 | 27 | STAR1.TP12 | Star Sense 1 Test 12 | 26 | SSC | Internal, Video (STAR) | 3.4.1.4 |
| 2A8 | J18 | 28 | STAR2.TP12 | Star Sense 2 Test 12 | 26 | SSC | Internal, Video (STAR) | 3.4.1.4 |
| 2A8 | J18 | 29 | STAR3.TP12 | Star Sense 3 Test 12 | 26 | SSC | Internal, Video (STAR) | 3.4.1.4 |
| 2A8 | J18 | 30 | STAR4.TP12 | Star Sense 4 Test 12 | 26 | SSC | Internal, Video (STAR) | 3.4.1.4 |
| 2A8 | J18 | 31 | STAR5.TP20 | Star Sense 5 Test 20 | 26 | SSC | Internal, Video (STAR) | 3.4.1.4 |
| 2A8 | J18 | 32 | STAR6.TP20 | Star Sense 6 Test 20 | 26 | SSC | Internal, Video (STAR) | 3.4.1.4 |
| 2A8 | J18 | 33 | STAR7.TP20 | Star Sense 7 Test 20 | 26 | SSC | Internal, Video (STAR) | 3.4.1.4 |
| 2A8 | J18 | 34 | STAR8.TP20 | Star Sense 8 Test 20 | 26 | SSC | Internal, Video (STAR) | 3.4.1.4 |
| 2A8 | J18 | 35 | VIS1.TP7 | Visible 1 Test 7 | 26 | SSC | Internal, Video (VIS) | 3.4.1.4 |
| 2A8 | J18 | 36 | VIS2.TP7 | Visible 2 Test 7 | 26 | SSC | Internal, Video (VIS) | 3.4.1.4 |
| 2A8 | J18 | 37 | VIS3.TP7 | Visible 3 Test 7 | 26 | SSC | Internal, Video (VIS) | 3.4.1.4 |
| 2A8 | J18 | 38 | VIS4.TP7 | Visible 4 Test 7 | 26 | SSC | Internal, Video (VIS) | 3.4.1.4 |
| 2A8 | J18 | 39 | GROUND | Electronics Module Ground | 24 | Single | Internal, Video | 3.4.1.4 |
| 2A8 | J18 | 40 | GROUND | Electronics Module Ground | 24 | Single | Internal, Video | 3.4.1.4 |
| 2A8 | J18 | 41 | GROUND | Electronics Module Ground | 24 | Single | Internal, Video | 3.4.1.4 |
| 2A8 | J18 | 42 | GROUND | Electronics Module Ground | 24 | Single | Internal, Video | 3.4.1.4 |
| 2A8 | J18 | 43 | GROUND | Electronics Module Ground | 24 | Single | Internal, Video | 3.4.1.4 |
| 2A8 | J18 | 44 | GROUND | Electronics Module Ground | 24 | Single | Internal, Video | 3.4.1.4 |
| 2A8 | J18 | 45 | | Unused | | | Internal | |
| 2A8 | J18 | 46 | | Unused | | | Internal | |
| 2A8 | J18 | 47 | EW.HALFC.TP.A | E-W Half Cycle Test Point Side 1 | 26 | Single | Internal, Scan Position | 3.4.1.4 |
| 2A8 | J18 | 48 | NS.HALFC.TP.A | N-S Half Cycle Test Point Side 1 | 26 | Single | Internal, Scan Position | 3.4.1.4 |
| 2A8 | J18 | 49 | EW.HALFC.TP.B | E-W Half Cycle Test Point Side 2 | 26 | Single | Internal, Scan Position | 3.4.1.4 |
| 2A8 | J18 | 50 | NS.HALFC.TP.B | N-S Half Cycle Test Point Side 2 | 26 | Single | Internal, Scan Position | 3.4.1.4 |

| Module | J# | Pin# | Signal Name | Signal Description | Wire Size (AWG) | Wire Type | Signal Type | ICD Para. Reference |
|---|---|---|---|---|---|---|---|---|
| 2A8 | J19 | 1 | TP.COMPOSITE.A | Filter Wheel Timing Composite Test Side 1 | 26 | Single | Internal, Filter Wheel Timing | 3.4.1.4 |
| 2A8 | J19 | 2 | KEY | Key | | | Internal | |
| 2A8 | J19 | 3 | TP.COMPOSITE.B | Filter Wheel Timing Composite Test Side 2 | 26 | Single | Internal, Filter Wheel Timing | 3.4.1.4 |
| 2A8 | J19 | 4 | TP.400KHZ.AN.A | 400KHZ Test Side 1 | 26 | SSC | Internal, Filter Wheel Timing | 3.4.1.4 |
| 2A8 | J19 | 5 | TP.400KHZ.AN.B | 400KHZ Test Side 2 | 26 | SSC | Internal, Filter Wheel Timing | 3.4.1.4 |
| 2A8 | J19 | 6 | TP.BCL.A | Formatter Bit Clock Test Side 1 | 26 | SSC | Internal, Filter Wheel Timing | 3.4.1.4 |
| 2A8 | J19 | 7 | TP.BCL.B | Formatter Bit Clock Test Side 2 | 26 | SSC | Internal, Filter Wheel Timing | 3.4.1.4 |
| 2A8 | J19 | 8 | TP.BIT6.A | Formatter Timing Bit 6 Test Side 1 | 26 | Single | Internal, Filter Wheel Timing | 3.4.1.4 |
| 2A8 | J19 | 9 | TP.BIT6.B | Formatter Timing Bit 6 Test Side 2 | 26 | Single | Internal, Filter Wheel Timing | 3.4.1.4 |
| 2A8 | J19 | 10 | TP.MR.MV.STA.A | Mirror Move Start Test Side 1 | 26 | Single | Internal, Filter Wheel Timing | 3.4.1.4 |
| 2A8 | J19 | 11 | TP.MR.MV.STA.B | Mirror Move Start Test Side 2 | 26 | Single | Internal, Filter Wheel Timing | 3.4.1.4 |
| 2A8 | J19 | 12 | TP.MR.MV.STP.A | Mirror Move Stop Test Side 1 | 26 | Single | Internal, Filter Wheel Timing | 3.4.1.4 |
| 2A8 | J19 | 13 | TP.MR.MV.STP.B | Mirror Move Stop Test Side 2 | 26 | Single | Internal, Filter Wheel Timing | 3.4.1.4 |
| 2A8 | J19 | 14 | TP.PN.CODE.A | PN Code Only Side 1 | 26 | SSC | Internal, Filter Wheel Timing | 3.4.1.4 |
| 2A8 | J19 | 15 | TP.PN.CODE.B | PN Code Only Side 2 | 26 | SSC | Internal, Filter Wheel Timing | 3.4.1.4 |
| 2A8 | J19 | 16 | KEY | Key | | | Internal | |
| 2A8 | J19 | 17 | EXT.CL.A | Ext Filter Wheel Sync Clock Test Side 1 | 26 | SSC | Internal, Filter Wheel Timing | 3.4.1.4 |
| 2A8 | J19 | 18 | EXT.CL.B | Ext Filter Wheel Sync Clock Test Side 2 | 26 | SSC | Internal, Filter Wheel Timing | 3.4.1.4 |
| 2A8 | J19 | 19 | EXT.CL.CONT.A | Ext Filter Wheel Sync Clk Enable Test Side 1 | 26 | Single | Internal, Filter Wheel Timing | 3.4.1.4 |
| 2A8 | J19 | 20 | EXT.CL.CONT.B | Ext Filter Wheel Sync Clk Enable Test Side 2 | 26 | Single | Internal, Filter Wheel Timing | 3.4.1.4 |
| 2A8 | J19 | 21 | TC.SP.LK.EN.A | Space Look Enable Test Side 1 | 26 | Single | Internal, Filter Wheel Timing | 3.4.1.4 |
| 2A8 | J19 | 22 | TC.SP.LK.EN.B | Space Look Enable Test Side 2 | 26 | Single | Internal, Filter Wheel Timing | 3.4.1.4 |
| 2A8 | J19 | 23 | TP.PN.SYNC.A | PN Sync Side 1 | 26 | Single | Internal, Filter Wheel Timing | 3.4.1.4 |
| 2A8 | J19 | 24 | TP.PN.SYNC.B | PN Sync Side 2 | 26 | Single | Internal, Filter Wheel Timing | 3.4.1.4 |
| 2A8 | J19 | 25 | PS.TEST.DIS.A | Power Supply Test Disable Side 1 | 26 | Single | Internal, Filter Wheel Timing | 3.4.1.4 |
| 2A8 | J19 | 26 | RAD.TEST.SEL* | Radiator Test Select | 26 | Single | Internal | |
| 2A8 | J19 | 27 | GROUND | Electronics Module Ground | 24 | Single | Internal, | 3.4.1.4 |
| 2A8 | J19 | 28 | GROUND | Electronics Module Ground | 24 | Single | Internal, | 3.4.1.4 |
| 2A8 | J19 | 29 | GROUND | Electronics Module Ground | 24 | Single | Internal, | 3.4.1.4 |
| 2A8 | J19 | 30 | GROUND | Electronics Module Ground | 24 | Single | Internal, | 3.4.1.4 |
| 2A8 | J19 | 31 | GROUND | Electronics Module Ground | 24 | Single | Internal, | 3.4.1.4 |
| 2A8 | J19 | 32 | GROUND | Electronics Module Ground | 24 | Single | Internal, | 3.4.1.4 |
| 2A8 | J19 | 33 | NS.GATE.TP.A | N-S X1 Gate Side 1 | 26 | Single | Internal, Scan Position | 3.4.1.4 |
| 2A8 | J19 | 34 | EW.GATE.TP.A | E-W X1 Gate Side 1 | 26 | Single | Internal, Scan Position | 3.4.1.4 |
| 2A8 | J19 | 35 | INIT.TEST.A | Initialization Test Side 1 | 26 | Single | Internal, Scan Position | 3.4.1.4 |
| 2A8 | J19 | 36 | TEST.RTN.A | Electronics Module Ground | 26 | Single | Internal, Scan Position | 3.4.1.4 |
| 2A8 | J19 | 37 | NS.GATE.TP.B | N-S X1 Gate Side 2 | 26 | Single | Internal, Scan Position | 3.4.1.4 |
| 2A8 | J19 | 38 | EW.GATE.TP.B | E-W X1 Gate Side 2 | 26 | Single | Internal, Scan Position | 3.4.1.4 |
| 2A8 | J19 | 39 | INIT.TEST.B | Initialization Test Side 2 | 26 | Single | Internal, Scan Position | 3.4.1.4 |
| 2A8 | J19 | 40 | TEST.RTN.B | Electronics Module Ground | 26 | Single | Internal, Scan Position | 3.4.1.4 |
| 2A8 | J19 | 41 | PS.TEST.DIS.B | Power Supply Test Disable Side 2 | 26 | Single | Internal, Scan Position | 3.4.1.4 |
| 2A8 | J19 | 42 | HSG.TEST.SEL* | Housing Test Select | 26 | Single | Internal | |
| 2A8 | J19 | 43 | EW.MITEST.A | E-W Motor Current Test Side 1 | 26 | T(43,44) | Internal, Motor Current | 3.4.1.4 |
| 2A8 | J19 | 44 | EW.MITEST.RN.A | E-W Motor Current Test Return Side 1 | 26 | T(43,44) | Internal, Motor Current | 3.4.1.4 |
| 2A8 | J19 | 45 | EW.MITEST.B | E-W Motor Current Test Side 2 | 26 | T(45,46) | Internal, Motor Current | 3.4.1.4 |
| 2A8 | J19 | 46 | EW.MITEST.RN.B | E-W Motor Current Test Return Side 2 | 26 | T(45,46) | Internal, Motor Current | 3.4.1.4 |
| 2A8 | J19 | 47 | NS.MITEST.A | N-S Motor Current Test Side 1 | 26 | T(47,48) | Internal, Motor Current | 3.4.1.4 |
| 2A8 | J19 | 48 | NS.MITEST.RN.A | N-S Motor Current Test Return Side 1 | 26 | T(47,48) | Internal, Motor Current | 3.4.1.4 |
| 2A8 | J19 | 49 | NS.MITEST.B | N-S Motor Current Test Side 2 | 26 | T(49,50) | Internal, Motor Current | 3.4.1.4 |
| 2A8 | J19 | 50 | NS.MITEST.RN.B | N-S Motor Current Test Return Side 2 | 26 | T(49,50) | Internal, Motor Current | 3.4.1.4 |

| Module | J# | Pin# | Signal Name | Signal Description | Wire Size (AWG) | Wire Type | Signal Type | ICD Para. Reference |
|---|---|---|---|---|---|---|---|---|
| 2A8 | J20 | 1 | NS.FP.1.A | N-S Fixed Pattern Bit 1 Side 1 | 26 | Single | Internal | 3.4.1.4 |
| 2A8 | J20 | 2 | NS.FP.2.A | N-S Fixed Pattern Bit 2 Side 1 | 26 | Single | Internal | 3.4.1.4 |
| 2A8 | J20 | 3 | NS.FP.3.A | N-S Fixed Pattern Bit 3 Side 1 | 26 | Single | Internal | 3.4.1.4 |
| 2A8 | J20 | 4 | NS.FP.4.A | N-S Fixed Pattern Bit 4 Side 1 | 26 | Single | Internal | 3.4.1.4 |
| 2A8 | J20 | 5 | NS.FP.5.A | N-S Fixed Pattern Bit 5 Side 1 | 26 | Single | Internal | 3.4.1.4 |
| 2A8 | J20 | 6 | NS.FP.6.A | N-S Fixed Pattern Bit 6 Side 1 | 26 | Single | Internal | 3.4.1.4 |
| 2A8 | J20 | 7 | NS.FP.7.A | N-S Fixed Pattern Bit 7 Side 1 | 26 | Single | Internal | 3.4.1.4 |
| 2A8 | J20 | 8 | NS.FP.8.A | N-S Fixed Pattern Bit 8 Side 1 | 26 | Single | Internal | 3.4.1.4 |
| 2A8 | J20 | 9 | EW.FP.1.A | E-W Fixed Pattern Bit 1 Side 1 | 26 | Single | Internal | 3.4.1.4 |
| 2A8 | J20 | 10 | EW.FP.2.A | E-W Fixed Pattern Bit 2 Side 1 | 26 | Single | Internal | 3.4.1.4 |
| 2A8 | J20 | 11 | EW.FP.3.A | E-W Fixed Pattern Bit 3 Side 1 | 26 | Single | Internal | 3.4.1.4 |
| 2A8 | J20 | 12 | EW.FP.4.A | E-W Fixed Pattern Bit 4 Side 1 | 26 | Single | Internal | 3.4.1.4 |
| 2A8 | J20 | 13 | EW.FP.5.A | E-W Fixed Pattern Bit 5 Side 1 | 26 | Single | Internal | 3.4.1.4 |
| 2A8 | J20 | 14 | EW.FP.6.A | E-W Fixed Pattern Bit 6 Side 1 | 26 | Single | Internal | 3.4.1.4 |
| 2A8 | J20 | 15 | EW.FP.7.A | E-W Fixed Pattern Bit 7 Side 1 | 26 | Single | Internal | 3.4.1.4 |
| 2A8 | J20 | 16 | EW.FP.8.A | E-W Fixed Pattern Bit 8 Side 1 | 26 | Single | Internal | 3.4.1.4 |
| 2A8 | J20 | 17 | EW.SIN.TEST.A | E-W Sin Output Test Side 1 | 26 | Single | Internal | 3.4.1.4 |
| 2A8 | J20 | 18 | EW.COS.TEST.A | E-W Cos Output Test Side 1 | 26 | Single | Internal | 3.4.1.4 |
| 2A8 | J20 | 19 | NS.FP.1.B | N-S Fixed Pattern Bit 1 Side 2 | 26 | Single | Internal | 3.4.1.4 |
| 2A8 | J20 | 20 | NS.FP.2.B | N-S Fixed Pattern Bit 2 Side 2 | 26 | Single | Internal | 3.4.1.4 |
| 2A8 | J20 | 21 | NS.FP.3.B | N-S Fixed Pattern Bit 3 Side 2 | 26 | Single | Internal | 3.4.1.4 |
| 2A8 | J20 | 22 | NS.FP.4.B | N-S Fixed Pattern Bit 4 Side 2 | 26 | Single | Internal | 3.4.1.4 |
| 2A8 | J20 | 23 | NS.FP.5.B | N-S Fixed Pattern Bit 5 Side 2 | 26 | Single | Internal | 3.4.1.4 |
| 2A8 | J20 | 24 | NS.FP.6.B | N-S Fixed Pattern Bit 6 Side 2 | 26 | Single | Internal | 3.4.1.4 |
| 2A8 | J20 | 25 | NS.FP.7.B | N-S Fixed Pattern Bit 7 Side 2 | 26 | Single | Internal | 3.4.1.4 |
| 2A8 | J20 | 26 | NS.FP.8.B | N-S Fixed Pattern Bit 8 Side 2 | 26 | Single | Internal | 3.4.1.4 |
| 2A8 | J20 | 27 | EW.FP.1.B | E-W Fixed Pattern Bit 1 Side 2 | 26 | Single | Internal | 3.4.1.4 |
| 2A8 | J20 | 28 | EW.FP.2.B | E-W Fixed Pattern Bit 2 Side 2 | 26 | Single | Internal | 3.4.1.4 |
| 2A8 | J20 | 29 | EW.FP.3.B | E-W Fixed Pattern Bit 3 Side 2 | 26 | Single | Internal | 3.4.1.4 |
| 2A8 | J20 | 30 | EW.FP.4.B | E-W Fixed Pattern Bit 4 Side 2 | 26 | Single | Internal | 3.4.1.4 |
| 2A8 | J20 | 31 | EW.FP.5.B | E-W Fixed Pattern Bit 5 Side 2 | 26 | Single | Internal | 3.4.1.4 |
| 2A8 | J20 | 32 | EW.FP.6.B | E-W Fixed Pattern Bit 6 Side 2 | 26 | Single | Internal | 3.4.1.4 |
| 2A8 | J20 | 33 | EW.FP.7.B | E-W Fixed Pattern Bit 7 Side 2 | 26 | Single | Internal | 3.4.1.4 |
| 2A8 | J20 | 34 | EW.FP.8.B | E-W Fixed Pattern Bit 8 Side 2 | 26 | Single | Internal | 3.4.1.4 |
| 2A8 | J20 | 35 | EW.SIN.TEST.B | E-W Sin Output Test Side 2 | 26 | Single | Internal | 3.4.1.4 |
| 2A8 | J20 | 36 | EW.COS.TEST.B | E-W Cos Output Test Side 2 | 26 | Single | Internal | 3.4.1.4 |
| 2A8 | J20 | 37 | NS.SIN.TEST.A | N-S Sin Output Test Side 1 | 26 | Single | Internal | 3.4.1.4 |
| 2A8 | J20 | 38 | NS.COS.TEST.A | N-S Cos Output Test Side 1 | 26 | Single | Internal | 3.4.1.4 |
| 2A8 | J20 | 39 | CPY14.T.A | Present Cycle N-S Increment 4 Test Side 1 | 26 | Single | Internal | 3.4.1.4 |
| 2A8 | J20 | 40 | CPY14.T.B | Present Cycle N-S Increment 4 Test Side 2 | 26 | Single | Internal | 3.4.1.4 |
| 2A8 | J20 | 41 | CPX13.T.A | Present Cycle E-W Increment 3 Test Side 1 | 26 | Single | Internal | 3.4.1.4 |
| 2A8 | J20 | 42 | CPX13.T.B | Present Cycle E-W Increment 3 Test Side 2 | 26 | Single | Internal | 3.4.1.4 |
| 2A8 | J20 | 43 | GROUND | Electronics Module Ground | 24 | Single | Internal | 3.4.1.4 |
| 2A8 | J20 | 44 | GROUND | Electronics Module Ground | 24 | Single | Internal | 3.4.1.4 |
| 2A8 | J20 | 45 | GROUND | Electronics Module Ground | 24 | Single | Internal | 3.4.1.4 |
| 2A8 | J20 | 46 | GROUND | Electronics Module Ground | 24 | Single | Internal | 3.4.1.4 |
| 2A8 | J20 | 47 | KEY | Key | | | Internal | |
| 2A8 | J20 | 48 | KEY | Key | | | Internal | |
| 2A8 | J20 | 49 | NS.SIN.TEST.B | N-S Sin Output Test Side 2 | 26 | Single | Internal | 3.4.1.4 |
| 2A8 | J20 | 50 | NS.COS.TEST.B | N-S Cos Output Test Side 2 | 26 | Single | Internal | 3.4.1.4 |

## 5.5 Sounder Interface Control Drawings

The Interface Control Drawings for the Sounder instrument are attached for reference. These drawings are controlled as ITT document numbers 8175756, 8175757, and 8175758 for the Sensor Module, Electronics Module and Power Supply Module, respectively.

The Thermal Hardware Installation page (sheet 7) reflects a preliminary design and will be modified upon selection of the spacecraft vendor. Final blanket design will be a joint effort between ITT and the spacecraft vendor.

Drawing 8175756 (Sounder Sensor Module ICD) Notes:

1. Only the item described on this drawing when procured from ITT is approved by NASA for use in the application(s) specified hereon. A substitute item shall not be used without prior testing and approval by NASA.

2. Performance per ITT A/CD specification 8175750. Electrical interface and connector pin assignments per ITT A/CD ICD 8175051.

3. Identification marking, where shown per ITT A/CD specification 8175150.

4. For Handling considerations, see the following:
   A) For static sensitive device handling, see ITT A/CD specification 8151020.
   B) For sensitive thermal control surfaces, see ITT A/CD specification 8140210.
   C) For handling and installation requirements, see ITT A/CD procedure 8156317.
   D) Contamination Control per ITT A/CD specification 8160010.

5. Coordinate system definition:

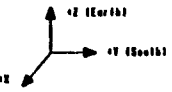


6. ◆ indicates nominal Center of Gravity location (for reference only). See ITT A/CD 8175751 for nominal values. Actuals to be provided in the final data package upon delivery of instrument.

7. Moments of Inertia (calculated about C.G.'s) per ITT A/CD ICD 8175751.

8. Weight per ITT A/CD ICD 8175751.

9. Interface mounting holes (ØØ.344 DIA x 5 holes) to be located using ITT drill template (part number 7001 with pin engaging ØØ.320 DIA reference hole.

10. Three shaded mounting pads are primary interface plane [-A-]. When the primary pads are bolted and torqued, the three remaining secondary pads shall be shimmed at the spacecraft vendor facility to match the nominal gap defined at ITT and supplied to the spacecraft vendor) within ± 0.001 inches.

11. Footprint contact area consists of 6 pads. Each pad has an area of 0.94in$^2$ (6.06 cm$^2$). Each pad is flat within 0.001 TIR.

12. Power/Thermal Dissipation per ITT A/CD ICD 8175751.

13. Operating temperature limits as described in ITT A/CD ICD 8175756.

14. Scan angles (-X/+X, -Y/+Y) from optical port.

15. Fields of View:
   A) Optical Port
   B) Radiant Cooler-refer to ITT A/CD ICD 8175751 for load values
   C) Louvers
   D) Filter Wheel Cooler-refer to ITT A/CD ICD 8175751

16. Optical reference cube visible from the +Z, ± Y AND -X faces. Used during spacecraft integration. The angles between this cube and the optical axis to be measured at ITT with an accuracy of ± 0.015 deg. in 3-axes. Cube flies with spacecraft. Do not remove cube. Alignment requirements per ITT A/CD specification 8175750.

17. Align sensor module at spacecraft level per satellite contractor procedure.

18. Screw heads and blanket grounds not shown, may protrude above external panels, 0.18 inches or less.

19. This surface is velcro for door latching. Bracket covered with kapton tape, with an absorbtivity of 0.40 and an emissivity of >0.80 (B.O.L.).

20. These areas indicate raised access panels. Height above indicated surface, including fastener height, not to exceed 0.31.

21. Fittings for instrument lifting tubes are provided at these locations. Remove lifting and integration tube fittings for flight. Install plugs, ITT PN 8147342, in four (4), marked "A" places for flight. Torque to 40 ± 2 in-lbs. State plugs during satellite integration per satellite contractor procedure.

22. This port to be for flushing instrument with dry nitrogen for transport and storage. Cap to be safety wired or omitted for launch. Purge rate 19.8 CFPM to maintain a maximum humidity level of 20%. This purge may be suspended during assembly processing, thermal-vacuum testing and transportation.

23. Both cooler cover status circuits (closed and captured) must read normal(open circuit with cooler cover closed and closed with cooler cover deployed. For wire list/pinassignments, see ITT A/CD ICD 8175051.

24. Electro Explosive Device (EED) cartridge to be provided ITT. This module assembly will be delivered to the satellite contractor with the EED cartridge and associated hardware omitted. Cartridge must be installed before launch. Final stowing for flight will be done by the satellite contractor. The EED cover shall be installed when the mating connectors are not installed. The EED cover shall be removed for flight.

25. Cooler cover and associated mounting hardware along with exterior(multi-layer insulation blanket over radiant cooler to be supplied by ITT. Nominal thickness of blanket 0.25 inches is not included in overall instrument dimensions. Outer layer of 5 mil silver teflon (Teflon side with effective emissivity$\epsilon \geq$ 0.8. Grounded per ITT A/CD specification 8175750.

26. Kapton exterior multi-layer blankets with an effective emissivity $\epsilon \leq$ 0.05 to be supplied by ITT. Nominal thickness of 0.25 inches is not included in overall instrument dimensions.

27. Harness provided by the satellite contractor.

28. All optical surfaces shall be cleaned by ITT personnel per 8147203 prior to flight.

29. Thermocouples and accelerometers located per ITT A/CD drawing 8162480. Prior to flight they shall grounded and terminated.

30. Configuration per table below.

31. External envelope of 0.5" due to dynamic deflections.

32. Plug locations A have plugs marked "A" installed per note 30 table. Plug locations B never have plugs installed.

30 Sounder Configuration Guide

| Item | Quantity | Ship from ITT | Environmental Test | Ship to Launch Site | Flight | Storage | Testing with Optical Stimulus | Testing without Optical Stimulus |
|---|---|---|---|---|---|---|---|---|
| Louver Cover | 1 | OFF | OFF | OFF | OFF | OFF | ON | ON |
| Molecular Vent Cover | 1 | ON | OFF | ON | OFF | ON | ON | ON |
| Lift Tube Plugs Marked "A" | 4 | OFF | ON | ON | ON | ON | OPT | OPT |
| Lift Tube Plugs Marked "B" | 2 | OFF | OFF | OFF | OFF | OFF | OFF | OFF |
| Optical Port Cover | 1 | ON | OFF | ON | OFF | ON | OFF | ON |
| Radiant Cooler Self Cover | 1 | ON | OFF | ON | OFF | ON | ON | ON |
| Lift Tubes | 6 | OFF | OFF | OFF | OFF | OFF | OPT | OPT |
| Connector Cover | 1 | OFF | ON | ON | ON | ON | OPT | OPT |
| Dilness Mirror | 1 | ON | ON | ON | OFF | ON | ON | ON |
| Optical Port Sunshield | 1 | OFF | ON | ON | ON | ON | OPT | OPT |
| EEDs | 2 | OFF | ON | OFF | ON | OFF | OPT | OPT |
| Cable Collar | 1 | OFF | ON | OFF | ON | OFF | OPT | OPT |
| J0 Hard Cover | 1 | ON | OFF | ON | OFF | ON | OFF | OFF |
| J0 Soft Cover | 1 | ON | OFF | ON | OFF | ON | ON | ON |
| Dilness Mirror Replacement Panel | 1 | OFF | OFF | OFF | ON | OFF | OFF | OFF |
| J10 Shorting Block | 1 | ON | OFF | OFF | OFF | OFF | OFF | OFF |

OPT = Optional

INTERFACE CONTROL DRAWING

NOTES AND DRAWING INDEX

ITT AEROSPACE/COMMUNICATIONS DIVISION FORT WAYNE, INDIANA, U.S.A.

MODULE, SOUNDER SENSOR

SIZE E | CODE IDENT NO 31550 | DWG NO 8175

SCALE | SHEET

8175756

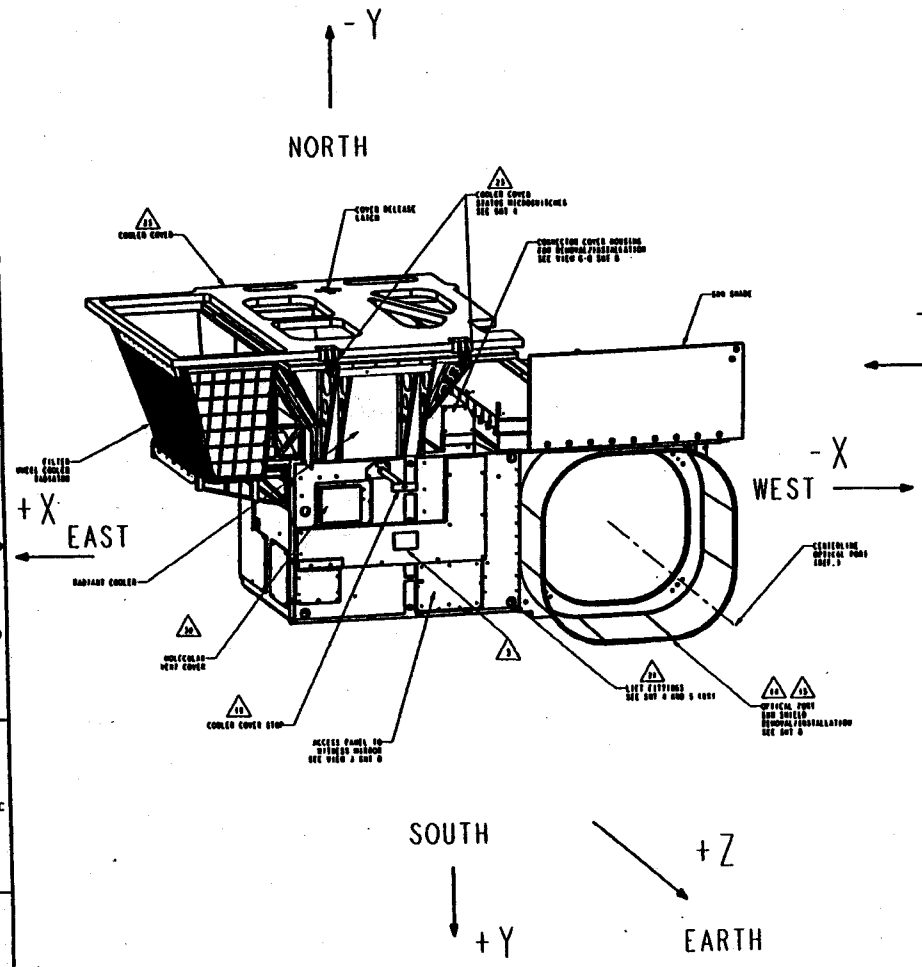


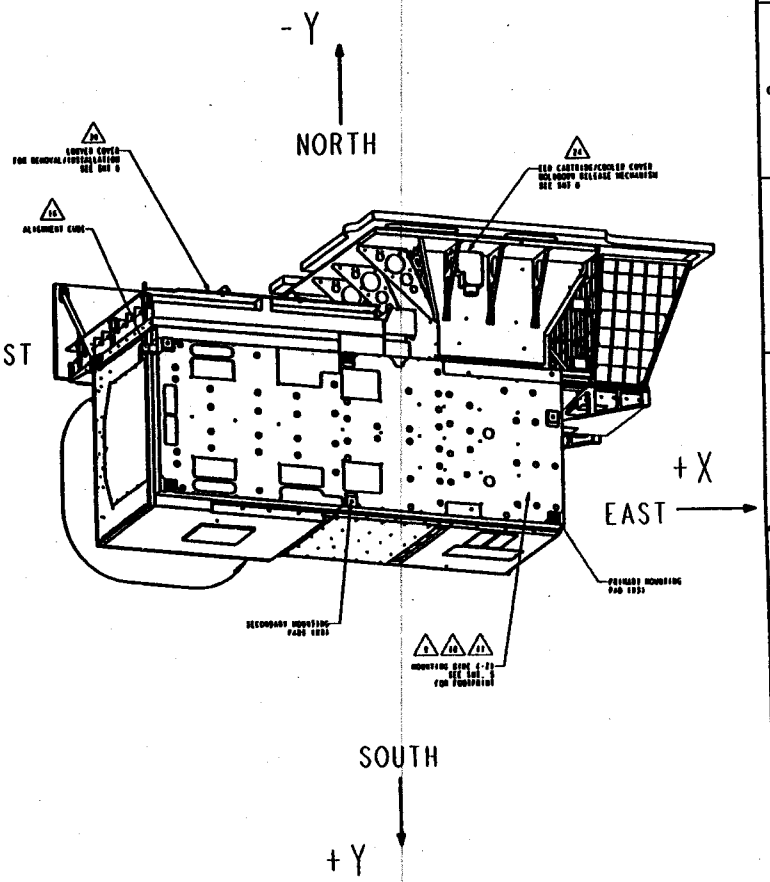


3D STOWED LAYOUT

E 31550 8175756

8175756

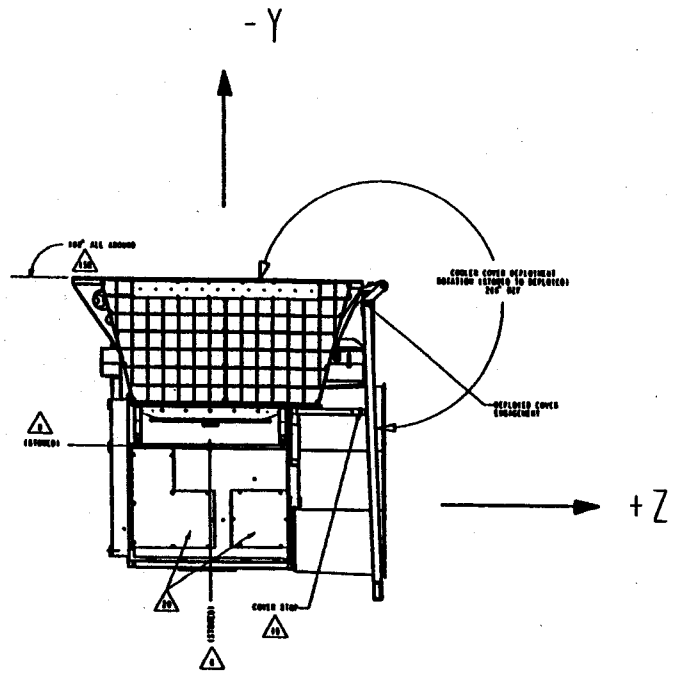


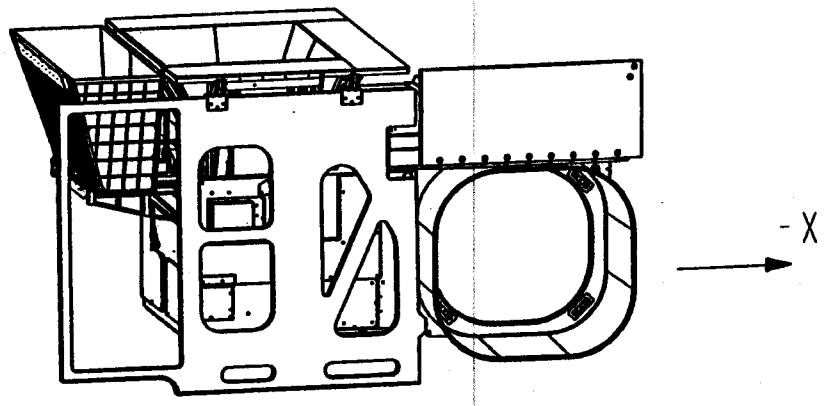


3D DEPLOYED LAYOUT

E 31550 81757

SCALE SEE ARD AS NOTED SHEET

81757 56

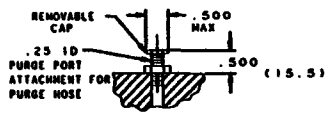


DETAIL D

SCALE: 1/1

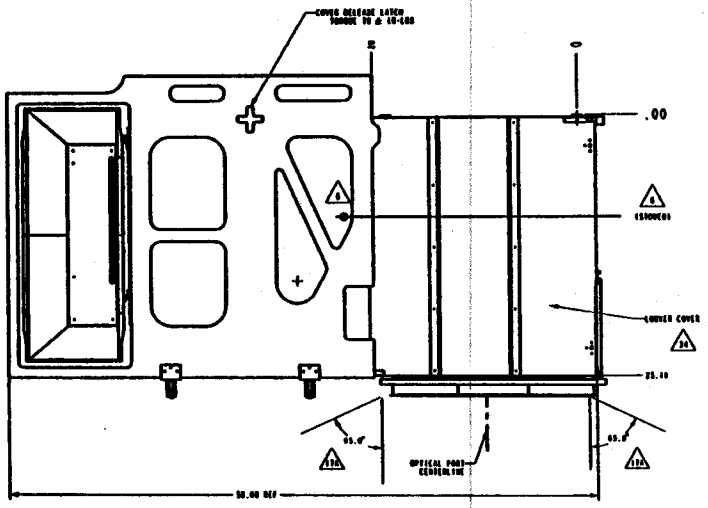


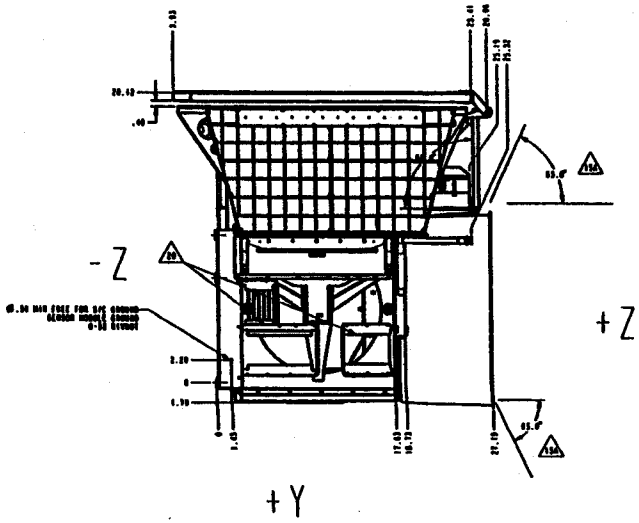


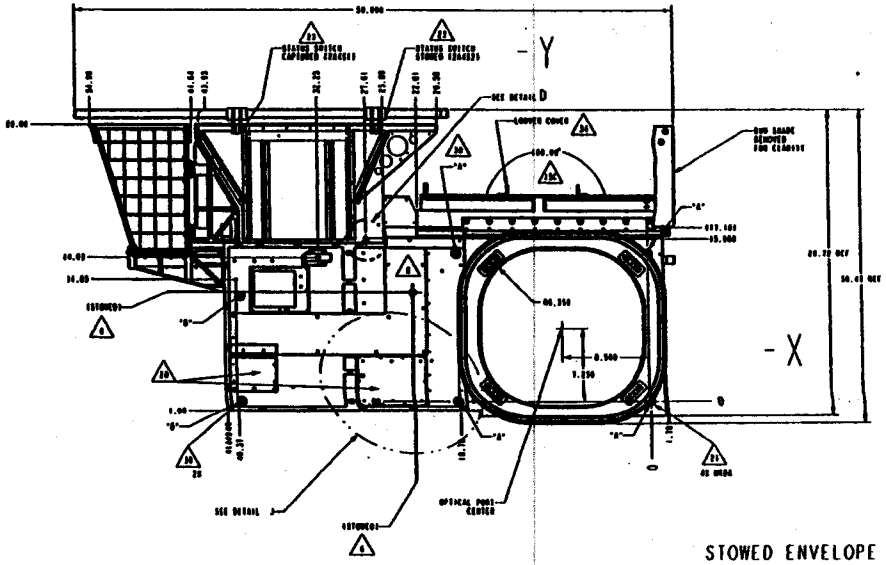


STOWED ENVELOPE

| | | | |
|---|---|---|---|
| SIZE | CODE NO. | DWG NO. | |
| E | 31550 | 8175756 | |
| SCALE 1/1 | | SHEET 1 OF 1 | |

8175756

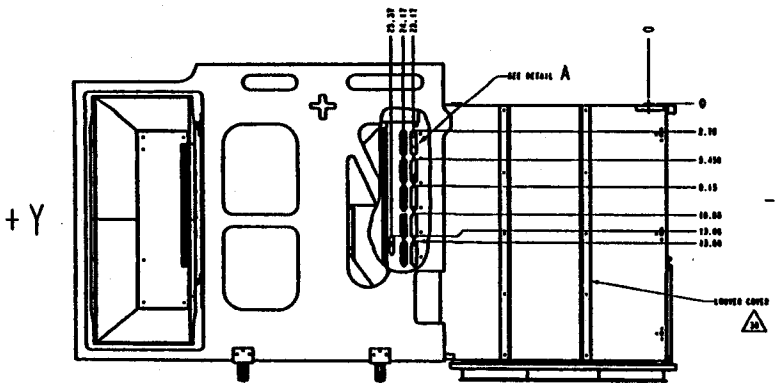


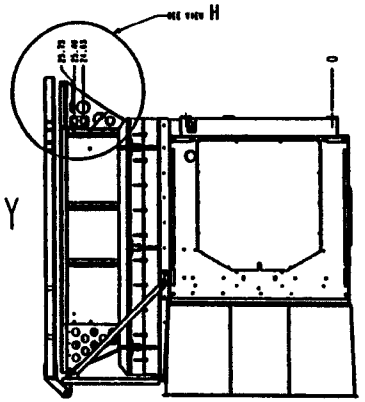


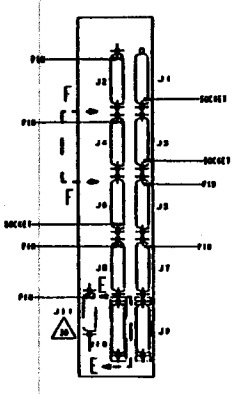


DETAIL A

SPACECRAFT, 1 LOCATION SHOWN

SCALE: NONE

TORQUE REQUIREMENT FOR CONNECTOR AT SPACECRAFT LEVEL 40 ±2 IN-OZ

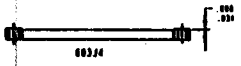


VIEW F-F

SCALE: NONE
TO
ROTATED 90° CCW

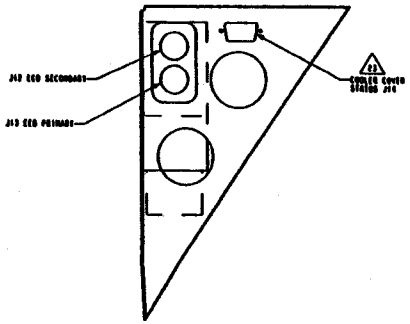


VIEW H

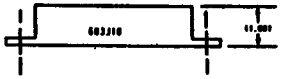


VIEW E-E (J10 ONLY)

SCALE: NONE
ROTATED 90° CW

CONNECTOR PIN ASSIGNMENT PER SEE ICD 81757D1

| CONNECTOR INFORMATION | | | |
|---|---|---|---|
| # | TYPE | RATING | FUNCTION |
| J1 | [illegible] | 1.10 | E-BOX TELEMETRY |
| J2 | [illegible] | 10.00 | VIDEO FIRING |
| J3 | [illegible] | 7.50 | DEICE PRIMARY |
| J4 | [illegible] | 7.50 | VIDEO POWER |
| J5 | [illegible] | 15.00 | DEICE CONTROL B2 |
| J6 | [illegible] | 7.50 | VIDEO |
| J7 | [illegible] | 15.00 | DEICE CONTROL B1 |
| J8 | [illegible] | 4.50 | SPACECRAFT COMMUNICATIONS B1 |
| J9 | [illegible] | -- | GOT DIER |
| J10 | [illegible] | -- | COOLER TEST |
| J11 | [illegible] | -- | HEATER BOX POWER |
| J12 | [illegible] | -- | COOLER COVER RELEASE SECONDARY |
| J13 | [illegible] | -- | COOLER COVER RELEASE PRIMARY |
| J14 | [illegible] | -- | COOLED COVER STATUS |

ELECTRICAL INSTALLATION

| | |
|---|---|
| SIZE | DWG NO. |
| E | 81757 |
| SCALE | SHEET |

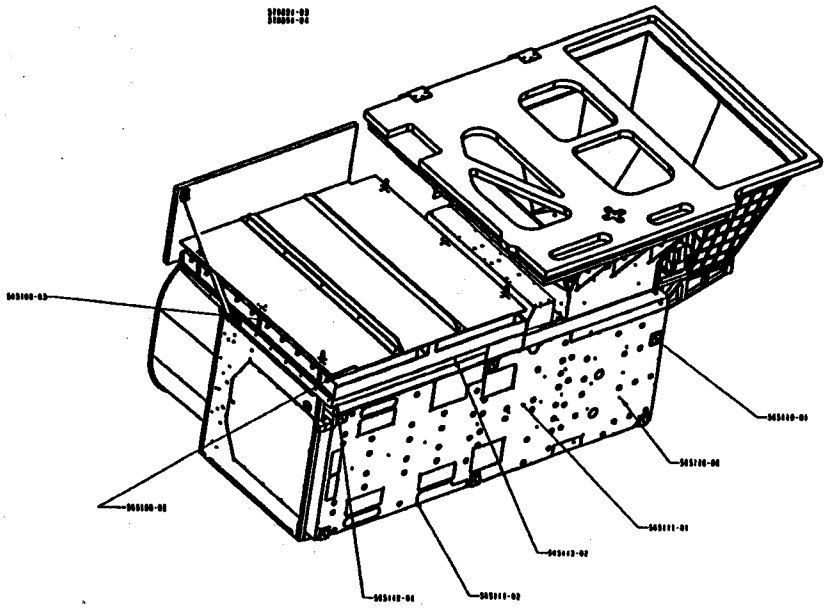


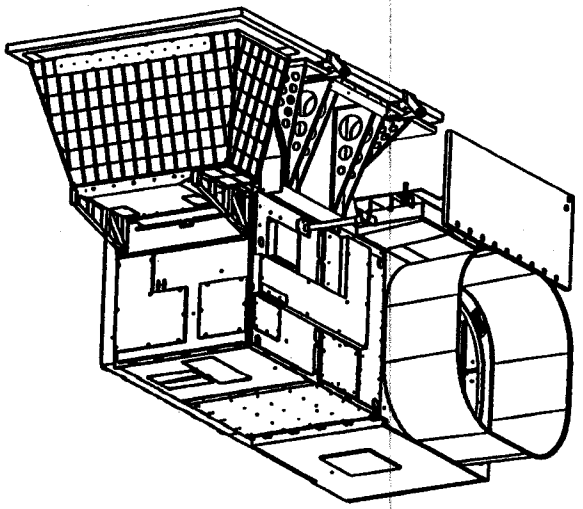

| GLASSES & | MATERIAL | EMISSIVITY | LOCATION |
|---|---|---|---|
| | | | |
| | | | |
| | | | |
| | | | |
| | | | |
| | | | |
| | | | |
| | | | |
| | | | |
| | | | |

NOTE:

THIS SHEET TO BE UPDATED
UPON SPACECRAFT VENDOR SELECTION.

THERMAL HARDWARE INSTALLATION

E 31550 8175756

SHEET 1 OF 3

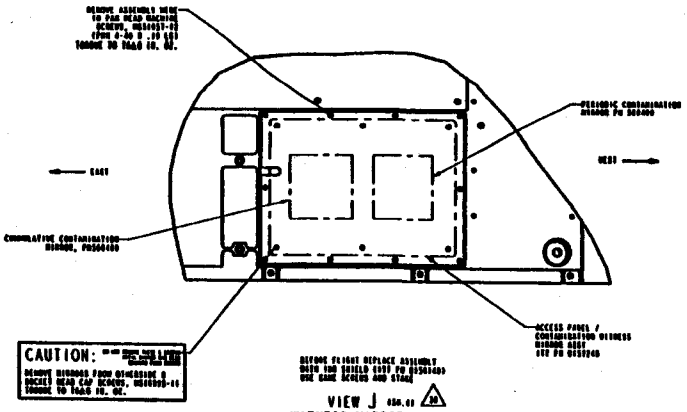


VIEW J
WITNESS MIRROR
INSTALLATION / REMOVAL

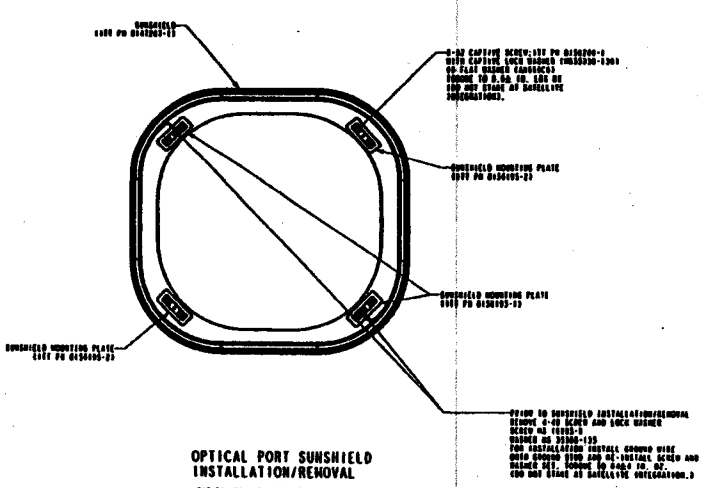

OPTICAL PORT SUNSHIELD
INSTALLATION/REMOVAL

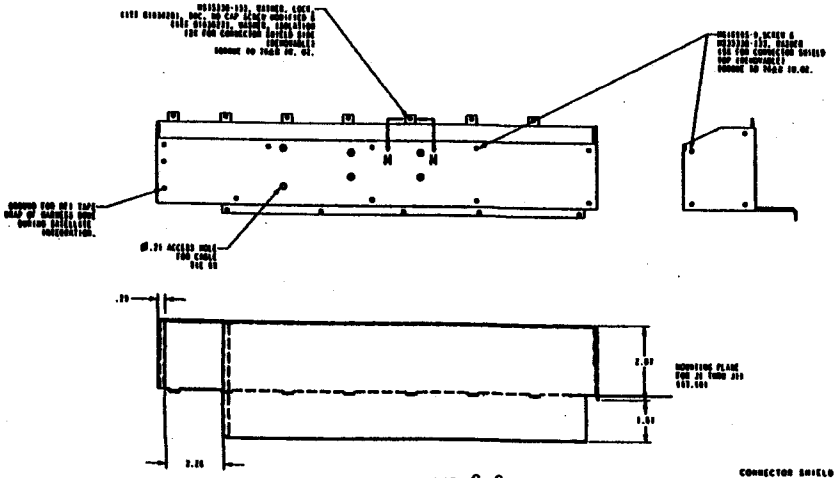


VIEW G-G
SCALE: NONE
CONNECTOR COVER
INSTALLATION / REMOVAL

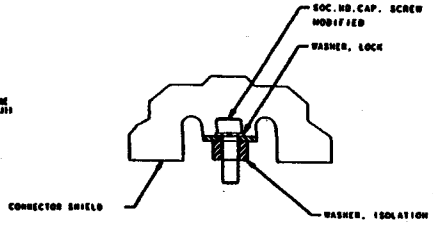


VIEW M-M
SCALE: NONE
ROTATED 180°

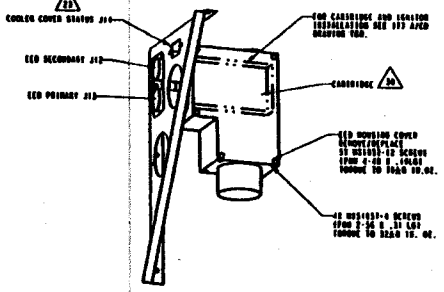


EED HOUSING
INSTALLATION/REMOVAL

ITEM REMOVAL FOR
SPACECRAFT INSTALLATION

| REVISIONS | | | |
|---|---|---|---|
| LTR | DESCRIPTION | DATE | APPROVED |

| | |
|---|---|
| E 31550 | 81757 |
| SCALE | SHEET |

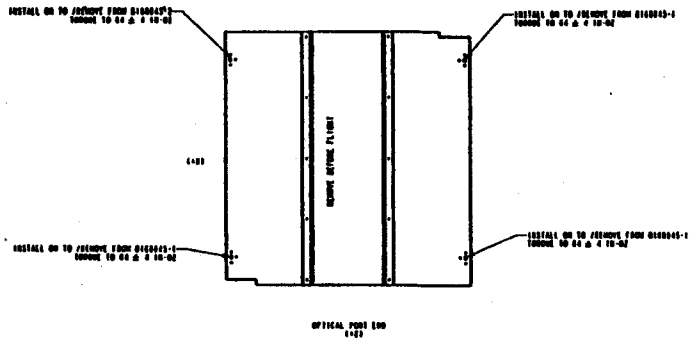


LOUVER COVER
INSTALLATION/REMOVAL

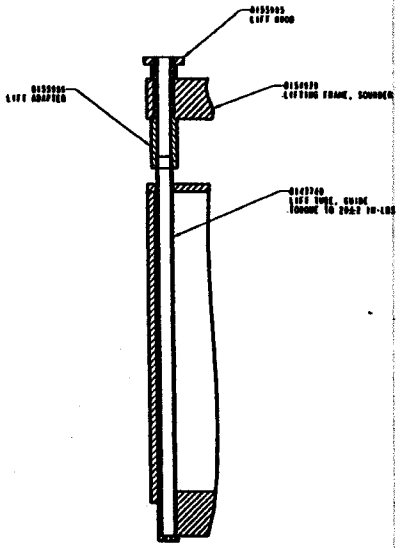


PART OF SECTION C-C
SEE SHEET 5

| REVISIONS | | | |
|---|---|---|---|
| LTR | DESCRIPTION | DATE | APPROVED |

| | |
|---|---|
| E 31550 | 8175756 |
| SHEET | SHEET 5 OF 5 |

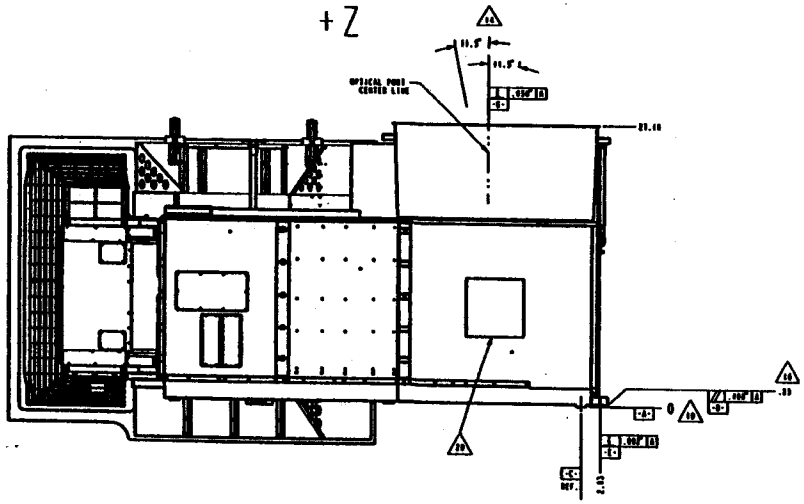


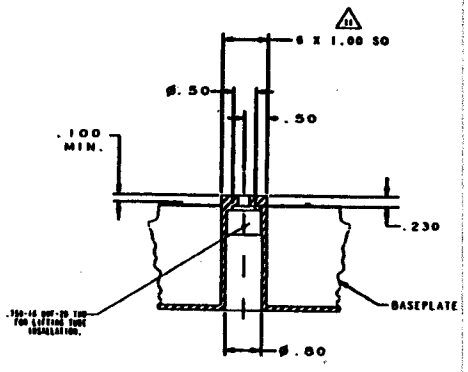


SECTION C-C
SCALE 1/1
6X
SEE SHEET 9

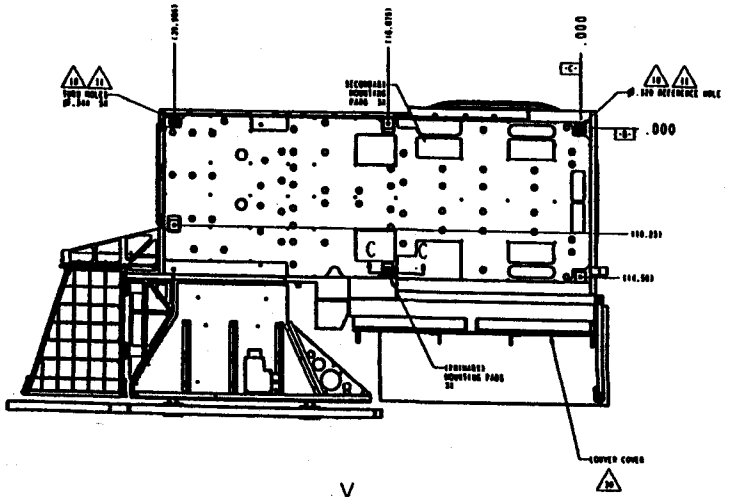


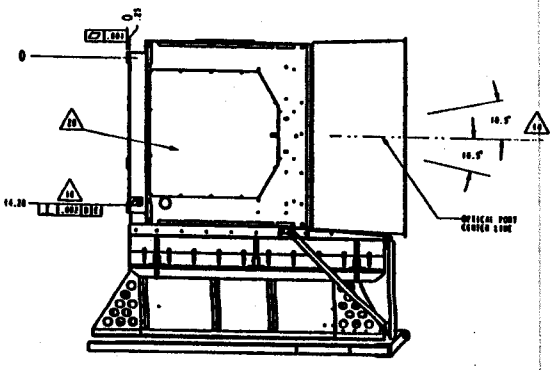


STOWED ENVELOPE

| | | | |
|---|---|---|---|
| SYSTEM | FACILITY NO. | DWG NO. | |
| | E 31550 | 817575 | |
| SCALE 1/2 | | SHEET | |

817575B

Drawing 8175757 (Sounder Electronics-Module ICD) Notes:

1. Only the item described on this drawing, when manufactured by ITT A/CD is approved by NASA for use in the application(s) specified hereon. A substitute item shall not be used without prior testing and approval by NASA.
2. Performance per ITT A/CD specification [illegible]. Electrical interface and connector pin assignments per ITT A/CD ICD [illegible].
3. △ Identification marking, where shown, per ITT A/CD [illegible].
4. For handling considerations, see the following:
   A) For static sensitive device handling, see ITT A/CD specification [illegible].
   B) For sensitive thermal control surfaces, see ITT A/CD specification [illegible].
   C) For handling and installation requirements, see ITT A/CD procedure [illegible].
   D) Contamination Control per ITT A/CD specification [illegible].
5. △ Coordinate system definition:

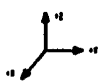


6. △ ◆ Indicates nominal Center of Gravity (nominal values for reference only). Actuals to be provided in the final data package upon delivery of instrument.
7. Moments of Inertia (calculated about C.G.'s) per ITT A/CD ICD [illegible].
8. Weight per ITT A/CD ICD [illegible].
9. △ Interface mounting holes for 6-32 and 10-32 socket head screws to be drilled using ITT drill template [illegible] during satellite integration (to be provided to the satellite contractor).
10. △ Mount using six 10-32 fasteners (equivalent) along the center wall and eight 10-32 fasteners (equivalent) around the perimeter.
11. △ Mounting surface area: [illegible] in²
12. Thermal mounting requirement: flush mount with RTV filler during satellite integration.
13. Thermal dissipation: See ITT A/CD ICD [illegible].
14. Finish:
    Exterior Surface - Black paint (Chemglaze Z306). ε > 0.8.
    Mounting Surface - none
15. Specific Heat: See ITT A/CD ICD [illegible].
16. Qualification Temperatures: per ITT A/CD specification [illegible].
17. Average Wall density: See ITT A/CD ICD [illegible].
18. △ When mounted on flat surface with 4 in-lbs torque on mounting screws, measured flatness less than 0.015 across mounting surface.
19. △ Electrical bonding requirements: ground per MIL-B-5087. Grounding point free of paint for 0.5" diameter minimum.
20. △ Center plug PN [illegible] removable for satellite integration. Torque to 8 ± 1 in-lb (lbs). Stake during satellite integration.
21. △ Covers for connectors J17-19 are not staked prior to shipment to the satellite vendor in order to perform spacecraft testing. Satellite vendor required to torque connector cover screws to 60 ± 4 in-oz and stake in place after final installation.
22. △ For removal of Electronics Module from the spacecraft mounting panel, install .250-20 UNCS in 4 corner locations marked "A".

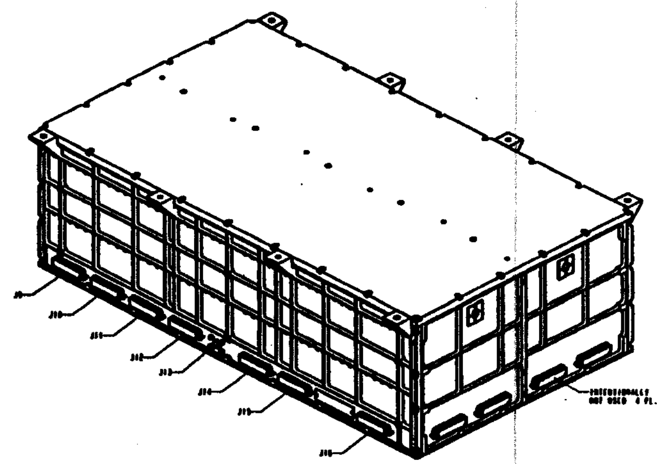


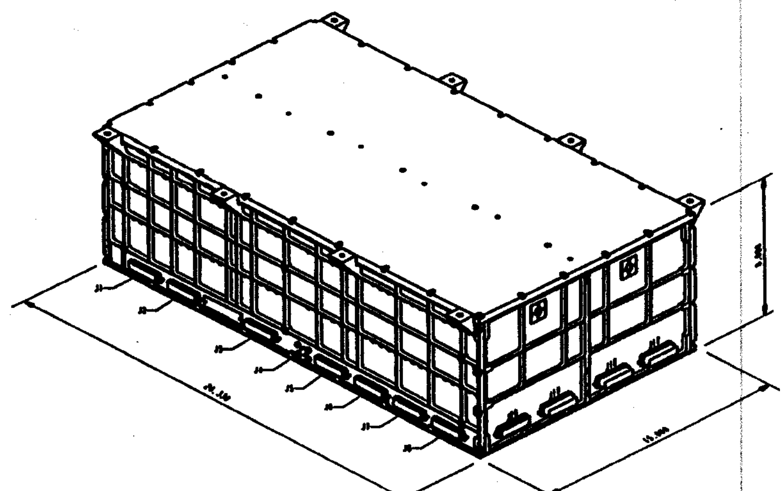

| REVISIONS | | | |
|---|---|---|---|
| LTR | DESCRIPTION | DATE | APPROVED |

ITT AEROSPACE/COMMUNICATIONS DIVISION
FORT WAYNE, INDIANA, U.S.A.

ICD: MODULE, ELECTRONICS-SOUNDER

SIZE E | CODE IDENT NO. 31550 | DWG NO. 8175757

SHEET 1 OF 2

SHEET REVISION RECORD

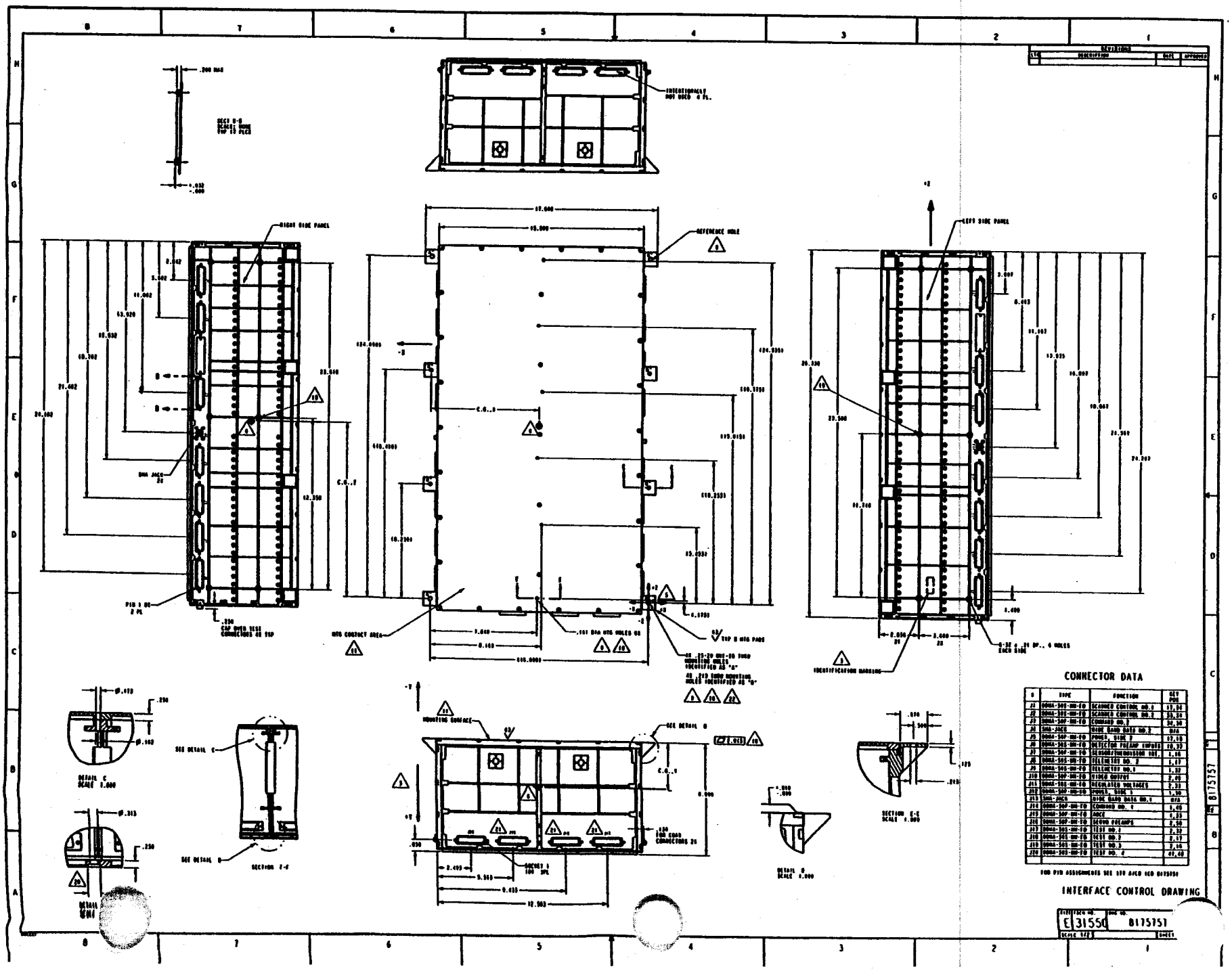


| # | TYPE | FUNCTION | REF PIN |
|---|---|---|---|
| J1 | 0004-303-HM-FO | SCANNER CONTROL NO.2 | 33,34 |
| J2 | 0004-303-HM-FO | SCANNER CONTROL NO.1 | 33,34 |
| J3 | 0004-307-HM-FO | COMMAND NO.2 | 34,40 |
| J4 | 0003-2ACS | DISK BAND DATA NO.2 | DTA |
| J5 | 0004-307-HM-FO | POWER, SIDE 2 | 17,18 |
| J6 | 0004-303-HM-FO | DETECTOR PREAMP SUPPLY | 20,37 |
| J7 | 0004-307-HM-FO | SCANNER/THERMOSTAT INT. | 1,16 |
| J8 | 0004-303-HM-FO | TELEMETRY NO. 2 | 1,17 |
| J9 | 0004-303-HM-FO | TELEMETRY NO.1 | 1,32 |
| J10 | 0003-307-HM-FO | VIDEO OUTPUT | 2,40 |
| J11 | 0004-303-HM-FO | REGULATED VOLTAGES | 2,33 |
| J12 | 0004-307-HM-FO | POWER, SIDE 1 | 1,38 |
| J13 | 0003-2ACS | DISK BAND DATA NO.1 | DTA |
| J14 | 0004-307-HM-FO | COMMAND NO. 1 | 1,40 |
| J15 | 0004-307-HM-FO | ADCS | 1,33 |
| J16 | 0004-307-HM-FO | SCANN PREAMPS | 3,40 |
| J17 | 0004-303-HM-FO | TEST NO.1 | 2,32 |
| J18 | 0004-303-HM-FO | TEST NO.2 | 2,17 |
| J19 | 0004-303-HM-FO | TEST NO.3 | 2,16 |
| J20 | 0004-303-HM-FO | TEST NO. 4 | 41,40 |

FOR PIN ASSIGNMENTS SEE 180 ACCD ICD B175751

Drawing 8175758 Sounder PDM Interface Control Drawing: Notes:

1. Only the item described on this drawing, when manufactured by ITT AFCD is approved by NASA for use in the applications specified herein. A substitute item shall not be used without prior testing and approval by NASA.

2. Performance per ITT AFCD specification 8175750. Electrical interface and connector pin assignments per ITT AFCD ICD 8175751.

3. Identification marking, where shown, as directed by ITT ICD 8175750.
   ITT part number 8017757501
   Serial Number
   FSCM 31550

4. For handling considerations, see the following:
   A) For static sensitive device handling, see ITT AFCD specification 8181870.
   B) For sensitive thermal control surfaces, see ITT AFCD specification 8180810.
   C) For handling and installation supplements, see ITT AFCD procedure 8150717.
   D) Contamination Control per ITT AFCD specification 8150000.

5. Coordinate system definition:

6. ⊕ Indicates Center of Gravity (for reference only). See ITT AFCD ICD 8175726 for nominal values. Actuals to be provided into final data package upon delivery of instrument.

7. Moments of Inertia Calculated about C.G.*xi per ITT AFCD ICD 8175751.

8. Weight per ITT AFCD ICD 8175754.

9. Interface mounting holes for 6-32 socket head screws to be drilled using ITT drill template 8150330 during satellite integration (to be provided to the satellite contractor).

10. Mount using six 06-32 fasteners (screwlocks).

11. Mounting surface area: 81.5 $in^2$.

12. Thermal mounting requirement: flush mount with DPU filler during satellite integration.

13. Thermal dissipation: See ITT AFCD ICD 8175726.

14. Finish: Black paint 2-306 except mounting surface. ε = 0.9. See note 20.

15. Specific Heat: See ITT AFCD ICD 8175726.

16. Qualification temperature: per ITT AFCD specification 8175750.

17. Average Bulk density: See ITT AFCD ICD 8175726.

18. D.C. power input from primary power bus: See ITT AFCD ICD 8175726
    For power loss, see Note 21.

19. Measured flatness around the perimeter to be less than 0.015.

20. Free of paint 0.5" diameter minimum.

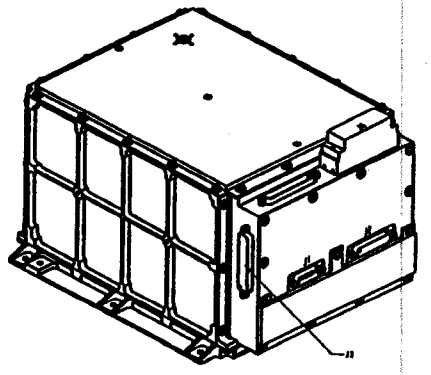


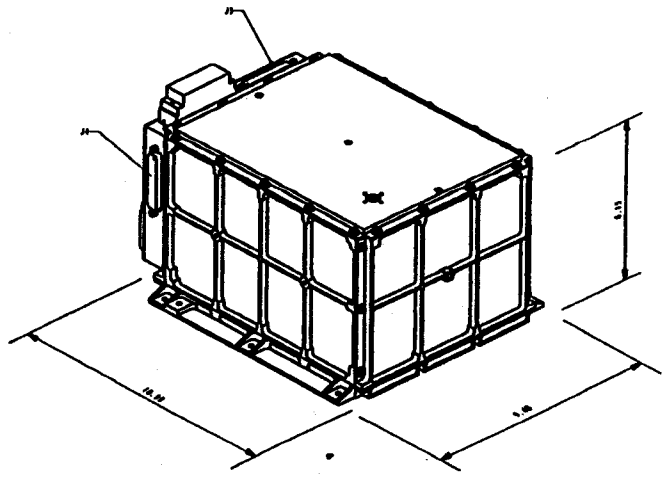


| REVISIONS | | | |
|---|---|---|---|
| LTR | DESCRIPTION | DATE | APPROVED |

| SHEET REVISION RECORD | |
|---|---|
| LTR | |
| SHEET 1 | |
| SHEET 2 | |
| SHEET 3 | |

MATERIAL

FINISH

NEXT ASSEMBLY USED ON
APPLICATION

UNLESS OTHERWISE SPECIFIED
TOLERANCES ON TO THREE DECIMALS
UNLESS OTHERWISE SPECIFIED
ON ANGLE FRACTIONS
DIMENSIONS ARE IN INCHES

DRAWN BY
CHECKED BY
ENGR
STAGE

DO NOT SCALE PRINT
SHOP PRACTICE, IF ANY APPLIES

PART OR IDENTIFYING NO.

NOMENCLATURE OR DESCRIPTION

LIST OF MATERIALS OR PARTS LIST

CONTRACT NO. NAS5-06000

APPROVALS
DRAWN BY
CHECKED BY
ENGR
STAGE

ITT AEROSPACE/COMMUNICATIONS DIVISION
FORT WAYNE, INDIANA, U.S.A.

MODULE, POWER
SUPPLY - SOUNDER

SIZE E
FSCM NO. 31550
DWG NO. 8175758
SCALE
SHEET 1 OF 1

8175758

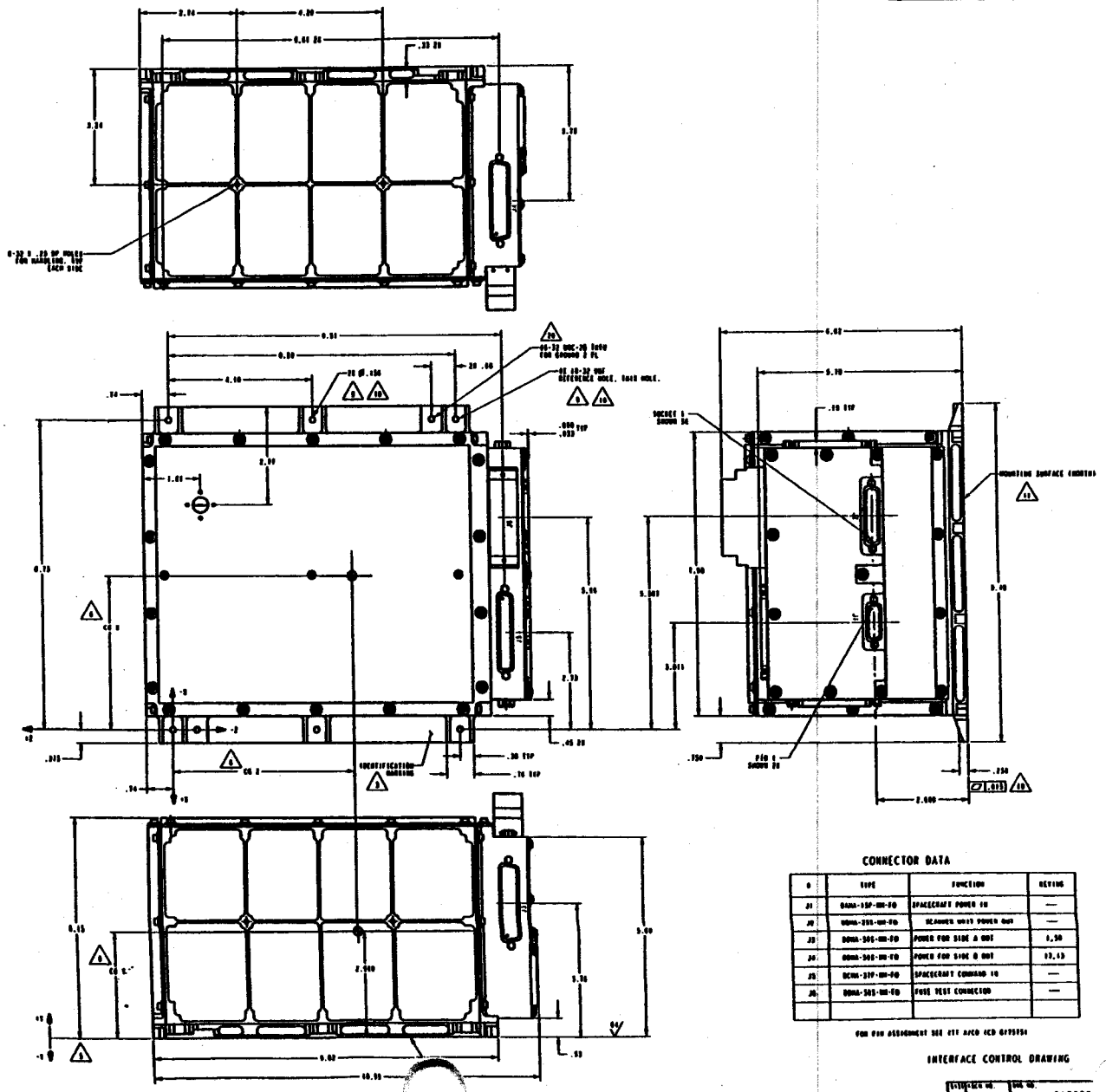


## CONNECTOR DATA

| # | TYPE | FUNCTION | RATING |
|---|---|---|---|
| J1 | DBMA-15P-NM-FO | SPACECRAFT POWER IN | — |
| J2 | DBMA-25S-NM-FO | SEAMUS UNIT POWER OUT | — |
| J3 | DBMA-50S-NM-FO | POWER FOR SIDE A OUT | 1,50 |
| J4 | DBMA-50S-NM-FO | POWER FOR SIDE B OUT | 10,13 |
| J5 | DCMA-37P-NM-FO | SPACECRAFT COMMAND IN | — |
| J6 | DBMA-50S-NM-FO | FUSE TEST CONNECTOR | — |

FOR PIN ASSIGNMENT SEE ITT ACCO ICD 6795951

INTERFACE CONTROL DRAWING

| | |
|---|---|
| E 31550 | 817575 |

S-415-25
ATTACHMENT E

# SOLAR X-RAY IMAGER (SXI) INTERFACE CONTROL DOCUMENT

# FOR

# GOES-N, O, P, Q SPACECRAFT

**August 21, 1997**

**NATIONAL AERONAUTICS AND SPACE ADMINISTRATION**
**GODDARD SPACE FLIGHT CENTER**
**GREENBELT, MARYLAND 20771**

Prepared By: Sandra A. Cauffman
GOES SEM & SXI Instrument Manager
Date 8/21/97

Approved By: Kenneth O. Schwer
GOES Observatory Manager
Date 8/26/97

Approved By: Martin A. Davis
GOES Project Manager
Date 8/26/97

# TABLE OF CONTENTS


LIST OF TABLES iv

LIST OF FIGURES v

LIST OF ACRONYMS vi

1. SCOPE 1

1.1 INTRODUCTION 1

1.2 INTERFACE CONFIGURATION MANAGEMENT 3

2. APPLICABLE DOCUMENTS 3

2.1 GOVERNMENT DOCUMENTS 3

2.2 REFERENCE DOCUMENTS. 3

3. INTERFACE REQUIREMENTS 4

3.1 GENERAL 4
3.1.1 FIELD OF VIEW 4
3.1.2 MOUNTING/INSTALLATION 4
3.1.3 ACCESS PROVISIONS 4

3.2 MASS PROPERTIES 4
3.2.1 MASS 4
3.2.2 CENTER OF GRAVITY 4
3.2.3 MOMENTS OF INERTIA 5

3.3 PHYSICAL INTERFACES 5
3.3.1 MECHANICAL 5
3.3.2 PHYSICAL ELECTRICAL INTERFACE 20

3.4 INTERFACE CHARACTERISTICS 21
3.4.1 MECHANICAL INTERFACE 21
3.4.2 MATERIAL, PARTS, AND PROCESSES REQUIREMENTS 26
3.4.3 THERMAL INTERFACES 26
3.4.4 CONTAMINATION CONTROL REQUIREMENTS 27
3.4.5 ELECTRICAL INTERFACE CHARACTERISTICS 28
3.4.6 ELECTROMAGNETIC COMPATIBILITY 37

3.5 INTEGRATION AND TEST REQUIREMENTS. 39
3.5.1 SXI MASS MODEL 39
3.5.2 PURGE GASES 39
3.5.3 TEST EQUIPMENT ELECTRICAL INTERFACE 39

4. GLOSSARY 42

# LIST OF TABLES


| No. | Title | Page No. |
|---|---|---|
| 3-1 | SXI Telescope Radiation Environment | 26 |
| 3-2 | Steady State Heat Flow to SC from SXI Electronics Boxes | 27 |
| B-1 | SXI Analog Telemetry | B-2 |
| B-2 | SXI Discrete (Type A) Telemetry | B-2 |
| B-3 | SXI Temperature Telemetry | B-2 |
| B-4 | Serial Telemetry | B-2 |
| B-5 | Command Signals Required for SXI Implementation | B-2 |

# LIST OF FIGURES


| No. | Title | Page No. |
|---|---|---|
| 1-1 | Schematic of the SXI Telescope | 2 |
| 3-1 | GOES-M Spacecraft, Launch (Stowed) Configuration | 7 |
| 3-2 | GOES-M Spacecraft South Panel | 8 |
| 3-3 | GOES-M Sun Pointing Platform with Instruments | 9 |
| 3-4 | Instrument Mounting Panel on GOES-M | 10 |
| 3-5 | GOES-M Solar Array Yoke Assembly | 11 |
| 3-6 | SXI Power Electronics Box Mounting Panel | 12 |
| 3-7 | SXI Data Electronics Box Mounting Panel | 13 |
| 3-8 | HASS Electronics Box Mounting Panel | 14 |
| 3-9 | SXI Telescope Envelope | 15 |
| 3-10 | SXI Power Electronics Box Static Envelope | 16 |
| 3-11 | SXI Data Electronics Box Static Envelope | 17 |
| 3-12 | SXI HASS Electronics Box Static Envelope | 18 |
| 3-13 | SXI Telescope Dynamic Envelope | 19 |
| 3-14a | SXI Telescope Acceptance Sine Vibration Environment | 23 |
| 3-14b | SXI Electronics Box Acceptance Sine Vibration Environment | 23 |
| 3-15a | SXI Telescope Acceptance Random Vibration Environment | 24 |
| 3-15b | SXI Electronics Box Acceptance Random Vibration Environment | 24 |
| 3-16 | Allowable Shock Environment for SXI | 25 |
| 3-17 | SXI/Spacecraft Electrical Interface | 29 |
| 3-18 | GOES-M Auto Load Group Control | 31 |
| 3-19 | Timing and Format of SXI Proportional CMD Data | 35 |
| 3-20 | GOES-M SC/SXI Grounding Interconnection | 38 |
| 3-21 | Test Equipment Electrical Interface | 39 |
| 3-22 | Schematic of the GSE Configuration for SXI/SC Interface Checkout | 40 |
| 3-23 | Schematic of the GSE Configuration for SXI Instrument-level Test | 40 |
| 3-24 | Schematic of the GSE Configuration for SXI Integration with SC | 41 |
| 3-25 | Schematic of On-Orbit SXI Operations | 41 |
| 4-1 | GOES-M Spacecraft, On Orbit (Deployed Configuration) | 43 |
| 4-2 | SXI Telescope Stowed in Spacecraft South Panel Cutout on GOES-M | 44 |
| 4-3 | GOES-M Solar Array Assembly Deployment Sequence | 45 |
| 4-4 | Accommodation of SXI on GOES-M | 46 |

# LIST OF ACRONYMS AND ABBREVIATIONS

| | |
|---|---|
| CCN | Contract Change Notice |
| CG | Center of Gravity |
| CMD | Command |
| DID | Dynamic Interaction Diagnostics |
| E-W | East-West |
| EGSE | Electrical Ground Support Equipment |
| EMC | Electromagnetic Compatibility |
| EMI | Electromagnetic Interference |
| EOL | End-Of-Life |
| FM | Flight Model |
| FOV | Fields of View |
| GFE | Government Furnished Equipment |
| GIMTACS | GOES I/M Telemetry and Command System |
| GOES | Geostationary Operational Environmental Satellite |
| GSFC | Goddard Space Flight Center |
| HASS | High Accuracy Sun Sensor |
| HVPS | High Voltage Power Supply |
| ICD | Interface Control Document |
| IMP | Instrument Mounting Panel |
| IRD | Interface Requirement Document |
| ISAGE | Imager/Sounder Analysis Ground Equipment |
| MDL | Multi-use Data Link |
| MLI | Multi-layer Insulator |
| MM | Mass Model |
| MOI | Moment of Inertia |
| MSFC | Marshall Space Flight Center |
| NASA | National Aeronautics and Space Administration |
| N-S | North-South |
| NVR | Non-Volatile Residue |
| OGE | Operational Ground Equipment |
| PAML | Program Authorized Material List |
| PCM | Pulse Code Modulation |
| PCU | Power Control Unit |
| SA | Solar Array |
| SADA | Solar Array Drive Assembly |
| SADE | Solar Array Drive Electronics |
| SAS | Sun Analog Sensor |
| SATTDE | Solar Array & Trim Tab Drive Electronics |
| SC | Spacecraft |
| SOCC | Spacecraft Operations Control Center |
| SPDT | Single Pole Double Throw |
| SPP | Sun Pointing Platform |
| SXI | Solar X-ray Imager |
| TACTS | Telemetry Acquisition And Command Transmission System |
| TLM | Telemetry |
| TTL | Transistor-to-Transistor Logic |
| TV | Thermal Vacuum |
| XRP | X-ray Positioner |
| XRS | X-ray Sensor |
| XRPE | XRP Electronics |

# 1. SCOPE

This document, the Solar X-ray Imager (SXI) Interface Control Document (ICD) for the GOES-N, O, P, Q Spacecraft, contains the SXI technical interface requirements for the Geostationary Operational Environmental Satellite (GOES). For clarity, the Spacecraft (SC)-side of the SC-SXI interface in this document is referenced to the GOES-M SC, wherever possible. This is clearly stated in figures, and implied in the other descriptions of the SC-SXI interface. This information is provided in order to enable the GOES-N, O, P, Q offeror to determine and understand the nature of the SC-SXI interface. For the GOES-N, O, P, Q program, the SC offeror shall provide an attachment interface that is compatible with the SXI hardware and software whose characteristics are described in this document. After the award of the SC contract, the SC contractor, in collaboration with the SXI instrument contractor and GSFC, shall optimize, define, and document all the SXI interface requirements in the SXI Interface Control Document (ICD).

## 1.1 INTRODUCTION

The Solar X-ray Imager (SXI) will be used to observe the size, temperature, morphology, and complexity of solar active regions. Changes in these characteristics will be used to predict the rate of growth of solar active regions and the probability that the regions may flare. The SXI will be used to meet several operational requirements for predicting and alerting customers of solar-terrestrial events:

1. SXI will be used to locate coronal holes for prediction of high speed solar wind streams causing recurrent geomagnetic storms. These weakly emitting features are good predictors of geomagnetic storms for the years near minimum solar activity when long-lived holes are present on the Sun.
2. SXI will be used to locate the position of solar flares. Their locations, both on the disk and beyond the west limb, are used to predict the magnitude of particle events.
3. SXI will be used to identify solar activity rotating onto the disk from the east limb. Enhanced emission above the limb provides information about solar activity occulted by the solar disk at other wavelengths.
4. SXI will be used to monitor the Sun for evidence of coronal mass ejections (CMEs), which are associated with geomagnetic storms. Large-scale, long-duration, possibly weak brightenings of coronal filament arcades are expected to provide indications of CME occurrences.

The SXI is part of the Space Environment Monitoring (SEM) suite of instruments. The SXI system consists of a telescope and three electronics boxes. The telescope consists of an X-ray image detector, an optical system for focusing an image of the Sun onto the detector through any one of a set of filters, interfaces to SC telemetry, controls for automatically executing an image sequence, power and command subsystems, and a High Accuracy Sun Sensor (HASS) to monitor the solar aspect angles relative to the instrument line-of-sight at image integration time. A conceptual drawing of the SXI telescope is shown in Figure 1-1. The X-ray image data transmitted from the SC, at the rate of at least one image per minute, permits the reconstruction of near-real-time solar images in the 6 - 60 Angstroms (photon energy 2000 - 200 eV) range. The GOES-M/SXI electronics consists of a Data Electronics Box (DEB), a Power Electronics Box (PEB), and a HASS Electronics Box (HEB).

Ground Support Equipment (GSE), both electrical and mechanical, is required to support testing and for on-orbit performance validation. The SC shall provide a mechanism for pointing the SXI boresight to the center of the solar disk.

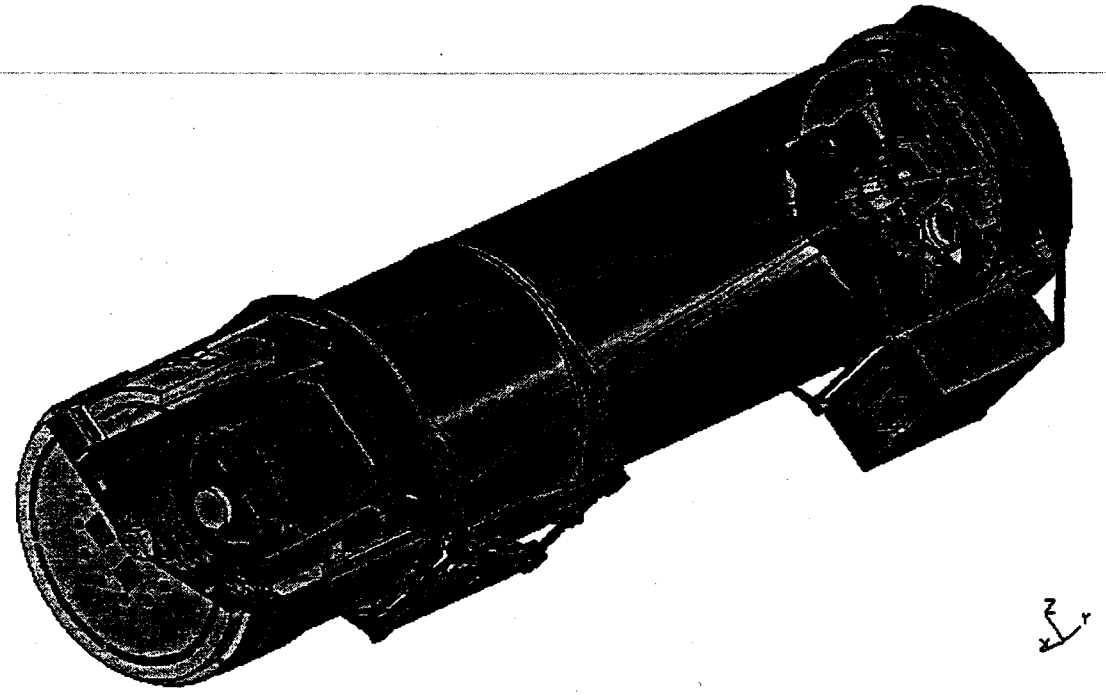

Figure 1-1: Schematic of the SXI Telescope

## 1.2 INTERFACE CONFIGURATION MANAGEMENT

The configuration management/control of this document will be maintained by GOES Project Configuration Control. Additions, deletions, or modifications to this document may be initiated by any participating agency by submittal and approval of a Contract Change Notice (CCN) or technical directive.

# 2. APPLICABLE DOCUMENTS

The following documents form a part of the requirement to the extent specified herein.

## 2.1 GOVERNMENT DOCUMENTS

The following documents, of the exact issue shown, form a part of this ICD. In the event of conflict between documents referenced herein and the contents of this document, the latter shall be considered a superseding requirement, unless otherwise specified.

| Document | Title |
|---|---|
| MIL-B-5087B | Bonding, Electrical, and Lightning Protection for Aerospace Systems |
| MIL-STD-461C | Electromagnetic Emission and Susceptibility Requirements for the Control of Electromagnetic Interference |
| MIL-STD-462 | Electromagnetic Interface Characteristics, Measurement of (Ref) |
| MIL-STD-463 | Definitions and System of Units, Electromagnetic Interface and Electromagnetic Compatibility Technology (Ref) |
| MIL-STD-1541 | Electromagnetic Compatibility Requirements for Space Systems |

## 2.2 REFERENCE DOCUMENTS.

| Document | Title |
|---|---|
| X-900-93-03 | Charged Particle Radiation Exposure of Geostationary Orbits |
| EIA-422 | Electrical Characteristics of Balanced Voltage Digital Interface Circuits |
| EIA/IA-530-A | High Speed 25-Position Interface for Data Terminal Equipment and Data Circuit-Termination Equipment, Including Alternative 26-Position Connector |
| S-415-13 | Statement of Work (SOW) for the GOES-NO/PQ Solar X-ray Imager (SXI) |
| S-415-15 | Contract Documentation Requirements List (CDRL) for the GOES-NO/PQ Solar X-ray Imager (SXI) |
| S-415-17 | Performance Requirements Document for the GOES- NO/PQ Solar X-ray Imager (SXI) |
| S-415-20 | Configuration Management Requirements for the GOES-NO/PQ Solar X-ray Imager (SXI) |
| S-415-21 | Work Breakdown Structure (WBS) Dictionary for GOES NO/PQ Solar X-ray Imager (SXI) |
| S-415-22 | Performance Specification for Geostationary Operational Environmental Satellite |
| S-415-26 | Contract Data Requirements List for the Geostationary Operational Environmental Satellite |

# 3. INTERFACE REQUIREMENTS

## 3.1 GENERAL

### 3.1.1 FIELD OF VIEW

The SC-SXI interface shall provide the SXI with an unrestricted field of view to the Sun at all times, with the exception of during non-spacecraft-induced eclipses along the line-of-sight to the Sun.

### 3.1.2 MOUNTING/INSTALLATION

The SC contractor shall select the location for the telescope and electronics boxes on the SC and accommodate the SXI hardware described below. The SC contractor shall design the mounting interface and develop installation procedures in collaboration with the SXI instrument contractor. The mounting details shall be documented in the SXI ICD. The SC contractor shall perform the mounting and installation of the SXI hardware on the SC. The telescope and the electronics boxes shall be mounted in close proximity.

### 3.1.3 ACCESS PROVISIONS

The SC contractor shall make available physical access to the SXI and its test points for testing at the SC Contractor's facility and at the launch site (Payload Processing Facility), as well as for cleaning and verification of cleanliness levels and potential pre-filter changeout. Purge and vacuum apparatus, and auxiliary power cable for the SXI (if any) shall be furnished by the Instrument Contractor.

## 3.2 MASS PROPERTIES

### 3.2.1 MASS

The masses for the SXI telescope and the electronics boxes are as follows:

| COMPONENT | MAXIMUM MASS |
|---|---|
| SXI Telescope | 34.5 lb (15.6 Kg) |
| SXI Electronics Boxes | 31.9 lb (14.4 Kg) |
| HASS Electronics Box | 4.0 lb (1.8 Kg) |

### 3.2.2 CENTER OF GRAVITY

The center of gravity (CG) of SXI Telescope, as measured from the XRP Rotation Axis on IMP on GOES-M, is boxed in as follows:

$X_{CG}$ = -5.05" ±1.45"
$Y_{CG}$ = 1.09" ±0.75"
$Z_{CG}$ = 3.97" +1.06/-0.75"

### 3.2.3 MOMENTS OF INERTIA

The SC shall accommodate an SXI design with the following values for various moments of inertia (MOI) of the SXI Telescope measured about the telescope CG:

$I_{XX} = 439$ lb-in$^2$,
$I_{YY} = 4300$ lb-in$^2$,
$I_{ZZ} = 4201$ lb-in$^2$.

## 3.3 PHYSICAL INTERFACES

### 3.3.1 MECHANICAL

#### 3.3.1.1 GOES COORDINATE SYSTEM

The coordinate systems in this document are defined relative to the GOES-M SC coordinate system shown in Figures 3-1 and 3-2. The origin of GOES-M SC coordinate system is located at the center of the separation plane (from the launch vehicle). **Unless otherwise noted, all SC coordinate system references in this document in regards to SXI shall correspond to the stowed (launch) configuration as shown in Figure 3-1.** Figure 3-1 also shows the relationship between nominal on-orbit direction vectors (north, south, east, west) and SC coordinate system.

#### 3.3.1.2 ATTACHMENT INTERFACE DETAIL.

The attachment interface details presented below are with respect to the GOES-M SC. The GOES-NOPQ SC contractor shall accommodate the SXI system with the envelopes and environments defined below. The envelopes given in this document represent the minimum the SC shall provide the SXI system with the margins as specified in Section 9.4.2.1 of the Performance Specification for the Geostationary Operational Environmental Satellite, document no. S-415-22. For the GOES-NOPQ program the SC contractor shall provide an attachment interface that can accommodate the SXI hardware described in the following subsections.

The SC contractor shall provide the mounting hardware and grounding straps required for mounting and grounding the SXI Telescope and the SXI Electronics Boxes to their respective mounting panels on the SC.

##### 3.3.1.2.1 SXI TELESCOPE

The SXI Telescope is mounted to the Instrument Mounting Panel (IMP) on GOES-M and the IMP is integrated to the SC via a Sun Pointing Platform (SPP), shown in Figure 3-3. Figure 3-4 shows the details of the GOES-M IMP. The SC contractor shall design the SC-SXI telescope physical interface satisfying the field-of-view requirement stated in Section 3.1.1 in this document, and the pointing and stability requirements stated in 9.4.6 of the Performance Specification for Geostationary Operational Environmental Satellite, document no. S-415-22.

3.3.1.2.2 ELECTRONICS BOXES

Figure 3-5 shows the location of the SXI Electronics Boxes on Electronics Mounting Panels on the Solar Array Yoke on GOES-M and Figures 3-6, 3-7, and 3-8 show the Electronics Box Mounting Panels. The GOES-NOPQ SC contractor shall select the locations for the SXI electronics boxes on the SC, satisfying the SXI electronics box mounting requirements.

3.3.1.2.3 GROUNDING

The SC shall provide a low noise grounding for the SXI that is compatible with the requirements of Section 10.5.6 of the Performance Specification for Geostationary Operational Environmental Satellite, document no. S-415-22.

3.3.1.3 ENVELOPES

3.3.1.3.1 SXI TELESCOPE STATIC ENVELOPE

The SXI Telescope static envelope is shown in Figure 3-9. The SC-SXI interface shall provide an additional 0.5" on each side of this envelope (a total of 1.0" on length, 1.0" on width, etc.) to facilitate the installation of MLI blankets, electrical connectors (from both the SXI Telescope and the harness), harness supports, and portion of the harness supported by harness supports.

3.3.1.3.2 ELECTRONICS BOX STATIC ENVELOPE

The electronics boxes on GOES-M are mounted on the SA Yoke as shown in Figure 3-5. The GOES-NOPQ SC-SXI interface shall accommodate the static envelopes shown in Figures 3-10, 3-11, and 3-12 for the electronics boxes, including mounting feet and the grounding hardware.

3.3.1.3.3 SXI TELESCOPE DYNAMIC ENVELOPE

The SXI-SC interface shall accommodate the SXI telescope dynamic envelope shown in Figure 3-13. The SC-SXI interface shall provide an additional 0.5" on each side of this envelope as stated in 3.3.1.3.1.

3.3.1.4 INTERFACE ALIGNMENT

The SXI Telescope will be delivered to the SC contractor with alignment references (e.g., alignment mirrors, or surfaces, or a combination of both), with respect to which all alignment measurements shall be made during the SXI mechanical integration with the SC. The requirement on the SXI instrument contractor is to provide alignment references that is optically flat to within one quarter (1/4) of 5461 angstroms (5461/4 angstroms), to fit within the SXI Telescope static envelope defined in section 3.3.1.3.1, and to provide the alignment data to the SC Contractor. The SC shall meet the SC-SXI mechanical interface requirements stated in Document No. S-415-22, Performance Specification for GOES-N,O, P, Q Spacecraft.

3.3.1.5 SXI POINTING REQUIREMENTS

The SC shall meet the SXI pointing requirements stated in Document No. S-415-22, Performance Specification for GOES-N,O, P, Q Spacecraft.

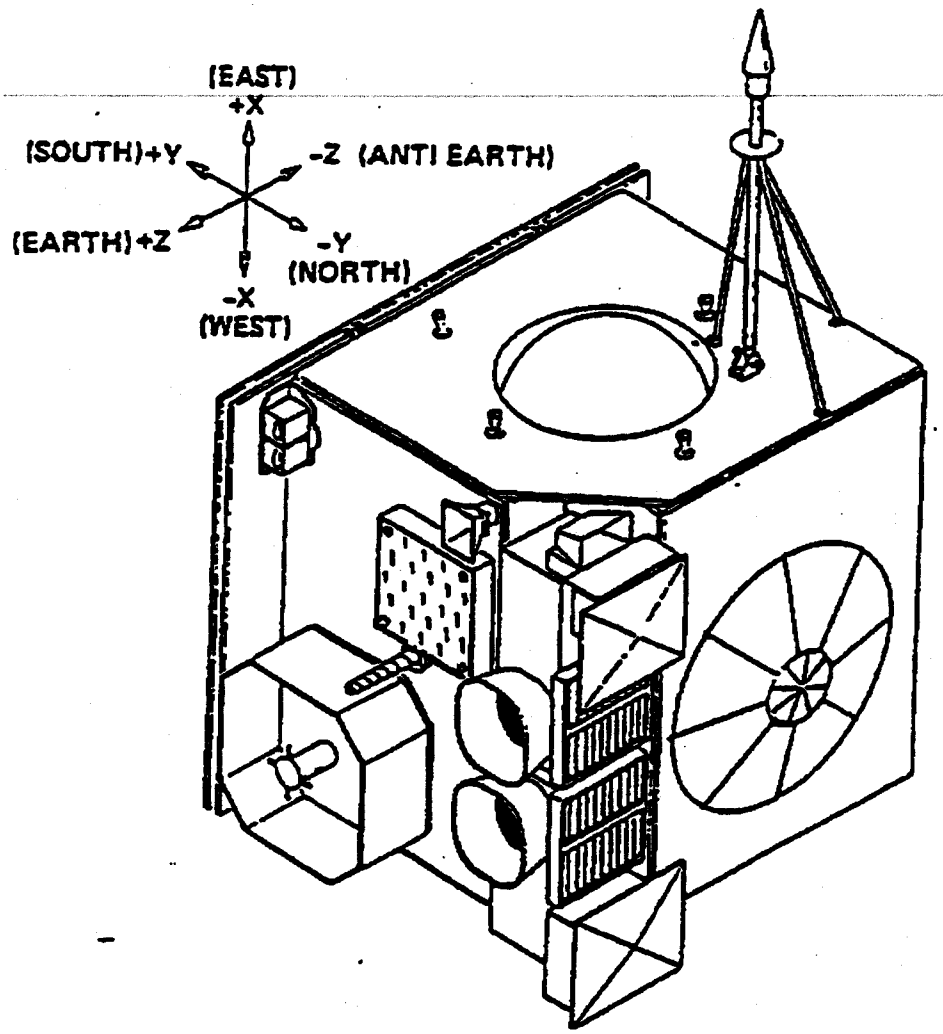


Figure 3-1: GOES-M Spacecraft, Launch (Stowed) Configuration

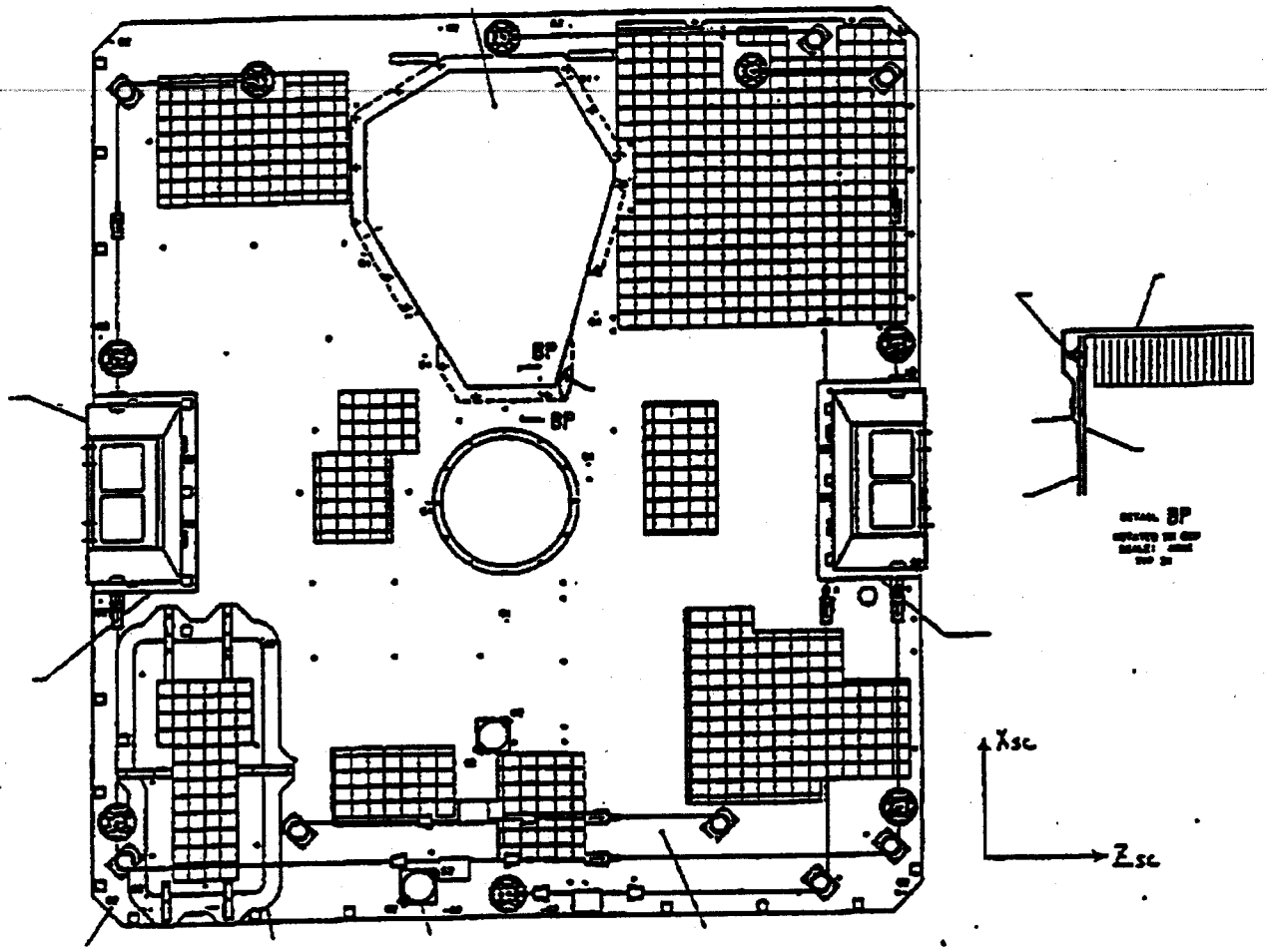


Figure 3-2: GOES-M Spacecraft South Panel

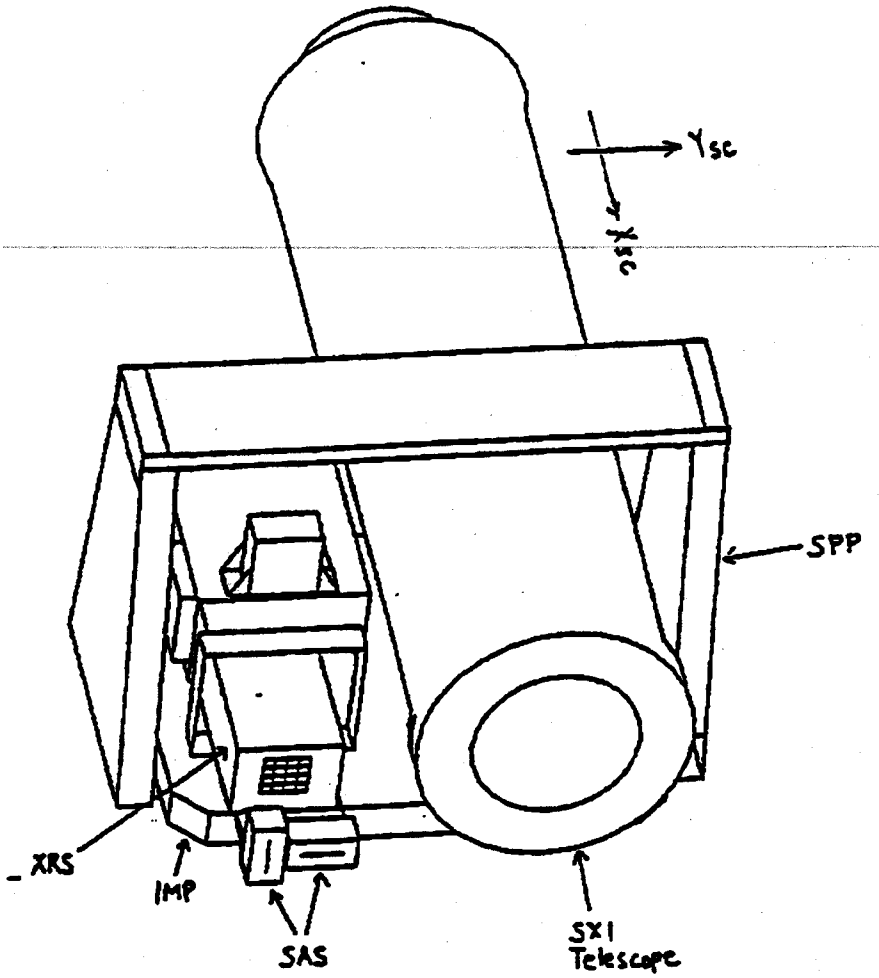


Note: The coordinate system shown above corresponds to the launch (stowed) configuration of the spacecraft defined in Figure 3-1

Figure 3-3: GOES-M Sun Pointing Platform with Instruments

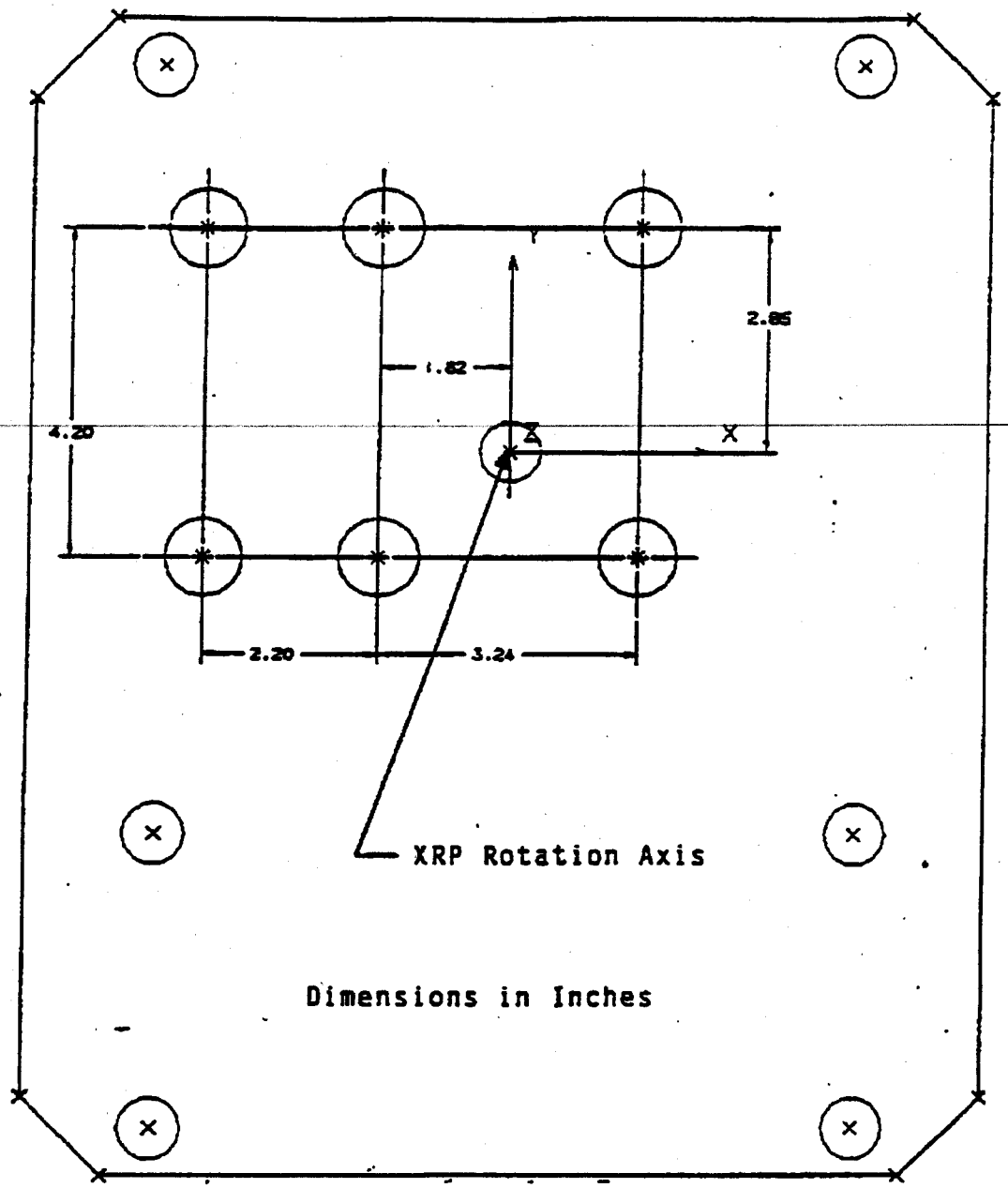


(1) Mounting hole locations on the SXI Telescope mounting bracket shall be true position to 0.005 inches, regardless of feature size.

(2) Grounding location on the IMP is TBD.

Figure 3-4: Instrument Mounting Panel on GOES-M

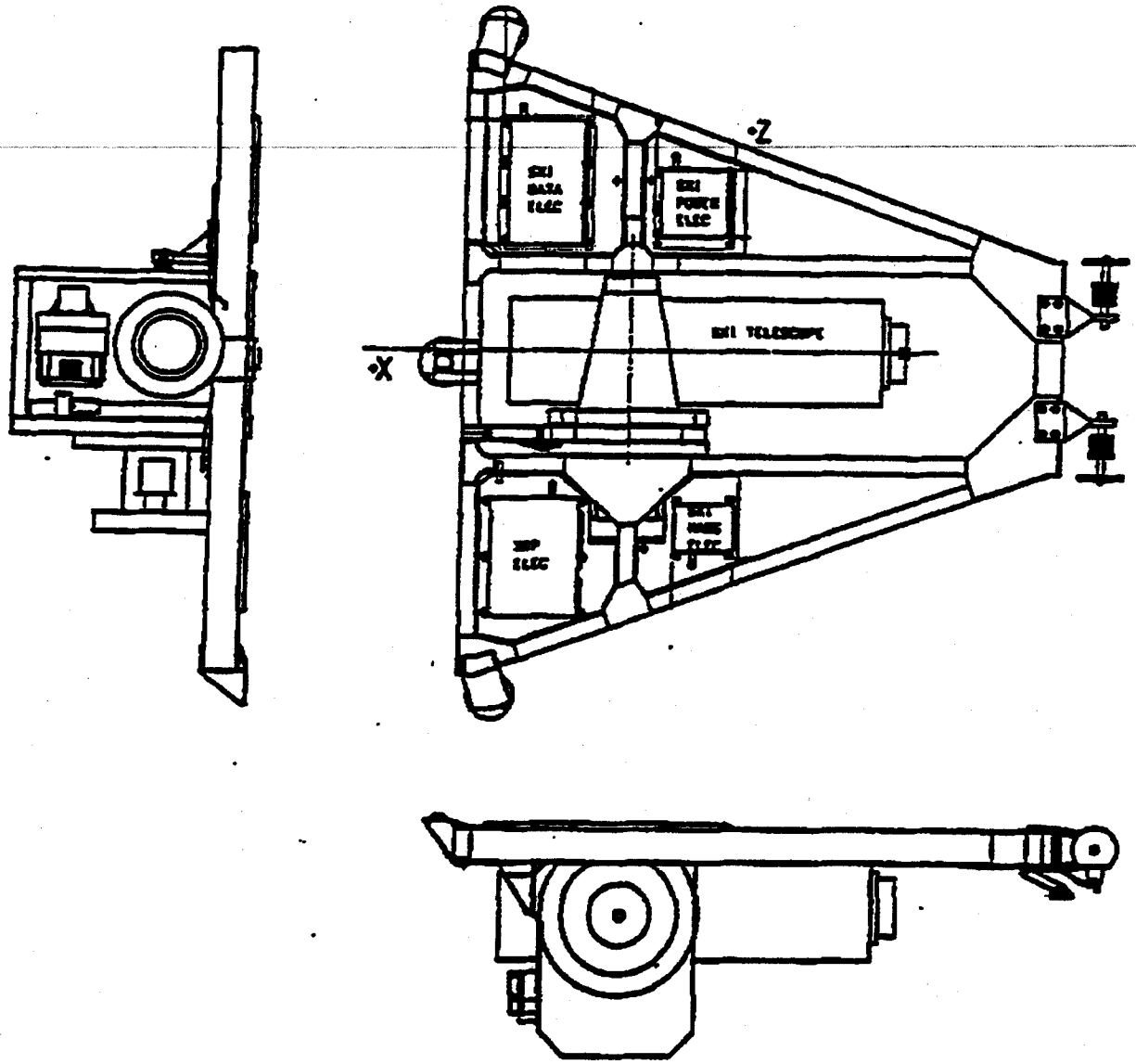


Figure 3-5: GOES-M Solar Array Yoke Assembly

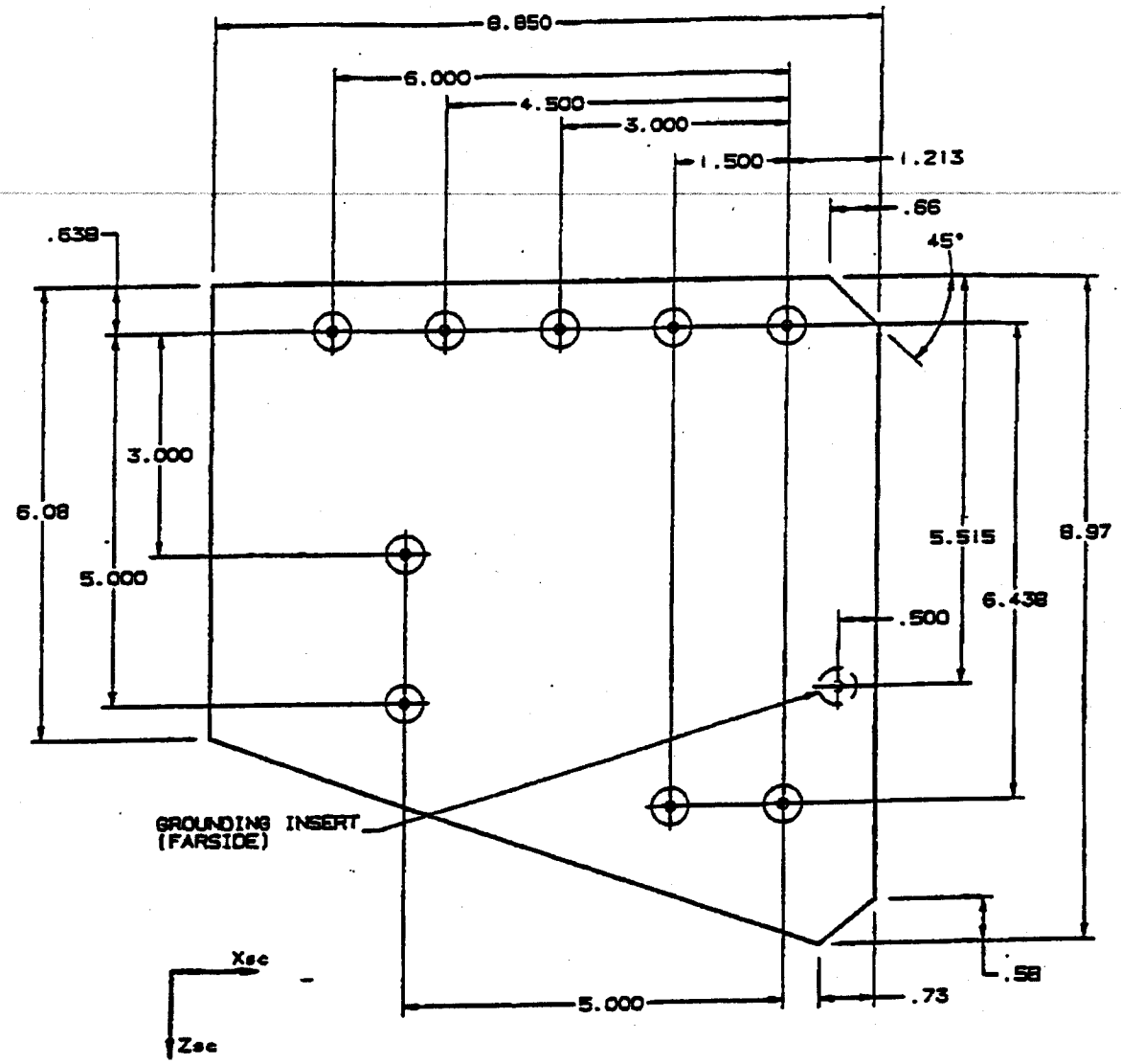


Figure 3-6: SXI Power Electronics Box Mounting Panel (Dimensions in Inches)

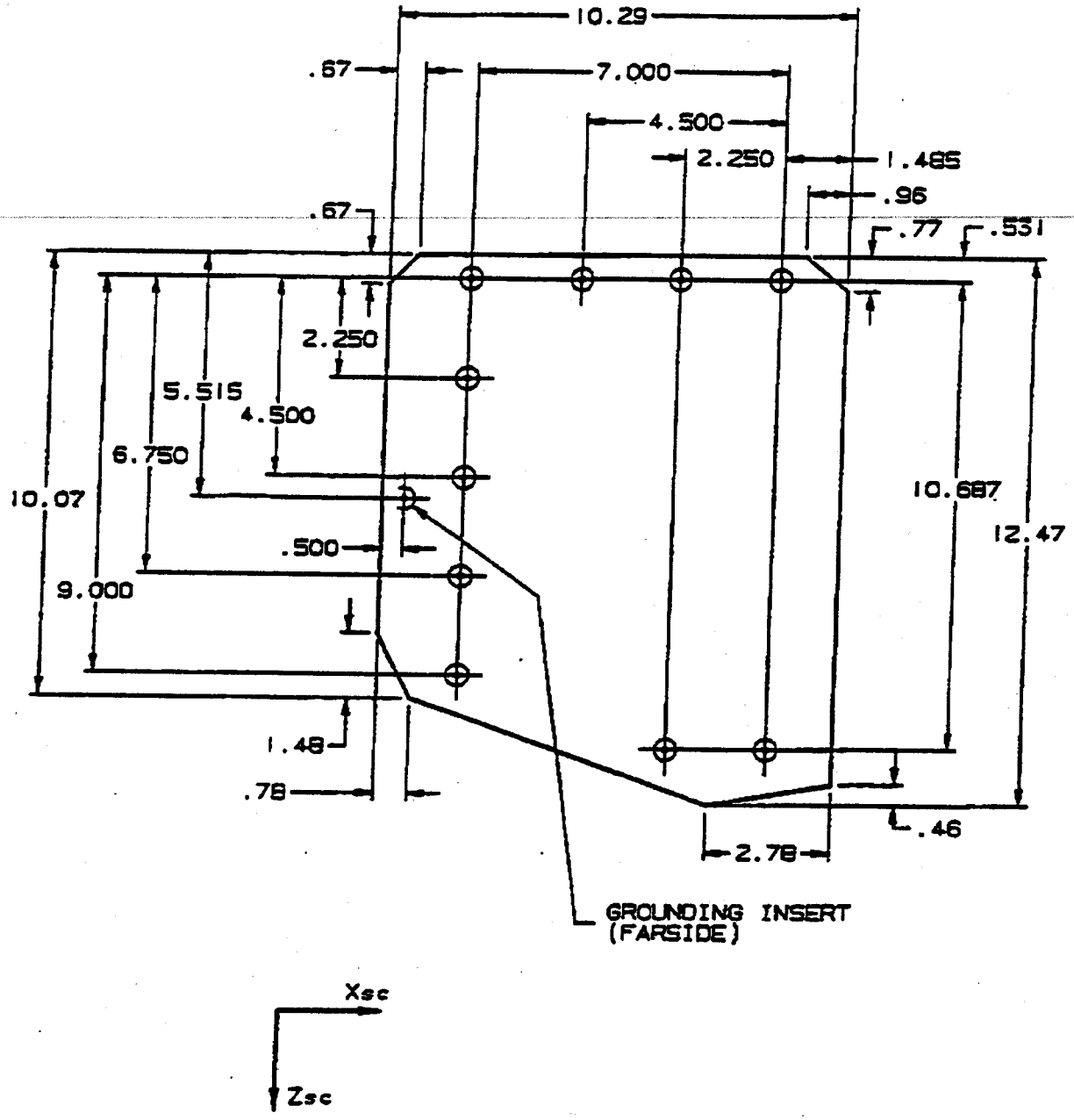


Figure 3-7: SXI Data Electronics Box Mounting Panel (Dimensions in Inches)

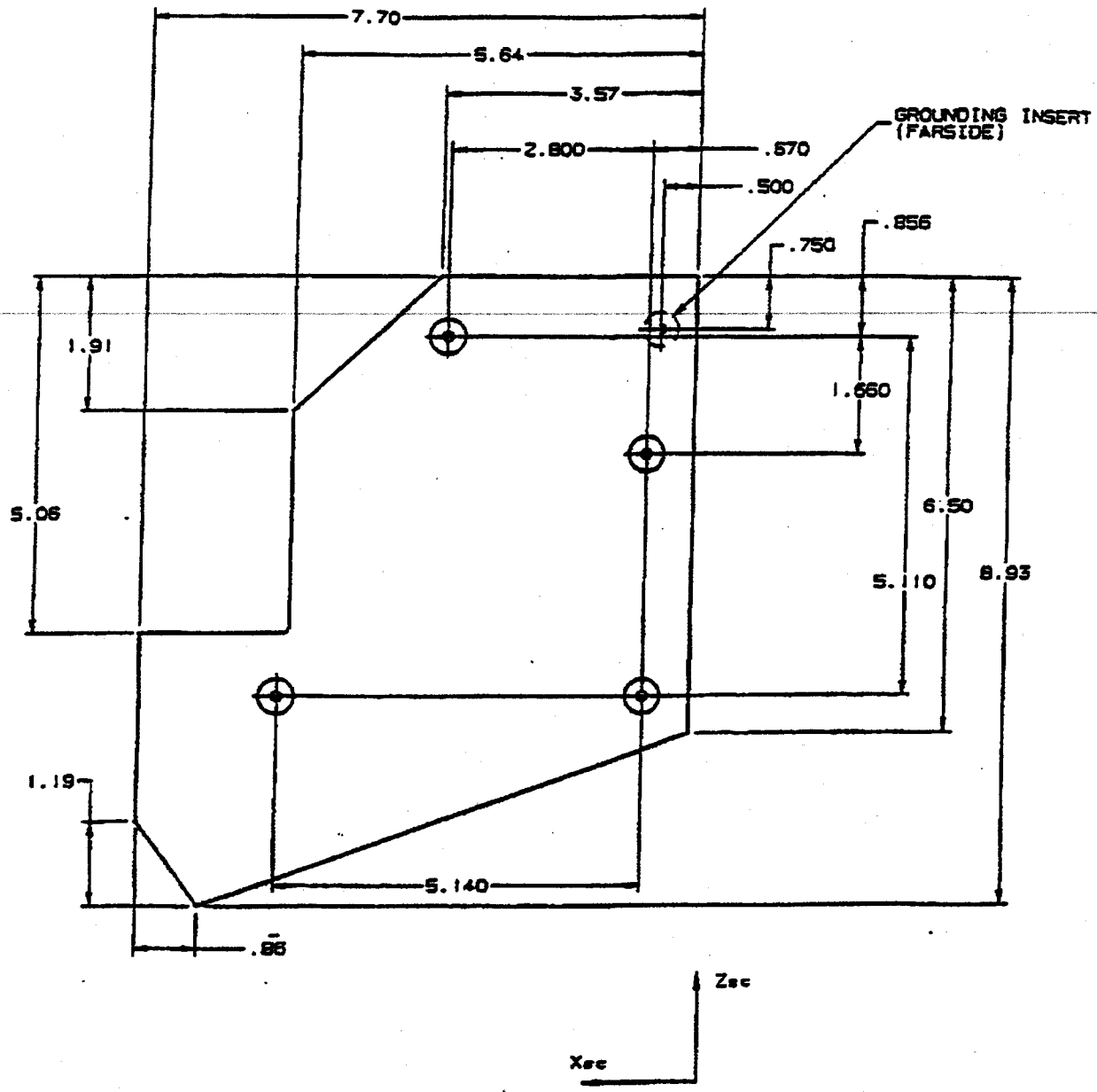


Figure 3-8: HASS Electronics Box Mounting Panel

NOTE: The expanded MLI for the SXI Telescope must fit within the envelope, except for following:

(1) MLI on the Mirror Shroud adjacent to the XRS/SAS - 0.25 inch violation of the envelope by the MLI is allowed in this area, provided that all hard points (non-MLI points) clears the envelope by at least 0.25 inch.

(2) MLI around the mirror mounting screw on the Mirror Shroud, away from the XRS/SAS (180 degrees from the location (1) above) - 0.25 inch violation of the envelope by the MLI is allowed in this area, provided that all hard points clears the envelope by at least 0.25 inch.

(3) MLI violating the envelope per (1) and (2) are subject to be compressed.

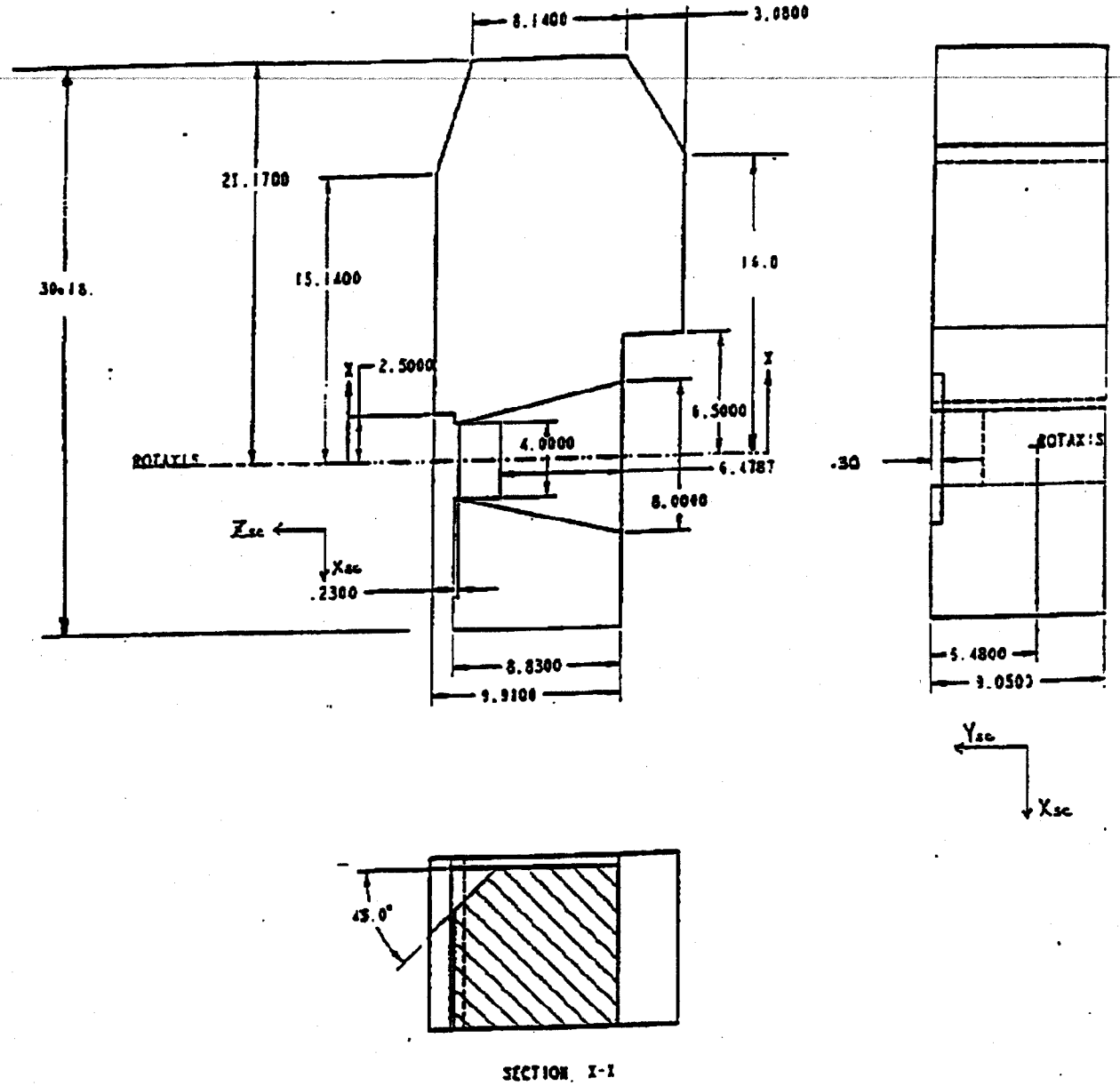


Figure 3-9: SXI Telescope Envelope

Note: Dimensions without MLI

Additional Requirements:

- Mounting Feet are to be within the envelope
- Approximate height of 3 inches
- Additional 3 inch clearance required for connectors

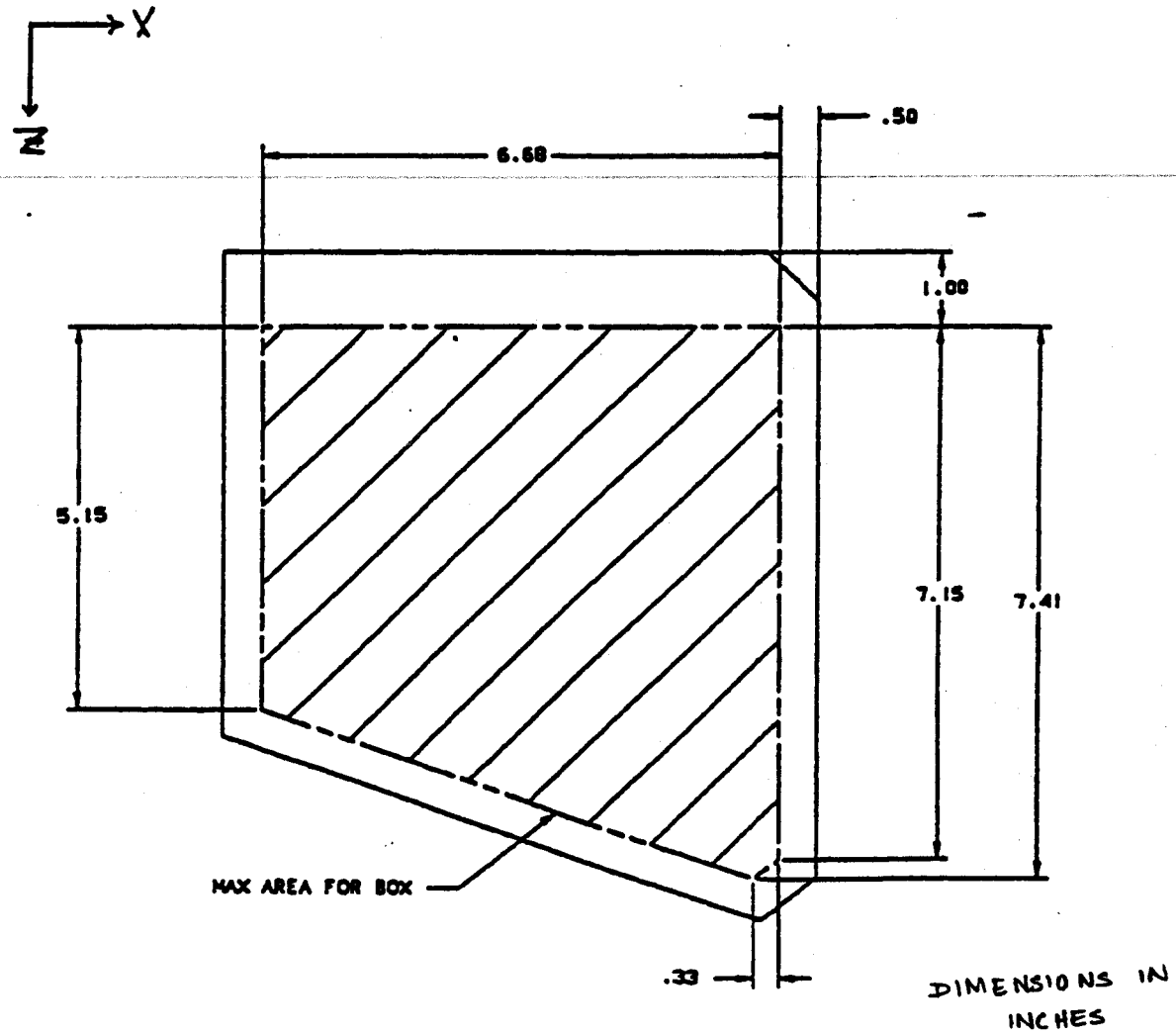


Figure 3-10 SXI Power Electronics Box Static Envelope

Note: Dimensions without MLI

Additional Requirements:

- Mounting Feet are to be within the envelope
- Approximate height of 3 inches
- Additional 3 inch clearance required for connectors

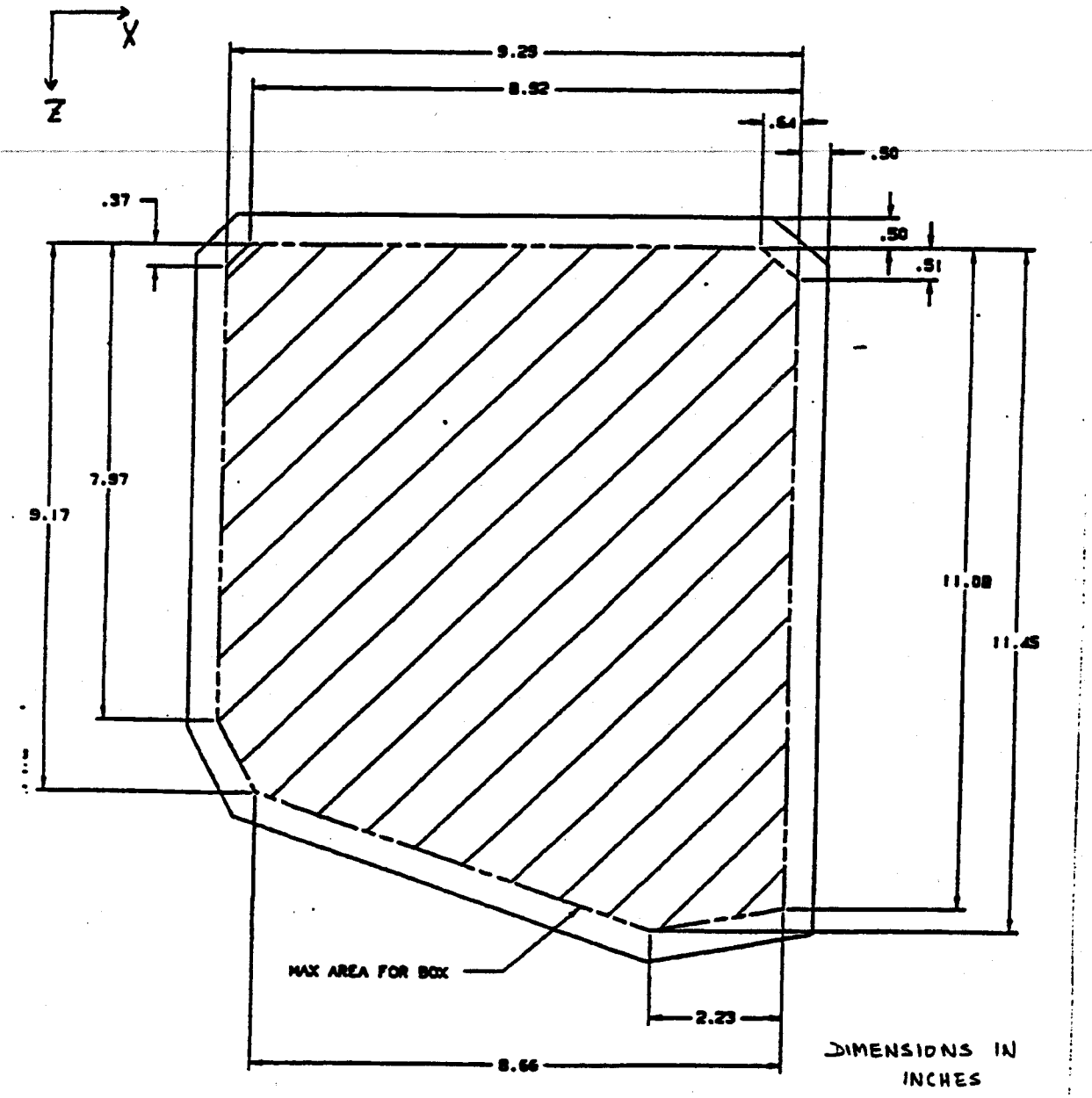


Figure 3-11: SXI Data Electronics Box Static Envelope

Note: Dimensions without MLI

Additional Requirements:

- Mounting Feet are to be within the envelope
- Approximate height of 3 inches
- Additional 3 inch clearance required for connectors

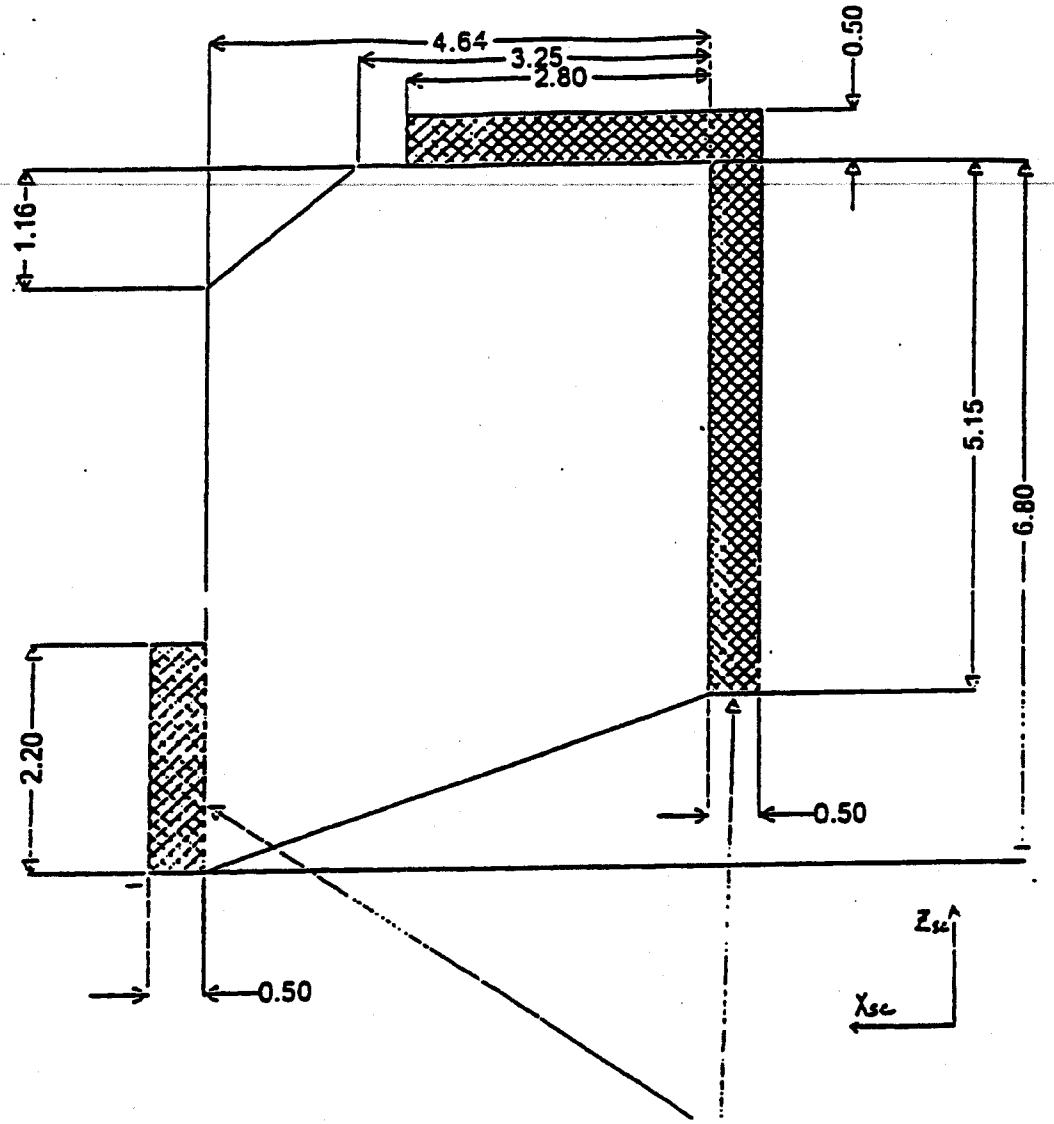


Allowable Area for Mounting Feet/Flange

all dimensions in inches

Figure 3-12: SXI HASS Electronics Box Static Envelope

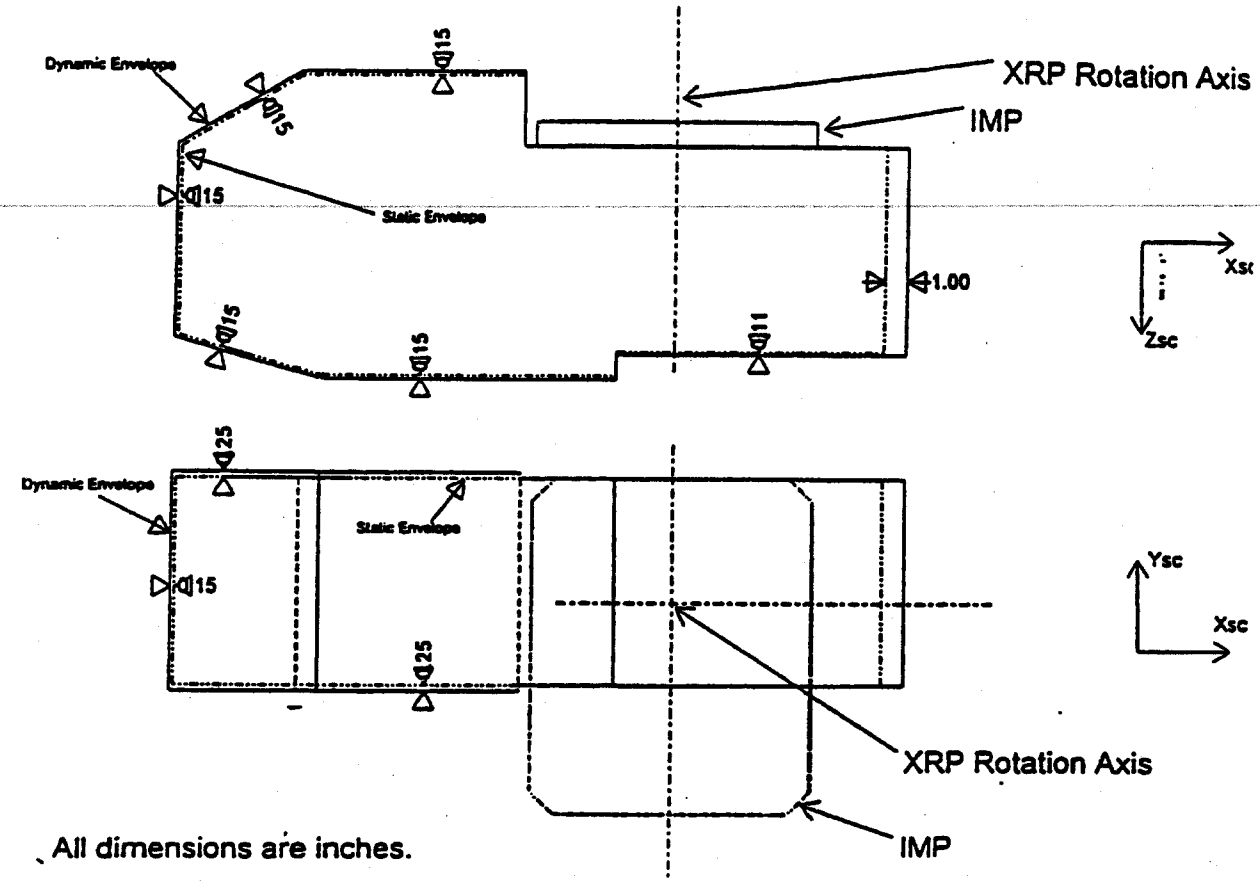


Figure 3-13: SXI Telescope Dynamic Envelope (shown relative to the static envelope of Figure 3-9)

### 3.3.2 PHYSICAL ELECTRICAL INTERFACE

The SC shall accommodate the SXI electrical interface detailed in Appendix A. All electrical interface connections shall be designed to preclude incorrect electrical interface connection (using keyed components, for example).

#### 3.3.2.1 CABLES AND HARNESSES

The SC contractor shall provide the SC-SXI interface with the cabling configuration depicted in Appendix A. The SC contractor shall design, fabricate/supply and install, per SXI instrument contractor's specification on electrical interface, all the flight cables and harnesses interfacing the telescope and the three electronics boxes, in addition to the harnessing necessary to connect the SXI with the SC subsystem. The SC contractor shall be responsible for the specification on mechanical interface, including but not limited to, cable lengths and cable routing, and the installation of these cables on the SC. The SC contractor shall document the harness design and drawings in the SXI ICD.

#### 3.3.2.2 TEST CABLES AND HARNESSES

The SC Contractor shall supply all the SC-to-SXI interface and intra-SXI cables, harnesses and connectors (both halves) for SXI development tests involving the Engineering Model. Test cables shall be as identical to the flight cables as practicable. The SC contractor shall also supply a flight harness to support the functional and environmental tests of the FM SXIs.

#### 3.3.2.3 ELECTRICAL CONNECTORS

The following requirements are applicable.

a. The SC contractor shall key all SXI connectors of the same type that will be mated and de-mated by the SC Contractor to prevent incorrect connection.
b. The SC Contractor shall provide both halves of the interface connectors attached to the SC Contractor-supplied harnesses per the Instrument Contractor's specification. The harness-to-connector interfaces of the SC Contractor-supplied harnesses shall be wrapped with flexible shield tape.
c. Connector potting is not required in general. Potting is recommended in the following instances:
    1. High voltage harnesses/connectors.
    2. Coaxial connections which protrude beyond the connector grommet.
    3. Other special cases where potting is required to assure the mechanical integrity of each harness/connector under S/C assembly, testing, thermal/vacuum, and during Sun tracking.

#### 3.3.2.4 CONNECTOR PINS

The following requirements are applicable to all connectors mating to the SXI.

a. Separate connector pins shall be provided for the following:
   1. Primary power circuit returns
   2. Signals and secondary power circuit returns
   3. Chassis ground
b. Primary power bus, power return, and high (above primary power bus) voltage connector pins shall be separated by an unused connector pin.
c. Any connector that has main bus voltage shall also have a minimum of two main bus return pins, and two main bus returns shall be provided in the connector which contains the electronics ON/OFF command.
d. Connector pins shall be assigned to circuits in a manner that will minimize undesirable coupling between circuits.
e. Each interface connector shall include a minimum of 10% of the pins as spares.

## 3.4 INTERFACE CHARACTERISTICS

### 3.4.1 MECHANICAL INTERFACE

#### 3.4.1.1 GENERAL DESIGN REQUIREMENTS

The base surface flatness of the SC-side interface provided to each SXI Electronics Box shall be 0.010 inch total or better. The SC contractor shall provide a total base surface flatness of 0.001 inch or better for the Instrument Mounting Panel.

#### 3.4.1.2 ENVIRONMENTS

The SC shall not subject the SXI to environments worse than those given below, either during tests or launch. Unless noted otherwise, the environments specified are at the mounting interface.

##### 3.4.1.2.1 QUASI-STATIC LOAD FACTORS

Quasi-static limit load factors are as follows. These load factors, which are to be applied one axis at a time at the SXI telescope attachment location, include three translational accelerations and two rotational accelerations. The Y and Z rotational accelerations are to be applied so as to increase the corresponding Z and Y translational accelerations at the aft end of the telescope. Note that the coordinate axes are referenced to the SC launch configuration shown in Figure 3-1.

| Load Direction | Quasi-static Limit Load Factor |
|---|---|
| X | 15.0 g |
| Y | 10.0 g |
| Z | 10.0 g |
| Theta Y | 1.35 g/inch |
| Theta Z | 1.35 g/inch |

The quasi-static limit load factors for SXI Electronic Boxes are 15 g's in each of X, Y and Z directions.

3.4.1.2.2 SINE VIBRATION

The sine vibration environments for the SXI telescope and the electronics boxes shall be no worse than those shown in Figures 3-14a and 3-14b.

3.4.1.2.3 RANDOM VIBRATION

The random vibration environments for the SXI telescope and the electronics boxes shall be no worse than those shown in Figures 3-15a and 3-15b.

3.4.1.2.4 SHOCK

The SC contractor shall provide a shock environment for the SXI that is no worse than that shown in Figure 3-16.

3.4.1.2.5 TRANSPORTATION

The SC contractor shall provide a transportation environment for the SXI, both during the SXI integration with the SC and transportation of the SC to the launch facility, that is no worse than the static load and shock environments described in 3.4.1.2.1 and 3.4.1.2.4, respectively.

3.4.1.2.6 STIFFNESS

The SXI natural frequency is greater than 60 Hz when supported at the attachment points.

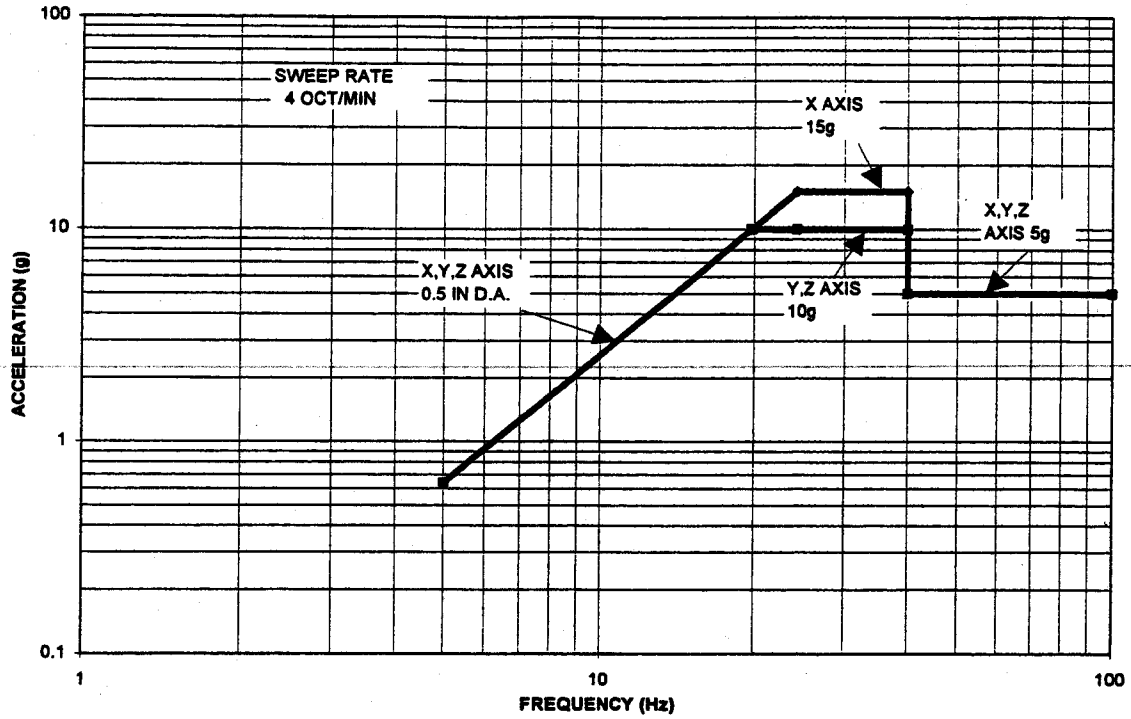


Figure 3-14a: SXI Telescope Acceptance Sine Vibration Environment

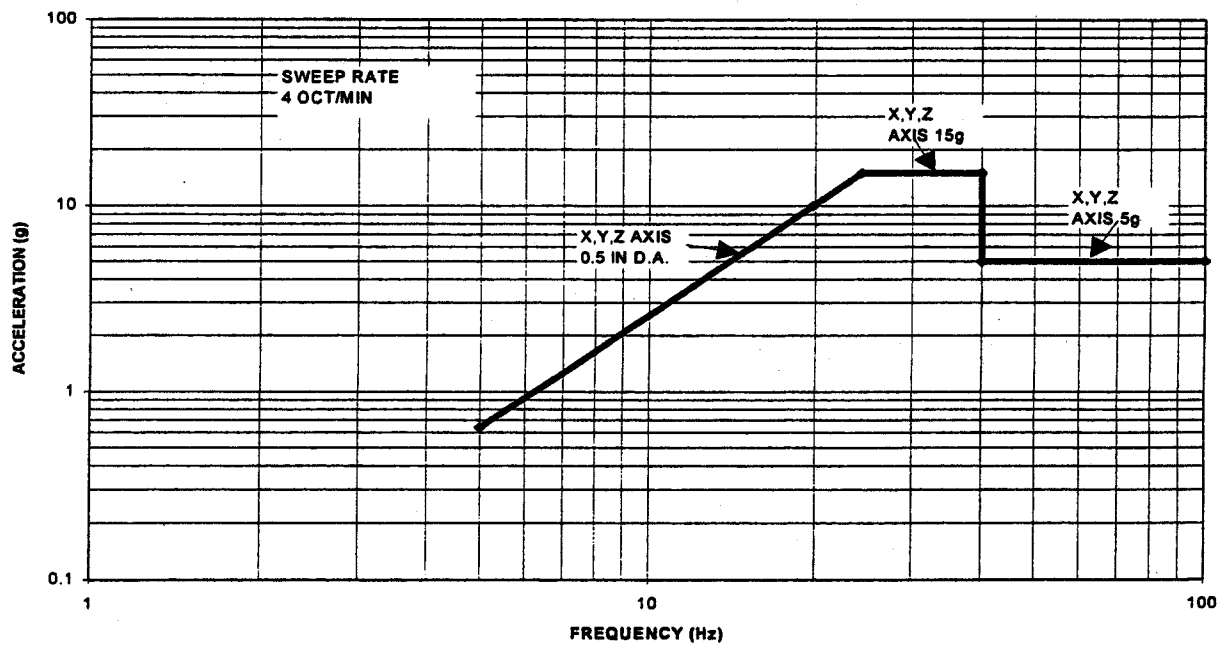


Figure 3-14b: SXI Electronics Box Acceptance Sine Vibration Environment

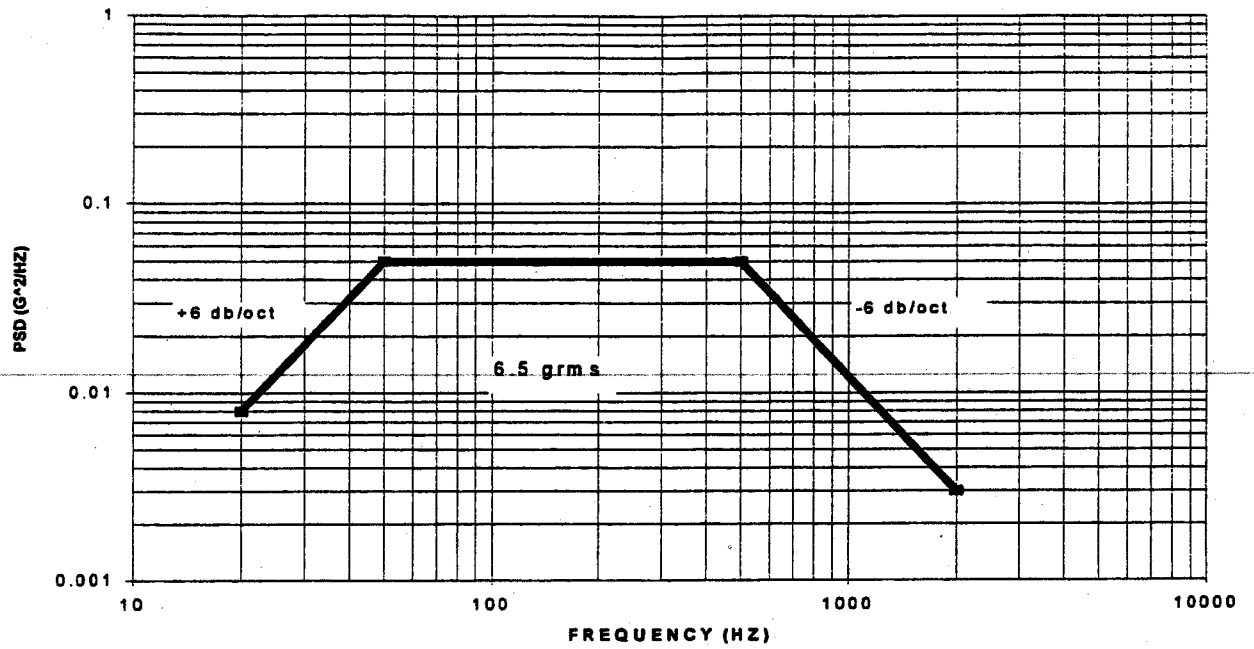


Figure 3-15a: SXI Telescope Protoflight Random Vibration Environment

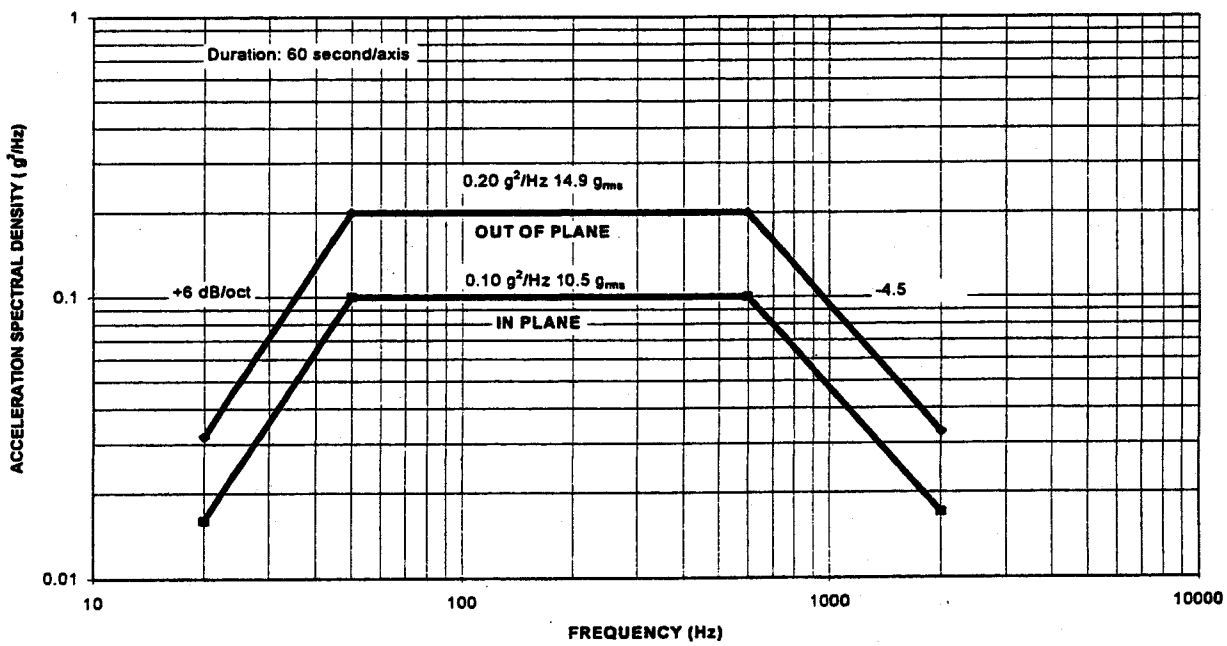


Figure 3-15b: SXI Electronics Box Acceptance Random Vibration Environment

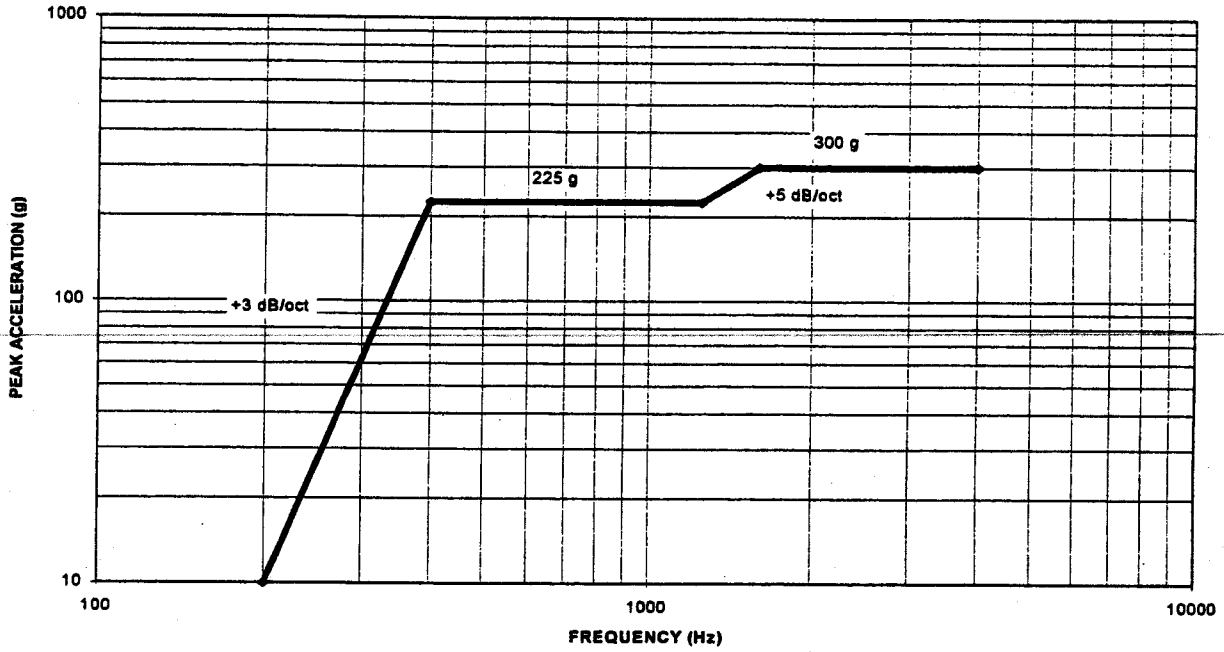


Figure 3-16: SXI Telescope and Electronics Box Shock Environment

### 3.4.2 MATERIAL, PARTS, AND PROCESSES REQUIREMENTS

The SC contractor shall avoid the selection and use of dissimilar metals at the interface between the SC and SXI. Where it is impractical to avoid dissimilar metals in direct contact with each other or their exposure to the same electrolyte, suitable protection shall be provided by coating, plating, or otherwise adequately protecting one or both surfaces.

### 3.4.3 THERMAL INTERFACES

The following thermal interface description shall be used to develop a spacecraft thermal design. The SXI telescope shall be mounted in a location that provides a sufficiently cold radiative sink for the SXI to meet its thermal requirements. The minimum transfer orbit and eclipse heater power allocations listed in Section 3.4.5.1.4 shall be provided to the SXI to maintain the temperatures within allowable limits. The SC mounting requirement for the SXI electronics boxes shall be developed assuming that the boxes are thermally well coupled to the SC interface.

The SC contractor shall document the details of the SXI/SC thermal interface design in the SXI ICD after award of the GOES-N,O,P,Q spacecraft contract.

#### 3.4.3.1 SXI TELESCOPE CONDUCTION INTERFACE

The SC contractor shall provide a minimum telescope mount interface (spacecraft side) temperature of -50°C for all mission phases while receiving no heat from the telescope into the spacecraft interface. The SC contractor shall provide a maximum telescope mount interface (spacecraft side) temperature of 0°C for all mission phases while receiving a maximum of 3 watts from the telescope to the spacecraft interface.

The SXI instrument contractor shall be responsible for determining the conductive isolation requirements and providing the conductive mount to meet these heat transfer requirements.

#### 3.4.3.2 SXI TELESCOPE RADIATION ENVIRONMENT

The solar viewing face (aperture side) of the SXI telescope envelope shall have an unrestricted, unblocked view of the Sun. At any time during a normal synchronous-orbit of the SC, the sides, the Sun-viewing face, and the anti-Sun viewing face of the SXI telescope shall not be exposed to incident radiation fluxes exceeding the values specified in the following table. The "solar" energy includes direct plus any solar energy reflected from the spacecraft. The "IR" energy is thermal energy radiated from spacecraft surfaces.

| | IR Energy | | Solar Energy | |
|---|---|---|---|---|
| | Cold/Minimum watts/m$^2$ | Hot/Maximum watts/m$^2$ | Cold/Minimum watts/m$^2$ | Hot/Maximum watts/m$^2$ |
| Sides | *55* | *125* | *10* | *50* |
| Sun face | *0* | *50* | *1270* | *1440* |
| Anti-Sun face | *0* | *75* | *0* | *65* |

Table 3-1 SXI Telescope Radiation Environment

#### 3.4.3.3 SXI ELECTRONICS BOXES

The SXI contractor shall specify the details of the interfaces (thermal and mechanical) of the electronics boxes with the SC. To supplement the electronics box cooling, the SXI contractor may add radiator area to each box design as required, pending mutual agreement with the SC contractor. The SC contractor shall provide the SXI Electronics Box mounting interfaces with temperatures in the range of 0°C to 40°C for all mission phases when the SXI is operating with the heat dissipations specified in Table 3-2. The heat dissipations specified in Table 3-2 are steady state heat flux values to the SC, and should be considered uniformly distributed over the mounting footprint defined by the static envelope. For the case of a non-operating SXI, the SC contractor shall provide a mounting interface temperature in the range of -10°C to +50°C.

| Component | Maximum Operating, Watts | Minimum Operating, Watts | Non-operating, Watts |
|---|---|---|---|
| Power Electronics | 10 | 2 | 0 |
| Data Electronics | 20 | 5 | 0 |
| HASS Electronics | 6 | 1 | 0 |

Table 3-2 Steady State Heat Flow to Spacecraft from SXI Electronics Boxes

### 3.4.4 CONTAMINATION CONTROL REQUIREMENTS

SC vents and venting on the SXI surfaces shall be minimized or eliminated in order to reduce contamination due to outgassing SC materials. The SC contractor shall design and use a drape/bag necessary for protecting the SXI telescope, when not being tested or in use at the SC contractor's facility during the SXI integration with the SC.

#### 3.4.4.1 DURING GROUND PROCESSING AND SC TRANSPORT

All flight hardware, shipping containers, and interface GSE shall be compatible with Class 100,000 conditions per Fed-Std 209. The instrument external surfaces shall meet visibly clean criteria or Level 500 per MIL STD-1246. The external surfaces are considered visibly clean if they contain no visible particles (viewed with the unaided eye) from a distance of 6-18 inches using >100 ft-candles high intensity light. The molecular non-volatile residue (NVR) level for solar illuminated external surfaces shall not violate the requirement on the increase in absorptance $\Delta\alpha$ at EOL stated in Section 3.4.4.2. All other SXI external surfaces shall be consistent with the SC level requirement of < 2.0 mg/ft$^2$ for NVR at EOL.

The SC contractor shall supply any purge gas required by the SXI, per SXI contractor's specification, during SC ground processing and inter-building transport at the SC contractor's facility. The purge gas cleanliness shall be documented in the SXI ICD, and shall be verified by test.

#### 3.4.4.2 OUTGASSING REQUIREMENTS

The increase in solar absorptance $\Delta\alpha$ of the SXI solar illuminated surfaces due to contamination shall be less than 0.03 at end-of-life (EOL). An analysis using Moleflux or equivalent shall be performed to determine the direct and reflected outgassing effects from the spacecraft to the SXI thermal control surfaces. The analysis shall consider the SXI external coatings and the subsequent effect contamination deposition has with a particular coating. In the event the analysis shows that solar absorptance requirement is violated, provide an approach and rationale necessary to mitigate the increase in solar absorptance.

### 3.4.4.3 ON ORBIT (PLUME IMPINGEMENT)

Spacecraft vents shall be directed away from the SXI to minimize potential degradation to SXI thermal or optical performance. The mass flux from plume impingement shall not violate the $\Delta\alpha$ allowable requirement at EOL stated in Section 3.4.4.2.

### 3.4.5 ELECTRICAL INTERFACE CHARACTERISTICS

The SC shall provide the SC-SXI electrical interface through slip rings in the SADA. Ten (10) slip rings that carry signals essential for SXI operation shall be reserved as follows:

- three for command data
- three for input power
- two for SXI output data
- two for indicating the onset of 10 seconds of the stable pointing period.

The table below presents the slip ring configuration details for the GOES-M/SXI interface.

| Interface description (Slip ring number) | Signal description | Reference page number in Appendix A |
|---|---|---|
| 10 | Prop Cmd Vector 36 10-bit data | A4 |
| 12 | Prop Cmd Vector 36 Gated Clock | A4 |
| 75 | Prop Cmd Vector 36 Data Gate | A4 |
| 17 | SXI On/Off Control | A7 |
| 18 | Heater On/Off Control | A7 |
| 69 | SC Power Bus | A7 |
| 59 | SATTDE Step Status | A5 |
| 62 | SATTDE Step Status Return | A5 |
| 81 | SXI MDL Output Data | A2 |
| 82 | SXI MDL Output Data | A2 |
| 77* | Common Cmd Return | A4 |
| 72* | Primary Power Return | A7 |

* shared with XRPE

See Figure 3-17 for the general electrical interface and Appendix A for detailed signal interfaces. In the above table, only the first ten slip rings are considered to be dedicated to the SXI. Slip rings numbered 37, 38, 49, 77, and 72, shown in Figure 3-17, are not considered to be dedicated to the SXI. The SC contractor shall allow a 10% margin in the number of slip rings dedicated to the SXI.

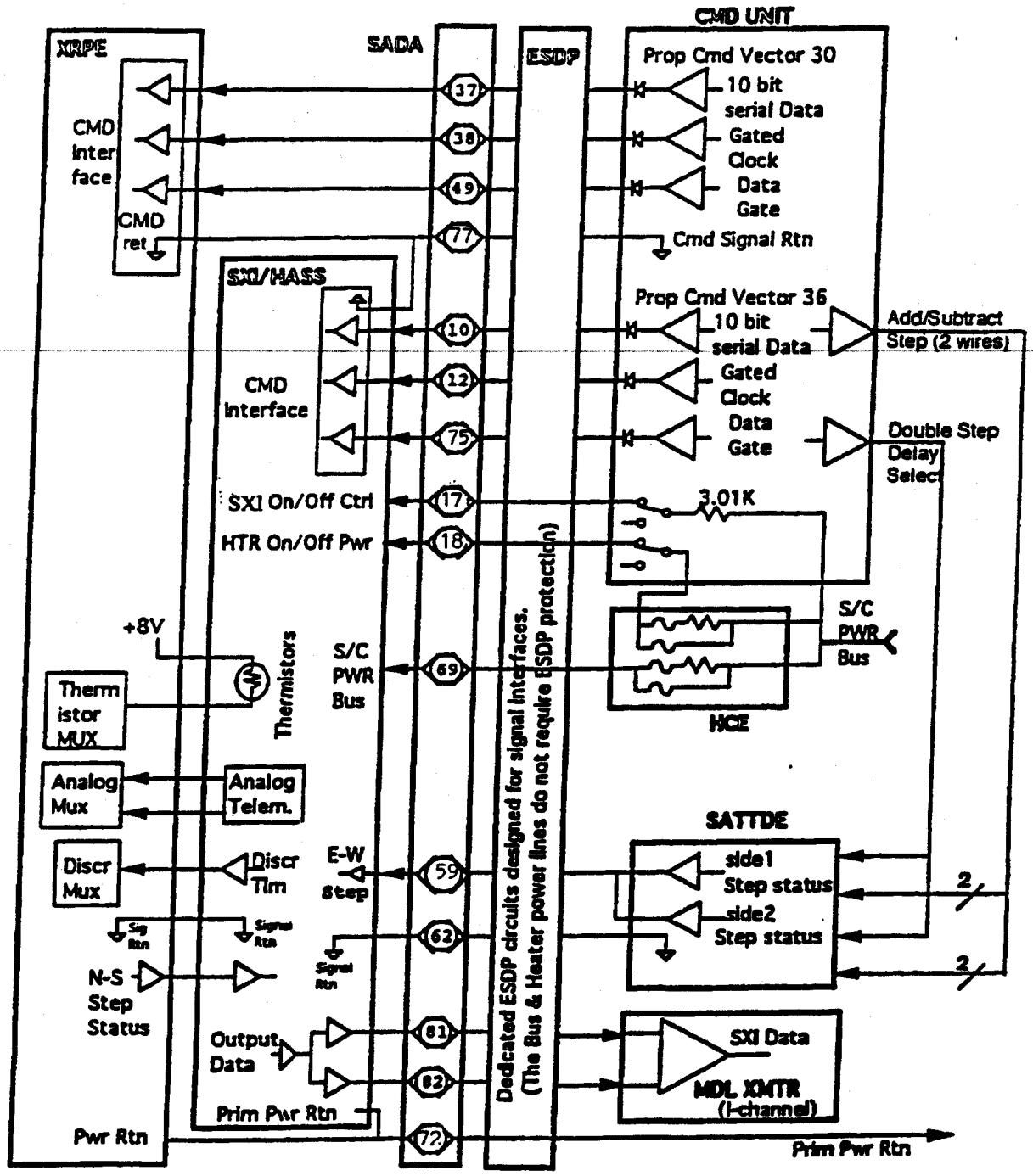


Figure 3-17: SXI/SC Electrical Interface

3.4.5.1 PRIMARY INPUT POWER

The SC shall provide power to the SXI from the primary bus. This power shall be regulated at 42.0 ± 0.5 VDC during Sun light operation. During eclipse this primary power bus is controlled by battery voltage, which shall be maintained between 29.0 and 42.5 VDC.

3.4.5.1.1 INSTANTANEOUS BUS VOLTAGE

Under all transient conditions, the instantaneous SC bus voltage shall remain within the limits of 28.5 to 44.5 VDC.

3.4.5.1.2 HEATER VOLTAGE.

The SC shall supply a commandable bus voltage to the SXI heaters as shown in Figure 3-17. The SC contractor shall determine the exact voltage in collaboration with the SXI instrument contractor. The SC contractor shall document the SXI Heater Voltage in the SXI ICD.

3.4.5.1.3 FUSING

The SC shall provide redundant fuse protection for the SXI. The primary bus power and the heater power inputs provided to the SXI shall be protected with redundant fuses. The primary bus and heater fuses shall be selected in collaboration with the SXI contractor.

3.4.5.1.4 INPUT POWER CONSUMPTION

The SC shall provide a minimum of 80 Watts power at the EOL to the SXI. The SC shall accommodate 25% margin in the SXI's total power consumption. Note: the SXI is required to operate through eclipse.

| | |
|---|---|
| Operational, non-eclipse: | 60 Watts minimum at EOL, from main bus and heater bus combined |
| Operational, eclipse: | 20 Watts additional power at EOL required for accommodating the SXI heaters. |
| Transfer orbit: | 40 Watts minimum, from main bus and the heater bus combined. |

3.4.5.1.5 IN-RUSH CURRENT

The SC-SXI electrical interface shall allow the SXI to draw a minimum in-rush current, upon SXI turn-on, of 150% of the SXI nominal operating current.

3.4.5.2 HEATER ON/OFF POWER

The SC shall provide a heater On/Off power line to the SXI for its heaters. The SC shall be able to switch this line on or off, via the SC command unit, to enable/disable the heaters. The SC shall provide the fusing for the heater circuit.

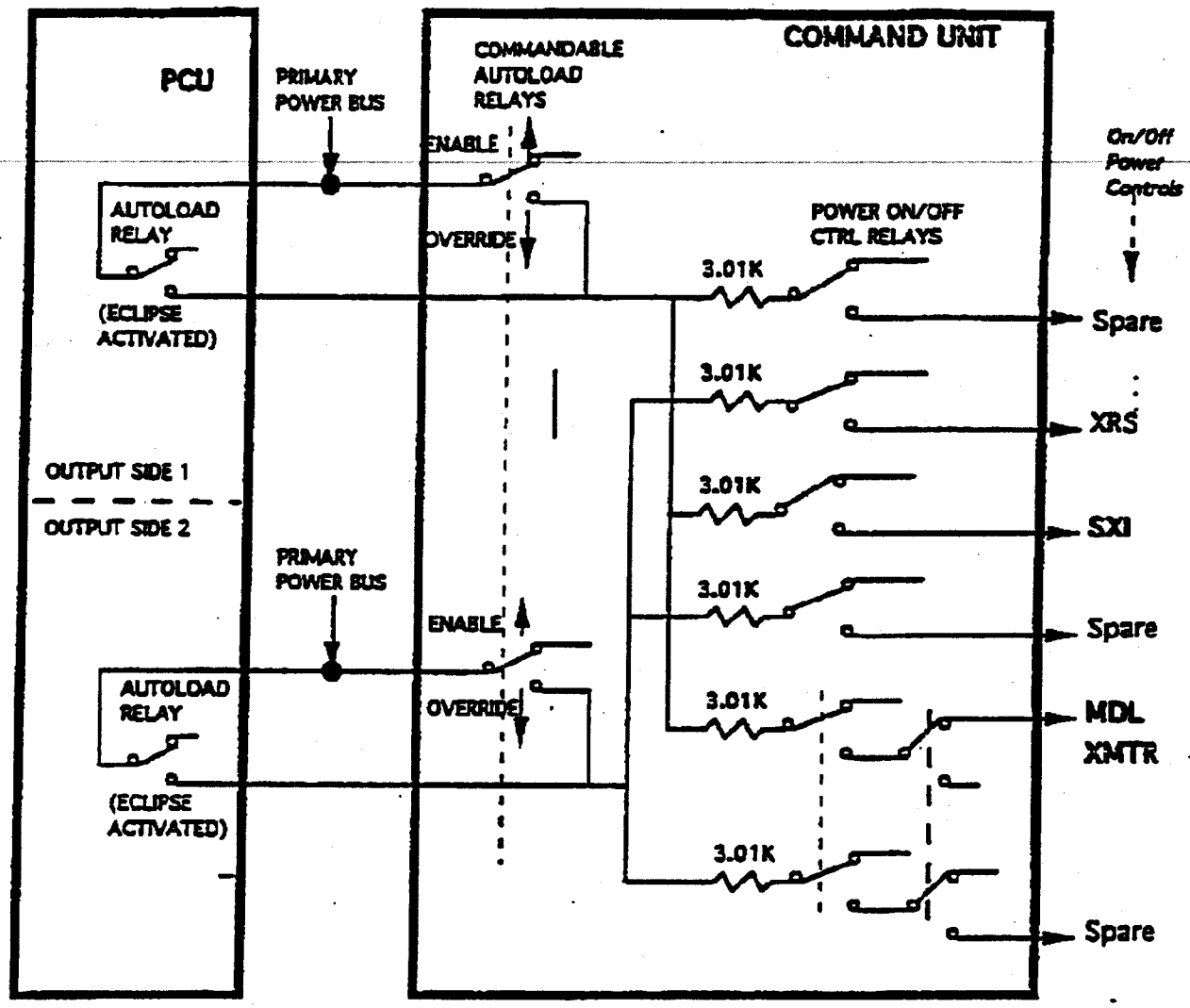


*(NOTE: ALL THE RELAYS ARE LATCHING TYPE)*

Figure 3-18: GOES-M Auto Load Group Control

### 3.4.5.3 DC/DC CONVERTER ON/OFF CONTROL

The SC shall provide a control signal to turn the SXI ON/OFF. This control signal shall be provided through relay contacts located in the SC command unit. The characteristics of this signal as measured at the SXI input terminals shall be as defined below:

a. "On" Signal Voltage: Primary Power Bus voltage in the range of 29.0 to 43.0 VDC, as seen through the source resistance specified in item b below.
b. "On" Source Resistance: 3K ohms ±10%.
c. "On" Current: 150 microamps minimum, 1 milliamp maximum.
d. "Off" Signal: Short to ground.
e. Contact Bounce Time: 6 milliseconds maximum.
f. Conducted Emission:
   "Open": 500 milli-Volts peak-to-peak maximum,
   "Closed": 20 mA peak-to-peak maximum,
   both over a frequency range of 30 Hz to 150 kHz, decreasing at 6 dB/octave above 150 kHz.

#### 3.4.5.3.1 AUTOMATIC ECLIPSE LOAD CONTROL

The SXI main power bus load shall be automatically controlled at the entry and exit of eclipse by the DC/DC Converter Control signal defined in 3.4.5.3. The "Auto load group" circuitry shall provide the automatic on/off control of the SXI. Referring to Figure 3-18, when the automatic load controller in the Power Control Unit (PCU) in the SC detects a drop in SA current below a specified threshold, it shall open the auto load relay, removing the SXI from the power bus. Upon emergence from the eclipse, the PCU controller shall switch the SXI back on 140 seconds after the solar array shunt current exceeds a defined threshold. This action shall be transparent to the SXI. The automatic eclipse load control shall have command override capability (See Figure 3-18).

### 3.4.5.4 TELEMETRY INTERFACE

The SC telemetry logic shall interface with SXI telemetry. The SC shall provide the following telemetry channels to the SXI:

a. three (3) analog channels per 3.4.5.4.1. See Table B1.
b. seven (7) bi-level channels per 3.4.5.4.2. See Table B2.
c. four (4) temperature sensor channels per 3.4.5.4.3. See Table B3.

These telemetry signals are listed in Appendix B. The SC contractor shall allow a 10% margin for the telemetry channels.

#### 3.4.5.4.1 ANALOG SIGNALS

The SC shall sample analog telemetry signals from the SXI at least every 16 seconds, and then shall 8-bit quantize the analog telemetry signals for the range of the parameter measured. Each of these signals shall be provided with a dedicated analog telemetry return as output at individually designated connector pins in the SXI and have the following characteristics.

a. Signal Voltage range: The output signal level shall be within the range of 0.0 to +5.12 VDC, reference to the signal return. (For calibration purposes, a 10 Megohms ±5% load shall be used).
b. Output Impedance: The output impedance of the SXI telemetry signal (source impedance) shall not exceed 1,000 ohms of resistance.
c. Load Resistance: The load resistance of the SXI telemetry signal shall be the telemetry unit's input resistance, which shall be 10 Megohms minimum.
d. Common Mode Voltage: The instantaneous common mode voltage between the signal return line and the chassis shall not exceed 500 milli Volts peak-to-peak over the frequency range of DC to 10 Mhz.
e. Conducted Susceptibility: N/A
f. Conducted Emission: Less than 20 millivolts peak-to-peak as observed on an oscilloscope.

#### 3.4.5.4.2 BI-LEVEL TYPE A SIGNALS

Bi-level type A signals from the SXI to the telemetry unit shall be Transistor-Transistor Logic (TTL) compatible output voltages. The SC shall sample these type A signals at least every 8 seconds. The characteristics of these signals are:

a. "One" Voltage Level: +2.4 to +5.25 VDC (measured with a load resistance of 15K ohms returned to +5.0 VDC.)
b. "One" Current Level: The source (SXI) supplies up to 100 microamperes.
c. "Zero" Voltage Level: 0 to +0.5 VDC (measured with a load resistance of 15K ohms returned to +5.0 VDC).
d. "Zero" Sink Current: The source (SXI) can sink up to 0.5 milliamperes.
e. Overvoltage: In the event of SXI malfunction or failure, the signal from the SXI to the telemetry unit have limiting circuitry so as not to exceed the range of -0.5 to +5.5 VDC.
f. Conducted Susceptibility: N/A
g. Conducted Emission: Both "one" and "zero" levels: Not to exceed 100 millivolts peak-to-peak overshoot or undershoot, measured 50 milliseconds after change of state.

3.4.5.4.3 TEMPERATURE SENSOR SIGNALS

The SC shall provide +8 V switched power and conditioning circuitry for the temperature sensors for use by the SXI. The signal shall be sampled at least every 8 seconds by the telemetry unit.

3.4.5.4.4 TELEMETRY DATA TIMING

All timing signals shall be generated by the SC telemetry system such that the SXI needs to make available to the SXI/SC interface only the status of the telemetry signals. The SXI shall update its telemetry asynchronously to the sampling by the SC telemetry system.

3.4.5.5 COMMAND INTERFACE

The SC command logic shall interface with the SXI command logic as specified in the following paragraphs. The major attributes of the SC command unit as they relate to the operational commanding capability of the SXI are summarized below. The actual physical command interfaces between the SC and the SXI shall be as defined in the following paragraphs. These command signals are listed in Appendix B.

3.4.5.5.1 LATCHING RELAY COMMANDS

The SC command unit shall provide latching relay interface to the SXI to control the bus voltage loads specified in 3.4.5.1. The relays (20.0 V min, 29.0 V max) shall have the following characteristics.

a. Contact Transfer Characteristics: Make before break or break before make.
b. Contact Configuration: Single Pole Double Throw (SPDT).
c. Operation: Switched to either position (ON or OFF) by a discrete command from the command unit.
d. Load or Contact Current Capability: 150 microamps to 1.0 amp dc.
e. Contact Dry Circuit Voltage: 3mV at 150 microamps.
f. Operate Time Including Bounce: 7 milliseconds maximum.
g. Conducted Emission:
   Relay "Open": 500 mV peak-to-peak maximum
   Relay "Closed": 100 mA peak-to-peak maximum
   over a frequency range of 1 Hz to 150 kHz, decreasing at 6 dB/octave above 150 kHz.
h. Conducted Susceptibility:
   Relay "Open": N/A
   Relay "Short": 100 mA peak-to-peak maximum
   over a frequency range of 1 Hz to 150 kHz, decreasing at 6 dB/octave above 150 kHz.

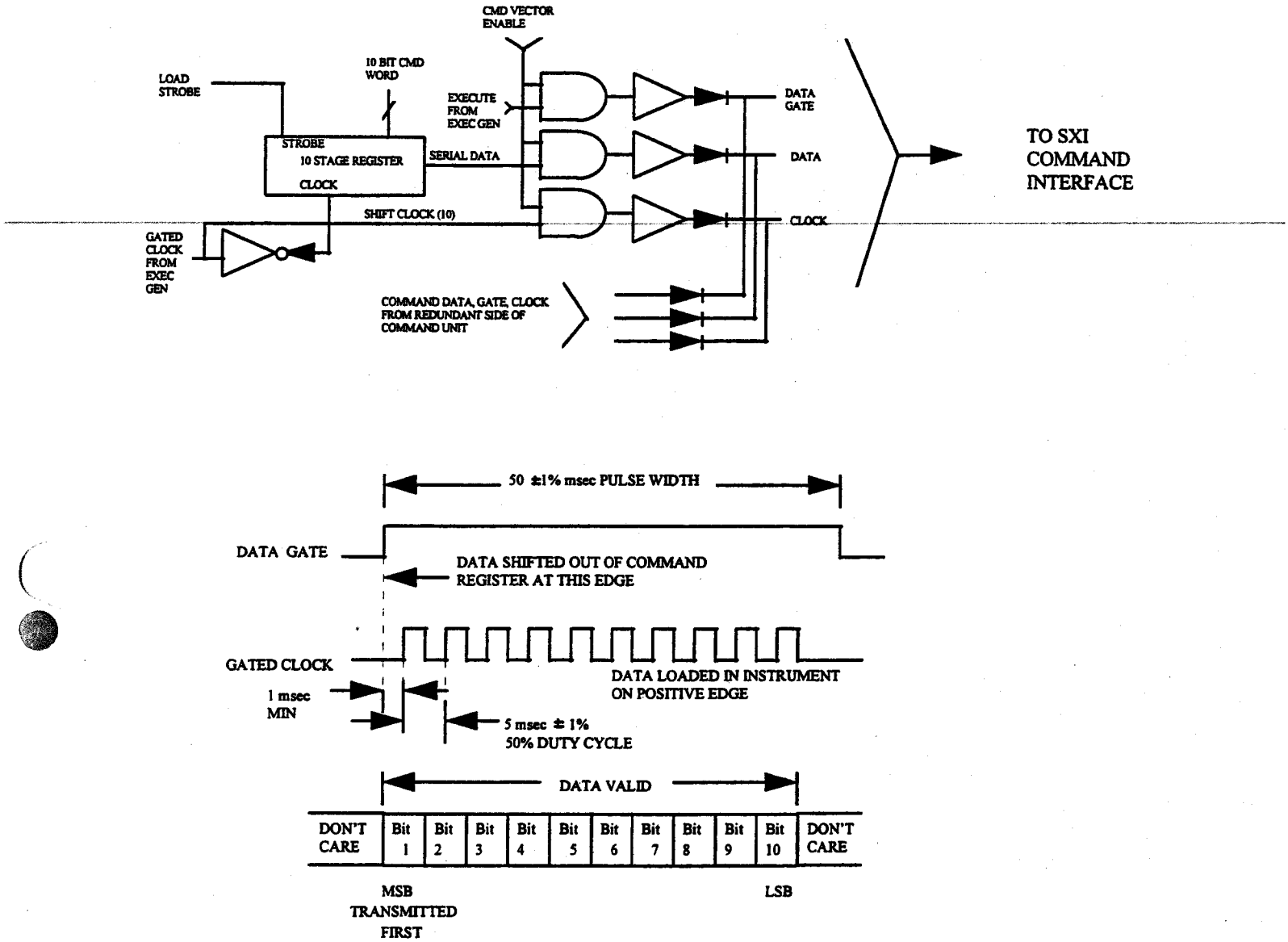


Figure 3-19: Timing and Format of SXI Proportional CMD Data

3.4.5.5.2 PROPORTIONAL COMMANDS

The Command unit (the source) shall provide to the SXI a three line interface consisting of a Data Gate, a 10-bit Serial Data message, and a Shift Clock. These signals shall have the following characteristics as measured at the SXI input terminals. This interface shall be as shown in Figure 3-19.

a. "One" Voltage: (Gate, Data, Clock) 20 V min, 29.0 V max, referenced to the signal return.
b. "One" Source Impedance: 550 ohms maximum.
c. "Zero" Voltage: 0.0 ± 0.2 VDC referenced to the signal return.
d. "Zero" Current sink capability: Minimal current, diode isolated.
e. SXI Input Impedance: 5K ohms minimum, 10K ohms maximum.
f. Data Format and Timing: As shown in Figure 3-19.
g. "One Pulse Rise Time: 10 microseconds minimum, 50 microseconds maximum. (Measured between 10 and 90% amplitude points.)
h. "One" Pulse Fall Time: 180 microseconds maximum. (Measured between 10 and 90% amplitude points).
i. Conducted Emission:
   "One" level: Less than 200 millivolts peak-to-peak
   "Zero" level: Less than 200 millivolts peak-to-peak
   over a frequency range of 30 Hz to 150 kHz, decreasing at 6 dB/octave above 150 kHz.
j. Conducted Susceptibility: N/A

3.4.5.6 SXI OUTPUT DATA.

The SC shall provide a Multi-use Data Link (MDL) transmitter for the downlink transmission of all SXI science and housekeeping data.

3.4.5.6.1 MDL TRANSMITTER INTERFACE

The SC interface shall accommodate the SXI output data transmitted to the MDL transmitter, with the characteristics of the SXI output data measured at the SXI output given as follows:

a. Data Bit Rate: 100 kb/s
b. Signal Waveform: Bipolar
c. Data Format: Serial, Bi-Phase Level
d. One of the bi-phase level shall be a transition of: +3.5 V min, +4.0 V max
e. Data "One" Source Current: 4.5 milliamperes, minimum
f. The other bi-phase signal shall be a transition of: -4.0 V min, -3.5 V max
g. Data "Zero Source Current: 4.5 milliamperes, minimum
h. Output Driver: Differential line driver
i. Load Resistance: Balanced, 450 ohms ±5%
j. Load Capacitance: 2000 picofarads, max
k. Waveform Rise Time: 10% of signal waveform, maximum
l. Waveform Fall Time: 10% of signal waveform, maximum
m. Conducted Susceptibility: N/A
n. Conducted Emission: Both "one" and "zero" levels: 100 millivolts peak-to-peak maximum overshoot or undershoot, measured at center of bit.

### 3.4.5.7 OTHER ELECTRICAL SIGNALS

#### 3.4.5.7.1 IMAGE SYNCHRONIZATION

The SC shall provide this signal to the SXI indicating the onset of the stable pointing period defined in Performance Specification for Geostationary Operational Environmental Satellite, Document No. S-415-22.

#### 3.4.5.8 BONDING, GROUNDING, AND ISOLATION

The SC shall provide the SXI with bonding surfaces designed in accordance with MIL-B-5087 and grounding in accordance with MIL-STD-1541, and shall comply with the requirements of the SXI ICD. All external electrically conductive surfaces of the SXI, including thermal insulation and thermal control surfaces, shall be grounded to the SC structure.

The GOES-M SC/SXI grounding interconnection is shown in Figure 3-20.

### 3.4.6 ELECTROMAGNETIC COMPATIBILITY

The electromagnetic compatibility requirements on the SXI are the same as those on the SC stated in Section 8.4 of Performance Specification for Geostationary Operational Environmental Satellite, Document No. S-415-22.

The general requirements for electromagnetic compatibility are as follows:

1. The SC shall not generate electromagnetic interference that could adversely affect the performance or the safety and operation of the SXI subsystem.
2. The SC and its components shall not be susceptible to any SXI emissions that could adversely affect the SC's safety and performance. This applies whether such emissions are intentional or unintentional.
3. The SC contractor shall develop an EMC test program that is meant to uncover workmanship defects and unit-to-unit variations in electromagnetic characteristics, as well as design flaws. The qualification and flight acceptance EMC programs are the same. Performance of both will provide a margin of hardware reliability. The SC together with an integrated SXI shall be tested for EMC and Electromagnetic Interference (EMI).

Most of the EMC test requirements are based on the requirements of MIL-STD-461C and 462, as amended by Notice 1, and MIL-STD-463A. All references in this document to MIL-STD-462 assume reference to Notice 1.

The EMC test requirements herein when performed as a set are intended to provide an adequate measure of hardware quality and workmanship. The tests are performed to fixed levels which are intended to envelope those that may be expected during a typical mission and allow for some degradation of the hardware during the mission.

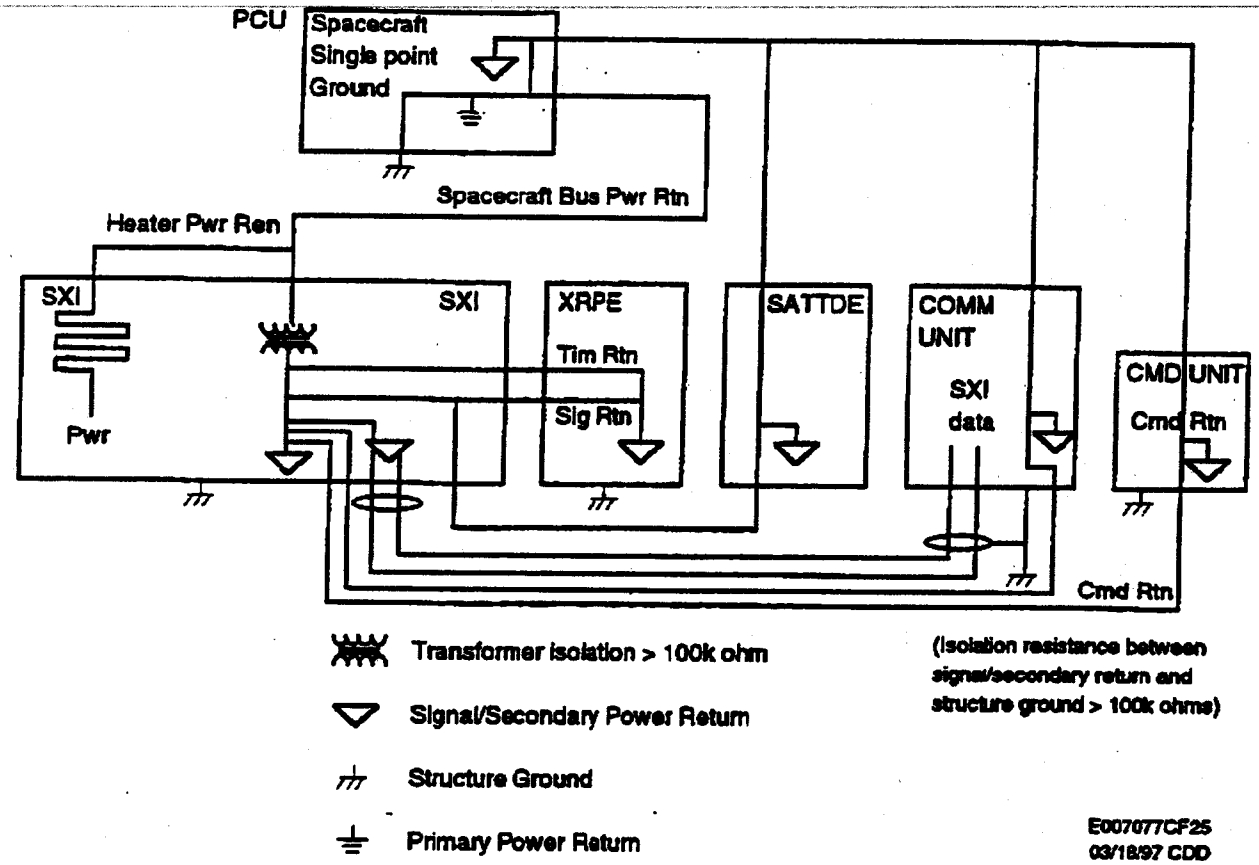


Figure 3-20: GOES-M SC/SXI Grounding Interconnection

## 3.5 INTEGRATION AND TEST REQUIREMENTS.

### 3.5.1 SXI MASS MODEL

The SC contractor shall perform preliminary fit check, limited SC functional tests, deployment check, and MLI design/fit-check using the mass model (MM) provided by the SXI instrument contractor. The MM will be representative of the flight model in the areas of mass properties, dimensions, connectors, mechanical interface, and MLI.

### 3.5.2 PURGE GASES

The SC contractor shall supply the purge gas, if needed by the SXI, during the integration of the SXI with the SC, during SC transport, and at the launch site. The purge requirements shall be specified by the SXI contractor.

### 3.5.3 TEST EQUIPMENT ELECTRICAL INTERFACE

The interface from ISAGE to the SXI EGSE MDL input shall have the following characteristics: Bit Coded NRZ-L, with RS-422 balanced levels for data and clock, using DE-9 connectors. See Figure 3-21. The data will be in the same format as the data transmitted from the SXI, except that the data will be coded NRZ-L. The following are the configurations in which the EGSE and the simulators will be used at various locations. The SC contractor shall enable the integration of the SXI with the SC through the operational modes described in Sections 3.5.3.1-3.5.3.4. The SC contractor shall provide the SC simulator to the SXI instrument contractor for the configurations described in Sections 3.5.3.1 and 3.5.3.2.

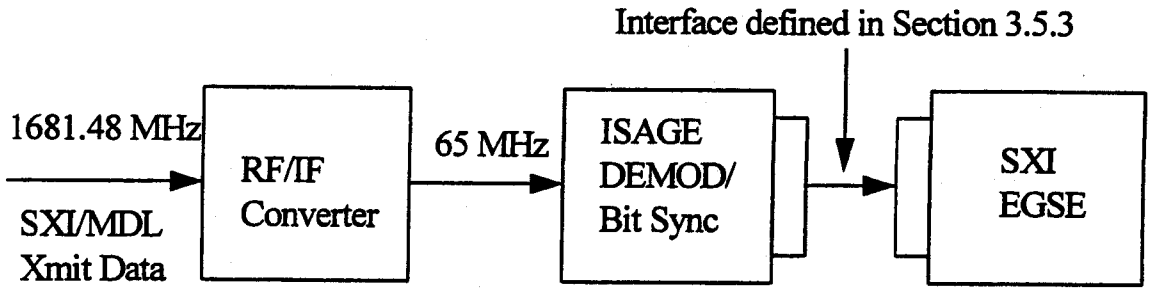


Figure 3-21: Test Equipment Electrical Interface

### 3.5.3.1 ELECTRICAL GROUND SYSTEM TEST

In this configuration, shown in Figure 3-22, the SXI simulator is used to test the EGSE. The EGSE receives the data either directly from the SXI simulator or through a SC simulator, which can be a part of the EGSE, developed to convert the SXI into the form that would be received by the SC telemetry.

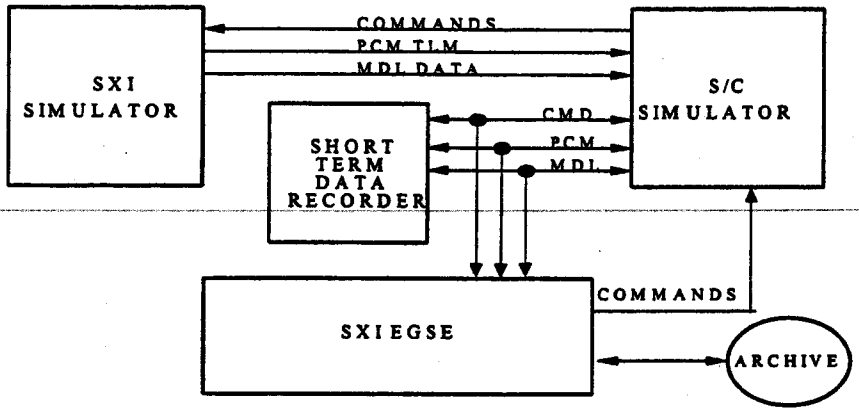


Figure 3-22: Schematic of the GSE Configuration for SXI/SC Interface Checkout

### 3.5.3.2 INSTRUMENT INTEGRATION AND TEST

In this configuration, shown in Figure 3-23, the SXI simulator is replaced with the actual SXI instrument.

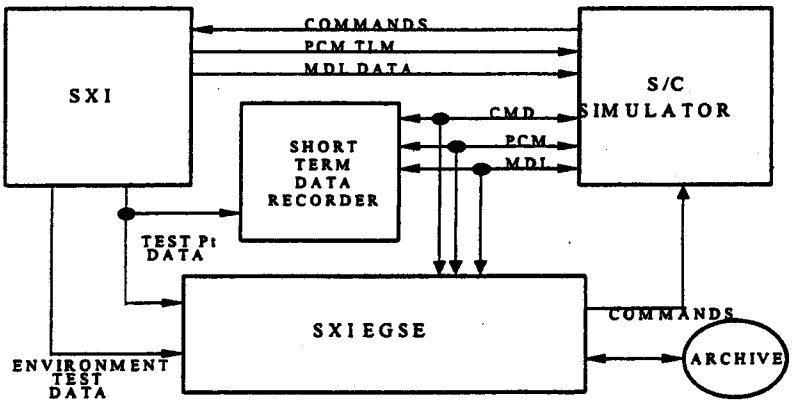


Figure 3-23: Schematic of the GSE Configuration for the SXI Instrument-level Test

### 3.5.3.3 SPACECRAFT INTEGRATION AND TEST

In this configuration, shown in Figure 3-24, the SXI instrument is integrated with the SC.

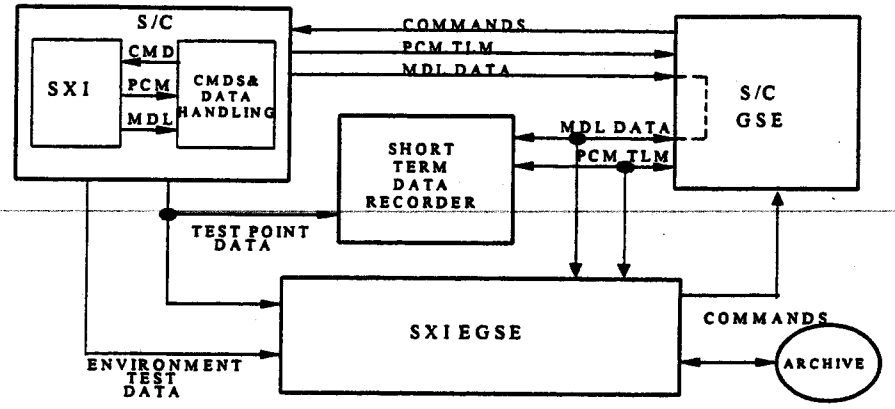


Figure 3-24: Schematic of the GSE Configuration for SXI Integration with S/C

### 3.5.3.4 OPERATIONAL CONFIGURATION

Figure 3-25 shows the interface between the SXI EGSE, the SC, SOCC, NOAA/SEC when the SXI operates on-orbit.

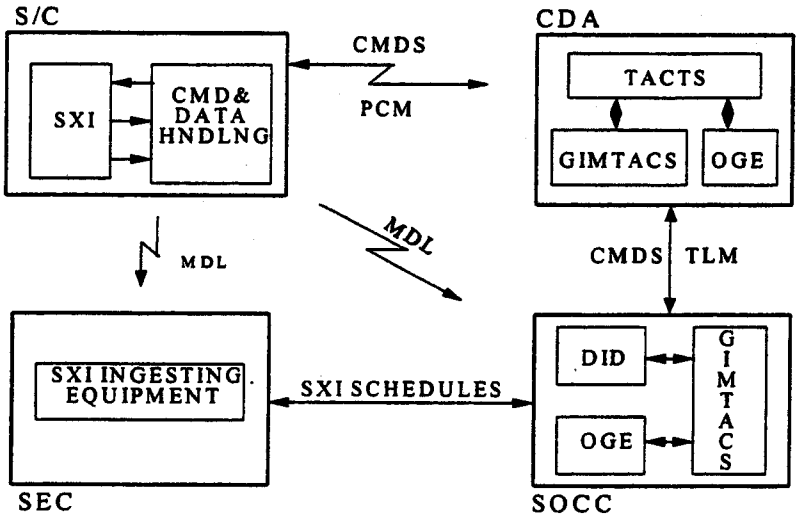


Figure 3-25: Schematic of On-Orbit SXI Operations

# 4. GLOSSARY

See Figures 3-1 and 4-1, respectively, for launch (stowed) configuration and on-orbit (deployed) configuration of the GOES-M SC. Figure 3-2 shows the South Panel of the SC. Figure 4-2 details how the SXI is stowed during launch in the south panel cavity of the GOES-M SC. Figure 4-3 shows the deployment sequence of the Solar Array assembly (which includes the SXI) on orbit.

SXI - Unless specifically stated otherwise (e.g., "SXI Telescope" or "Electronics Box"), "SXI" in this document refers to, and all requirements in this document applies to, all parts of the SXI system (including electronics boxes, harnesses, optical bench, mounting bracket, High Voltage Power Supply (HVPS), built-in High Accuracy Sun Sensor (HASS), Multi-layer Insulators (MLI) for the SXI Telescope and electronics boxes, etc.). See Figure 3-5 for the SXI system mounted on GOES-M SC Solar Array Yoke. Figure 3-3 shows the SXI Telescope, XRS, and SASs mounted on XRP.

SXI Telescope - SXI Telescope includes all parts of the SXI that are mounted on the GOES-M/IMP, including mounting bracket, optical bench, built-in HASS, HVPS, MLI, etc. The details of the SXI Telescope are shown in Figure 1-1.

Electronics Box - GOES-M/SXI Electronics Boxes include the SXI Power Electronics Box, the SXI Data Electronics Box, and the HASS Electronics Box. This may not necessarily be true for the new design. Figure 4-4 shows the GOES-M/SXI Electronics Boxes in detail.

Spacecraft Attitudes - In the on-orbit mode, the spacecraft's earth panel points towards the earth and the solar array points in a direction opposite the orbit normal. The SC roll, pitch, and yaw motions are defined as the rotations about the SC body-attached X, Y, and Z axes, respectively.

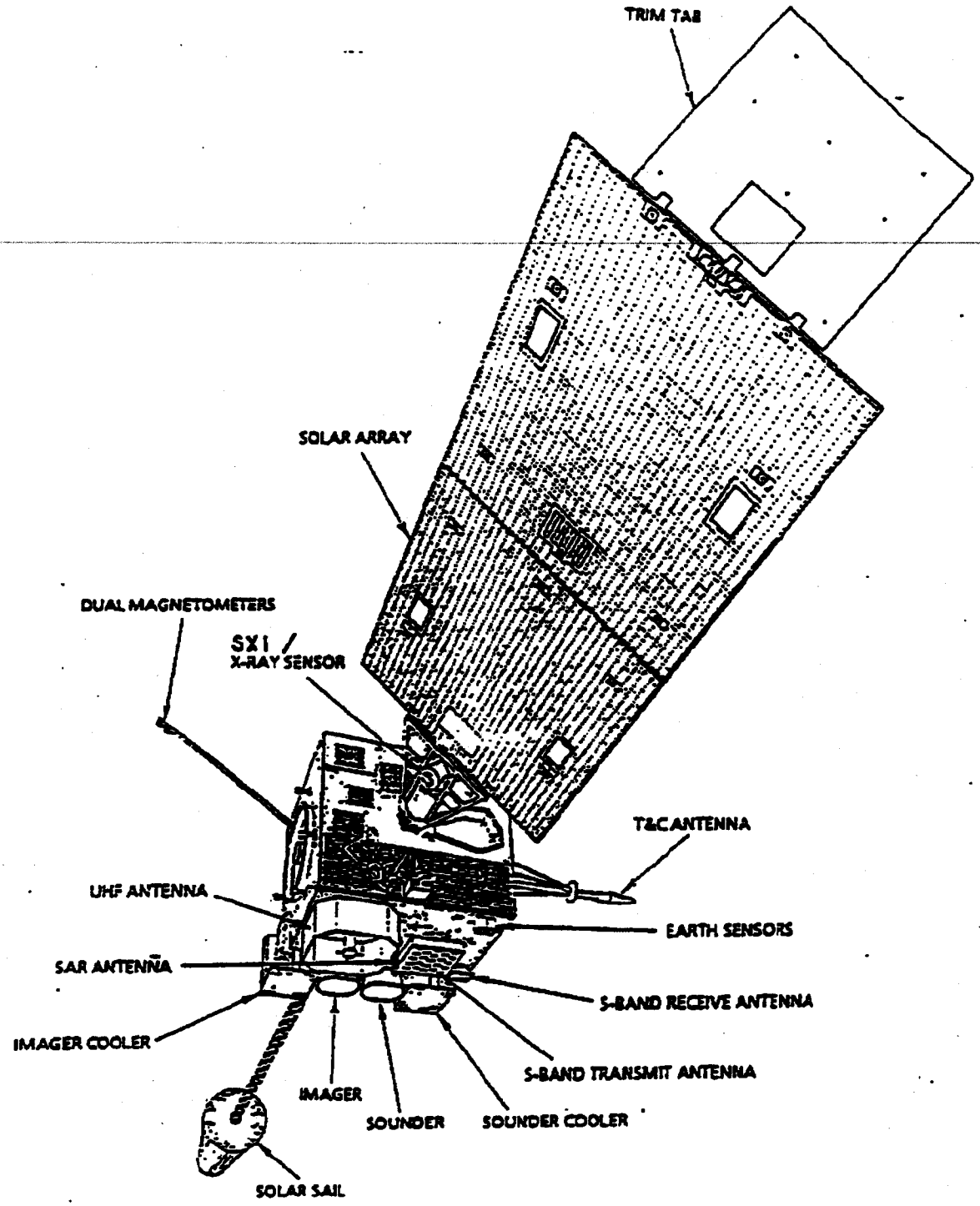


Figure 4-1: GOES-M Spacecraft, On Orbit (Deployed) Configuration

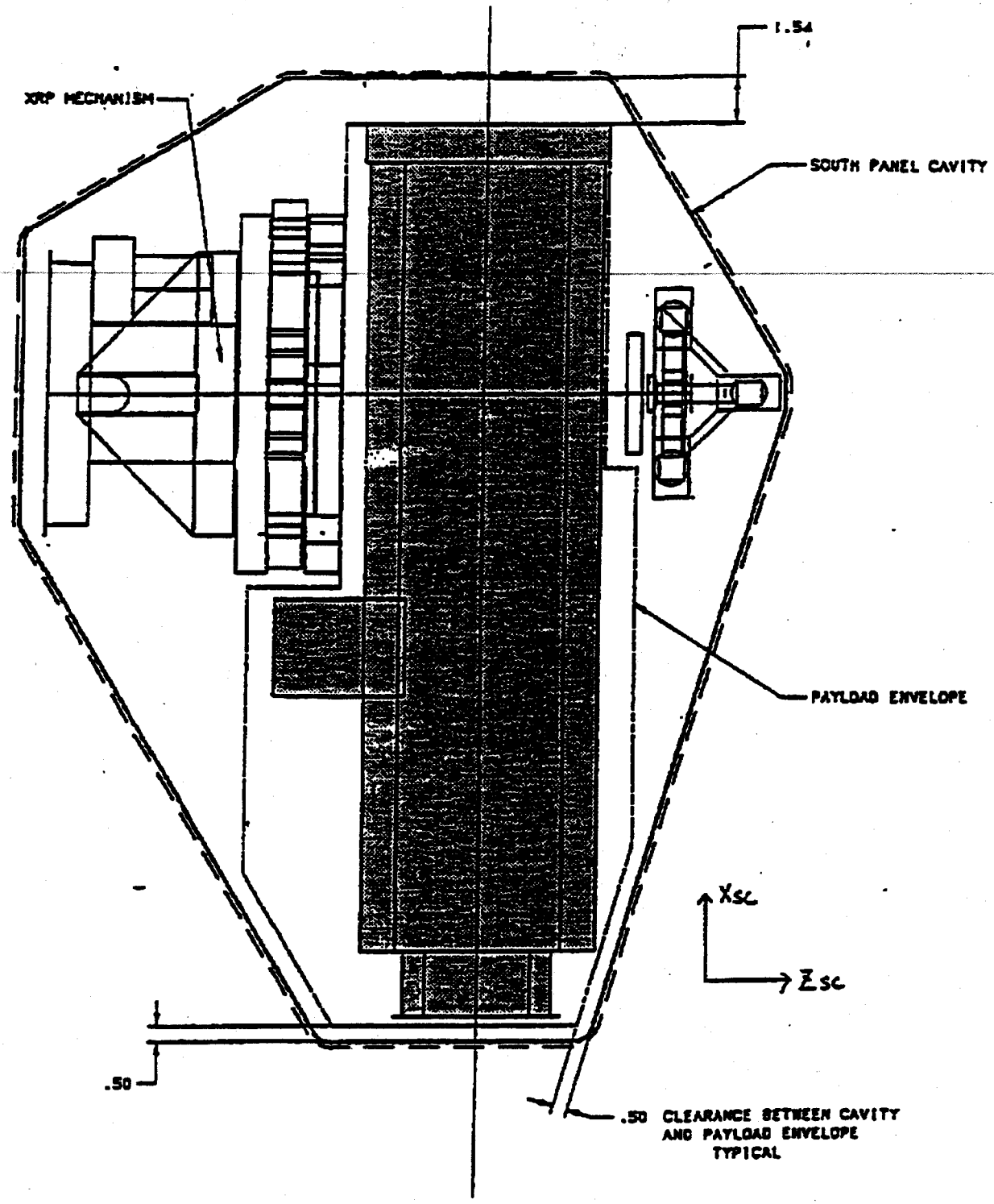


Figure 4-2: SXI Telescope Stowed in Spacecraft South Panel Cutout on GOES-M

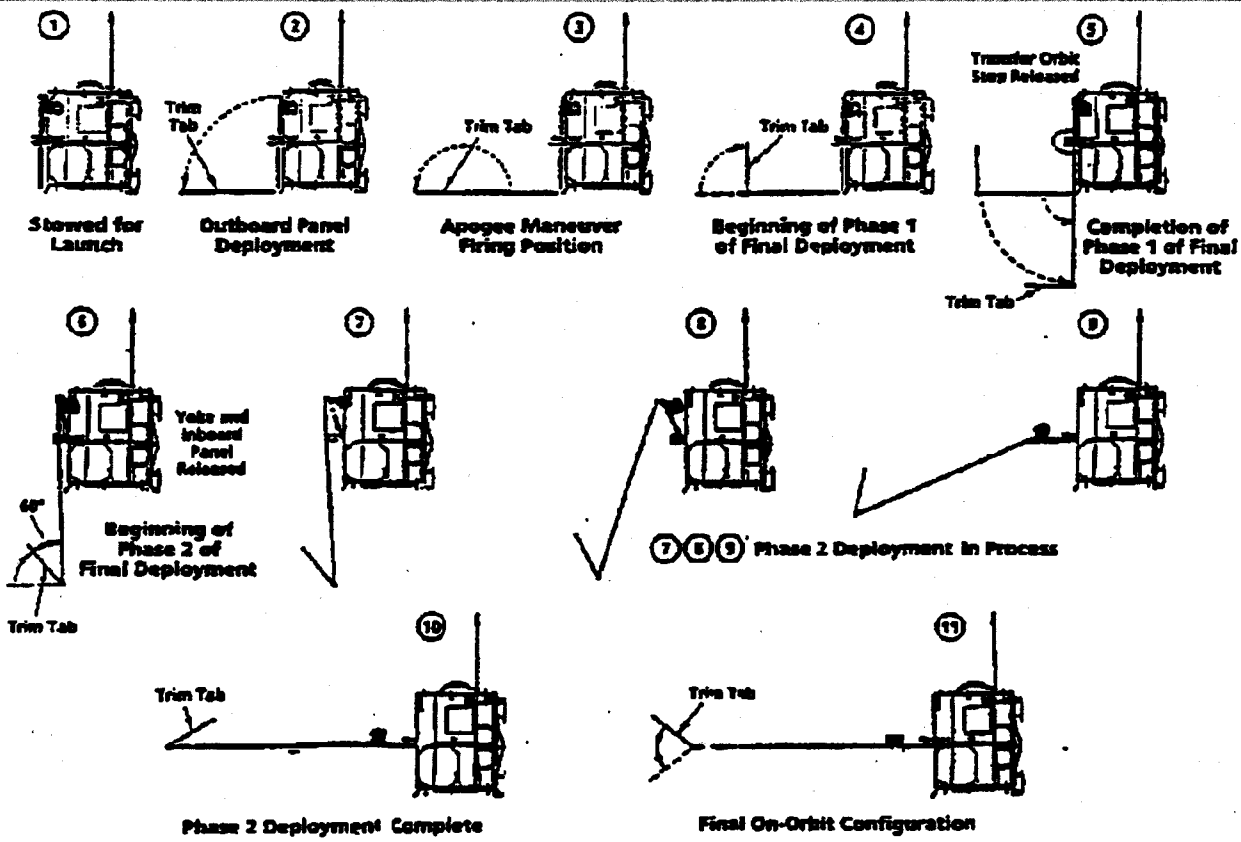


Figure 4-3: GOES-M Solar Array Assembly Deployment Sequence

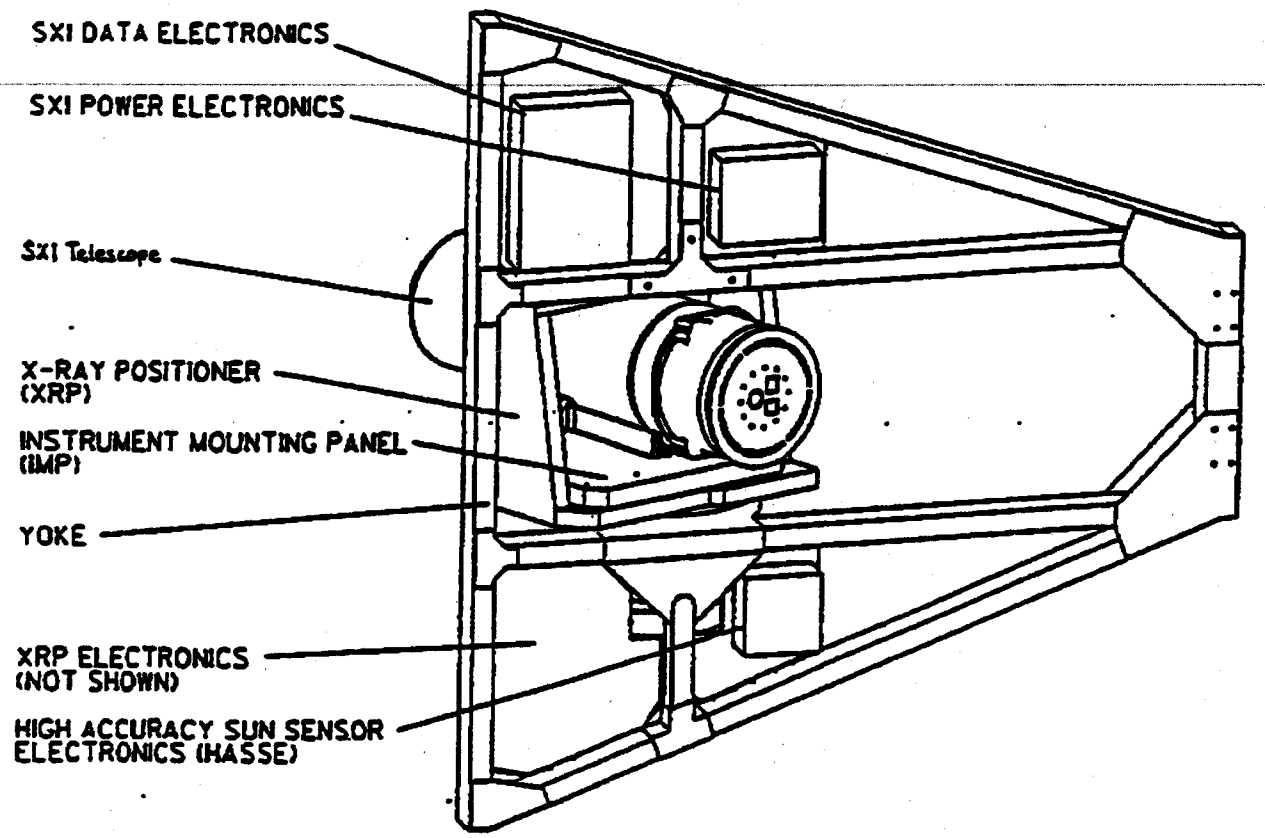


Figure 4-4: Accommodation of SXI on GOES-M

# Appendix A
# Detailed GOES-M/SXI Electrical Interface Diagrams

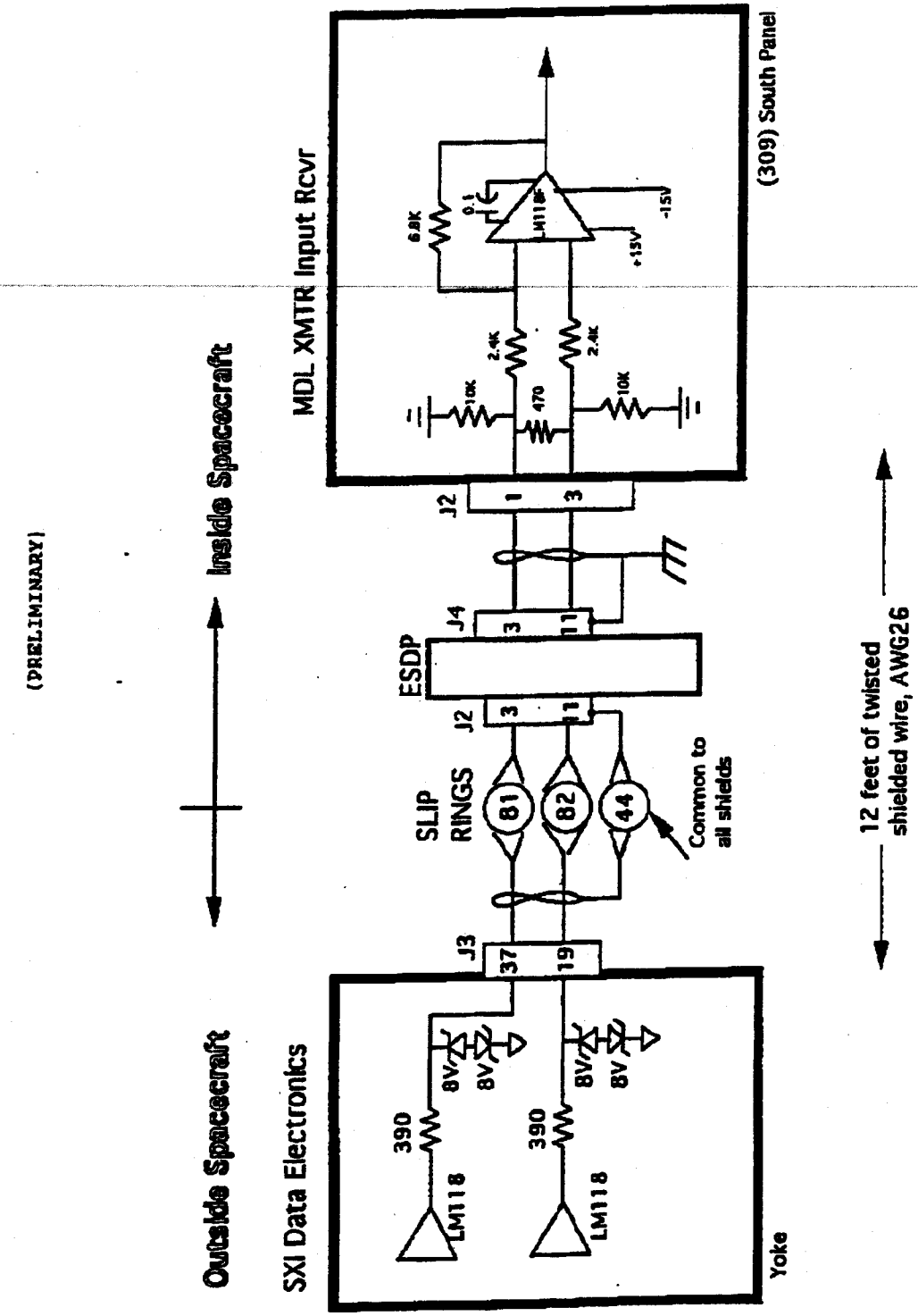


Figure A1: SXI Output Data Communications Interface

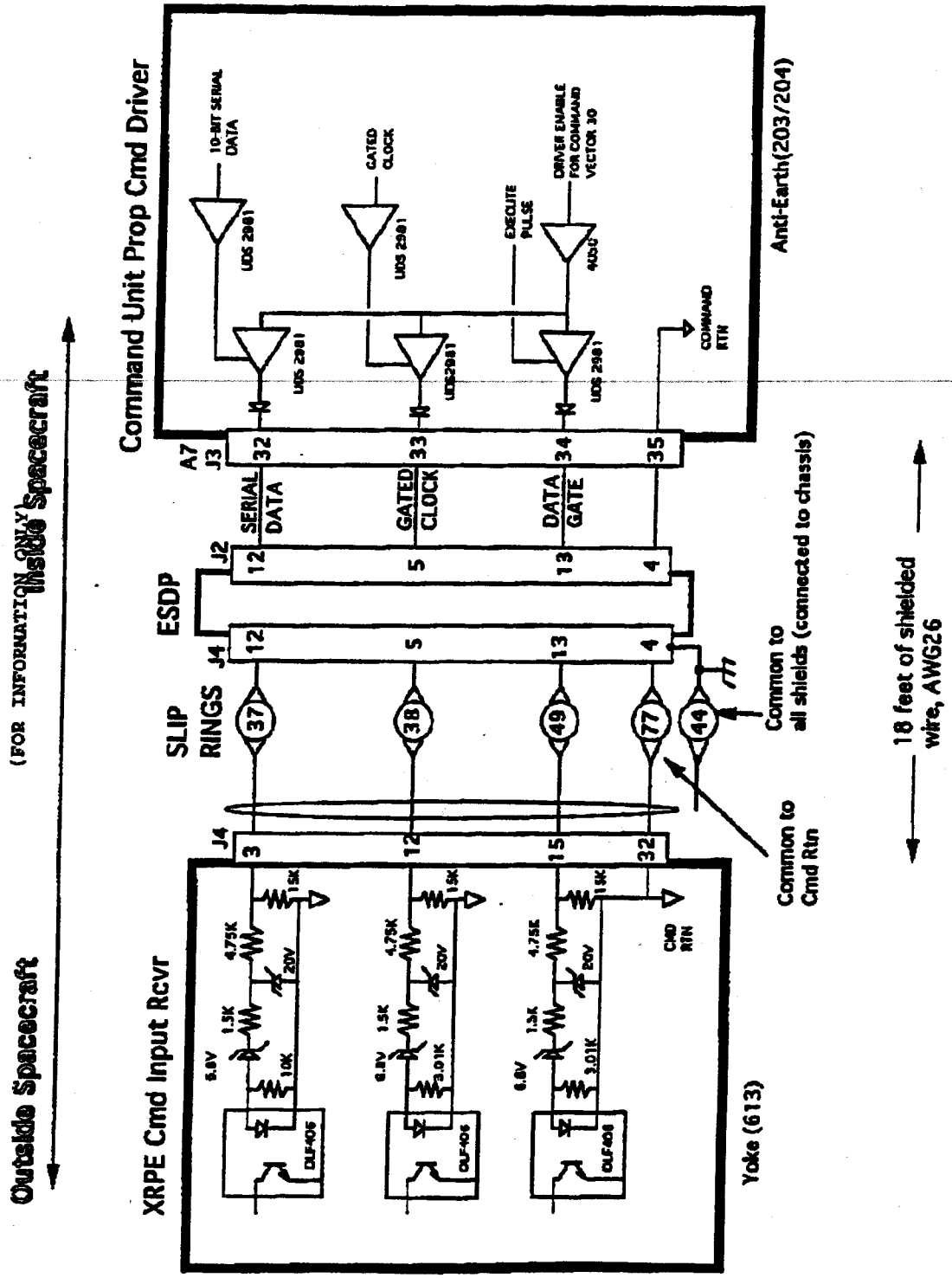


Figure A2: Proportional Command Interface for XRPE

(PRELIMINARY)

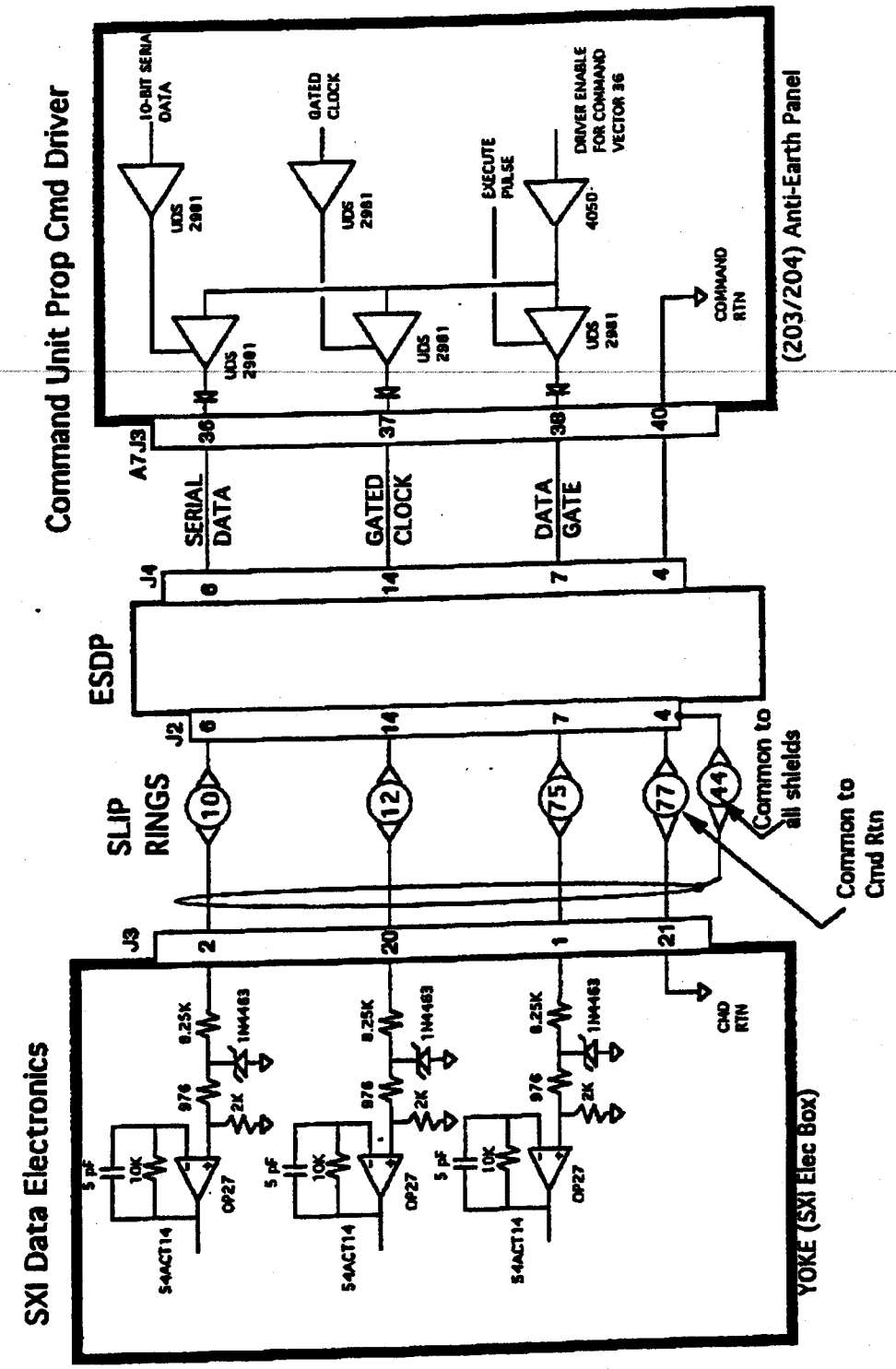


Figure A3: SXI Proportional Command Interface

(PRELIMINARY)

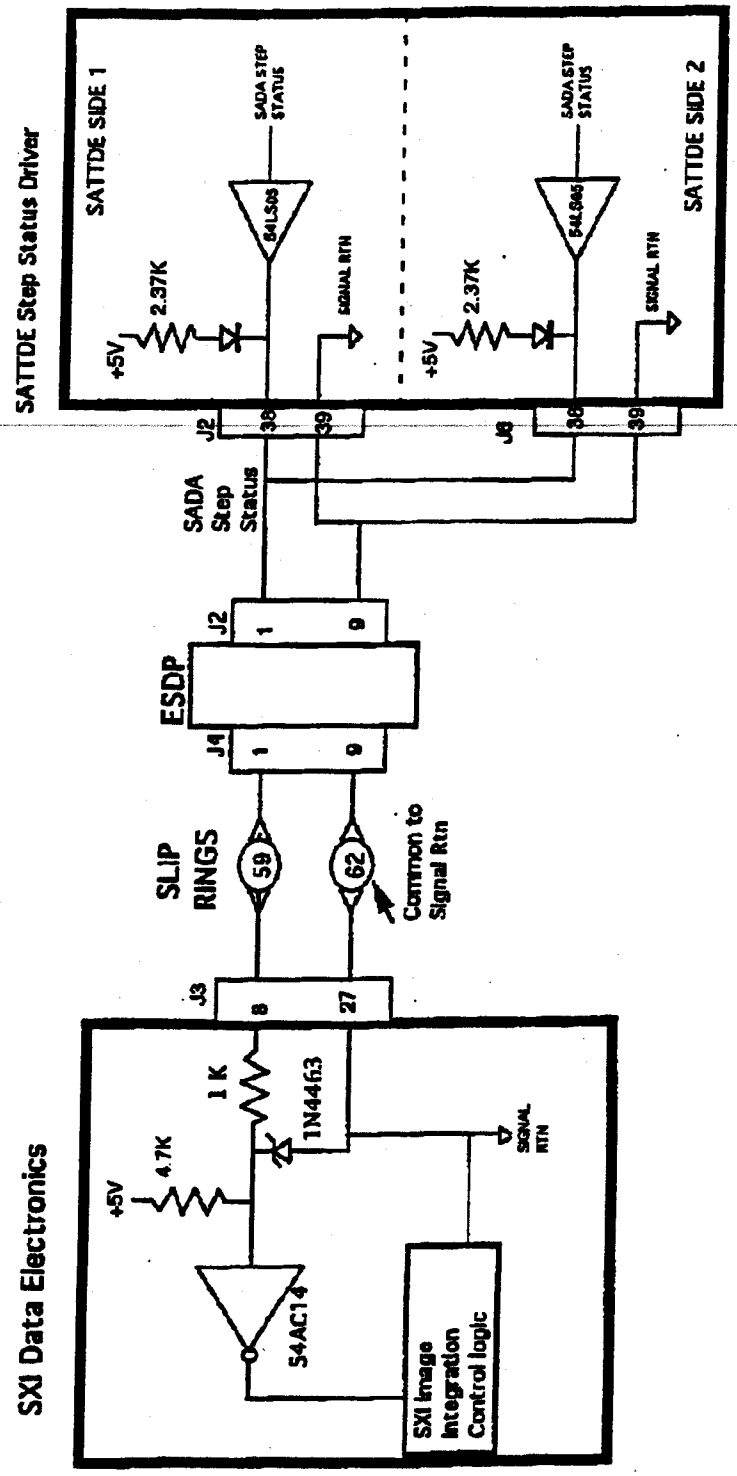


Figure A4: Solar Array Drive Assembly Step Status Interface

(PRELIMINARY)

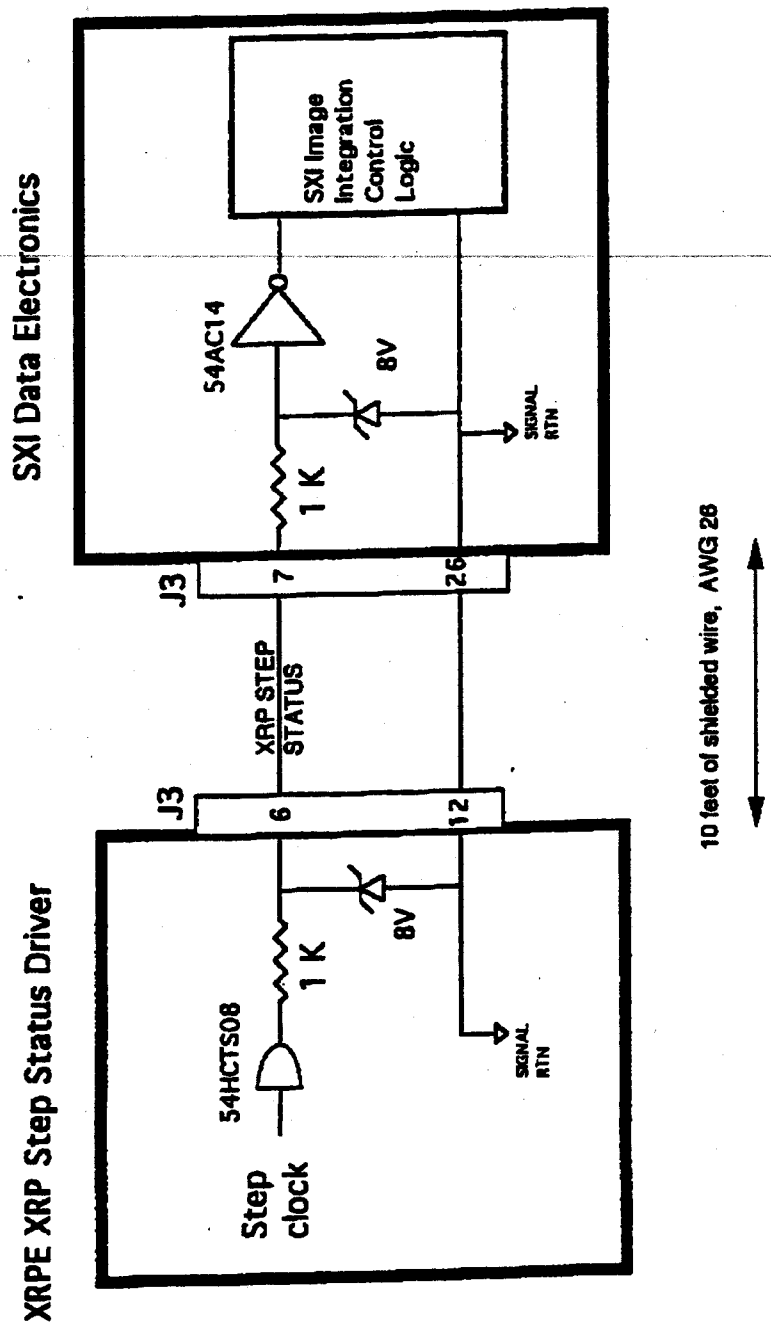


Figure A5: X-ray Positioner Step Status Interface

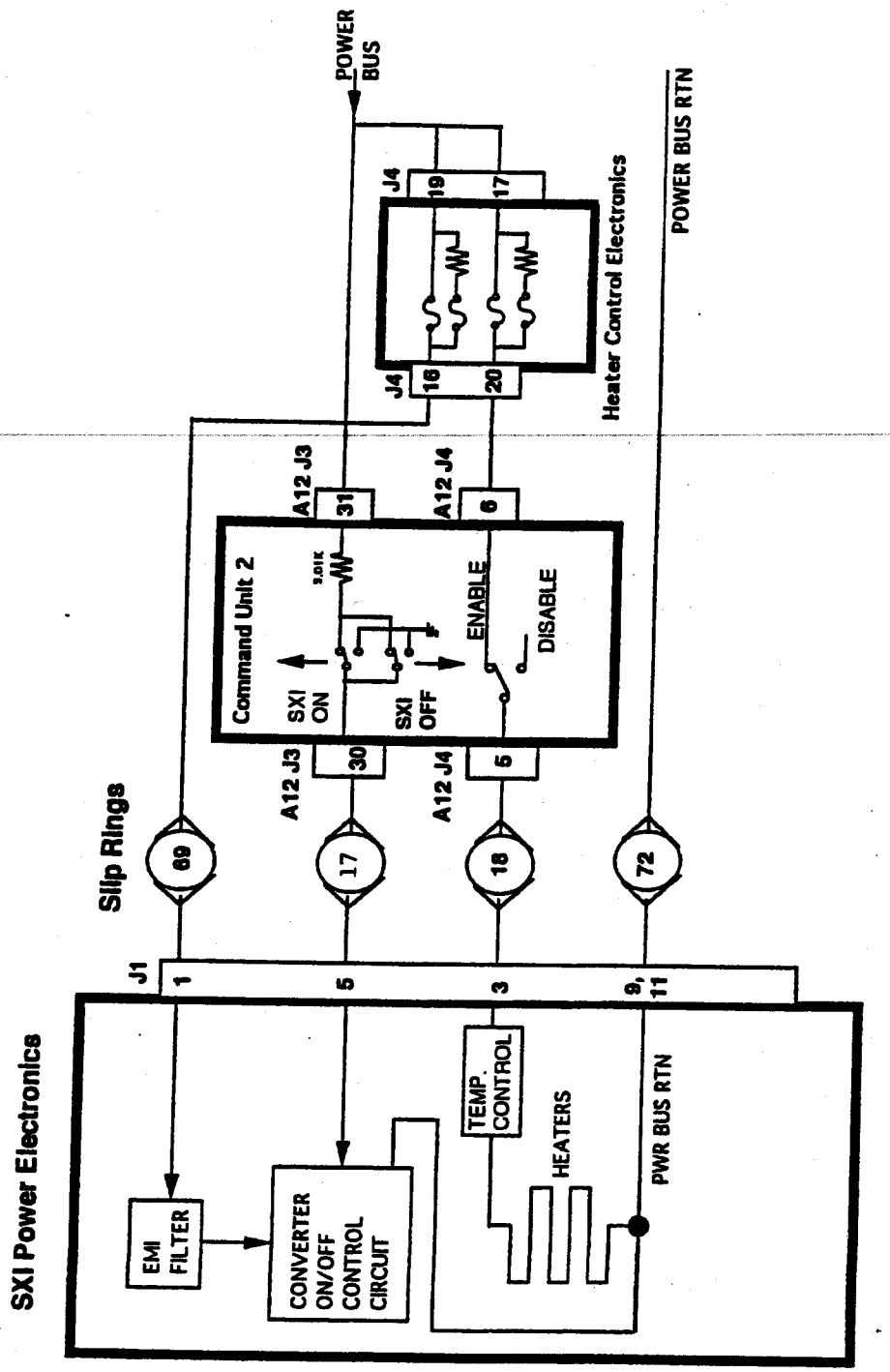


Figure A-6: Primary Power, Heater, and DC/DC Converter Interface

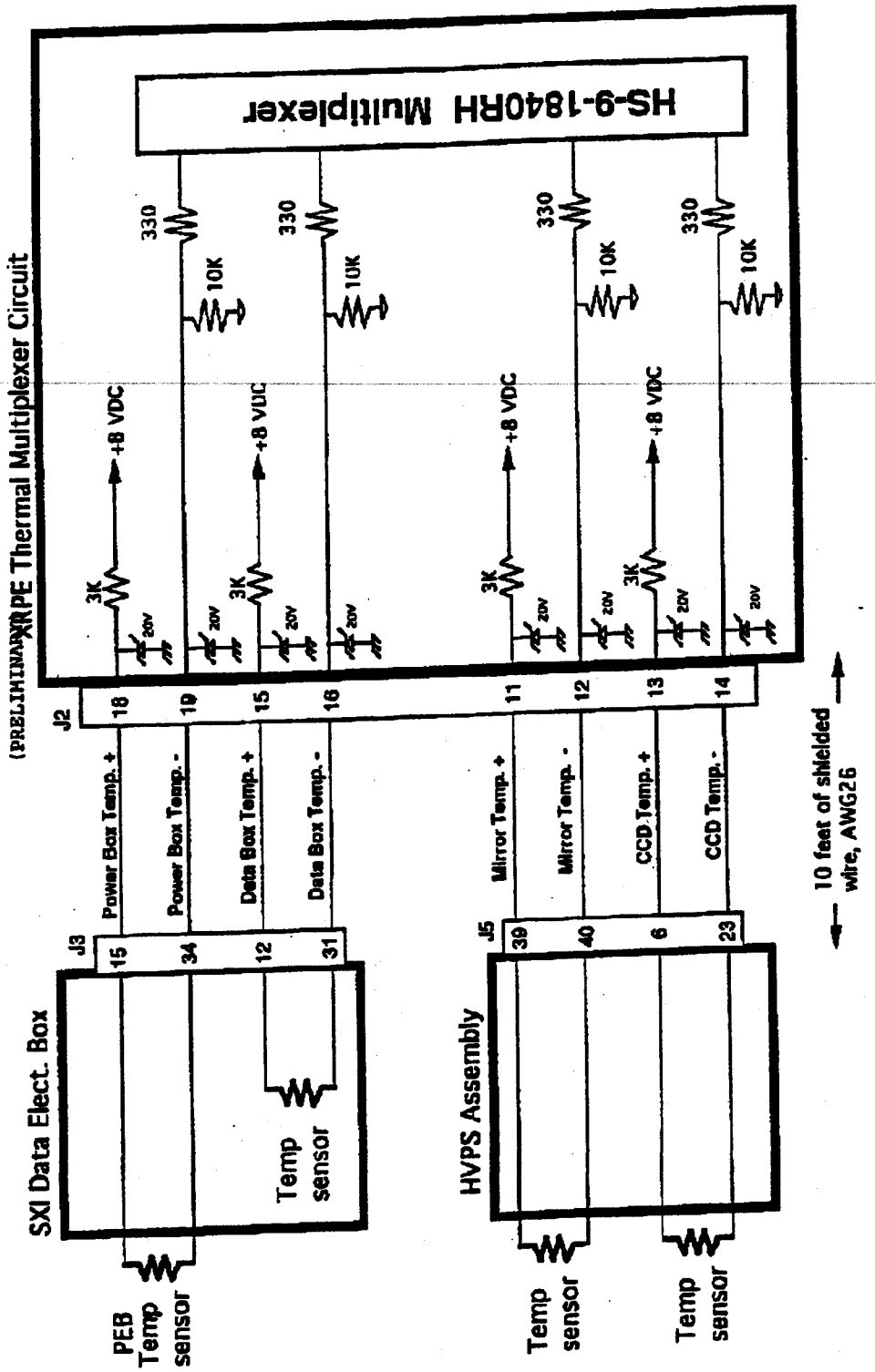


Figure A7: Temperature Sensor Telemetry Interface

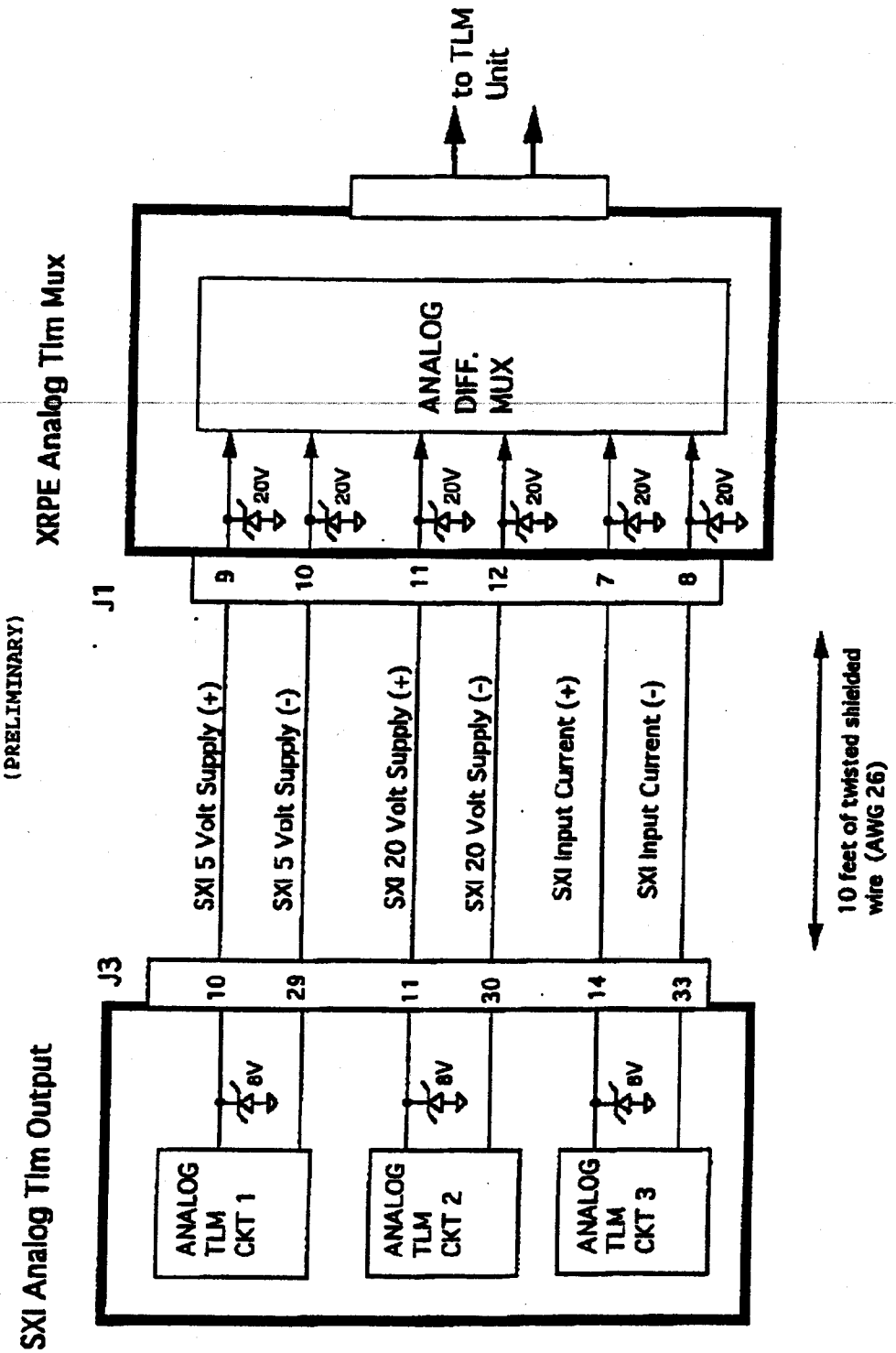


Figure A8: Analog Telemetry Interface

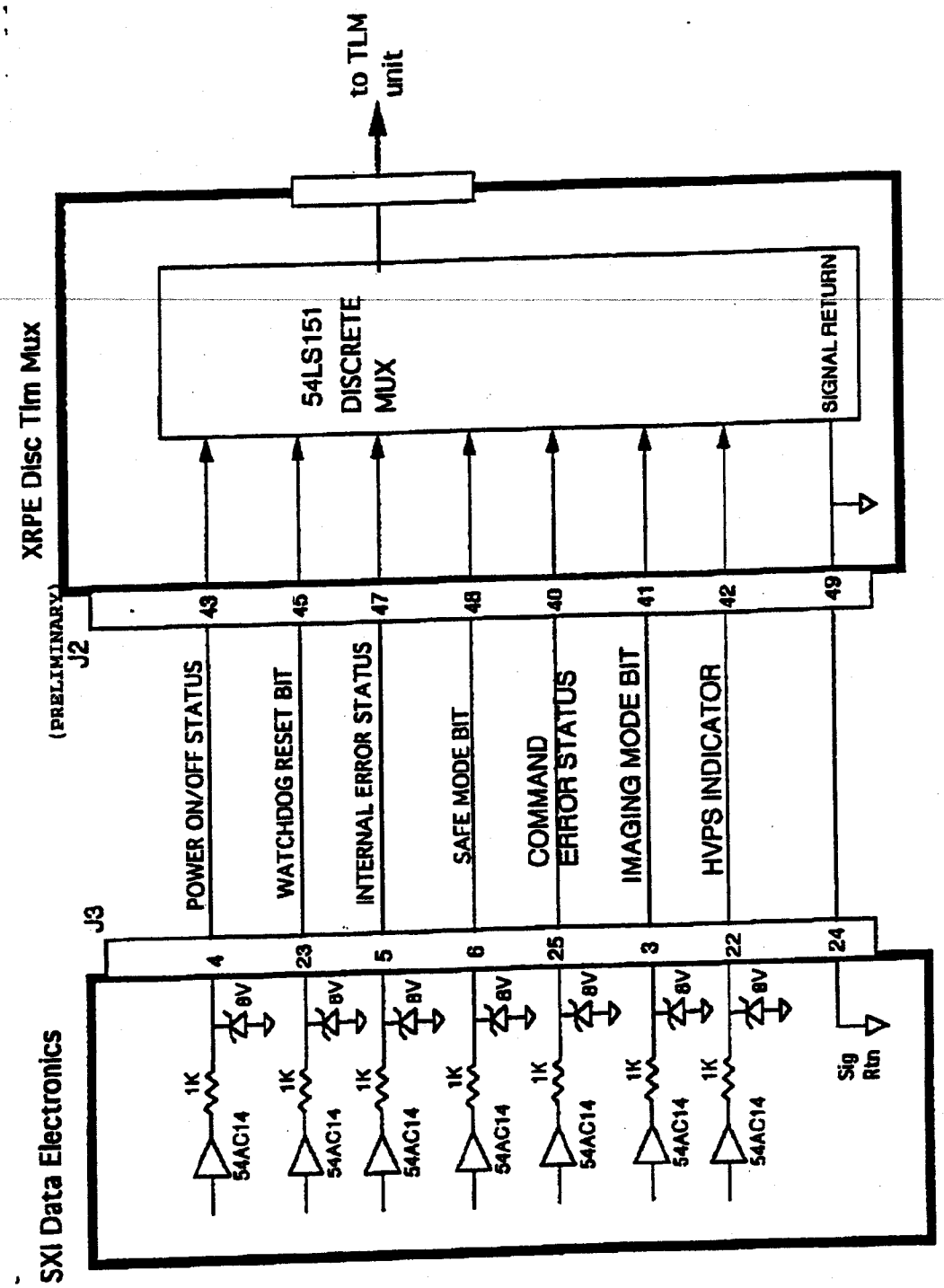


Figure A-9: Discrete Telemetry Interface

# Appendix B
# SXI Telemetry and Command List

Table B-1 SXI Analog Telemetry

| PARAMETER | SAMPLING RATE (Seconds) | TLM CHANNELS |
|---|---|---|
| SXI +5 V Power Supply Voltage | 16 | TBD |
| SXI +20 V Power Supply Voltage | 16 | TBD |
| SXI Input Current | 16 | TBD |

Table B-2 SXI Discrete (Type A) Telemetry

| PARAMETER | SAMPLING RATE (Seconds) | TLM CHANNELS |
|---|---|---|
| SXI Internal Error Detect | 8 | TBD |
| SXI Command Error Detect | 8 | TBD |
| SXI Active Imaging Mode | 8 | TBD |
| SXI Power On | 8 | TBD |
| SADA Step Added | 0.5 | TBD |
| SADA Step Subtracted | 0.5 | TBD |
| SXI Heater Enable/Disable Status | 4 | TBD |

Table B-3 SXI Temperature Telemetry

| PARAMETER | SAMPLING RATE (Seconds) | TLM CHANNELS |
|---|---|---|
| Mirror Temperature | 60 | TBD |
| CCD Temperature | 60 | TBD |
| DEB Temperature | 60 | TBD |
| PEB Temperature | 60 | TBD |

Table B-4 Serial Telemetry

| PARAMETER | NUMBER OF BITS | SAMPLING RATE (Second) | Interface |
|---|---|---|---|
| HASS Measurement | 32 | 30 | Data, Gate & Clock |
| Commandable States (TBD) | 1-16 | 30 | Data, Gate & Clock |

Table B-5 Command Signals Required for SXI Implementation*

| PARAMETER | SAMPLING RATE (Seconds) | Interface |
|---|---|---|
| Proportional Command to SXI | 16 Bits Serial | Data, Gate & Clock |

* The number of commands is to be determined by the SXI contractor

ATTACHMENT F

S-415-21, Rev. A

# WORK BREAKDOWN STRUCTURE (WBS) DICTIONARY FOR THE GOES NO/PQ SOLAR X-RAY IMAGER (SXI)

January 5, 1998

NASA/GODDARD SPACE FLIGHT CENTER
GREENBELT, MARYLAND 20771

To verify this document is the current version, contact the GOES Project Library

ATTACHMENT F

S-415-21, Rev. A

# WORK BREAKDOWN STRUCTURE (WBS) DICTIONARY FOR THE GOES NO/PQ SOLAR X-RAY IMAGER (SXI)

January 5, 1998

NASA/GODDARD SPACE FLIGHT CENTER
GREENBELT, MARYLAND 20771

To verify this document is the current version, contact the GOES Project Library

PREPARED BY: Sandra A. Cauffman
SXI Technical Officer — 1/6/98 Date

APPROVED BY: Patricia A. Huber
GOES Flight Assurance Manager — 1/7/98 Date

Robert W. Ross
Instrument Systems Manager — 1/7/98 Date

Ronald J. Hooker
NOAA Liaison Office — 1/6/98 Date

Martin A. Davis
GOES Project Manager — 1/7/98 Date

ATTACHMENT F

S-415-21, Rev. A

# CHANGE RECORD

| Revision | Contract Mod. | Reason for Change | Affected Page(s) |
|---|---|---|---|
| Rev. A | | WBS was modified to facilitate tracking of costs and schedules | Multi |
| | | | |
| | | | |
| | | | |
| | | | |
| | | | |
| | | | |
| | | | |
| | | | |
| | | | |
| | | | |
| | | | |
| | | | |
| | | | |
| | | | |
| | | | |
| | | | |
| | | | |
| | | | |
| | | | |
| | | | |
| | | | |

## TABLE OF CONTENTS

1. PROGRAM MANAGEMENT ..... 1

1.1. PROJECT MANAGEMENT OFFICE ..... 1

1.2. RESOURCE MANAGEMENT ..... 1

1.3. CONFIGURATION AND INFORMATION MANAGEMENT ..... 2

1.4. PROGRAM REVIEWS ..... 2

1.5. SPECIAL ENGINEERING/ANALYSIS ..... 2

2. SYSTEMS ENGINEERING ..... 3

2.1. SYSTEMS MANAGEMENT AND ENGINEERING ..... 3

2.2. SPACECRAFT INTERFACE AND ACCOMMODATION ..... 3

2.3. SYSTEM ANALYSIS AND ALLOCATIONS ..... 4

2.4. CONTAMINATION CONTROL AND ANALYSIS ..... 4

2.5. PERFORMANCE VERIFICATION ..... 4

3. MISSION ASSURANCE ..... 6

3.1. MANAGEMENT ..... 6

3.2. INSTRUMENT PERFORMANCE ASSURANCE ..... 6

3.3. GROUND SYSTEMS PERFORMANCE ASSURANCE ..... 6

4. GROUND SYSTEMS ..... 7

4.1. INSTRUMENT GROUND SUPPORT EQUIPMENT ..... 7

4.2. SIMULATORS ..... 7

4.3. EGSE INTERFACE DEFINITION ..... 7

4.4. COMPATIBILITY VERIFICATION ..... 8

4.5. FLIGHT SOFTWARE DEVELOPMENT SYSTEM ..... 8

4.6. MECHANICAL GROUND SUPPORT EQUIPMENT ..... 8

5. SXI STRUCTURAL MODEL AND MASS MODEL ..... 9

5.1. INSTRUMENT DESIGN AND ANALYSIS ..... 9
5.1.1. OBJECTIVE GROUP ..... 9
5.1.2. FOCAL PLANE GROUP ..... 9
5.1.3. METERING TUBE GROUP ..... 9
5.1.4. THERMAL SUBSYSTEM ..... 10
5.1.5. DATA ELECTRONICS MASS SIMULATOR ..... 10
5.1.6. POWER ELECTRONICS MASS SIMULATOR ..... 10
5.1.7. CABLES MASS SIMULATOR ..... 10
5.1.8. HASS ELECTRONICS MASS SIMULATOR ..... 10
5.1.9. SXI INSTRUMENT ..... 10

5.2. STRUCTURAL MODEL FABRICATION, TESTING AND ASSEMBLY ..... 11
5.2.1. OBJECTIVE GROUP ..... 11
5.2.2. FOCAL PLANE GROUP ..... 11
5.2.3. METERING TUBE GROUP ..... 11

5.3. STRUCTURAL MODEL INTEGRATION AND TEST ..... 11
5.3.1. SM INSTRUMENT INTEGRATION AND CHECKOUT ..... 11
5.3.2. ENVIRONMENTAL TESTING ..... 12

5.4. MASS MODEL FABRICATION, TESTING AND ASSEMBLY ..... 12
5.4.1. OBJECTIVE GROUP ..... 12
5.4.2. FOCAL PLANE GROUP ..... 12
5.4.3. METERING TUBE GROUP ..... 12
5.4.4. THERMAL SUBSYSTEM ..... 12
5.4.5. DATA ELECTRONICS MASS SIMULATOR ..... 12
5.4.6. POWER ELECTRONICS MASS SIMULATOR ..... 13
5.4.7. CABLES MASS SIMULATOR ..... 13
5.4.8. HASS ELECTRONICS MASS SIMULATOR ..... 13

5.5. MASS MODEL INTEGRATION AND TEST ..... 13
5.5.1. MM INSTRUMENT INTEGRATION AND CHECKOUT ..... 13
5.5.2. MM TRANSPORTATION AND HANDLING ..... 13

5.6. OBSERVATORY SITE SUPPORT ..... 14
5.6.1. OBSERVATORY INTEGRATION AND TEST SUPPORT ..... 14

6. SXI ENGINEERING MODEL ..... 14

6.1. INSTRUMENT DESIGN AND ANALYSIS ..... 14
6.1.1. OBJECTIVE GROUP ..... 14
6.1.2. FOCAL PLANE GROUP ..... 14
6.1.3. METERING TUBE GROUP ..... 15
6.1.4. THERMAL SUBSYSTEM ..... 15
6.1.5. DATA ELECTRONICS ..... 15
6.1.6. POWER ELECTRONICS ..... 15
6.1.7. CABLES ..... 16
6.1.8. SOFTWARE ..... 16
6.1.9. SXI INSTRUMENT ..... 16

6.2. INSTRUMENT FABRICATION, TESTING AND ASSEMBLY ..... 16
6.2.1. OBJECTIVE GROUP ..... 16
6.2.2. FOCAL PLANE GROUP ..... 17
6.2.3. METERING TUBE GROUP ..... 17
6.2.4. THERMAL SUBSYSTEM ..... 17
6.2.5. DATA ELECTRONICS ..... 17
6.2.6. POWER ELECTRONICS ..... 18
6.2.7. CABLES ..... 18
6.2.8. SOFTWARE ..... 18
6.2.9. EM ELECTRONICS PARTS PROCUREMENT ..... 18

6.3. EM INSTRUMENT INTEGRATION AND TEST ..... 18
6.3.1. EM INSTRUMENT INTEGRATION AND CHECKOUT ..... 19
6.3.2. ENVIRONMENTAL TESTING ..... 19
6.3.3. CALIBRATION ..... 19
6.3.4. TRANSPORTATION AND HANDLING ..... 20
6.3.5. STORAGE AND REFURBISHMENT ..... 20

6.4. OBSERVATORY SITE SUPPORT ..... 20
6.4.1. OBSERVATORY INTEGRATION AND TEST SUPPORT ..... 20

7. SXI-001 ..... 20

7.1. INSTRUMENT DESIGN AND ANALYSIS ..... 20

7.2. INSTRUMENT FABRICATION, TESTING AND ASSEMBLY ..... 21
7.2.1. OBJECTIVE GROUP ..... 21
7.2.2. FOCAL PLANE GROUP ..... 21
7.2.3. METERING TUBE GROUP ..... 21
7.2.4. THERMAL SUBSYSTEM ..... 22
7.2.5. DATA ELECTRONICS ..... 22
7.2.6. POWER ELECTRONICS ..... 22
7.2.7. CABLES ..... 22
7.2.8. SOFTWARE ..... 22
7.2.9. FLIGHT ELECTRONICS PARTS PROCUREMENT ..... 23

7.3. INSTRUMENT INTEGRATION AND TEST ..... 23
7.3.1. INSTRUMENT INTEGRATION AND CHECKOUT ..... 23
7.3.2. ENVIRONMENTAL TESTING ..... 23
7.3.3. CALIBRATION ..... 24
7.3.4. TRANSPORTATION AND HANDLING ..... 24
7.3.5. STORAGE AND REFURBISHMENT ..... 24

7.4. OBSERVATORY/LAUNCH SITE SUPPORT ..... 24
7.4.1. OBSERVATORY INTEGRATION AND TEST SUPPORT ..... 24
7.4.2. LAUNCH SITE SUPPORT ..... 25
7.4.3. MISSION OPERATIONS SUPPORT ..... 25

8. SXI-002 ..... 26

9. SXI-003 (OPTION 1) ..... 26

10. SXI-004 (OPTION 2) ..... 26

# 1. PROGRAM MANAGEMENT

This element includes those efforts required for the monitoring, control, administration, and direction of the SXI Project. It has programmatic authority over, and responsibility for, all of the other WBS elements listed here or as may be assigned hereafter to this program.

## 1.1. PROJECT MANAGEMENT OFFICE

This element includes those efforts required for the management of the SXI Project. This includes the office of the SXI Project Manager, and consists of the Project Manager and his/her staff. The Project Manager is responsible for the leadership and overall direction of the GOES-N, O, P, Q Program.

This element includes those efforts needed to review and approve all Project Management deliverable/non-deliverable plans and documentation.

## 1.2. RESOURCE MANAGEMENT

This element includes all effort required to establish, implement, and maintain a comprehensive resource management system for planning, authorizing, and controlling the total resources effort for each task and for providing timely and adequate visibility into manpower, cost, and schedule status of the contract. Included in this element are: life cycle and cost analysis, development of budgets, funding plans, work authorization documents, administration of management reserve, and status reporting.

This element includes the efforts necessary to establish facilities required for development and testing such as: clean rooms, thermal vacuum chambers, thermal cycle chambers, vibration facilities, and instrument storage facilities.

This element includes those efforts required for the management, administration, control, and maintenance of the SXI project integrated scheduling system.

This element also includes those efforts for monitoring and control of the SXI prime contract with the Government to ensure compliance with all contractual requirements. This includes all functional and administrative support of the contractual interfaces with the Government and with other segments of the contractor's organization. In addition, this element includes those efforts required for the monitoring, control, execution, and administration of all SXI project subcontracts.

This element includes those efforts needed to develop all Resource Management deliverable/non-deliverable plans and reports.

This element includes all travel expenses (air fare, car rental, living expenses, etc.) associated with the SXI Project.

## 1.3. CONFIGURATION AND INFORMATION MANAGEMENT

This element includes those efforts required for the Configuration Control and management functions for the entire SXI project as documented in a Configuration Management Requirements. This includes Configuration Control Board meetings and the management, administration, control, and maintenance of the Configuration Control Program. This includes the responsibility for the control, management, processing, and tracking of all requests for waivers, deviations, and Engineering Change Proposals.

This element also includes those efforts required for the management, control, coordination, and distribution of all documentation required to fulfill the contractual requirements of the SXI Contract Data Requirements List (CDRL) and other documentation imposed by SXI project requirements.

This element includes those efforts needed to develop all Documentation Management deliverable/non-deliverable plans.

## 1.4. PROGRAM REVIEWS

This element includes those efforts necessary for preparation, conduct, and documentation of program reviews, audits, and meetings. This element includes those efforts needed to develop all program reviews deliverable/non-deliverable documentation.

## 1.5. SPECIAL ENGINEERING/ANALYSIS

This element includes tasks relating to the development, implementation, and operation of the SXI instruments, and ground systems as required and authorized by the government. This element includes those efforts needed to develop all Special Engineering/Analysis deliverable/non-deliverable documentation.

## 2. SYSTEMS ENGINEERING

This element includes those efforts required for directing, specifying, and overseeing the design and technical development of the SXI instrument and the required ground systems to ensure compliance with the Requirements Document, S-415-17 and the Interface Requirements Document, S-415-18. It addresses the design of the integrated system and the control and planning of the associated technical effort. These efforts include requirements analysis, risk management, development of the SXI Design Specification derived from the NASA requirements, generation of the instrument design, the ground system design, launch support, and the development and planning of the component, instrument, and integrated system test program. This element also includes those efforts required in the support and generation of documentation and reviews.

### 2.1. SYSTEMS MANAGEMENT AND ENGINEERING

This element includes those efforts required for providing technical direction, oversight, and technical resources allocation for the total SXI project, including the instrument design, development, manufacture, and ground system design. Systems Engineering management includes the project Systems Engineering Manager and his/her staff. This element also includes the effort required to perform all SXI system studies, trades, and risk assessments necessary to develop a cost effective design for the SXI instrument. This element includes those efforts needed to review and approve all Systems Engineering deliverable/non-deliverable plans, analyses, and documentation.

This element also includes those efforts required for the functional design and development of the instrument. It addresses the total instrument design including performance margins and design approaches to assure achievement of the requires instrument life, instrument operational requirements, design integrity, subsystem and system compatibility, reliability and maintainability, producibility, safety, survivability, training, and testability. This element also oversees all of the work associated with the development of the spacecraft interfaces, electrical and mechanical ground support equipment and simulators. In addition, this element includes those efforts needed to develop and maintain software standards and procedures. It also includes all design audits associated with the instrument. This element also includes those efforts needed to develop all instrument system engineering deliverable/non-deliverable documentation.

### 2.2. SPACECRAFT INTERFACE AND ACCOMMODATION

This element includes the systems analysis and engineering required to establish and generate Interface Control Documents (ICDs) for the Solar X-ray Imager and the ground support equipment. This element also includes the coordination effort required by the instrument contractor to receive ICD concurrence from GSFC and the spacecraft contractor.

This element includes those efforts required for system engineering of the SXI instrument interface with the SOCC, SEC and spacecraft ground system. This includes the generation of ICDs for interfaces to the ground system as driven by the SXI instrument design. This encompasses any changes to ground system interfaces with intermediate and radio frequency equipment, command encryption equipment, instrument simulators, or other elements of the instrument support ground system. This element also includes the

coordination effort required by the instrument contractor to receive ICD concurrence from GSFC and NOAA.

This element includes those efforts needed to develop and maintain all Interface Definition, Verification and Control deliverable/non-deliverable documentation.

## 2.3. SYSTEM ANALYSIS AND ALLOCATIONS

This element includes those efforts required for the system engineering, analysis, and simulations efforts required for the development of the top level SXI instruments specifications and the verification of performance requirements allocated to the spacecraft and the ground system. It includes the development and verification of the SXI instrument operations concepts and the launch-to-orbit and on-orbit mission analyses. It involves the analysis required to confirm the integrity of the SXI instrument design to ensure the performance requirements of the applicable specifications will be met over the instrument operational design life. It also includes the analysis required to verify that the instrument is compatible with the spacecraft and that instrument performance specifications can be achieved by interface design. It further involves the systems analysis and engineering required to develop and maintain the SXI Instrument Design Specification and the Ground System Specifications.

This element also includes the effort required to establish, maintain, and control budgets for all relevant SXI instrument resources. This element includes, but shall not necessarily be limited to, mass properties, power, RF links, alignment, pointing, contamination and on-board processor resources (e.g. memory, throughput, etc.).

This element includes those efforts needed to develop and maintain all requirements Analyses and Allocations deliverable/non-deliverable documentation.

## 2.4. CONTAMINATION CONTROL AND ANALYSIS

This element includes those efforts required to provide all necessary subsystem management and engineering functions to design, model, test and analyze the SXI Contamination Control Subsystem. This Subsystem is the process of defining the methods and procedures to be followed to achieve adequate cleanliness and Contamination Control for the instrument with respect to the instrument performance requirements. This element includes the efforts required for subsystem design, analysis reviews and audits. In addition, this element includes those efforts needed to develop all Contamination Control Subsystem design and analysis deliverables/non-deliverables.

This element includes those efforts required to assure that appropriate contamination control is maintained through all phases of integration and test of the SXI.

This element includes those efforts required all cleaning that is required to maintain contamination at defined levels and shall support periodic reporting of contamination activities against the approved Contamination Control Plan as detailed in the CDRL #0-07.

## 2.5. PERFORMANCE VERIFICATION

This element includes those efforts required to develop all necessary plans and perform necessary analyses to verify that the SXI instrument meets all requirements. This includes those efforts needed to plan, develop, review, approve, and maintain a verification test plan.

In addition, it includes the systems oversight and concurrence for developing the test procedures and analyzing results for the components, subsystems, spacecraft, ground system, and on-orbit tests. This element includes those efforts required for Design and Performance Verification reviews, audits, and deliverable/non-deliverable documentation.

## 3. MISSION ASSURANCE

This element includes those efforts required to develop and implement performance assurance requirements and the SXI Performance Assurance program, and ensure that the SXI is developed, designed, manufactured, and tested in accordance with required performance assurance requirements and plans. This element also includes those efforts required in the support and generation of documentation and reviews.

### 3.1. MANAGEMENT

This element includes the effort required to provide all necessary management functions to support all efforts associated with performance assurance activities associated with SXI This element includes those efforts needed to review and approve all Performance Assurance procedures, deliverables, and non-deliverables.

### 3.2. INSTRUMENT PERFORMANCE ASSURANCE

This element includes those efforts required for functional Performance Engineering and inspection activities necessary. These efforts include the development, implementation, and maintenance of a program for parts, processes and materials, reliability, quality assurance, safety, and software assurance. This element includes those efforts needed to develop and maintain all Instrument Performance Assurance implementation procedures, deliverables, and non-deliverables.

### 3.3. GROUND SYSTEMS PERFORMANCE ASSURANCE

This element includes those efforts required for the functional Performance Assurance engineering and inspection activities necessary. These efforts include the development, implementation, and maintenance of a program for quality assurance, safety, and reliability. This element includes those efforts needed to develop and maintain all Ground System Performance Assurance implementation procedures, deliverables, and non-deliverables.

## 4. GROUND SYSTEMS

This element includes those efforts required to provide all necessary subsystem management and engineering functions to design, fabricate, assemble, test and analyze all the SXI Ground Support Equipment. This includes the effort to design, develop, verify, validate, test, control the configuration, assure the quality and maintain all aspects of the ground test software. This element includes development of the ground support equipment (GSE). This element includes the efforts required for subsystem design and analysis reviews and audits. In addition, this element includes those efforts needed to develop all Ground Support Equipment Subsystem design and analysis deliverables/non-deliverables. This element include NOAA SOCC, NOAA SEC, Wallops CDA, spacecraft, and instrument ground systems equipment and related engineering and management.

### 4.1. INSTRUMENT GROUND SUPPORT EQUIPMENT

This element includes those efforts required to provide all necessary subsystem management and engineering functions to design and analyze all the SXI Electrical Ground Support Equipment. This includes ground test software. This element includes development of the electrical ground support equipment (GSE). This element includes the efforts required for subsystem design and analysis reviews and audits. This element includes the development and presentation of hardware and software training courses on ground support equipment. In addition, this element includes those efforts needed to develop all Ground Support Equipment Subsystem design, analysis, and training deliverables/non-deliverables documentation.

This element does not include GSE used to test individual subsystems. If the GSE used to test individual subsystems is needed at the system level, the particular GSE will be provided by the subsystem and the cost for providing it should be at each subsystem WBS item to avoid costing them twice.

### 4.2. SIMULATORS

This element includes those efforts required to provide all necessary subsystem management and engineering functions to design, develop, implement and analyze an SXI software Simulator and a spacecraft software simulator. It also includes all of the hardware necessary to run the software. The simulators will be used to test the SXI and the S/C electrical ground support equipment prior to system integration, spacecraft testing, support integration and compatibility activities with NOAA SOCC, NOAA SEC and Wallops CDA ground system, provide spacecraft operator training, training for launch operations, and spacecraft revision testing. This element includes the development and presentation of hardware and software training courses on the instrument simulators. This element includes the efforts required for subsystem design and analysis reviews and audits. In addition, this element includes those efforts needed to develop all SXI simulator design, analysis and training deliverables/non-deliverables.

### 4.3. EGSE INTERFACE DEFINITION

This element includes those efforts required to provide all necessary subsystem management and engineering functions to design and analyze all the SXI Electrical Ground Support Equipment interface with the spacecraft ground equipment, NOAA SOCC, Wallops CDA and Space Environment Center (SEC). This includes ground test software.

This element includes the efforts required for subsystem design and analysis reviews and audits. In addition, this element includes those efforts needed to develop all Ground Support Equipment Subsystem design and analysis deliverables/non-deliverables.

### 4.4. COMPATIBILITY VERIFICATION

This element contains all implementation, integration, verification, and test activities related to all electrical ground systems hardware and software. This element includes those efforts needed to develop all Integration Verification and Test procedures, deliverables, and non-deliverables related to electrical ground systems compatibility with the spacecraft GSE, SOCC, CDA and SEC.

### 4.5. FLIGHT SOFTWARE DEVELOPMENT SYSTEM

This element contains the design, development implementation and maintenance of the SXI Flight Software Development System. It is planned that this will be largely based on COTS hardware and software.

### 4.6. MECHANICAL GROUND SUPPORT EQUIPMENT

This element contains the design, development implementation and maintenance of the SXI Mechanical Ground Support Equipment (MGSE). The MGSE includes but is not limited to Lifting Fixtures, Shipping & Storage Containers, Drill Templates, Assembly Jigs, and Purge Equipment.

# 5. SXI STRUCTURAL MODEL AND MASS MODEL

## 5.1. INSTRUMENT DESIGN AND ANALYSIS

This element includes the effort required to provide all management functions necessary to support efforts associated with the subsystem development, design and analysis activities for SXI structural model (SM) and mass model (MM). In addition, this element includes those efforts needed to review and approve all subsystem design and analysis deliverables/non-deliverables.

This element includes the effort required to furnish all necessary personnel, facilities, services, and materials to support subsystem development, design and analysis for the SXI structural model and mass model.

The structural model is designed and built only for the SXI Telescope and is used to verify the telescope structural design and to determine the loads that the key subassemblies will see during the vibration testing. The design of the structural elements of the SM are nearly identical to those of the engineering and flight models. The intent is that the SM design is as close to the final design as possible and the engineering and flight structure designs will be updates that are modified only as necessary to incorporate changes found to be necessary after the SM is built.

### 5.1.1. Objective Group

This element includes those efforts required to provide all necessary subsystem management and engineering functions to develop, design and analyze the SXI Objective Group. The Objective Group consists of all the parts of the telescope that are mounted on the front end of the metering tube. It includes the X-Ray Mirror, High Accuracy Sun Sensor (HASS), aliveness source, entrance filter, and structural elements. The SM will use a simplified mass model of the HASS and aliveness source, and will contain a SM Mirror that has not been figured and polished. The MM will be further simplified so that the objective group has fewer parts but will have the correct total mass and net shape.

### 5.1.2. Focal Plane Group

This element includes those efforts required to provide all necessary subsystem management and engineering functions to develop, design and analyze the SXI Focal Plane Group. The Focal Plane Group consists of all the parts of the telescope that are mounted on the rear end of the metering tube. It includes the CCD Camera, filter wheel, Filters, Shutter, and structural elements. The SM will use a simplified mass model of the CCD Camera, filter wheel, and shutter. The SM will not contain any filters. The MM will be further simplified so that the focal plane group has fewer parts but will have the correct total mass and net shape.

### 5.1.3. Metering Tube Group

This element includes those efforts required to provide all necessary subsystem management and engineering functions to develop, design and analyze the SXI Metering Tube Group. The Metering Tube Group consists of the metering tube, the telescope mount, and the rings and brackets that are attached to the metering tube.

The Metering Tube is the heart of the telescope structure and the SM Metering Tube Group will be as close as possible to the final flight design. The MM may be further simplified so that the focal plane group has fewer parts but will have the correct total mass and net shape.

### 5.1.4. Thermal Subsystem

None planned for the SM or MM.

### 5.1.5. Data Electronics Mass Simulator

This element includes those efforts required to provide all necessary subsystem management and engineering functions to develop, design and analyze the Data Electronics Mass Simulator. The Data Electronics Mass Simulator is part of the MM only (not used on the SM). It is a box of the same shape and mass as the data electronics box but it is not functional. It does contain correct connectors at the correct locations.

### 5.1.6. Power Electronics Mass Simulator

This element includes those efforts required to provide all necessary subsystem management and engineering functions to develop, design and analyze the Power Electronics Mass Simulator. The Power Electronics Mass Simulator is part of the MM only (not used on the SM). It is a box of the same shape and mass as the data electronics box but it is not functional. It does contain correct connectors at the correct locations.

### 5.1.7. Cables Mass Simulator

This element includes those efforts required to provide all necessary subsystem management and engineering functions to develop, design and analyze the Cables Mass Simulator. The Cables Mass Simulator is part of the MM only (not used on the SM). It is a non-functional cable set with the correct mass and connectors. The bundle diameter and flexibility will approximate the flight cables so that the cable mass simulator can be used to verify the cable routing.

### 5.1.8. HASS Electronics Mass Simulator

This element includes those efforts required to provide all necessary subsystem management and engineering functions to develop, design and analyze the HASS Electronics Mass Simulator. The HASS Electronics Mass Simulator is part of the MM only (not used on the SM).

### 5.1.9. SXI Instrument

This element includes those efforts required to provide all necessary subsystem management and engineering functions to develop, design and analyze the parts of SXI design that cannot be allocated to a subsystem. This element includes the SXI telescope top assembly and the SXI instrument top assembly. Other elements of the instrument design and analysis that are not part of a specific subsystem and are not part of the systems engineering task are included here.

## 5.2. STRUCTURAL MODEL FABRICATION, TESTING AND ASSEMBLY

This element includes the efforts required to furnish all the necessary personnel, facilities, services, and materials to support subsystem fabrication, assembly, and test efforts for the SXI Structural Model.

This element includes the efforts required to provide all management functions necessary to support efforts associated with the subsystem fabrication, assembly, and test activities for the SXI structural model. In addition, this element includes those efforts needed to review and approve all subsystem fabrication, assembly, test, and hardware procedures and deliverables/non-deliverables.

### 5.2.1. Objective Group

This element includes those efforts required to provide all necessary subsystem management, engineering functions, and procurements to fabricate, assemble, and test the SM SXI Objective Group.

### 5.2.2. Focal Plane Group

This element includes those efforts required to provide all necessary subsystem management, engineering functions, and procurements to fabricate, assemble, and test the SM SXI Focal Plane Group.

### 5.2.3. Metering Tube Group

This element includes those efforts required to provide all necessary subsystem management, engineering functions, and procurements to fabricate, assemble, and test the SM SXI Metering Tube Group.

## 5.3. STRUCTURAL MODEL INTEGRATION AND TEST

This element includes those efforts required for the technical direction, administration, and control of the SXI SM integration and test program. This element shall also include the development of all procedures and reports related to integration and test. In addition, this element includes those efforts needed to prepare, review and approve all Integration and Test procedures, deliverables/non-deliverables.

This element includes those efforts required for the design, development, preparation, implementation, execution, and documentation of the SXI SM integration and test. In addition, this element includes the assembly and integration of all instrument components into the complete SM. This element also includes those efforts required in the support and generation of documentation and reviews.

### 5.3.1. SM Instrument Integration And Checkout

This element includes the effort to provide all resources necessary to perform the, mechanical integration of the SXI SM instrument. This effort shall include all tasks involving mounting, alignment, and support. This element includes the effort to accommodate the SXI procedures. In addition, this element includes those efforts needed to develop all Instrument Integration and Checkout procedures and deliverables/non-deliverables.